ELIZABETH SPRINGS

AMENITY CENTER SITE PLAN

TOWN OF ROLESVILLE
WAKE COUNTY, NC

1ST SUBMITTAL: FEBUARY 4, 2020
2ND SUBMITTAL: AUGUST 27, 2020

DRAWING LIST	
C000	COVER
C101	EXISTING CONDITIONS
C300	SITE PLAN
C310	GRADING PLAN
C401	UTILITY PLAN
C450	LANDSCAPE PLAN
C801	WATER/SEWER/STORM DETAILS
C802	SITE/NCDOT DETAILS
C803	NCDOT DETAILS

PROJECT DATA	
BUILDING AREA	1,745 SQ FT
POOL AREA	2,100 SQ FT
POOL DECK AREA	5,071 SQ FT
IMPERVIOUS AREA	30,047 SQ FT

PARKING	REQUIRED	PROVIDED
REGULAR	28	28
ADA	2	2
TOTAL	28	28

* PARKING IS BASED ON ROLESVILLE UDO, 1 SPOT FOR EVERY 300 SF GROSS FLOOR AREA OF THE POOL. FOR THE CLUBHOUSE, 1 SPOT FOR EVERY 100 SF GROSS FLOOR AREA.

TRACT "A" (SINGLE FAMILY DETACHED)
NUMBER OF UNITS: 100
CLUSTER MAILBOX UNITS:
REQUIRED: 4 SPACES (79-104 DWELLING UNITS)
PROPOSED: 5 SPACES AT AMENITY CENTER

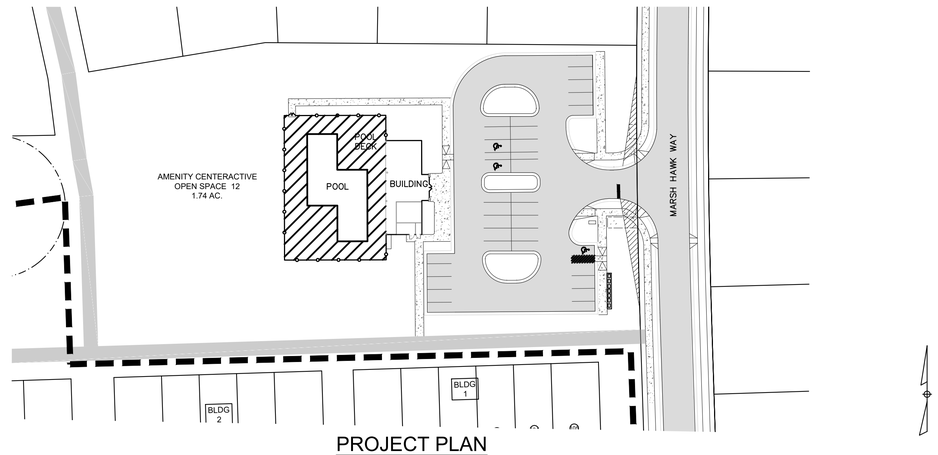

PROJECT PLAN
GRAPHIC SCALE
1 inch = 50 ft.

EXISTING TRACT DATA:

NC PIN: 1860-03-8619
DEED REFERENCE: DB 017035, PG 01542
REAL ESTATE ID: 0002813

TOTAL TRACT AREA : 82.22 AC
AREA WITHIN ROW: 0.61 AC
NEW TOAL AREA: 81.61 AC
ZONING: R & PUD, R40W
EXISTING USE: VACANT / UNDEVELOPED WOODS
TOTAL AMENITY CENTER AREA: 1.74 AC.

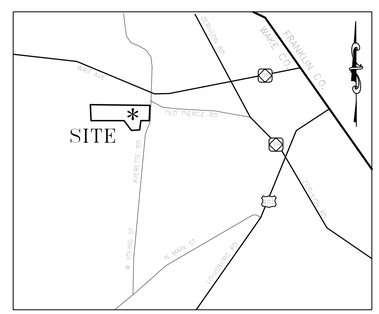

VICINITY MAP
(NTS)

EROSION CONTROL, STORMWATER AND FLOODPLAIN MANAGEMENT
APPROVED
EROSION CONTROL ☒ S- EC-011532-2019
STORMWATER MGMT. ☒ S- WF-011530 -2019
FLOOD STUDY ☐ S-
DATE LAND DISTURBANCE PERMITTED IN TRACT A
WAKE COUNTY NC
ENVIRONMENTAL CONSULTANT SIGNATURE

NOTE: 93,244 SF WAS INCLUDED IN ORGINIAL PERMIT FOR AMENITY CENTER IMPERVIOUS

DEVELOPER:
EXPERIENCE ONE
3121 HIGHWAY 64
APEX, NC 27523

OWNER:
EXPERIENCE ONE
3121 HIGHWAY 64
APEX, NC 27523

ENGINEER:
SHAYNE LEATHERS, PE
BATEMAN CIVIL SURVEY COMPANY
2524 RELIANCE AVE.
APEX, NC 27539

Bateman Civil Survey Company
Engineers • Surveyors • Planners
2524 Reliance Avenue, Apex, North Carolina 27539
Phone: 919.577.1080 Fax: 919.577.1081
NCBELS FIRM No. C-2378

PROJECT NUMBER: 170348

811 KNOW WHAT IS BELOW CALL BEFORE YOU DIG

PRELIMINARY
NOT RELEASED
FOR CONSTRUCTION
01/29/2020

C000 - COVER

ELIZABETH SPRINGS - AMENITY CENTER

P:\2017 PROJECTS\170348 ELIZABETH HEIGHTS\ENG\CAD\DWG\SHEETS\AMENITY CENTER\AMENITY CENTER COVER.DWG

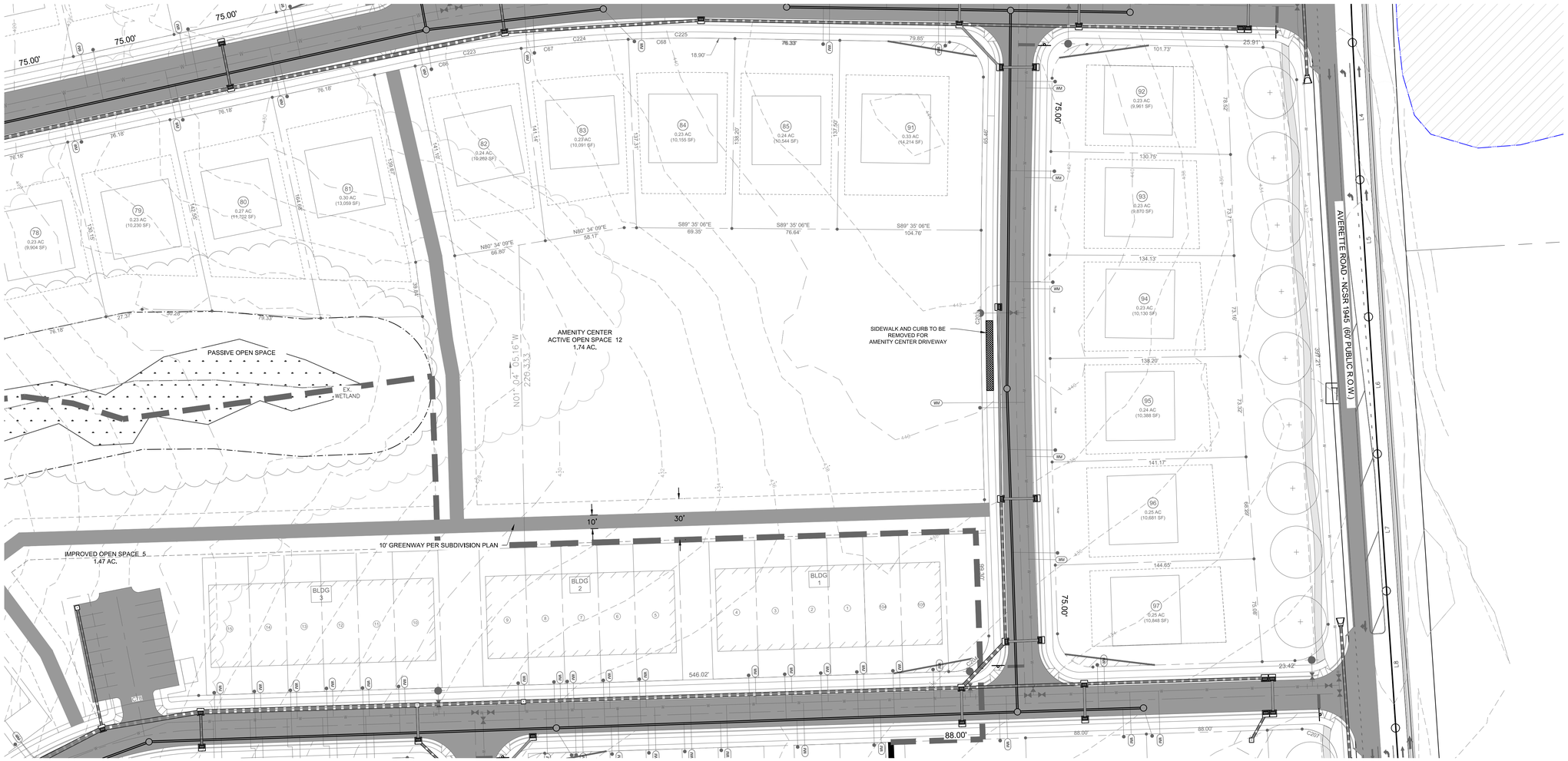

LEGEND:

- EXISTING POND
- EXISTING WETLAND
- EXISTING WATERSHED (R-40W)
- EXISTING STREAM / TOP OF BANK
- EXISTING 50' NEUSE RIVER BASIN RIPARIAN BUFFER

NOTES

1. PER FEMA MAPS 372018500J & 3720186000J FOR NORTH CAROLINA, THERE ARE NO FLOOD HAZARD AREAS WITHIN THE DEVELOPMENT BOUNDARIES.
2. EXISTING BOUNDARY TAKEN FROM A SURVEY BY BATEMAN CIVIL SURVEY COMPANY ON AUG. 8, 2017.
3. EXISTING TOPOGRAPHY DOWNLOADED FROM WAKE COUNTY GIS.
4. AMENITY CENTER TO BE BUILT AFTER PHASE 1 CONSTRUCTION. CONTRACTOR TO ESTABLISH AND RECORD PHASE 1 STREETS BEFORE AMENITY CENTER BEGINS.

KNOW WHAT IS BELOW
CALL BEFORE YOU DIG

1"=40' 40 40 80

REV.NO.	DESCRIPTIONS	

REVISIONS

NORTH CAROLINA PROFESSIONAL SEAL 027388 8/27/2020 ENGINEER SHANE LEWIS

Bateman Civil Survey Company
Engineers • Surveyors • Planners
2524 Reliance Avenue, Apex, North Carolina 27539
Phone: 919.577.1080 Fax: 919.577.1081
NCBELS FIRM No. C-2378

ELIZABETH SPRINGS
AMENITY CENTER
1205 AVERETTE ROAD
WAKE FOREST, NC 27587
WAKE COUNTY, NC

EXISTING CONDITIONS PLAN

Project Engineer:	SL
Designed By:	WKB
Drawn By:	WKB
Checked By:	SL
Scale:	1"=40'
Date:	08/27/2020
Project Number:	170348

SHEET
C101

SITE NOTES:

1.THE CONTRACTOR SHALL BE RESPONSIBLE FOR THE INSTALLATION AND MAINTENANCE OF THE CONSTRUCTION LAYDOWN AREA, PERIMETER FENCE, AND ASSOCIATED GATES. THE CONTRACTOR SHALL ALSO BE RESPONSIBLE FOR THE REMOVAL OF THE CONSTRUCTION LAYDOWN AREA PERIMETER FENCE AND ASSOCIATED GATES AT THE COMPLETION OF THE PROJECT
.

2.THE CONTRACTOR SHALL REFERENCE THE DESIGN PLANS FOR DIMENSIONS, JOINT LOCATIONS, AND INLAY SPECIFICATIONS NEAR BUILDINGS AND IN COURTYARDS. CONTRACTOR SHALL PROVIDE JOINTS IN WALKWAYS AND HARDSCAPE PER DETAILS OR AS INDICATED ON LANDSCAPE/HARDSCAPE PLAN SHEETS.

3.ALL CONSTRUCTION TRAFFIC SHALL ENTER SITE FROM MARSHHAWK WAY UNLESS OTHERWISE APPROVED IN WRITING FROM THE OWNER'S REPRESENTATIVE FOR AN ALTERNATE POINT OF ACCESS.

4.REFER TO ARCHITECTURAL PLANS FOR BUILDING INFORMATION.

5.ALL DIMENSIONS ARE IN DECIMAL FEET TO OUTSIDE FACE OF BUILDINGS, TO CENTERLINES, AND/OR FACE OF CURB UNLESS OTHERWISE NOTED.

6. THIS SITE IS LOCATED IN THE NEUSE RIVER BASIN AND STREET DESIGNS MUST MEET TOWN OF ROLESVILLE REQUIREMENTS.

7.THE CONTRACTOR SHALL VERIFY ALL DIMENSIONS AND COORDINATES AND REPORT ANY DISCREPANCIES TO THE OWNER'S REPRESENTATIVE PRIOR TO ANY CONSTRUCTION.

8.ALL WRITTEN DIMENSIONS SHALL PREVAIL. DO NOT SCALE FROM DRAWINGS.

9.ALL UTILITIES WITH SURFACE ACCESS SHALL BE LOCATED WITHIN THE PAVING PATTERN AND SHALL BE COORDINATED WITH LANDSCAPE ARCHITECT PRIOR TO CONSTRUCTION. REFER TO LAYOUT DRAWINGS.

10. ALL ANGLES ARE 90 DEGREES UNLESS OTHERWISE NOTED.

11. ALIGN ALL JOINTS, CORNERS, AND EDGES AS SHOWN

12. CONTRACTOR SHALL REFER TO AND COORDINATE WITH ARCHITECTURAL, STRUCTURAL, AND MEP DRAWINGS AT ALL TIMES PRIOR TO AND DURING CONSTRUCTION.

13. ALL CURB TAPERS ARE SIX (6') FEET LONG UNLESS OTHERWISE SHOWN ON PLAN.

14. WHERE NEW SIDEWALK ADJOINS EXISTING WALK, PROVIDE EXPANSION JOINT BY DRILLING INTO THE FACE OF THE EXISTING WALK FOR PLACEMENT OF DOWELS. TIE NEW SIDEWALKS INTO NEAREST EXISTING PAVEMENT JOINT; MATCH WIDTH OF EXISTING WALKWAY.

15. WHERE SIDEWALK OR WALKWAYS ARE ADJACENT TO PARKING SPACES THE WALKWAY SHALL BE A MINIMUM 6' WIDE AS MEASURED FROM THE FACE OF CURB.

16. MAXIMUM RUNNING SLOPE FOR WALKING SURFACES CANNOT BE GREATER THAN 1:20 AND CROSS SLOPES CANNOT BE GREATER THAN 1:48. HANDICAP SPACES SURFACE SLOPES SHALL NOT EXCEED 1:48 IN ALL DIRECTIONS.

17. SIGHT TRIANGLES – NOTHING OVER 30" HIGH SHALL BE ALLOWED WITHIN THE SIGHT DISTANCE TRIANGLES.

18. THE SITE SHALL BE FULLY STABILIZED (90% COVERAGE) PRIOR TO ISSUANCE OF A BUILDING CERTIFICATE OF OCCUPANCY OR PROJECT APPROVAL

19. HANDICAP RAMPS SHALL BE INSTALLED PER LATEST EDITION OF THE NC BUILDING CODE AND ANSI 117.11 WITH DETECTABLE WARNING DOMES WITH A COLOR CONTRAST OF 70% MINIMUM. SEE DETAILS AND GRADING SPOT ELEVATIONS, IF THE EXISTING CONDITIONS PRECLUDE THE ABILITY TO PROVIDE A MAXIMUM SLOPE 1/12 FOR 6–FEET OR A MAXIMUM CROSS SLOPE OF 1:48 AND A 36"MINIMUM LANDING, THE CONTRACTOR SHALL NOTIFY ENGINEER OR OWNER REPRESENTATIVE PRIOR TO INSTALLATION.

20. THE TESTING AGENCY SHALL BE RESPONSIBLE FOR PROVIDING THE ASPHALT AND CONTRACTOR CERTIFICATION MEMO TO NCDOT FOR ALL ROADWAY IMPROVEMENTS WITHIN THE PUBLIC RIGHT–OF–WAY.

21. THE MAINTENANCE OF ALL REQUIRED LANDSCAPING BY KEEPING LAWNS MOWED, ALL PLANTS MAINTAINED AS DISEASE FREE, AND ALL PLANTING BEDS GROOMED AND KEPT WEED FREE (EXCEPT IN AREAS OF PRESERVED EXISTING NATURAL VEGETATION (I.E. THICKETS), AND KEPT FREE FROM TRASH, DEBRIS AND OTHER OBJECTIONABLE MATERIALS; THE REPLACEMENT OF ANY REQUIRED PLANTING, WHICH IS REMOVED OR DIES AFTER THE DATE OF PLANTING. SUCH REPLACEMENT SHALL OCCUR DURING THE NEXT PLANTING SEASON; AND, THE REPLACEMENT OF ANY TREE IN A TREE SAVE AREA, WHICH IS REMOVED OR DIES AFTER THE DATE OF APPROVAL OF A PRESERVATION LANDSCAPE PLAN. SUCH REPLACEMENT SHALL OCCUR DURING THE NEXT PLANTING

22. TRASH WILL BE HANDLED VIA RESIDENTIAL STYLE RECEPTACLES. TRASH WILL BE WHEELED TO R.O.W. FOR COLLECTION.

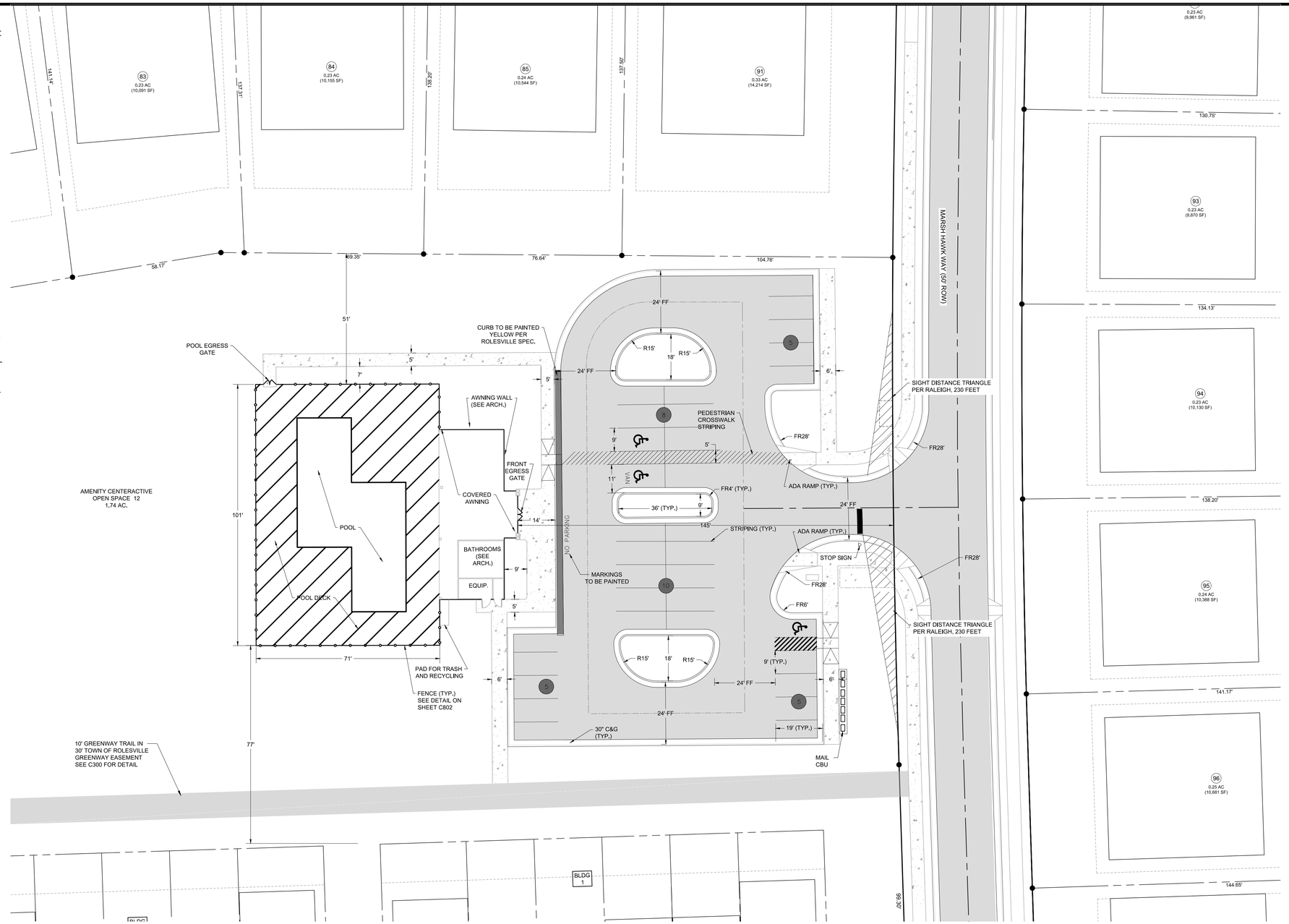

LEGEND

- PROPOSED ASPHALT
- PROPOSED SIDEWALK
- PROPOSED EASEMENT
- PROPOSED FENCE
- PROPOSED STRIPING
- PARKING COUNT

REV.NO.	DESCRIPTIONS	

REVISIONS

KNOW WHAT IS BELOW
CALL BEFORE YOU DIG

1"=20' 20 20 40

NORTH Referenced To N.C. GRID (NAD 83)

NORTH CAROLINA PROFESSIONAL SEAL 027388 8/27/2020 SURVEYOR

Bateman Civil Survey Company
Engineers • Surveyors • Planners
2524 Reliance Avenue, Apex, North Carolina 27539
Phone: 919.577.1080 Fax: 919.577.1081
NCBELS FIRM No. C-2378

ELIZABETH SPRINGS
AMENITY CENTER
1205 AVERETTE ROAD
WAKE FOREST, NC 27587
WAKE COUNTY, NC

SITE PLAN

Project Engineer:	SL
Designed By:	WKB
Drawn By:	WKB
Checked By:	SL
Scale:	1"=20'
Date:	08/27/2020
Project Number:	170348

SHEET
C300

GRADING & STORM DRAINAGE NOTES:

1. REFER TO SHEET C3.00 FOR GENERAL NOTES.

2. CONTRACTOR SHALL REPORT ANY GRADE DISCREPANCIES TO THE OWNER'S REPRESENTATIVE PRIOR TO BEGINNING CONSTRUCTION OPERATIONS.

3. THE MAXIMUM SLOPE ALONG ANY HANDICAP ACCESSIBLE PATHWAY SHALL NOT EXCEED 5.0% AND SHALL NOT EXCEED A 2.0% CROSS SLOPE. HANDICAP RAMPS INDICATED ON PLANS SHALL BE A MAXIMUM OF 1/12 SLOPES WITH A MAXIMUM RISE OF 30"BETWEEN LANDINGS. NON-CURB CUT RAMPS SHALL HAVE HANDRAILS AND GUARDS PER DETAILS WITH 5' LANDINGS AT THE BOTTOM AND TOP OF RAMP.

4. ALL PROPOSED ELEVATIONS SHOWN ARE EDGE OF PAVEMENT ELEVATIONS UNLESS OTHERWISE SPECIFIED.

5. ALL AREAS WHERE UNPAVED AREAS SLOPE ONTO PAVED AREAS, A 2' WIDE FLAT AREA WITH A SLOPE OF 2% TOWARDS THE PAVED AREA SHALL BE PROVIDED TO PREVENT ORGANICS WASHOUT.

6. THE CONTRACTOR SHALL BE RESPONSIBLE FOR ENSURING THAT ALL NEWLY CONSTRUCTED STORM DRAINAGE IMPROVEMENTS AND RECEIVING STORM DRAINAGE SYSTEMS REMAIN CLEAN OF SEDIMENT AND DEBRIS. PRIOR TO OWNER ACCEPTANCE OF SYSTEM, THE CONTRACTOR SHALL COORDINATE AND PROVIDE A VISUAL OBSERVATION VIDEO OF ALL STORM DRAINAGE IMPROVEMENTS 12" AND LARGER. THE VISUAL OBSERVATION SHALL BE PERFORMED IN THE PRESENCE OF THE OWNER'S REPRESENTATIVE. THE CONTRACTOR SHALL PROVIDE TWO (2) DVD COPIES OF THE ENTIRE DRAINAGE VISUAL OBSERVATION.

7. PRIOR TO ISSUANCE OF A BUILDING CERTIFICATE OF OCCUPANCY THE CONTRACTOR SHALL PROVIDE THE OWNER WITH THE VIDEO INSPECTION OF THE STORM SEWER SYSTEM. (BOTH PUBLIC AND PRIVATE). THIS SUBMITTAL MAY NEED TO BE REVIEWED AND ACCEPTED BY THE LOCAL JURISDICTION PRIOR TO THE ISSUANCE OF THE BUILDING CO.

8. REFER TO THE EROSION CONTROL DETAILS SHEET FOR THE SEQUENCE OF CONSTRUCTION.

9. INTERIM GRADING SHALL BE PROVIDED THAT ENSURES THE PROTECTION OF STRUCTURES, UTILITIES, SIDEWALKS, PAVEMENTS, AND OTHER FACILITIES FROM DAMAGE CAUSED BY SETTLEMENT, LATERAL MOVEMENT, UNDERMINING, AND WASHOUT.

10. INTERIM GRADING SHALL BE PROVIDED TO DIRECT WATER AWAY FROM BUILDINGS AND PREVENT PONDING.

11. MAXIMUM SLOPE ACROSS ANY HANDICAPPED PARKING SPACE AND AISLE SHALL NOT EXCEED 2% IN ANY DIRECTION.

13. PROPOSED CONTOURS ARE APPROXIMATE. SPOT ELEVATIONS AND ROADWAY PROFILES SHALL BE USED IN CASE OF DISCREPANCY.

14. PLACE BACKFILL AND FILL MATERIALS IN LAYER NOT MORE THAN 8 INCHES IN LOOSE DEPTH FOR MATERIAL COMPACTED BY HEAVY COMPACTION EQUIPMENT, AND NOT MORE THAN 4 INCHES IN LOOSE DEPTH FOR MATERIAL COMPACTED BY HAND-OPERATED TAMPERS. PLACE BACKFILL AND FILL MATERIALS EVENLY ON ALL SIDES TO REQUIRED ELEVATIONS, AND UNIFORMLY ALONG THE FULL LENGTH OF EACH STRUCTURE. COMPACT SOIL TO NOT LESS THAN 95 PERCENT OF MAXIMUM DRY UNIT WEIGHT ACCORDING TO ASTM D 698 FOR EACH LAYER OF BACKFILL OR FILL MATERIAL UP TO TWO FEET OF FINISHED GRADE. COMPACT SOIL TO NOT LESS THAN 98 PERCENT OF MAXIMUM DRY UNIT WEIGHT ACCORDING TO ASTM D 698 FOR EACH LAYER OF BACKFILL OR FILL MATERIAL FOR THE FINAL TWO FEET.

15. SITE GRADING IMMEDIATELY ADJACENT TO FOUNDATION OF BUILDING SHALL SLOPE NOT LESS THAN 1/20 AWAY FOR MINIMUM DISTANCE OF 10 FEET. ALTERNATIVE METHOD SHALL BE PROVIDED TO DIVERT WATER AWAY FROM FOUNDATION VIA SWALES SLOPED AT A MINIMUM OF 2% OR IMPERVIOUS SURFACES SLOPED AWAY A MINIMUM OF 2% AWAY FROM BUILDING.

16. CONTRACTOR SHALL ADJUST RIM ELEVATIONS OF EXISTING MANHOLES, METERS, VALVES, ETC. AS REQUIRED TO MEET NEW FINISHED GRADES.

17. CONTRACTOR SHALL SLOPE GRADES TO ASSURE POSITIVE STROMWATER FLOW TO KEEP WATER FROM POOLING ALONG CURBS AND WALLS.

18. ALL SPOTS IN PAVED CURB AREAS DENOTE ELEVATION OF BOTTOM OF CURB.

19. ROOF LEADERS TO TIE TO 459-CB @ MIN. COVER

WAKE COUNTY CONSTRUCTION SEQUENCE:

1. **SCHEDULE A PRECONSTRUCTION CONFERENCE WITH THE WATERSHED MANAGER SCOTT REAMS VIA 919-868-4986. OBTAIN A LAND-DISTURBING PERMIT.**
2. **INSTALL GRAVEL CONSTRUCTION PAD, TEMPORARY DIVERSIONS, SILT FENCE, SEDIMENT BASINS OR OTHER MEASURES AS SHOWN ON THE APPROVED PLAN. CLEAR ONLY AS NECESSARY TO INSTALL THESE DEVICES. SEED TEMPORARY DIVERSIONS, BERMS AND BASINS IMMEDIATELY AFTER CONSTRUCTION.**
3. **CALL SCOTT REAMS VIA 919-868-4986 FOR AN ONSITE INSPECTION TO OBTAIN A CERTIFICATE OF COMPLIANCE.**
4. **BEGIN CLEARING AND GRUBBING. MAINTAIN DEVICES AS NEEDED. ROUGH GRADE SITE.**
5. **INSTALL STORM SEWER, IF SHOWN, AND PROTECT INLETS WITH BLOCK AND GRAVEL INLET CONTROLS, SEDIMENT TRAPS OR OTHER APPROVED MEASURES AS SHOWN ON THE PLAN. BEGIN CONSTRUCTION, BUILDING, ETC.**
6. **STABILIZE SITE AS AREAS ARE BROUGHT UP TO FINISH GRADE WITH VEGETATION, PAVING, DITCH LININGS, ETC. SEED AND MULCH DENUDED AREAS PER GROUND STABILIZATION TIME FRAMES.**
7. **WHEN CONSTRUCTION IS COMPLETE AND ALL AREAS ARE STABILIZED COMPLETELY, CALL SCOTT REAMS VIA 919-868-4986 FOR AN INSPECTION.**
8. **IF SITE IS APPROVED, REMOVE TEMPORARY DIVERSIONS, SILT FENCE, SEDIMENT BASINS, ETC., AND SEED OUT OR STABILIZE ANY RESULTING BARE AREAS. ALL REMAINING PERMANENT EROSION CONTROL DEVICES, SUCH AS VELOCITY DISSIPATORS, SHOULD NOW BE INSTALLED.**
9. **WHEN VEGETATION HAS BECOME ESTABLISHED, CALL FOR A FINAL SITE INSPECTION BY THE WATERSHED MANAGER SCOTT REAMS VIA 919-868-4986. OBTAIN A CERTIFICATE OF COMPLETION.**

NOTE: EXISITING TOPOGRAPHY VIA SURVEY COMPLETED BY BATEMAN CIVIL SURVEY COMPANY.

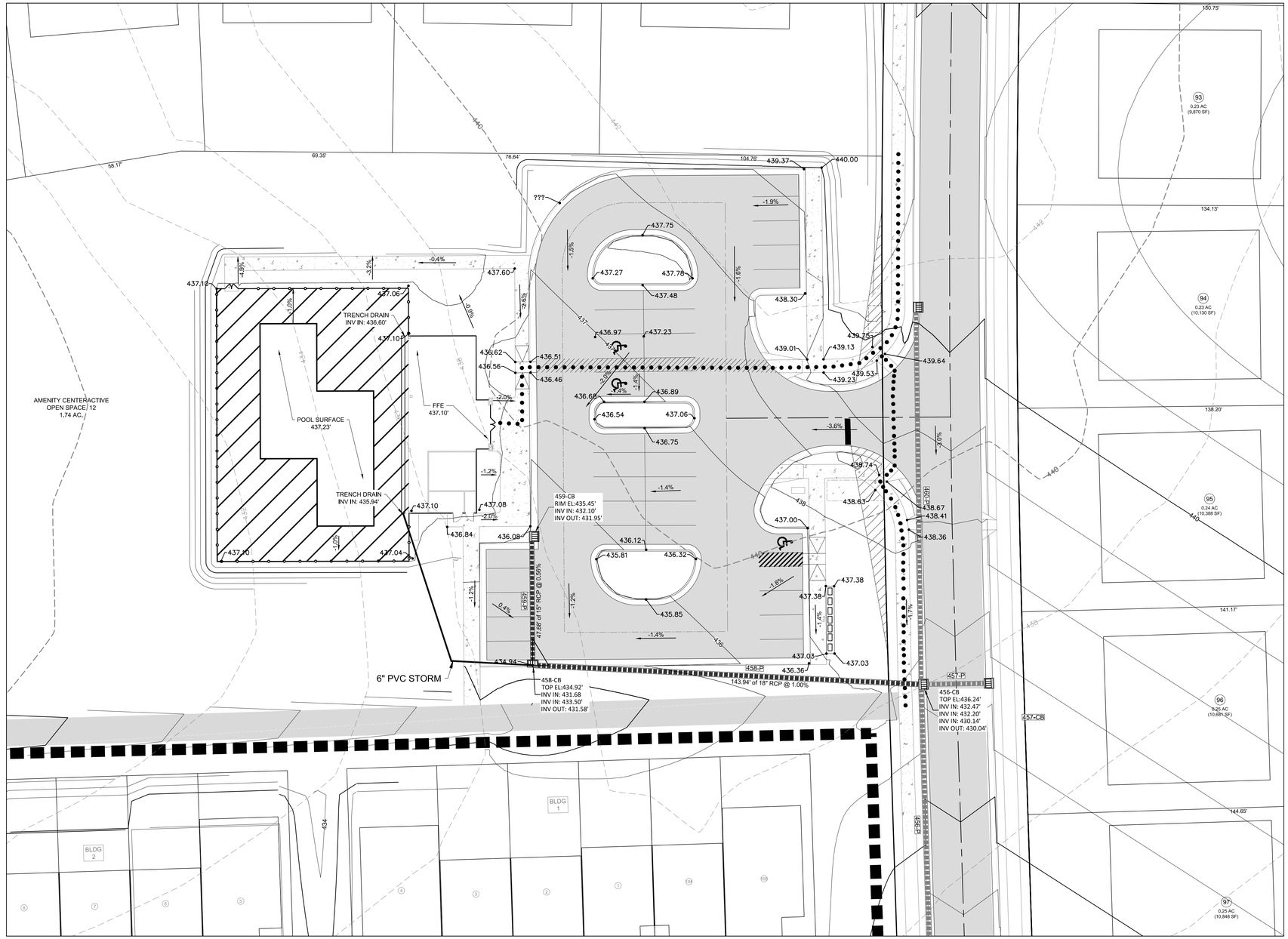

EXISTING MAJOR CONTOURS
EXISTING MINOR CONTOURS
PROPOSED MAJOR CONTOURS
PROPOSED MINOR CONTOURS
436 CONTOUR LABEL
ADA ACCESSIBLE PATH

811 KNOW WHAT IS BELOW CALL BEFORE YOU DIG

1"=20' 20 20 40

NORTH Referenced to N.C. GRID (NAD 83)

REV.NO.	DESCRIPTIONS	

REVISIONS

NORTH CAROLINA PROFESSIONAL SEAL 027388 8/27/2020 SCOTT LAMBERT PROFESSIONAL ENGINEER

Bateman Civil Survey Company
Engineers ● Surveyors ● Planners
2524 Reliance Avenue, Apex, North Carolina 27539
Phone: 919.577.1080 Fax: 919.577.1081
NCBELS FIRM No. C-2378

ELIZABETH SPRINGS
AMENITY CENTER
1205 AVERETTE ROAD
WAKE FOREST, NC 27587
WAKE COUNTY, NC

GRADING PLAN

Project Engineer:	SL
Designed By:	WKB
Drawn By:	WKB
Checked By:	SL
Scale:	1"=20'
Date:	08/27/2020
Project Number:	170348

SHEET
C310

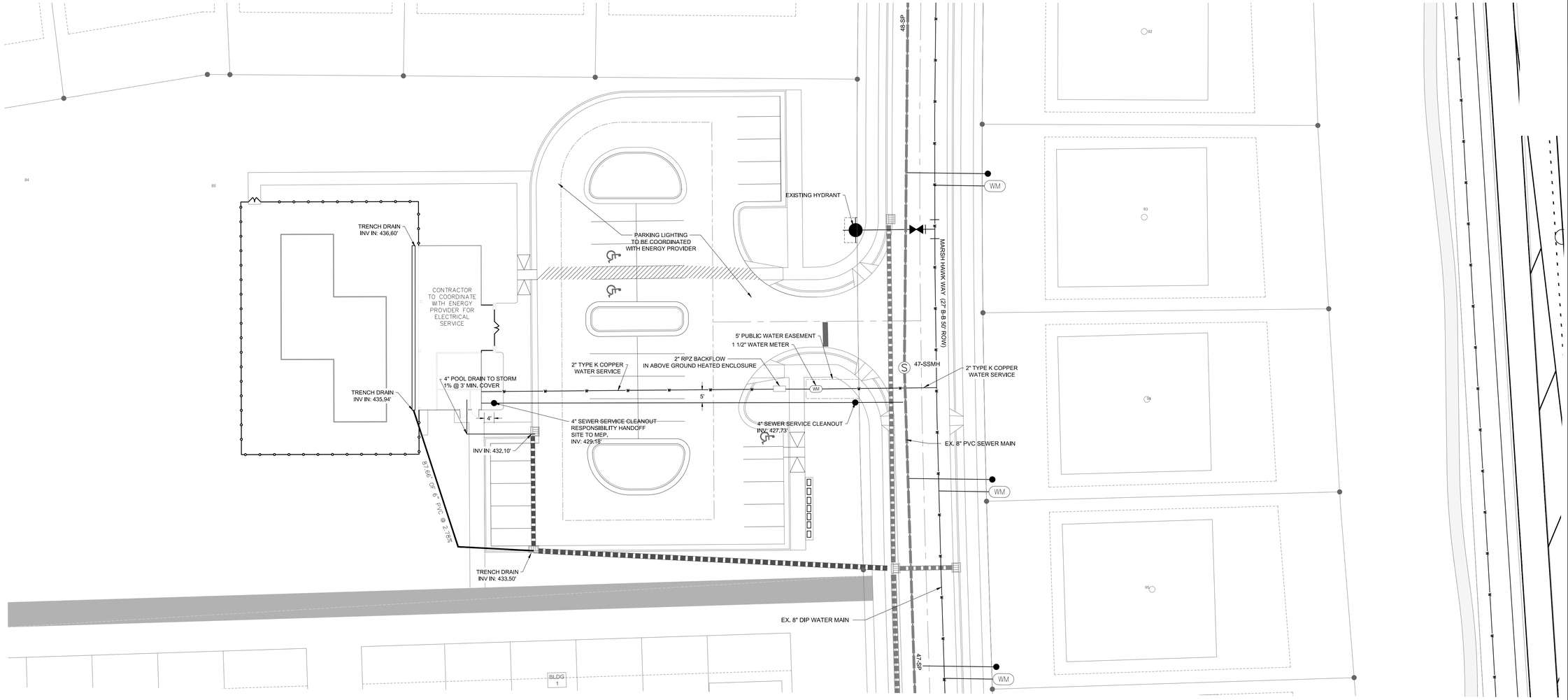

SEWER NOTES:

1. ALL PVC SEWER PIPES ARE TO BE SDR-35 SPEC. UNLESS SPECIFIED OTHERWISE.

2. MINIMUM REQUIRED SLOPES FOR SEWER SERVICES:
   4" SEWER SERVICE – 2.00% SLOPE
   6" SEWER SERVICE – 1.00% SLOPE
   8" SEWER SERVICE – 0.50% SLOPE

3. UNLESS OTHERWISE NOTED, LOCATE SANITARY SERVICE CLEANOUTS AT ALL HORIZONTAL OR VERTICAL CHANGES IN DIRECTION. MAXIMUM SPACING BETWEEN CLEANOUTS SHALL BE 75 FEET.

4. SEWER LINES LESS THAN 3 FEET OF COVER SHALL BE CLASS 50 DUCTILE IRON PIPE. SEWER LINES WITH GREATER THAN 3 FEET OF COVER SHALL BE AS NOTED BELOW:
   4" SEWER SERVICE – SCH 80
   6" SEWER SERVICE – SCH 80
   8" SEWER SERVICE – SDR-35

5. SEWER LINES UNDER CONSTRUCTION SHALL BE PROTECTED FROM DIRT, DEBRIS OR OTHER CONTAMINANTS ENTERING THE NEW SYSTEM. A MECHANICAL PLUG SHALL BE UTILIZED BOTH IMMEDIATELY UPSTREAM OF THE NEW CONSTRUCTION AND AT THE FIRST MANHOLE DOWNSTREAM IN THE EXISTING SYSTEM. EXISTING STRUCTURES, PIPING AND APPURTENANCES SHALL BE PROTECTED FROM ANY INFLOW OF WATER, DIRT OR DEBRIS DUE TO NEW CONSTRUCTION CONNECTING TO OR IN THE VICINITY OF THE EXISTING SYSTEM. CONTRACTOR TO REMOVE DEBRIS AND PLUG PRIOR TO OCCUPANCY.

6. ARCHITECT WILL DESIGN FOR 4" PIPE TO PUMP SEWER FROM AMENITY CENTER TO STREET

UTILITY NOTES:

1. REFER TO SHEET C3.00 FOR GENERAL NOTES.

2. THE CONTRACTOR SHALL COORDINATE THE CONSTRUCTION OF UNDERGROUND UTILITIES (WATER, SEWER, STORM, ELECTRICAL, GAS, OR OTHER) FOR THIS PROJECT WITH THE BUILDING PLANS. THE UTILITY CONTRACTOR SHALL ALSO BE RESPONSIBLE FOR THE INSTALLATION OF ALL UTILITY SERVICES TO WITHIN FIVE (5) FEET OF THE BUILDING CONNECTION POINT.

3. THE CONTRACTOR SHALL COORDINATE WITH OTHER CONTRACTORS ON SITE AND UTILITY PROVIDERS DURING CONSTRUCTION TO ENSURE SMOOTH TRANSITION BETWEEN DISCIPLINES.

4. THE CONTRACTOR SHALL COORDINATE ALL PEDESTRIAN AND VEHICULAR INTERRUPTIONS WITH OWNER'S REPRESENTATIVE AT LEAST 72 HOURS PRIOR TO BEGINNING WORK.

5. THE CONTRACTOR SHALL NOT PROCEED WITH ANY WORK INSIDE THE PUBLIC RIGHT OF WAY PRIOR TO RECEIPT AND COMPLIANCE WITH ALL APPLICABLE NCDOT PERMITS. ADDITIONALLY, THE CONTRACTOR SHALL BE RESPONSIBLE FOR PROVIDING ALL NECESSARY FLAGGERS AND TRAFFIC CONTROL DURING ALL WORK INSIDE THE PUBLIC RIGHTS OF WAY.

6. ALL EXISTING SUB-SURFACE UTILITIES IDENTIFIED ON THE CONSTRUCTION DOCUMENTS ARE SHOWN IN THEIR APPROXIMATE LOCATION BASED ON SURVEY INFORMATION GATHERED FROM FIELD INSPECTION AND/OR ANY OTHER APPLICABLE RECORD DRAWINGS WHICH MAY BE AVAILABLE. DEPTHS OF EXISTING UTILITIES SHOWN IN PROFILE VIEWS ARE BASED ON STANDARD ASSUMPTIONS. THE CONTRACTOR SHALL FIELD VERIFY THE EXACT LOCATION, DEPTH, SIZE AND MATERIAL OF ANY AND ALL SUB-SURFACE CONDITIONS REFERENCED IN THESE PLANS PRIOR TO ANY EXCAVATION OR CONSTRUCTION ACTIVITY. THE CONTRACTOR SHALL IMMEDIATELY NOTIFY THE OWNER'S REPRESENTATIVE OF ANY DISCREPANCIES OR CONFLICTS.

7. ELEVATIONS OF UTILITIES ARE GIVEN TO THE EXTENT OF INFORMATION AVAILABLE, WHERE ELEVATIONS ARE NOT GIVEN AT POINTS OF EXISTING UTILITY CROSSINGS, SUCH ELEVATIONS SHALL BE DETERMINED BY THE CONTRACTOR AND REPORTED TO THE ENGINEER, WHEN UNKNOWN LINES ARE EXPOSED, THEIR LOCATIONS AND ELEVATIONS SHALL ALSO BE REPORTED TO THE ENGINEER.

8. UNDERGROUND UTILITIES SHOWN ON THIS PLAN SHALL BE INSTALLED PRIOR TO ANY CONSTRUCTION OF PARKING AREA, DRIVES, CURB AND GUTTER OR CONCRETE WALKS / PADS. IF UTILITIES SHOWN ON THIS PLAN CANNOT BE INSTALLED PRIOR TO INSTALLATION OF IMPERVIOUS (ASPHALT / CONCRETE) CONDUIT SHALL BE INSTALLED FOR THE "FUTURE" UTILITY INSTALLATION.

9. AS-BUILT DOCUMENTATION REQUIREMENTS: PRIOR TO APPROVAL FROM LOCAL JURISDICTION OR ENGINEER THE CONTRACTOR SHALL PROVIDE AS-BUILT DRAWINGS (IN BOTH PAPER AND ELECTRONIC FORMAT (CAD / PDF) PREPARED AND SEALED BY A PROFESSIONAL LAND SURVEYOR SHOWING ALL UTILITY INSTALLATION. HORIZONTAL AND VERTICAL INFORMATION SHALL BE PROVIDED FOR WATER, SEWER, STORM INCLUDING ALL STRUCTURES, VALVES, HYDRANTS, AND OTHER APPURTENANCES.

10. CONTRACTOR TO COORDINATE HOT BOX ELECTRICAL WITH BUILDING ELECTRICAL.

11. WATER SHALL BE DECHLORINATED PRIOR TO DISCHARGE INTO STORM SYSTEM PER ROLESVILLE REQUIREMENTS.

WATER NOTES:

1. AS INDICATED, ALL WATERLINES SHALL BE DUCTILE IRON PIPE MEETING THE REQUIREMENTS OF ANSI-AWWA C151 PRESSURE CLASS 350 OR SOFT COPPER TYPE K PIPE PER ASTM B88. IF PVC WATERLINE IS INDICATED ON THE PLANS IT SHALL MEET THE REQUIREMENTS OF AWWA C-900; CLASS 200.

2. ALL WATERLINES SHALL HAVE A MINIMUM OF 3.5 FEET OF COVER.

3. TESTING NOTES:

PRESSURE:
LEAKAGE SHALL NOT EXCEED THE MAXIMUM ALLOWABLE LEAKAGE SPECIFIED IN AWWA C 600. MINIMUM TEST PRESSURE SHALL BE 150 PSI FOR DOMESTIC AND 200 PSI FOR FIRE PROTECTION.
BACTERIOLOGICAL:
TWO SAMPLES FOR BACTERIOLOGICAL SAMPLING SHALL BE COLLECTED AT LEAST 24 HOURS APART. IF CONTAMINATION IS INDICATED, THEN THE DISINFECTION PROCEDURE AND TESTING SHALL BE REPEATED UNTIL SATISFACTORY RESULTS ARE OBTAINED.

4. THE CHLORINE IN HEAVILY CHLORINATED WATER FLUSHED FROM MAINS NEEDS TO BE NEUTRALIZED BEFORE DISCHARGE. CONTRACTORS SHALL NEUTRALIZE HEAVILY CHLORINATED WATER FLUSHED FROM MAINS PRIOR TO DISCHARGE OR TRANSPORT ALL HEAVILY CHLORINATED WATER OFFSITE FOR PROPER DISPOSAL.

5. PAINT VALVE COVERS, FIRE HYDRANTS AND OTHER WATER APPARATUS TO MEET THE LOCAL JURISDICTIONAL REQUIREMENTS.

REV.NO.	DESCRIPTIONS	

REVISIONS

811
KNOW WHAT IS BELOW
CALL BEFORE YOU DIG

1"=20' 20 20 40

NORTH Referenced to N.C. GRID (NAD 83)

NORTH CAROLINA PROFESSIONAL SEAL 027388 8/27/2020 ENGINEERING

Bateman Civil Survey Company
Engineers • Surveyors • Planners
2524 Reliance Avenue, Apex, North Carolina 27539
Phone: 919.577.1080 Fax: 919.577.1081
NCBELS FIRM No. C-2378

ELIZABETH SPRINGS
AMENITY CENTER
1205 AVERETTE ROAD
WAKE FOREST, NC 27587
WAKE COUNTY, NC

UTILITY PLAN

Project Engineer:	SL
Designed By:	WKB
Drawn By:	WKB
Checked By:	SL
Scale:	1"=20'
Date:	08/27/2020
Project Number:	170348

SHEET
C401

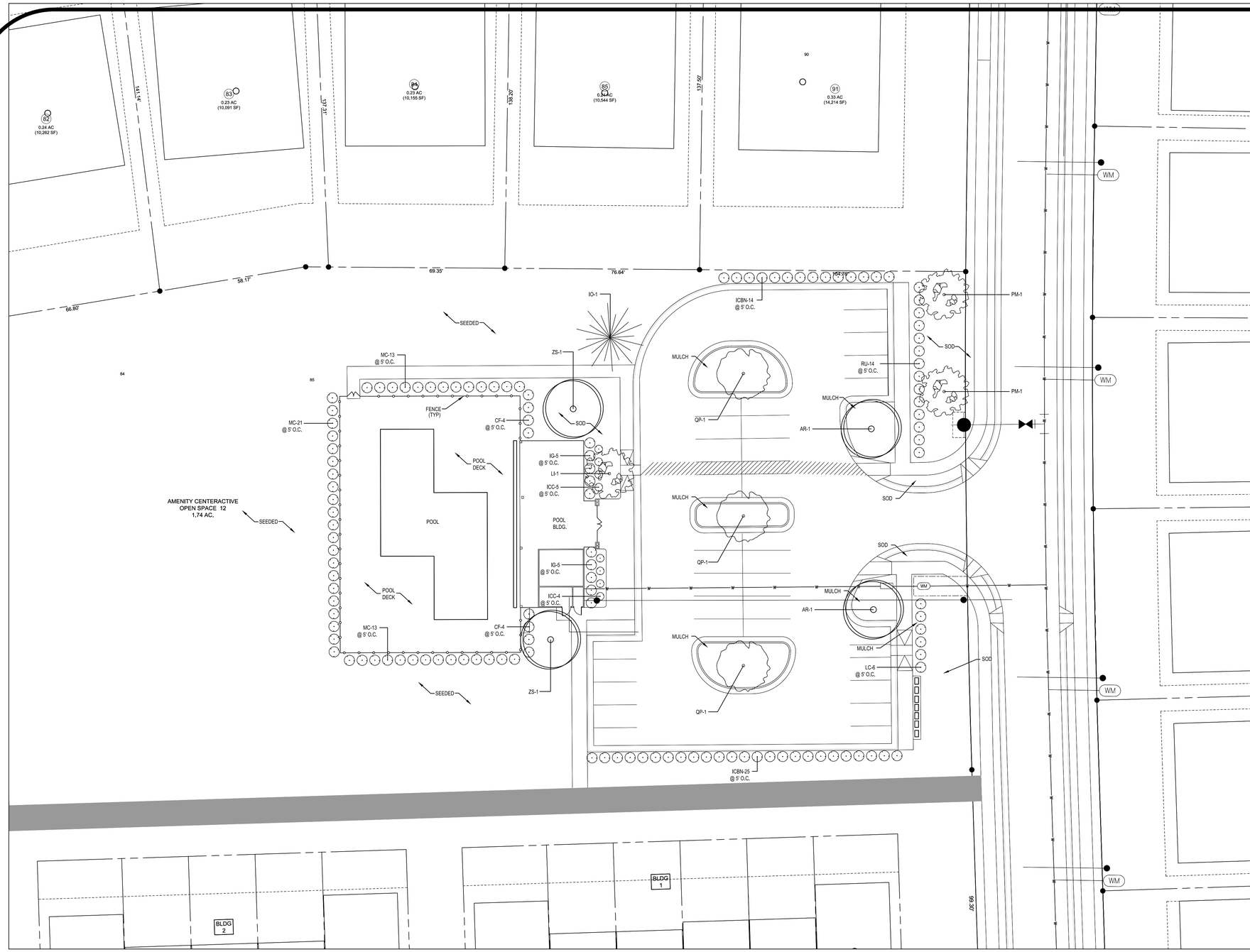

LANDSCAPE PLANTING NOTES

1. ALL TECHNICAL SPECIFICATIONS AND GENERAL CONDITIONS APPLY. ALL GENERAL NOTES AND GENERAL CONSTRUCTION NOTES APPLY.
2. THE CONTRACTOR IS RESPONSIBLE FOR ALL QUANTITY TAKE-OFFS AND VERIFICATION OF MATERIALS AS SHOWN ON THESE PLANS AND IN WRITTEN SPECIFICATIONS. THE CONTRACTOR SHALL NOTIFY THE OWNER AND THE LANDSCAPE ARCHITECT OF ANY DISCREPANCIES PRIOR TO FINAL BIDDING OR INSTALLATION.
3. THE CONTRACTOR SHALL VERIFY LOCATIONS OF EXISTING AND PROPOSED UNDERGROUND UTILITIES PRIOR TO THE INSTALLATION OF ANY PLANT MATERIAL.
4. ALL LANDSCAPE MATERIALS SHALL CONFORM TO THE ACCEPTED STANDARDS ESTABLISHED BY THE AMERICAN ASSOCIATION OF NURSERYMEN, INCLUDING THE AMERICAN STANDARD FOR NURSERY STOCK (ANZI Z60.1)
5. PRIOR TO THE END OF EACH WORKING DAY, THE CONTRACTOR SHALL PROPERLY BACKFILL ALL PLANT MATERIAL THAT HAS BEEN PLACED IN PREPARED HOLES; AND PROPERLY WATER AND MULCH ALL PREPARED GROUNDCOVER, PERENNIAL AND ANNUAL BEDS.
6. ALL TREES AND SHRUBS SHALL BE SOAKED WITH WATER AND MULCHED IMMEDIATELY FOLLOWING INSTALLATION.
7. ALL ROOT BALLS REMOVED FROM CONTAINERS SHALL BE SCARIFIED BY HAND PRIOR TO PLACEMENT AND BACK FILLING WITH PREPARED SOILS. HAND TOOLS ARE NOT TO BE USED TO SCARIFY ROOT BALLS.
8. ALL ROPE AND WRAPPING TWINE SHALL BE CUT AND REMOVED FROM AROUND THE UPPER PARTS OF THE ROOT BALL. METAL BASKET WIRES AND BURLAP SHALL BE PULLED BACK AND TUCKED UNDER THE EDGES OF THE SAUCER RINGS ON ALL TREES AND LARGE SHRUBS. ALL SYNTHETIC BURLAP SHALL BE REMOVED FROM PLANT BALLS PRIOR TO BACKFILLING.
9. ALL PLANTING AREAS SHALL BE EDGED WITH SMOOTH, CONTINUOUS CURVES. PINE STRAW MULCH, IF SPECIFIED, SHALL BE ROLLED AND TUCKED ALONG PLANT BED EDGE.
10. ALL PLANT MATERIAL SHALL BE PLANTED AT HEIGHTS AS ILLUSTRATED IN THE PLANTING DETAILS & PLANT LIST.
11. TREE STAKING AND GUYING, IF NECESSARY, SHALL BE PERFORMED WITHIN A WEEK OF PLANTING. THE LANDSCAPE CONTRACTOR SHALL BE RESPONSIBLE FOR REMOVING ALL TREE STAKING MATERIAL AFTER THE FIRST FULL GROWING SEASON OR ONE YEAR, WHICH EVER COMES FIRST.
12. B & B AS LISTED UNDER "ROOT" IN THE PLANT LIST INDICATES BALLED AND BURLAPPED.
13. ALL PLANT BEDS AND RAISED SAUCER RINGS SHALL BE GRADED TO PROVIDE ADEQUATE DRAINAGE AND SHALL BE MULCHED AS SPECIFIED.

ROLESVILLE LANDSCAPE REQUIREMENTS

VEHICULAR USE AREA LANDSCAPING

REQUIRED/PROVIDED: 1 LARGE (2.5" CAL) TREE WITHIN 60 LF OF EACH PARKING SPACE
REQUIRED/PROVIDED: SCREEN FROM OFFSITE VIEWS WITH A CONTINUOUS 3' HGT EVERGREEN HEDGE, SHRUBS
SHALL BE 24" HGT / 3 GAL SIZE AT INSTALLATION

LANDSCAPE SCHEDULE

KEY	QTY.	BOTANICAL NAME	COMMON NAME	SIZE	REMARKS
CANOPY / UNDERSTORY TREE(S)					
ZS	2	ZELKOVA SERATTA 'VILLAGE GREEN'	JAPANESE ZELKOVA	2" CAL., 8'-10' HT.	
AR	2	ACER RUBRUM 'OCTOBER GLORY'	RED MAPLE	2" CAL., 8'-10' HT.	
QP	3	QUERCUS PHELLOS 'HIGHTOWER'	WILLOW OAK	2" CAL., 8'-10' HT.	
IO	1	ILEX OPACA	AMERICAN HOLLY	8'-10' HT.	
LI	1	LAGERSTROEMIA INDICA 'CHEROKEE CHIEF'	CREPE MYRTLE	8'-10' HT.	3 -5 STEMS
PM	2	PRUNUS MUME 'PEGGY CLARKE'	WILLOW OAK	2" CAL., 8'-10' HT.	
CF	8	CALYCANTHUS FLORIDUS	SWEET SHRUB	24"	
RU	14	RAPHEOLEPSIS UMBELLATA 'MAJESTIC BEAUTY'	INDIA HAWTHORNE	24"	
LC	6	LOROPETALUM CHINENSIS 'PURPLE DIAMOND'	LOROPETALUM	24"	
ICBN	39	ILEX CORNUTA 'BURFORDII NANA'	DWARF BURFORD HOLLY	24"	
IG	10	ILEX GLABBRA	INKBERRY HOLLY	24"	
ICC	7	ILEX CORNUTA CONVEXA	CHINESE HOLLY	24"	
MC	47	MYRICA CERIFERA	WAX MYRTLE	36"	

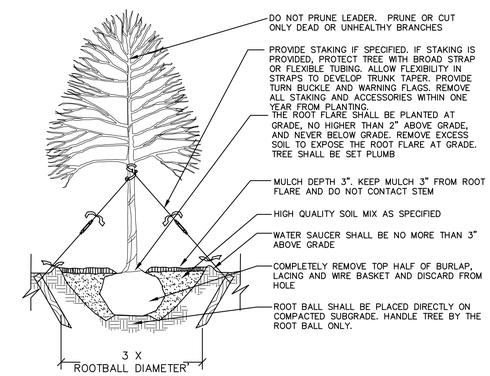

DECIDUOUS TREE PLANTING

NOT TO SCALE

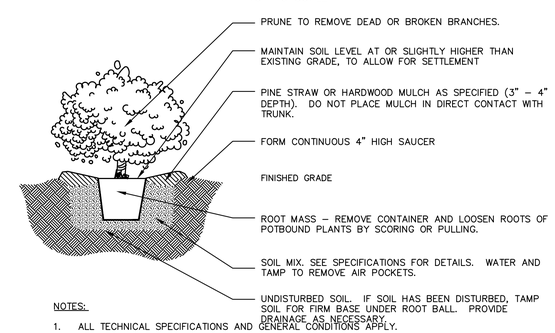

NOTES:

1. ALL TECHNICAL SPECIFICATIONS AND GENERAL CONDITIONS APPLY.
2. REMOVE ALL TAGS, TWINE OR OTHER NON-BIODEGRADABLE MATERIALS ATTACHED TO PLANT OR ROOT MASS.

SHRUB PLANTING

NOT TO SCALE

Village Green Land Design
1149 EXECUTIVE CIRCLE
CARY, NC 27511
P: 919.624.4468

ELIZABETH HEIGHTS SUBDIVISION
AMENITY CENTER
CONSTRUCTION DRAWINGS

ROLESVILLE, NC

LANDSCAPE PLAN

SUBMITTAL:	DRAWN BY:	CHECKED BY:	DATE:
1ST SUBMITTAL	TMB	TMB	2020.01.23
2ND SUBMITTAL	TMB	TMB	2020.08.25

SEALED BY:

NORTH CAROLINA LANDSCAPE ARCHITECT 1200 TERRENCE MICHAEL BOYLAN REGISTERED

2020.08.25

L-100

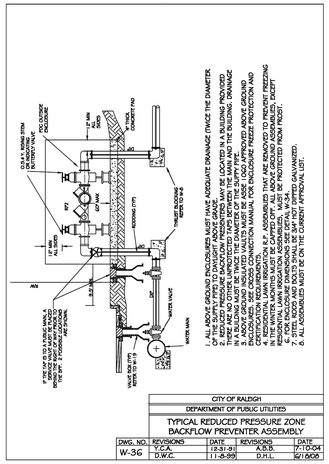

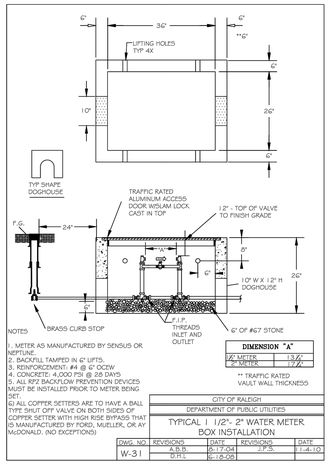

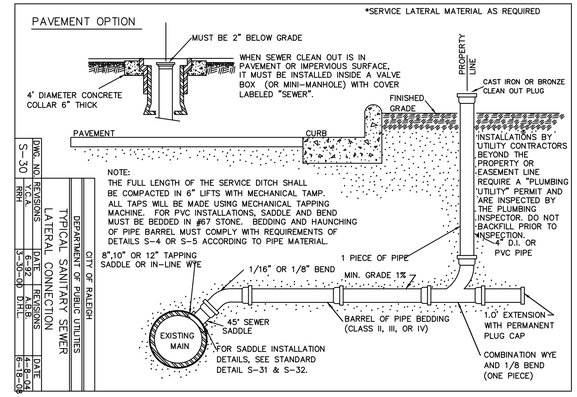

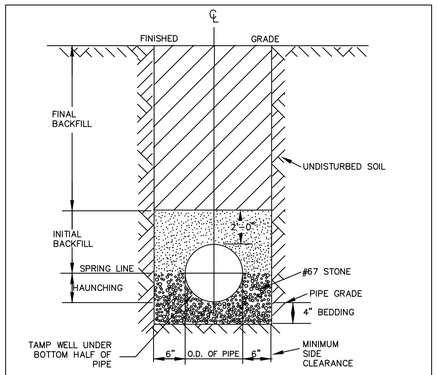

TYPICAL TRENCH BOTTOM DIMENSIONS FOR SDR 35 PVC GRAVITY PIPE

NOTES:
1. FOR TRENCHES REQUIRING SHORING AND BRACING, DIMENSIONS SHALL BE TAKEN FROM THE INSIDE FACE OF THE SHORING AND BRACING.
2. NO ROCKS OR BOULDERS 4" OR LARGER TO BE USED IN INITIAL BACKFILL.
3. ALL BACKFILL MATERIAL SHALL BE SUITABLE NATIVE MATERIAL.
4. BACKFILL SHALL BE TAMPED IN 6" LIFTS IN TRAFFIC AREAS, 12" IN NON-TRAFFIC AREAS.

CITY OF RALEIGH
DEPARTMENT OF PUBLIC UTILITIES
TRENCH BOTTOM DIMENSIONS AND BACKFILLING REQUIREMENTS FOR PVC GRAVITY SEWER MAIN

DWG. NO.	REVISIONS	DATE	REVISIONS	DATE
S-5	TO NOTES	3-1-87	D.W.C.	9-3-99
		7-2-82	RRH	3-30-00

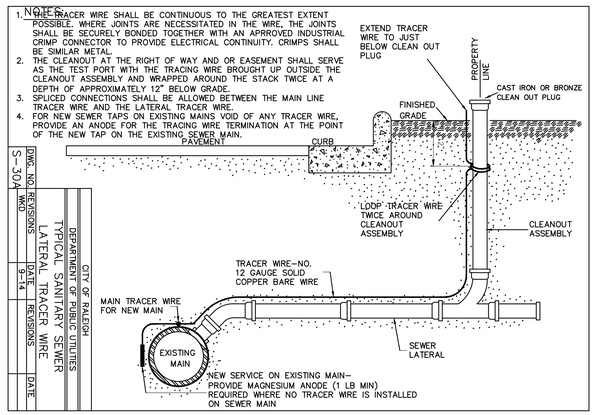

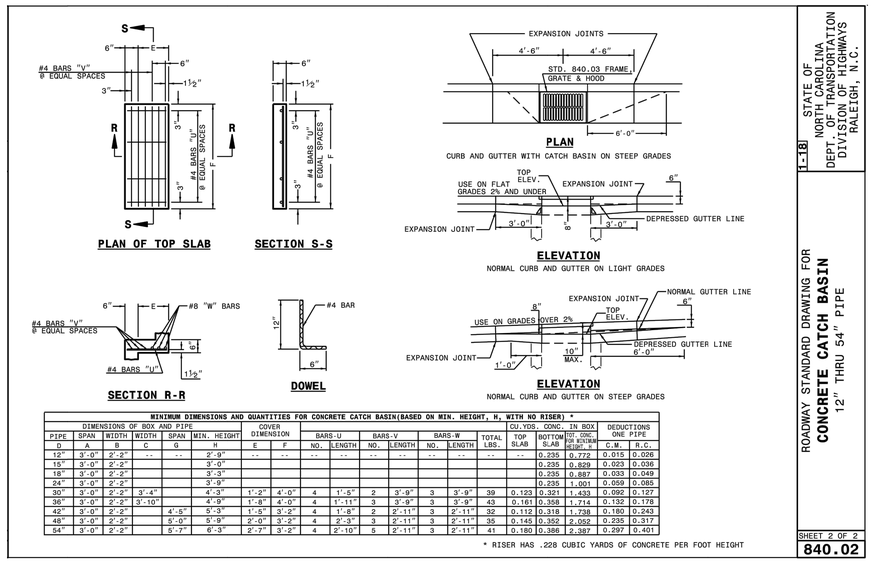

MINIMUM DIMENSIONS AND QUANTITIES FOR CONCRETE CATCH BASIN(BASED ON MIN. HEIGHT, H, WITH NO RISER) *

DIMENSIONS OF BOX AND PIPE						COVER DIMENSION		BARS-U		BARS-V		BARS-W		TOTAL LBS.	CU.YDS. CONC. IN BOX		DEDUCTIONS ONE PIPE	
PIPE D	SPAN A	WIDTH B	WIDTH C	SPAN G	MIN. HEIGHT H	E	F	NO.	LENGTH	NO.	LENGTH	NO.	LENGTH		TOP SLAB	BOTTOM SLAB	TOT. CONC. BETWEEN HEIGHT. H	C.M.	R.C.
12"	3'-0"	2'-2"	--	--	2'-9"	--	--	--	--	--	--	--	--	--	--	0.235	0.772	0.015	0.026
15"	3'-0"	2'-2"			3'-0"											0.235	0.829	0.023	0.036
18"	3'-0"	2'-2"			3'-3"											0.235	0.887	0.033	0.049
24"	3'-0"	2'-2"			3'-9"											0.235	1.001	0.059	0.085
30"	3'-0"	2'-2"	3'-4"		4'-3"	1'-2"	4'-0"	4	1'-5"	2	3'-9"	3	3'-9"	39	0.123	0.321	1.433	0.092	0.127
36"	3'-0"	2'-2"	3'-10"		4'-9"	1'-8"	4'-0"	4	1'-11"	3	3'-9"	3	3'-9"	43	0.161	0.358	1.714	0.132	0.178
42"	3'-0"	2'-2"		4'-5"	5'-3"	1'-5"	3'-2"	4	1'-8"	2	2'-11"	3	2'-11"	32	0.112	0.318	1.738	0.180	0.243
48"	3'-0"	2'-2"		5'-0"	5'-9"	2'-0"	3'-2"	4	2'-3"	3	2'-11"	3	2'-11"	35	0.145	0.352	2.052	0.235	0.317
54"	3'-0"	2'-2"		5'-7"	6'-3"	2'-7"	3'-2"	4	2'-10"	5	2'-11"	3	2'-11"	41	0.180	0.386	2.387	0.297	0.401

* RISER HAS .228 CUBIC YARDS OF CONCRETE PER FOOT HEIGHT

STATE OF NORTH CAROLINA
DEPT. OF TRANSPORTATION
DIVISION OF HIGHWAYS
RALEIGH, N.C.

1-18

ROADWAY STANDARD DRAWING FOR
CONCRETE CATCH BASIN
12" THRU 54" PIPE

SHEET 2 OF 2
840.02

DT3Pc-MD3P33MSV03 6" VAR. HEIGHT SLOT DRAIN

R1

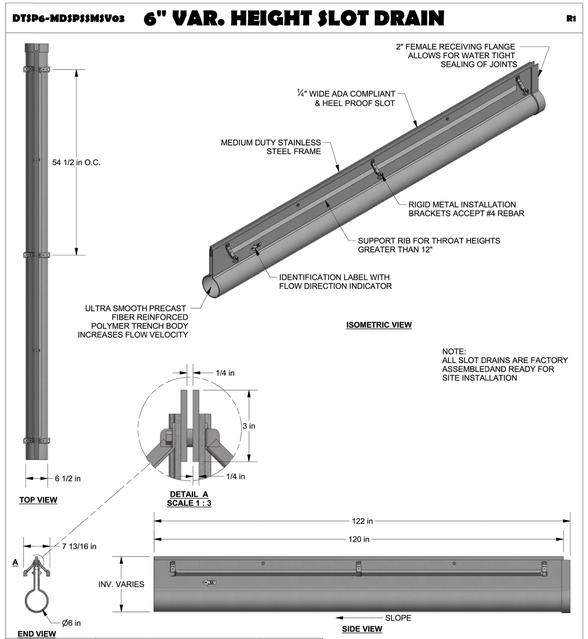

TRENCH MATERIAL	FIBER REINFORCED POLYMER
FRAME MATERIAL	T304 STAINLESS STEEL
FRAME COATING	NONE
ANCHOR STUDS	N/A
INSTALL DEVICE	RIGID STAMPED METAL FOR #4 BARS
LOAD RATING	MEDIUM DUTY
SLOPE	0.5% TYP (CUSTOM SLOPE AVAILABLE)

STANDARD TOLERANCES
0 = +/-0.25
0.0 = +/-0.25
0.00 = +/- 0.13

Dura Trench manufactured by Eric'ness
574c Industrial Way N.
Dallas, GA 30132
PH: 770-505-6575
www.trenchdrain.net

REV.NO.	DESCRIPTIONS

REVISIONS

PRELIMINARY
NOT RELEASED FOR CONSTRUCTION
01/29/2020

NORTH CAROLINA PROFESSIONAL ENGINEER SEAL 027388 08/27/2020 SAYAN LAHIRI
Bateman Civil Survey Company
Engineers • Surveyors • Planners
2524 Reliance Avenue, Apex, North Carolina 27539
Phone: 919.577.1080 Fax: 919.577.1081
NCBELS FIRM No. C-2378

ELIZABETH SPRINGS

ELIZABETH SPRINGS
CONSTRUCTION DRAWINGS
1205 AVERETTE ROAD
WAKE FOREST, NC 27587
WAKE COUNTY, NC

WATER/SEWER/STORM DETAILS

Project Engineer:	SL
Designed By:	WKB
Drawn By:	WKB
Checked By:	SL
Scale:	NTS
Date:	08/27/2020
Project Number:	.170348

SHEET
C801

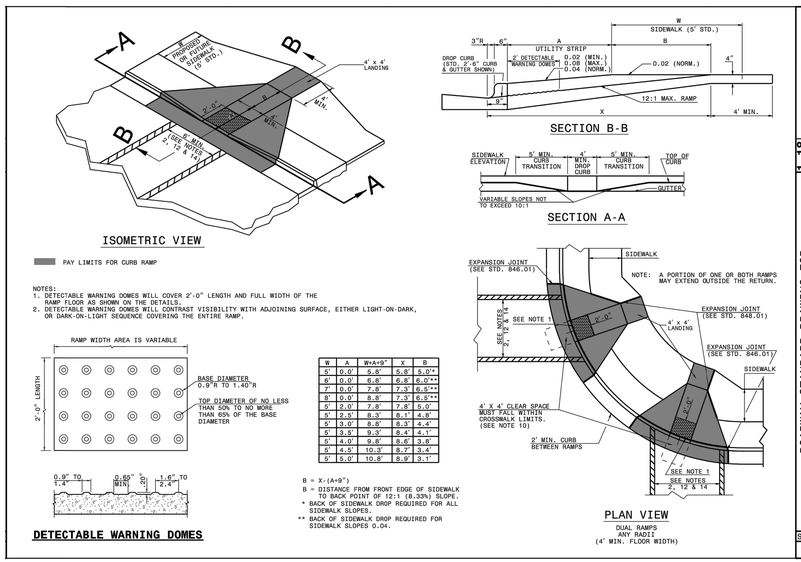

W	A	W=A+9"	X	B
5'	0.0'	5.8'	5.8'	5.0'*
6'	0.0'	6.8'	6.8'	6.0'**
7'	0.0'	7.8'	7.3'	6.5'**
8'	0.0'	8.8'	7.3'	6.5'**
5'	2.0'	7.8'	7.8'	5.0'
5'	2.5'	8.3'	8.1'	4.8'
5'	3.0'	8.8'	8.3'	4.4'
5'	3.5'	9.3'	8.4'	4.1'
5'	4.0'	9.8'	8.6'	3.8'
5'	4.5'	10.3'	8.7'	3.4'
5'	5.0'	10.8'	8.9'	3.1'

STATE OF NORTH CAROLINA
DEPT. OF TRANSPORTATION
DIVISION OF HIGHWAYS
RALEIGH, N.C.

1-18

ROADWAY STANDARD DRAWING FOR
CURB RAMP
PROPOSED CURB AND GUTTER

SHEET 1 OF 3
848.05

NOTES:
1. TRANSVERSE EXPANSION JOINTS TO BE A MAXIMUM OF 50 FEET.
2. ALL CONCRETE TO BE 3000 PSI AND FINISHED WITH CURING COMPOUND.
3. A 6 INCH DEPTH IS REQUIRED AT LOCATIONS OF DRIVEWAY CROSSINGS, AT STREET INJTERSECTIONS (ALONG THE LENGTH OF RADIUS CURB RETURNS), AND IN THE HANDICAP RAMPS.

CITY OF RALEIGH
STANDARD DETAIL
REVISIONS DATE: 8/1/18 NOT TO SCALE
CONCRETE SIDEWALK
T-30.01

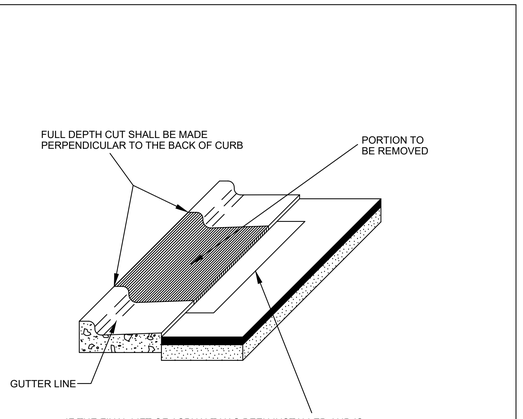

NOTES:
1. CURB AND GUTTER SECTION SHALL BE REMOVED IN ACCORDANCE WITH DRIVEWAY WIDTH APPROVED BY THE CITY.
2. IF PERPENDICULAR CUT IS LESS THAN 5' FROM NEXT JOINT, THEN THE PARALLEL CUT SHALL BE MADE TO THAT JOINT.
3. THIS METHOD IS NOT ALLOWED IN NEW ROADWAY CONSTRUCTION.

CITY OF RALEIGH
STANDARD DETAIL
REVISIONS DATE: 8/1/18 NOT TO SCALE
STANDARD METHOD OF REMOVING EXISTING CURB (FOR A DRIVEWAY APRON INSTALLATION)
T-10.24

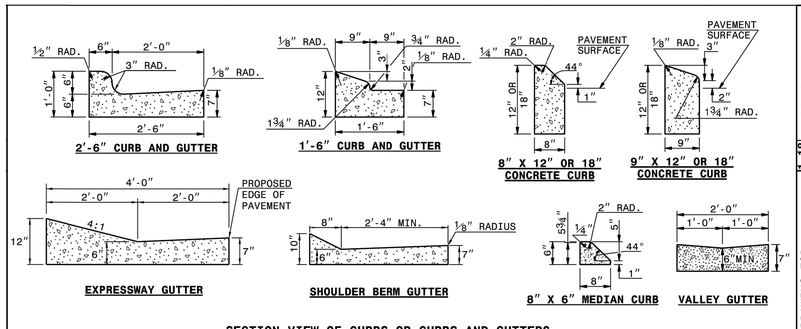

GENERAL NOTES:
- PLACE CONTRACTION JOINTS AT 10' INTERVALS, EXCEPT THAT A 15' SPACING MAY BE USED WHEN A MACHINE IS USED OR WHEN SATISFACTORY SUPPORT FOR THE FACE FORM CAN BE OBTAINED WITHOUT THE USE OF TEMPLATES AT 10' INTERVALS.
- JOINT SPACING MAY BE ALTERED IF REQUIRED BY THE ENGINEER.
- CONTRACTION JOINTS MAY BE INSTALLED WITH THE USE OF TEMPLATES OR FORMED BY OTHER APPROVED METHODS. CONSTRUCT NON-TEMPLATE FORMED JOINTS A MIN. OF 1½" DEEP.
- FILL ALL CONSTRUCTION JOINTS, EXCEPT IN 8"x6" MEDIAN CURB, WITH JOINT FILLER AND SEALER.
- SPACE EXPANSION JOINTS AT 90' INTERVALS AND ADJACENT TO ALL RIGID OBJECTS.

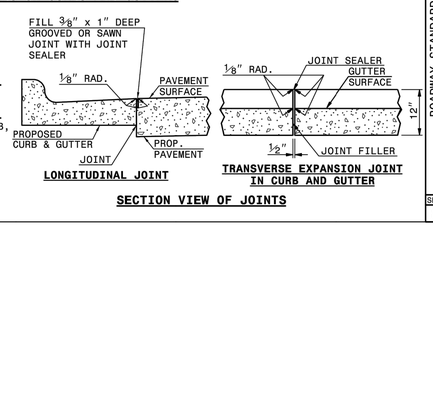

STATE OF NORTH CAROLINA
DEPT. OF TRANSPORTATION
DIVISION OF HIGHWAYS
RALEIGH, N.C.

1-18

ROADWAY STANDARD DRAWING FOR
CONCRETE CURB, GUTTER AND CURB & GUTTER

SHEET 1 OF 3
846.01

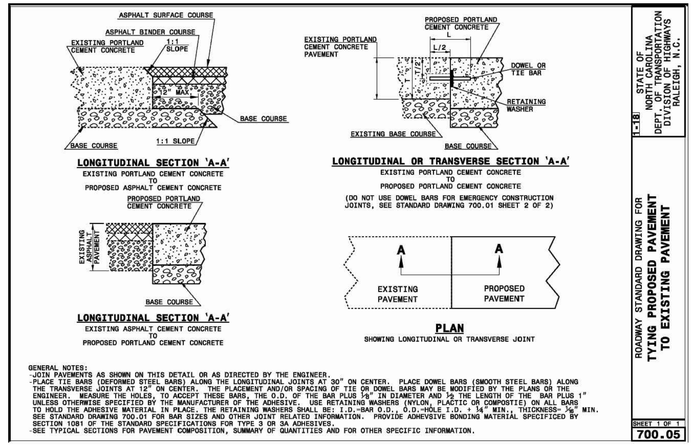

GENERAL NOTES:
- JOIN PAVEMENTS AS SHOWN ON THIS DETAIL OR AS DIRECTED BY THE ENGINEER.
- PLACE TIE BARS (DEFORMED STEEL BARS) ALONG THE LONGITUDINAL JOINTS AT 30" ON CENTER. PLACE DOWEL BARS (SMOOTH STEEL BARS) ALONG THE TRANSVERSE JOINTS AT 12" ON CENTER. THE PLACEMENT AND/OR SPACING OF TIE OR DOWEL BARS MAY BE MODIFIED BY THE PLANS OR THE ENGINEER. MEASURE THE HOLES, TO ACCEPT THESE BARS, THE O.D. OF THE BAR PLUS ¼" IN DIAMETER AND ½ THE LENGTH OF THE . BAR PLUS 1" UNLESS OTHERWISE SPECIFIED BY THE MANUFACTURER OF THE ADHESIVE. USE RETAINING WASHERS (NYLON, PLACTIC OR COMPOSTIE) ON ALL BARS TO HOLD THE ADHESIVE MATERIAL IN PLACE. THE RETAINING WASHERS SHALL BE: I.D.=BAR O.D., O.D.=HOLE I.D. + 1/4" MIN., THICKNESS= 3/8" MIN. SEE STANDARD DRAWING 700.01 FOR BAR SIZES AND OTHER JOINT RELATED INFORMATION. PROVIDE ADHEVSIVE BONDING MATERIAL SPECIFICED BY SECTION 1081 OF THE STANDARD SPECIFICATIONS FOR TYPE 3 OR 3A ADHESIVES.
- SEE TYPICAL SECTIONS FOR PAVEMENT COMPOSITION, SUMMARY OF QUANTITIES AND FOR OTHER SPECIFIC INFORMATION.

STATE OF NORTH CAROLINA
DEPT. OF TRANSPORTATION
DIVISION OF HIGHWAYS
RALEIGH, N.C.

1-18

ROADWAY STANDARD DRAWING FOR
TYING PROPOSED PAVEMENT TO EXISTING PAVEMENT

SHEET 1 OF 1
700.05

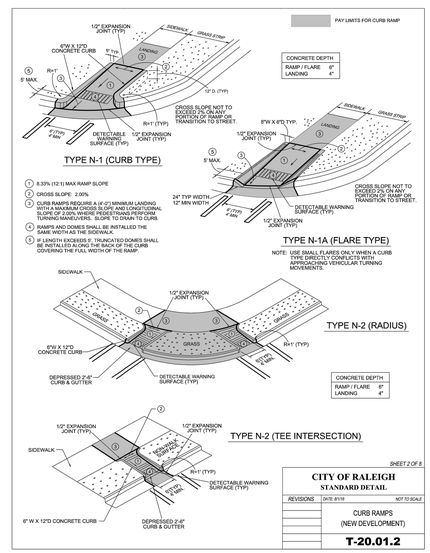

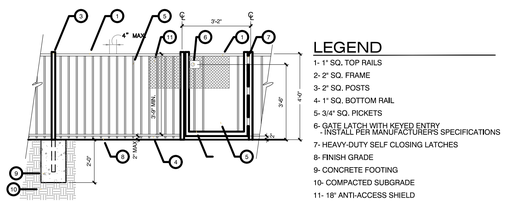

NOTE: GATES SHALL BE SELF-CLOSING AND POSITIVE LATCHING.

FENCE & GATE ELEVATION

REV.NO.	DESCRIPTIONS	

REVISIONS

PRELIMINARY
NOT RELEASED FOR CONSTRUCTION
01/29/2020

ELIZABETH SPRINGS

Bateman Civil Survey Company
Engineers • Surveyors • Planners
2524 Reliance Avenue, Apex, North Carolina 27539
Phone: 919.577.1080 Fax: 919.577.1081
NCBELS FIRM No. C-2378

ELIZABETH SPRINGS
CONSTRUCTION DRAWINGS
1205 AVERETTE ROAD
WAKE FOREST, NC 27587
WAKE COUNTY, NC

SITE/NCDOT DETAILS

Project Engineer:	SL
Designed By:	WKB
Drawn By:	WKB
Checked By:	SL
Scale:	NTS
Date:	08/27/2020
Project Number:	.170348

SHEET
C802

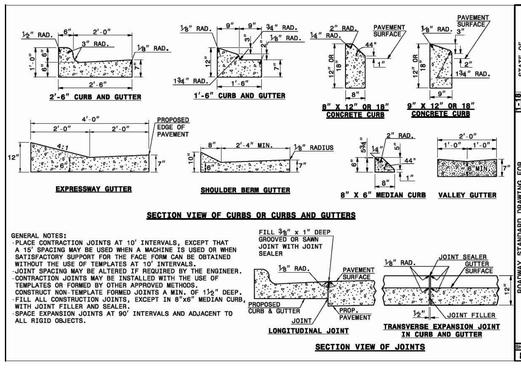

STATE OF NORTH CAROLINA DEPT. OF TRANSPORTATION DIVISION OF HIGHWAYS RALEIGH, N.C.

1-18

ROADWAY STANDARD DRAWING FOR **CONCRETE CURB, GUTTER AND CURB & GUTTER**

SHEET 1 OF 3 **846.01**

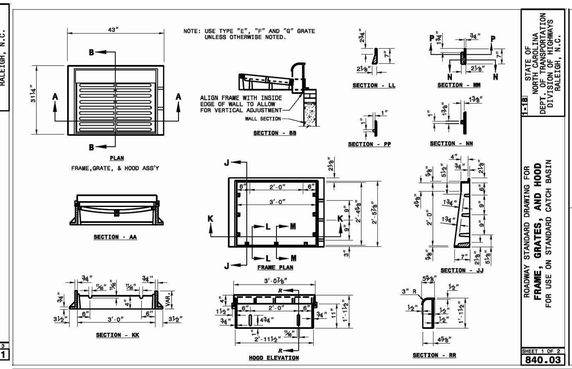

STATE OF NORTH CAROLINA DEPT. OF TRANSPORTATION DIVISION OF HIGHWAYS RALEIGH, N.C.

1-18

ROADWAY STANDARD DRAWING FOR **FRAME, GRATES, AND HOOD** FOR USE ON STANDARD CATCH BASIN

SHEET 1 OF 2 **840.03**

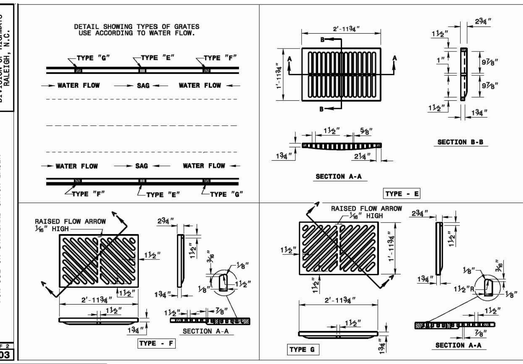

STATE OF NORTH CAROLINA DEPT. OF TRANSPORTATION DIVISION OF HIGHWAYS RALEIGH, N.C.

1-18

ROADWAY STANDARD DRAWING FOR **FRAME, GRATES, AND HOOD** FOR USE ON STANDARD CATCH BASIN

SHEET 2 OF 2 **840.03**

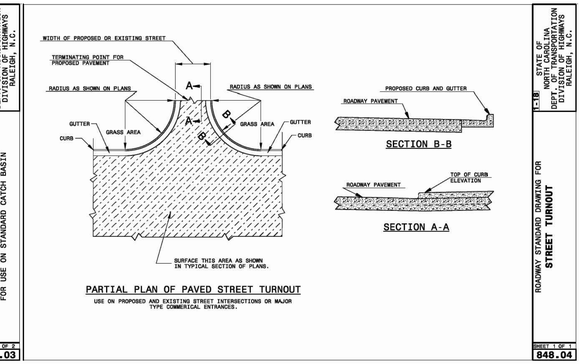

STATE OF NORTH CAROLINA DEPT. OF TRANSPORTATION DIVISION OF HIGHWAYS RALEIGH, N.C.

1-18

ROADWAY STANDARD DRAWING FOR **STREET TURNOUT**

SHEET 1 OF 1 **848.04**

NOTES:

1. CONSTRUCT THE RAMP SURFACE TO BE STABLE, FIRM, AND SLIP RESISTANT. CONSTRUCT THE CURB RAMP TYPE AS SHOWN IN THE PAVEMENT MARKING PLANS OR AS DIRECTED BY THE ENGINEER.
2. LOCATE CURB RAMPS AND PLACE PEDESTRIAN CROSSWALK MARKINGS AS SHOWN IN THE PAVEMENT MARKING PLANS. WHEN FIELD ADJUSTMENTS REQUIRE MOVING CURB RAMPS OR MARKINGS AS SHOWN, CONTACT THE SIGNING AND DELINEATION UNIT OR LOCATE AS DIRECTED BY THE ENGINEER.
3. COORDINATE THE CURB RAMP AND THE PEDESTRIAN CROSSWALK MARKINGS SO A 4'x4' CLEAR SPACE AT THE BASE OF THE CURB RAMP WILL FALL WITHIN THE PEDESTRIAN CROSSWALK LINES.
4. SET BACK DISTANCE FROM INSIDE CROSSWALK MARKING TO NEAREST EDGE OF TRAVEL LANE IS 4' MINIMUM.
5. REFER TO THE PAVEMENT MARKING PLANS FOR STOP BAR LOCATIONS AT SIGNALIZED INTERSECTIONS. IF A PAVEMENT MARKING PLAN IS NOT PROVIDED, CONTACT THE SIGNAL DESIGN SECTION FOR THE STOP BAR LOCATIONS OR LOCATE AS DIRECTED BY THE ENGINEER.
6. TERMINATE PARKING A MINIMUM OF 20' BACK OF A PEDESTRIAN CROSSWALK.
7. CONSTRUCT CURB RAMPS A MINIMUM OF 4' WIDE.
8. CONSTRUCT THE RUNNING SLOPE OF THE RAMP 8.33% MAXIMUM.
9. ALLOWABLE CROSS SLOPE ON SIDEWALKS AND CURB RAMPS WILL BE 2% MAXIMUM.
10. CONSTRUCT THE SIDE FLARE SLOPE A MAXIMUM OF 10% MEASURED ALONG THE CURB LINE.
11. CONSTRUCT THE COUNTER SLOPE OF THE GUTTER OR STREET AT THE BASE OF THE CURB RAMP A MAXIMUM OF 5% AND MAINTAIN A SMOOTH TRANSITION.
12. CONSTRUCT LANDINGS FOR SIDEWALK A MINIMUM OF 4'x4' WITH A MAXIMUM SLOPE OF 2% IN ANY DIRECTION. CONSTRUCT LANDINGS FOR MEDIAN ISLANDS A MINIMUM OF 5'x5' WITH A MAXIMUM SLOPE OF 2% IN ANY DIRECTION.
13. TO USE A MEDIAN ISLAND AS A PEDESTRIAN REFUGE AREA, MEDIAN ISLANDS WILL BE A MINIMUM OF 6' WIDE. CONSTRUCT MEDIAN ISLANDS TO PROVIDE PASSAGE OVER OR THROUGHT THE ISLAND.
14. SMALL CHANNELIZATION ISLANDS THAT CAN NOT PROVIDE A 5'X5' LANDING AT THE TOP OF A RAMPS, WILL BE CUT THROUGH LEVEL WITH THE SURFACE STREET.
15. CURB RAMPS WITH RETURNED CURBS MAY BE USED ONLY WHERE PEDESTRIANS WOULD NOT NORMALLY WALK ACROSS THE RAMP. THE ADJACENT SURFACE IS PLANTING OR OTHER NON-WALKING SURFACE OR THE SIDE APPROACH IS SUBSTANTIALLY OBSTRUCTED.
16. PLACE A ½" EXPANSION JOINT WHERE THE CONCRETE CURB RAMP JOINS THE CURB AS SHOWN IN ROADWAY STANDARD DRAWING 848.01
17. PLACE ALL PEDESTRIAN PUSH BUTTON ACTUATORS AND CROSSING SIGNALS AS SHOWN IN THE PLANS OR AS SHOWN IN THE MUTCD.
18. CURB RAMPS THROUGH MEDIAN ISLANDS, SINGLE RAMPS AT DUAL CROSSWALKS OR LIMITED R/W SITUATIONS, WILL BE HANDLED BY SPECIAL DETAILS. CONTACT THE CONTRACT STANDARDS AND DEVELOPMENT UNIT FOR THE DETAILS OR FOR A SPECIAL DESIGN.

STATE OF NORTH CAROLINA DEPT. OF TRANSPORTATION DIVISION OF HIGHWAYS RALEIGH, N.C.

1-18

ROADWAY STANDARD DRAWING FOR **CURB RAMPS**

NOTES

SHEET 2 OF 3 **848.05**

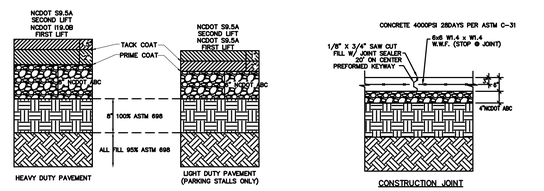

CONSTRUCTION JOINT

NOTES:

SAW CUT JOINTS WITHIN 24 HOURS. CLEAN AND SEAL FULL DEPTH AFTER SEVEN DAYS.

C9.9

TRUCK LOADING CONCRETE DECK DETAIL

C9.9

REV.NO.	DESCRIPTIONS	

REVISIONS

PRELIMINARY
NOT RELEASED FOR CONSTRUCTION
01/29/2020

NORTH CAROLINA PROFESSIONAL SEAL 019398 ENGINEER 8/27/2020 WILLIAM K. LEE

ELIZABETH SPRINGS

Bateman Civil Survey Company
Engineers • Surveyors • Planners
2524 Reliance Avenue, Apex, North Carolina 27539
Phone: 919.577.1080 Fax: 919.577.1081
NCBELS FIRM No. C-2378

ELIZABETH SPRINGS
CONSTRUCTION DRAWINGS
1205 AVERETTE ROAD
WAKE FOREST, NC 27587
WAKE COUNTY, NC

ROAD DETAILS

Project Engineer:	SL
Designed By:	WKB
Drawn By:	WKB
Checked By:	SL
Scale:	NTS
Date:	08/27/2020
Project Number:	.170348

SHEET
C803