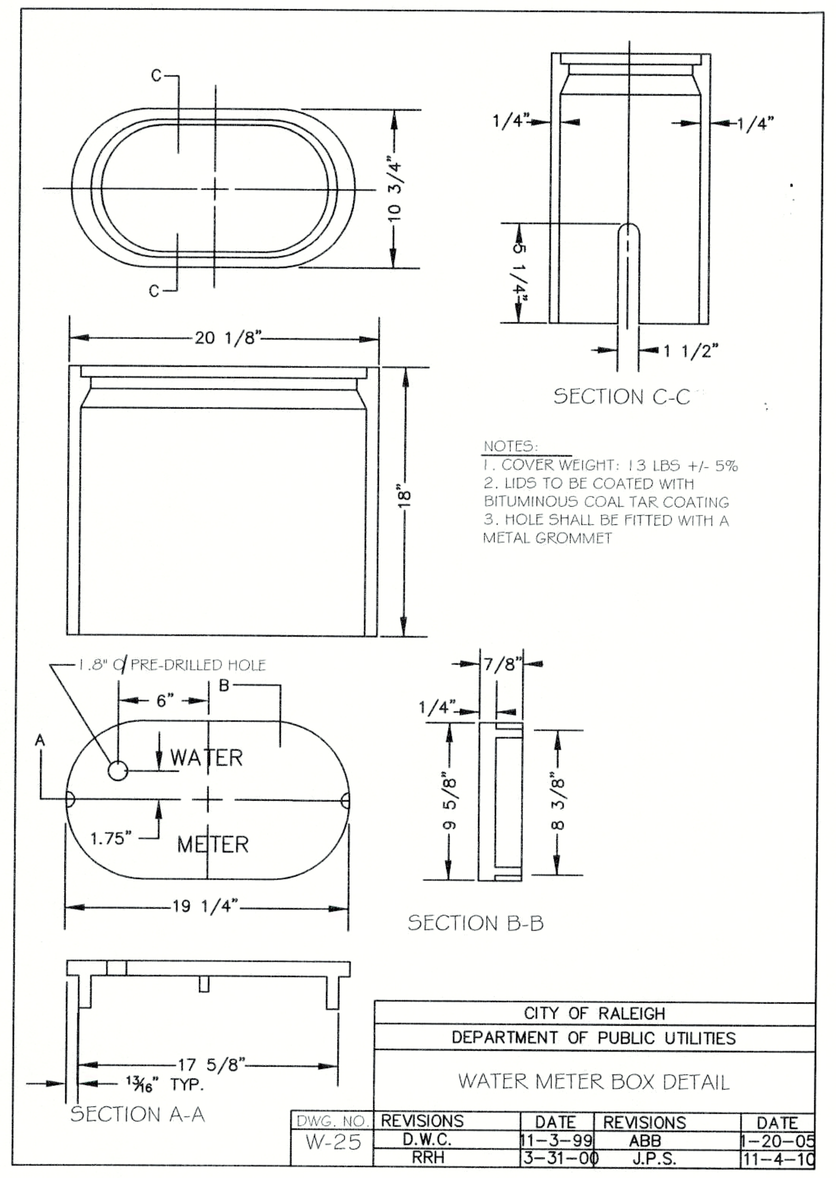

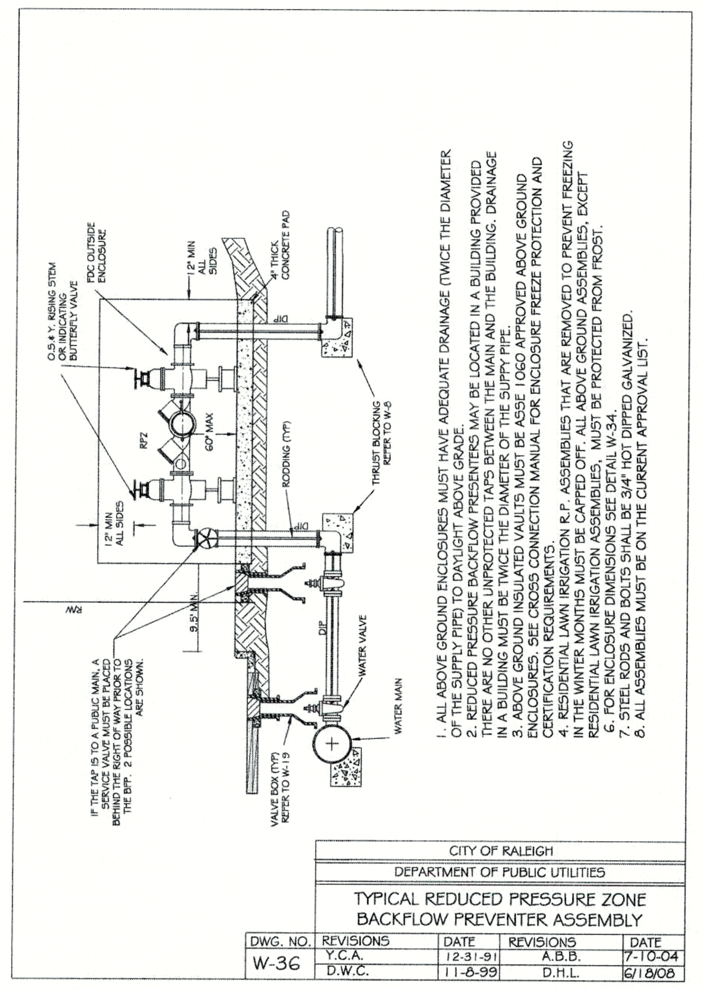

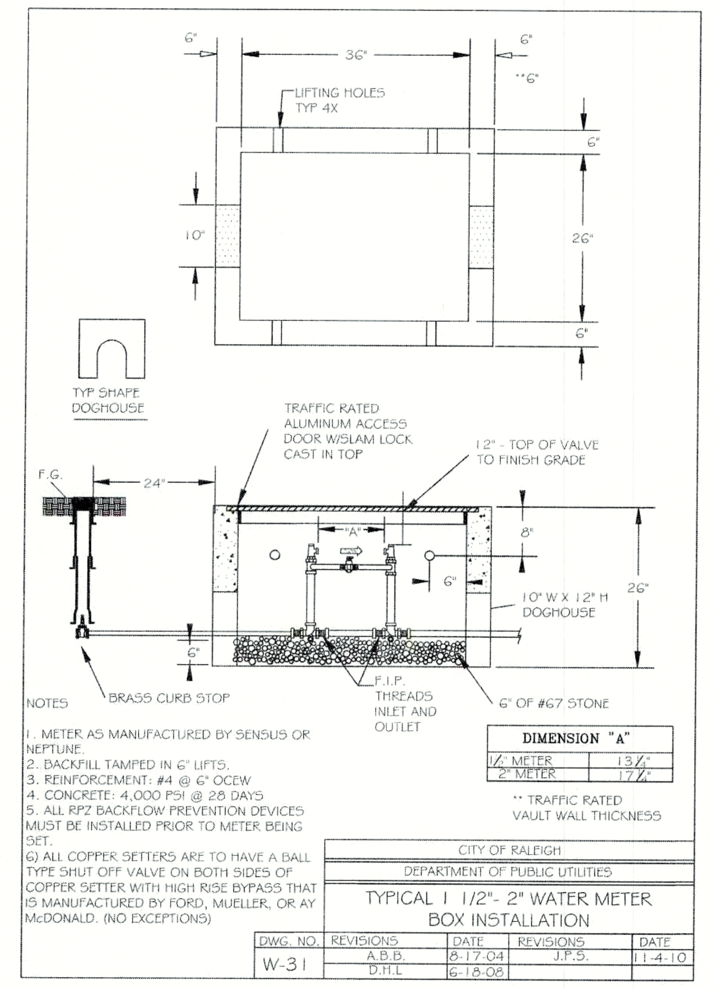

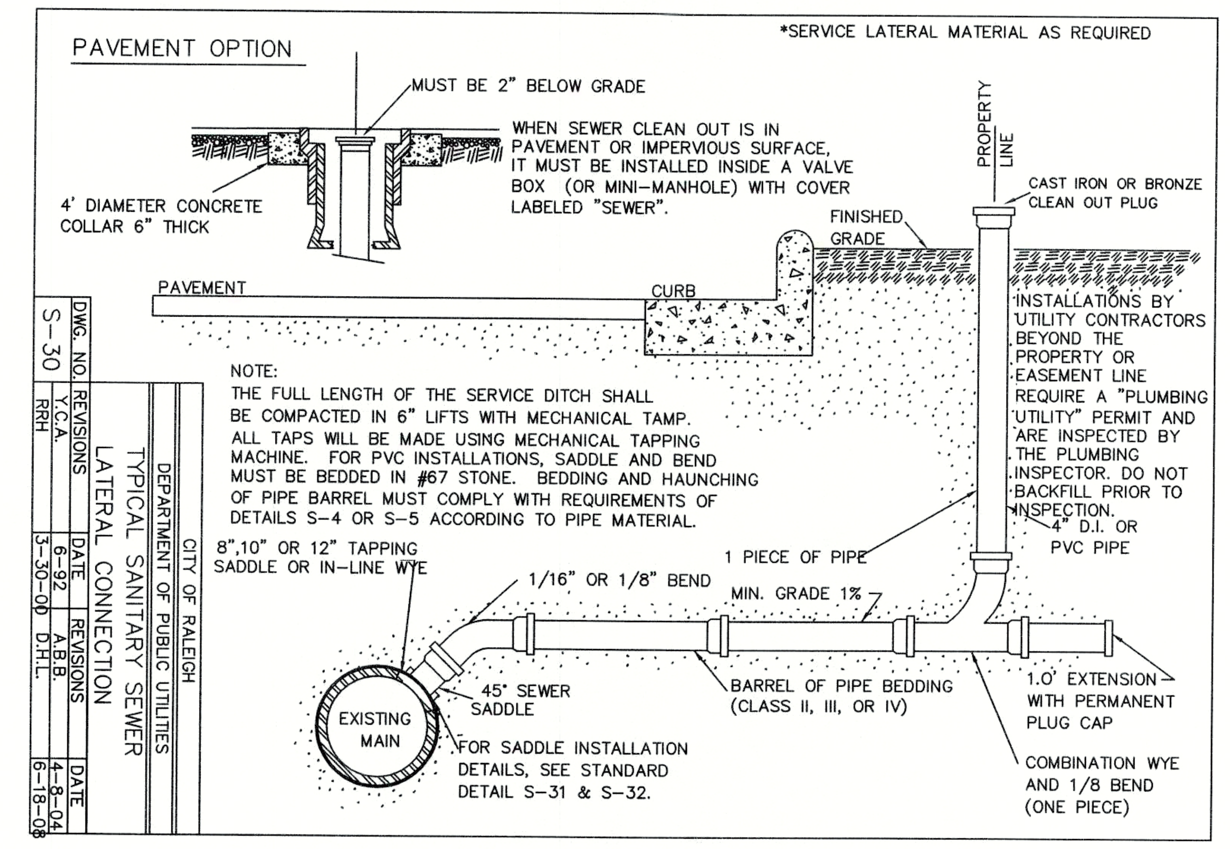

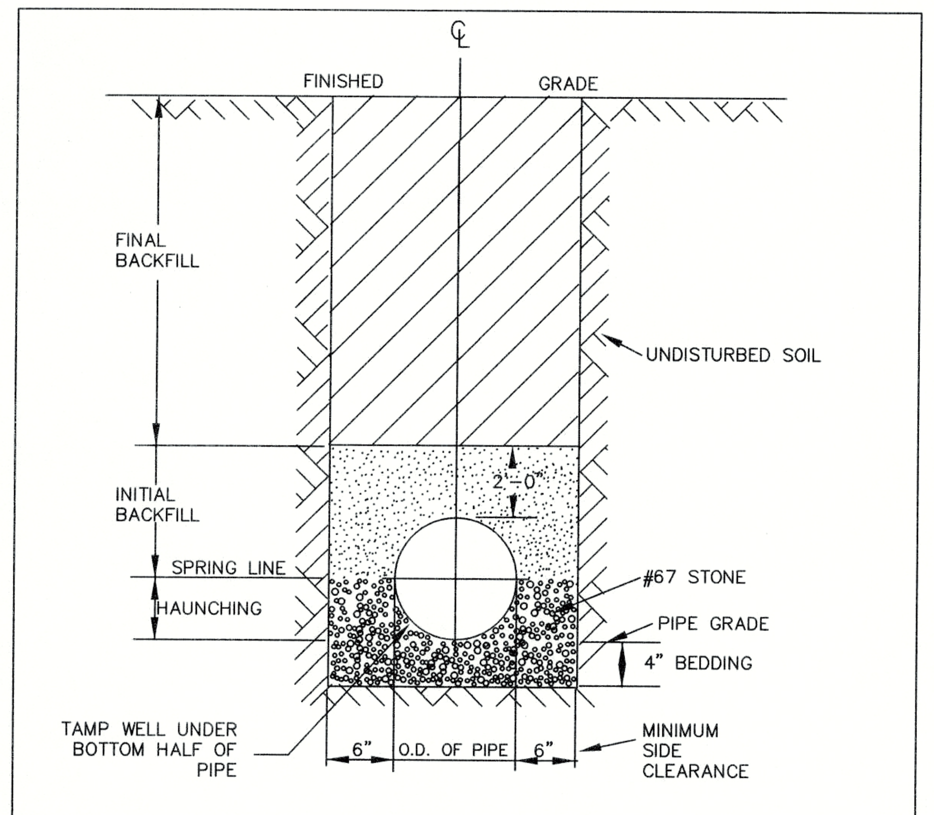

TYPICAL TRENCH BOTTOM DIMENSIONS FOR SDR 35 PVC GRAVITY PIPE

NOTES:
1. FOR TRENCHES REQUIRING SHORING AND BRACING, DIMENSIONS SHALL BE TAKEN FROM THE INSIDE FACE OF THE SHORING AND BRACING.
2. NO ROCKS OR BOULDERS 4" OR LARGER TO BE USED IN INITIAL BACKFILL.
3. ALL BACKFILL MATERIAL SHALL BE SUITABLE NATIVE MATERIAL.
4. BACKFILL SHALL BE TAMPED IN 6" LIFTS IN TRAFFIC AREAS, 12" IN NON-TRAFFIC AREAS.

CITY OF RALEIGH
DEPARTMENT OF PUBLIC UTILITIES
TRENCH BOTTOM DIMENSIONS AND BACKFILLING REQUIREMENTS FOR PVC GRAVITY SEWER MAIN

DWG. NO.	REVISIONS	DATE	REVISIONS	DATE
S-5	TO NOTES	3-1-87	D.W.C.	9-3-99
		7-2-82	RRH	3-30-00

NOTES:
1. THE TRACER WIRE SHALL BE CONTINUOUS TO THE GREATEST EXTENT POSSIBLE. WHERE JOINTS ARE NECESSITATED IN THE WIRE, THE JOINTS SHALL BE SECURELY BONDED TOGETHER WITH AN APRROVED INDUSTRIAL CRIMP CONNECTOR TO PROVIDE ELECTRICAL CONTINUITY. CRIMPS SHALL BE SIMILAR METAL.
2. THE CLEANOUT AT THE RIGHT OF WAY AND OR EASEMENT SHALL SERVE AS THE TEST PORT WITH THE TRACING WIRE BROUGHT UP OUTSIDE THE CLEANOUT ASSEMBLY AND WRAPPED AROUND THE STACK TWICE AT A DEPTH OF APPROXIMATELY 12" BELOW GRADE.
3. SPLICED CONNECTIONS SHALL BE ALLOWED BETWEEN THE MAIN LINE TRACER WIRE AND THE LATERAL TRACER WIRE.
4. FOR NEW SEWER TAPS ON EXISTING MAINS VOID OF ANY TRACER WIRE, PROVIDE AN ANODE FOR THE TRACING WIRE TERMINATION AT THE POINT OF THE NEW TAP ON THE EXISTING SEWER MAIN.

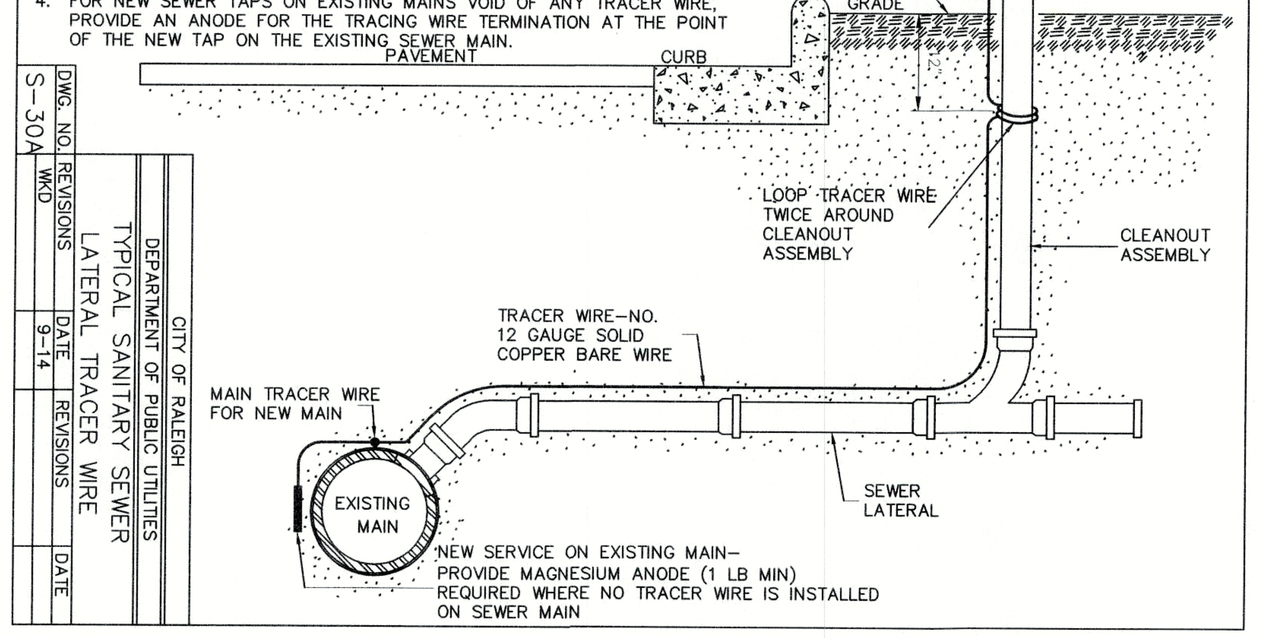

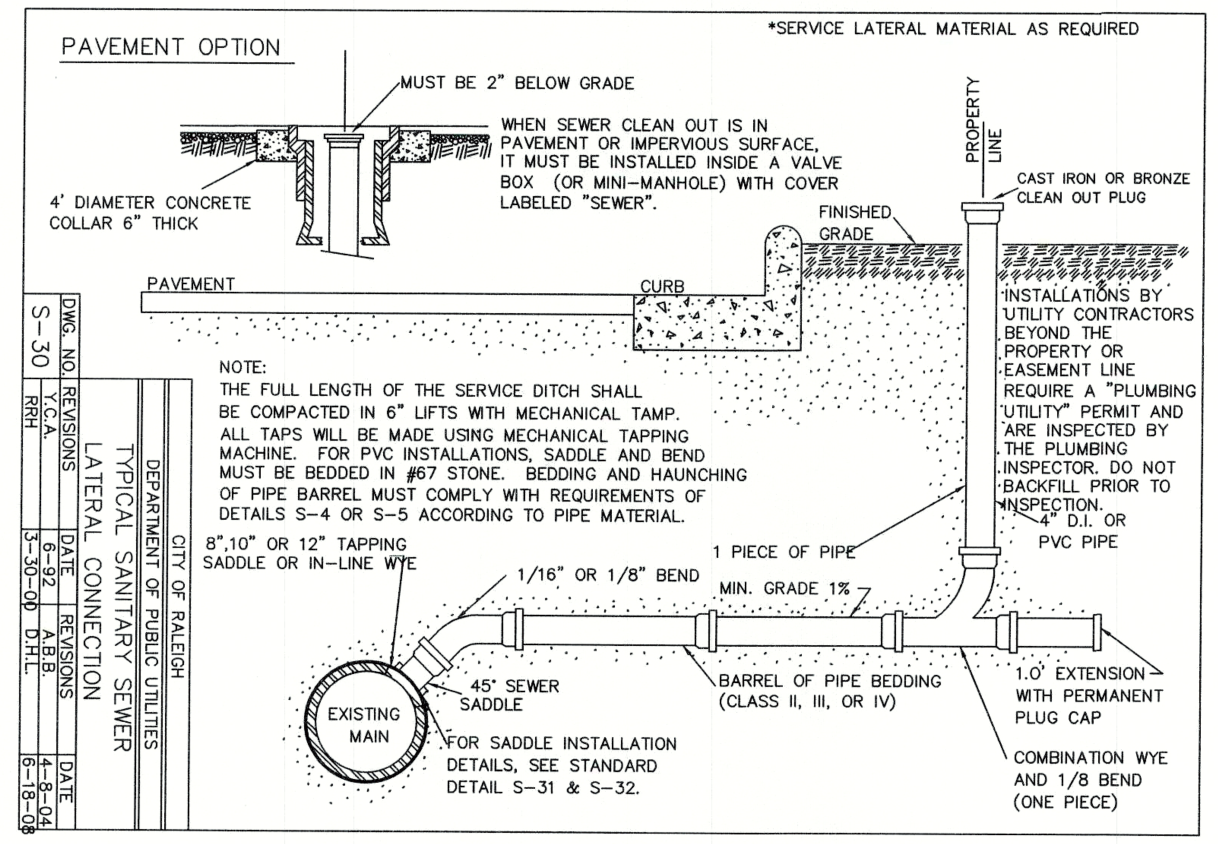

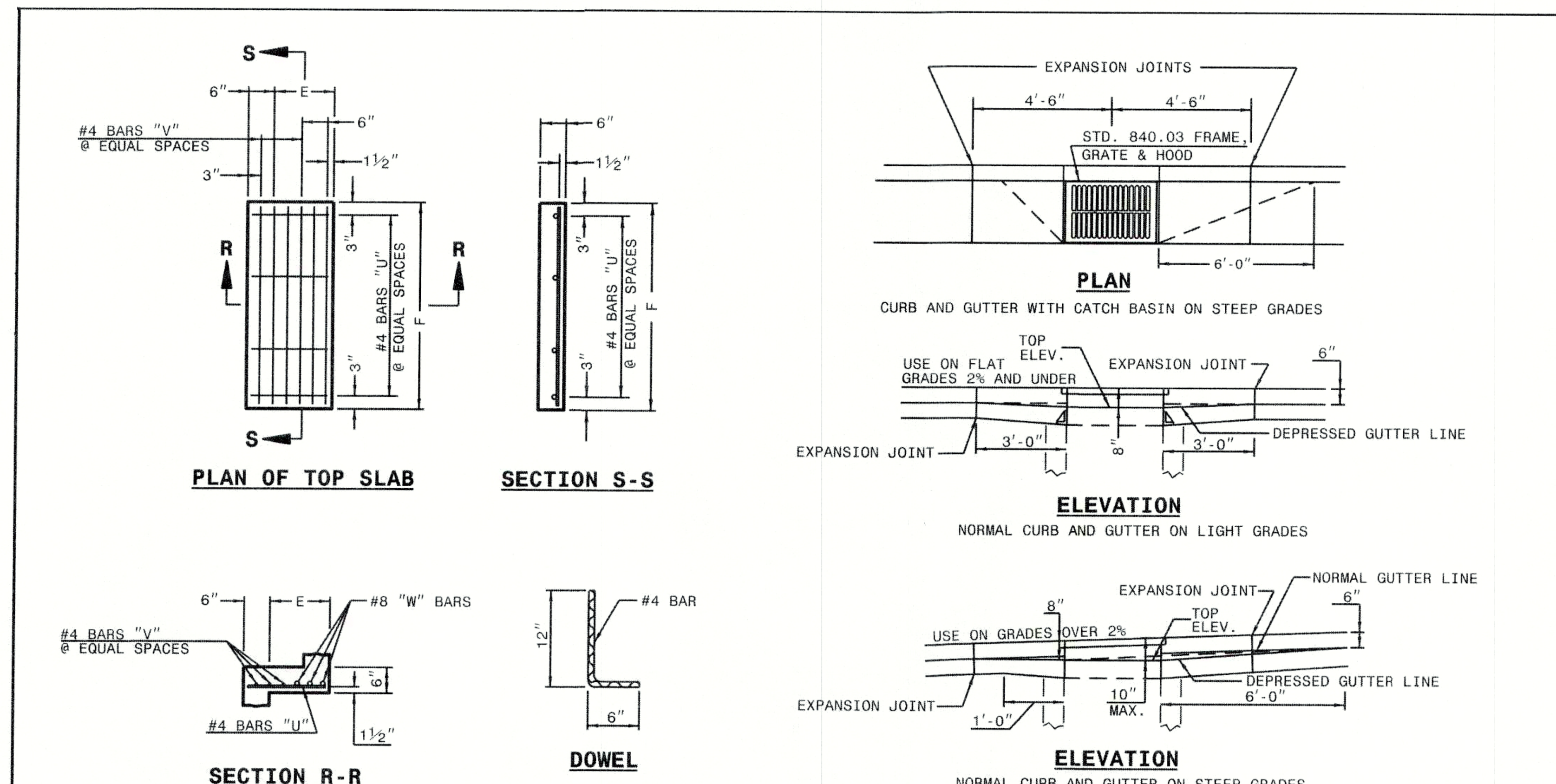

MINIMUM DIMENSIONS AND QUANTITIES FOR CONCRETE CATCH BASIN(BASED ON MIN. HEIGHT, H, WITH NO RISER) *

DIMENSIONS OF BOX AND PIPE						COVER DIMENSION		BARS-U		BARS-V		BARS-W		TOTAL	CU.YDS. CONC. IN BOX			DEDUCTIONS ONE PIPE	
PIPE D	SPAN A	WIDTH B	WIDTH C	SPAN G	MIN. HEIGHT H	E	F	NO.	LENGTH	NO.	LENGTH	NO.	LENGTH	LBS.	TOP SLAB	BOTTOM SLAB	TOT. CONC. FOR MINIMUM HEIGHT, H	C.M.	R.C.
12"	3'-0"	2'-2"	--	--	2'-9"	--	--	--	--	--	--	--	--	--	--	0.235	0.772	0.015	0.026
15"	3'-0"	2'-2"			3'-0"											0.235	0.829	0.023	0.036
18"	3'-0"	2'-2"			3'-3"											0.235	0.887	0.033	0.049
24"	3'-0"	2'-2"			3'-9"											0.235	1.001	0.059	0.085
30"	3'-0"	2'-2"	3'-4"		4'-3"	1'-2"	4'-0"	4	1'-5"	2	3'-9"	3	3'-9"	39	0.123	0.321	1.433	0.092	0.127
36"	3'-0"	2'-2"	3'-10"		4'-9"	1'-8"	4'-0"	4	1'-11"	3	3'-9"	3	3'-9"	43	0.161	0.358	1.714	0.132	0.178
42"	3'-0"	2'-2"		4'-5"	5'-3"	1'-5"	3'-2"	4	1'-8"	2	2'-11"	3	2'-11"	32	0.112	0.318	1.738	0.180	0.243
48"	3'-0"	2'-2"		5'-0"	5'-9"	2'-0"	3'-2"	4	2'-3"	3	2'-11"	3	2'-11"	35	0.145	0.352	2.052	0.235	0.317
54"	3'-0"	2'-2"		5'-7"	6'-3"	2'-7"	3'-2"	4	2'-10"	5	2'-11"	3	2'-11"	41	0.180	0.386	2.387	0.297	0.401

* RISER HAS .228 CUBIC YARDS OF CONCRETE PER FOOT HEIGHT

STATE OF NORTH CAROLINA
DEPT. OF TRANSPORTATION
DIVISION OF HIGHWAYS
RALEIGH, N.C.
1-18

ROADWAY STANDARD DRAWING FOR
CONCRETE CATCH BASIN
12" THRU 54" PIPE

SHEET 2 OF 2
840.02

REV.NO.	DESCRIPTIONS	

REVISIONS

NORTH CAROLINA PROFESSIONAL SEAL 20234 ENGINEER THOMAS S. SPEIGHT, JR 2/04/2020

ELIZABETH SPRINGS

Bateman Civil Survey Company
Engineers • Surveyors • Planners
2524 Reliance Avenue, Apex, North Carolina 27539
Phone: 919.577.1080 Fax: 919.577.1081
NCBELS FIRM No. C-2378

ELIZABETH SPRINGS
CONSTRUCTION DRAWINGS
1205 AVERETTE ROAD
WAKE FOREST, NC 27587
WAKE COUNTY, NC

WATER/SEWER/STORM DETAILS

Project Engineer:	TSS
Designed By:	WKB
Drawn By:	WKB
Checked By:	TSS
Scale:	NTS
Date:	01/29/2020
Project Number:	.170348

PRELIMINARY
NOT RELEASED FOR CONSTRUCTION
01/29/2020

SHEET
C801