LEGEND:

- EXISTING POND
- EXISTING WETLANDS
- PROPOSED PHASING LINE
- EXISTING TOWN OF ROLESVILLE ETJ
- EXISTING STREAM
- 50' STREAM AND POND RIPARIAN BUFFER
- DEDICATED PRIMARY PROTECTED OPEN SPACE
- DEDICATED SECONDARY PROTECTED OPEN SPACE
- PROPOSED ASPHALT PAVEMENT
- PROPOSED RIGHT OF WAY
- PROPOSED EASEMENT
- 420 / 418 EXISTING MAJOR / MINOR CONTOUR
- 420 / 418 PROPOSED MAJOR / MINOR CONTOUR

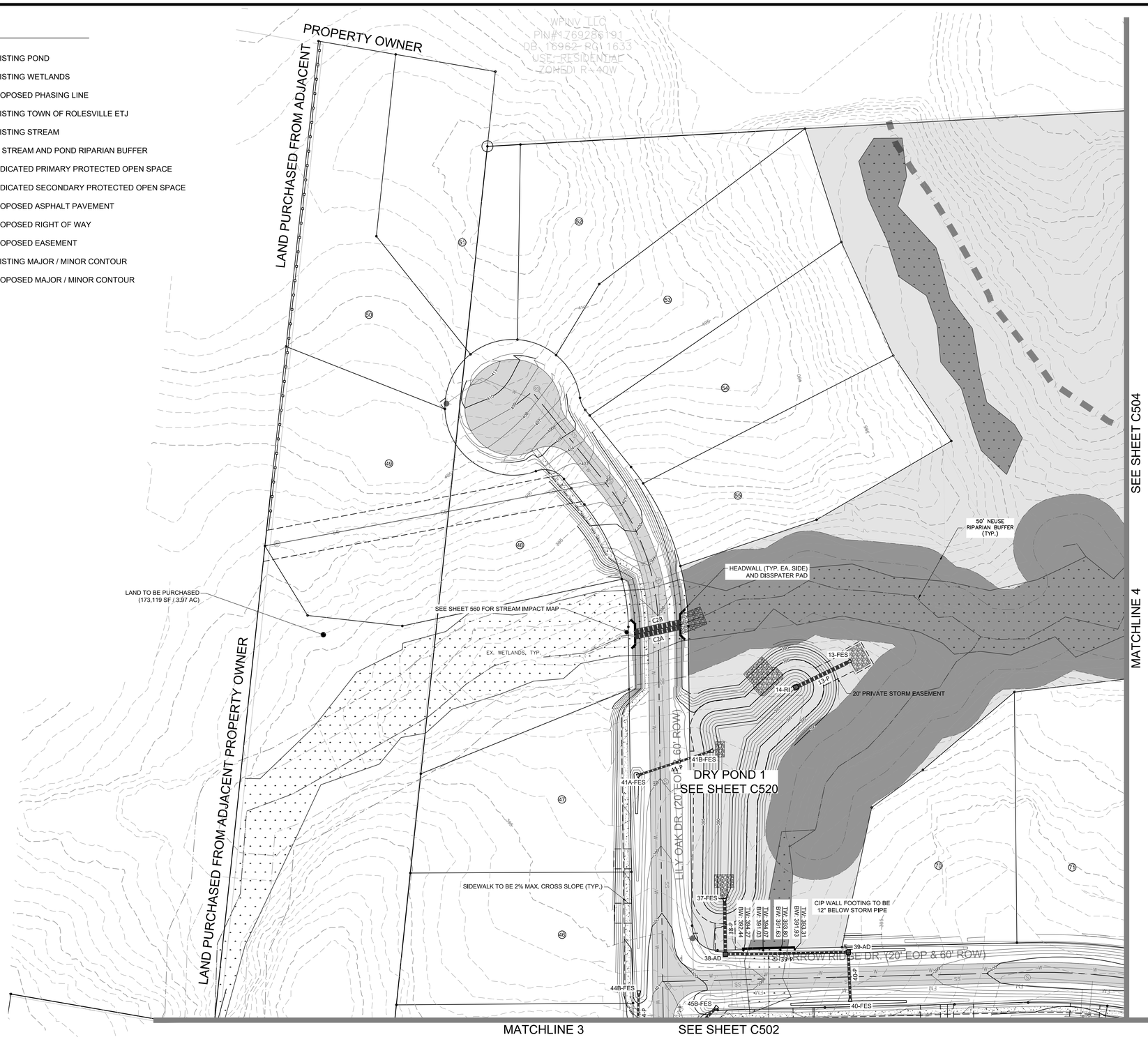

NOTE: 1' INTERVAL CONTOURS

1"=50' 50 0 50 100

NORTH Referenced to N.C. GRID (NAD 83)

REV	DESCRIPTION	DATE
03	CONSTRUCTION DOCUMENTS 3rd SUBMITTAL	06/17/2020
02	CONSTRUCTION DOCUMENTS 2nd SUBMITTAL	04/15/2020
01	CONSTRUCTION DOCUMENTS 1st SUBMITTAL	01/13/2020

REVISIONS

P:\2017 Projects\170347 Chandlers Ridge\Eng\CAD\DWG\TP SHEET\P_170347_C501 GRADING BLOW UPS.dwg

NORTH CAROLINA PROFESSIONAL SEAL 20234 ENGINEER THOMAS S. SPENCER

Bateman Civil Survey Company
Engineers • Surveyors • Planners
2524 Reliance Avenue, Apex, North Carolina 27539
Phone: 919.577.1080 Fax: 919.577.1081
NCBELS FIRM No. C-2378

CHANDLER'S RIDGE
CONSTRUCTION DOCUMENTS
CONSERVATION SUBDIVISION

410 W. YOUNG ST.
ROLESVILLE, NC
WAKE COUNTY

PHASE 1
GRADING PLAN

Project Engineer:	TSS
Designed By:	TEP
Drawn By:	TEP
Checked By:	TSS
Scale:	1" = 50'
Date:	06/17/2020
Project Number:	P170347

SHEET

C503

LEGEND:

- EXISTING POND
- EXISTING WETLANDS
- PROPOSED PHASING LINE
- EXISTING TOWN OF ROLESVILLE ETJ
- EXISTING STREAM
- 50' STREAM AND POND RIPARIAN BUFFER
- DEDICATED PRIMARY PROTECTED OPEN SPACE
- DEDICATED SECONDARY PROTECTED OPEN SPACE
- PROPOSED ASPHALT PAVEMENT
- PROPOSED RIGHT OF WAY
- PROPOSED EASEMENT
- 420 / 418 EXISTING MAJOR / MINOR CONTOUR
- 420 / 418 PROPOSED MAJOR / MINOR CONTOUR

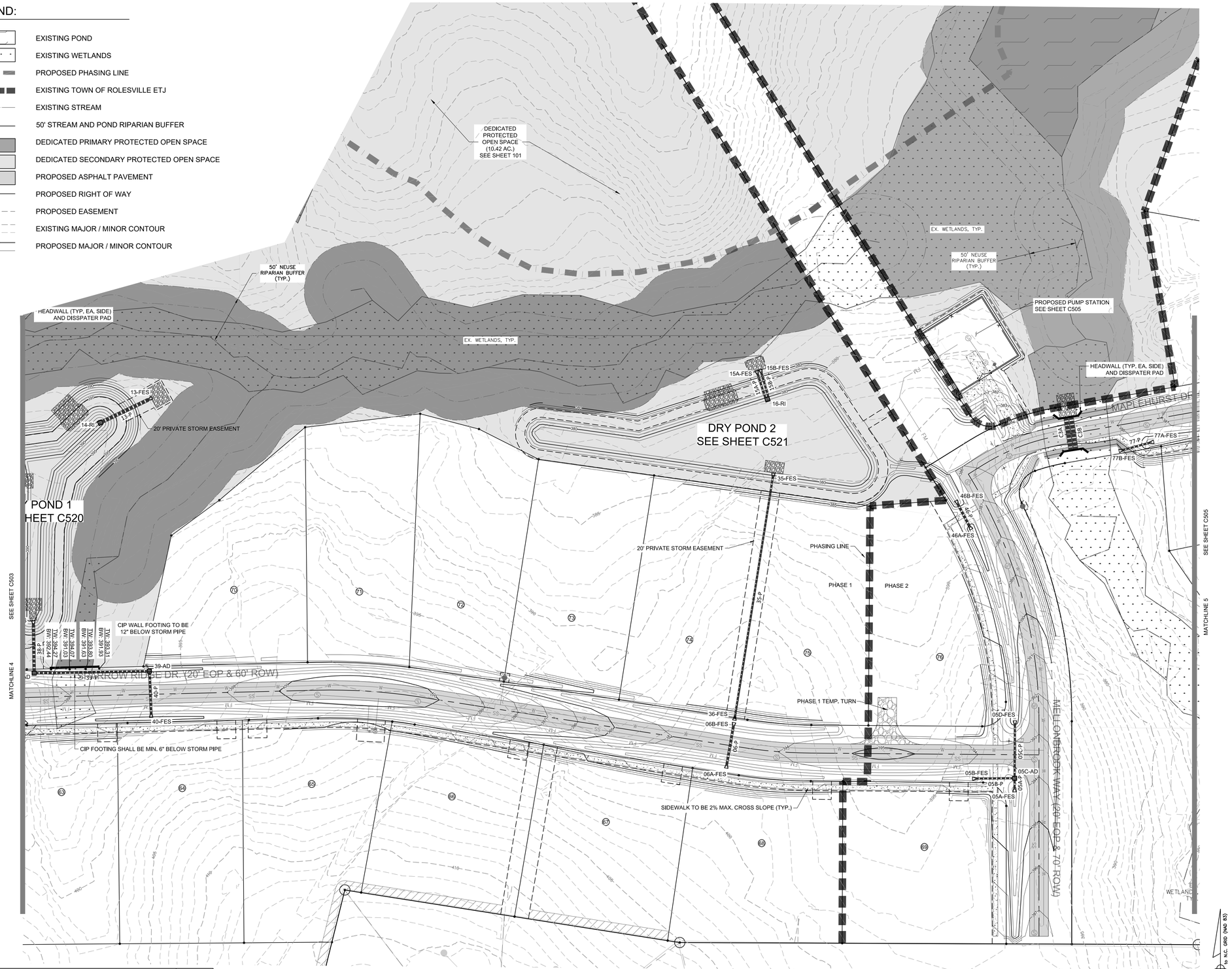

REV	DESCRIPTION	DATE
03	CONSTRUCTION DOCUMENTS 3rd SUBMITTAL	06/17/2020
02	CONSTRUCTION DOCUMENTS 2nd SUBMITTAL	04/15/2020
01	CONSTRUCTION DOCUMENTS 1st SUBMITTAL	01/13/2020

REVISIONS

NORTH CAROLINA PROFESSIONAL SEAL 20234 ENGINEER THOMAS S. SPENCER

Bateman Civil Survey Company
Engineers • Surveyors • Planners
2524 Reliance Avenue, Apex, North Carolina 27539
Phone: 919.577.1080 Fax: 919.577.1081
NCBELS FIRM No. C-2378

CHANDLER'S RIDGE
CONSTRUCTION DOCUMENTS
CONSERVATION SUBDIVISION

410 W. YOUNG ST.
ROLESVILLE, NC
WAKE COUNTY

PHASE 1 / 2 GRADING PLAN

Project Engineer:	TSS
Designed By:	TEP
Drawn By:	TEP
Checked By:	TSS
Scale:	1" = 50
Date:	06/17/2020
Project Number:	P170347

SHEET
C504

P:\2017 Projects\170347 Chandlers Ridge\Eng\CAD\DWG\TP SHEET\P_170347_C501 GRADING BLOW UPS.dwg

LEGEND:

- EXISTING POND
- EXISTING WETLANDS
- PROPOSED PHASING LINE
- EXISTING TOWN OF ROLESVILLE ETJ
- EXISTING STREAM
- 50' STREAM AND POND RIPARIAN BUFFER
- DEDICATED PRIMARY PROTECTED OPEN SPACE
- DEDICATED SECONDARY PROTECTED OPEN SPACE
- PROPOSED ASPHALT PAVEMENT
- PROPOSED RIGHT OF WAY
- PROPOSED SETBACK
- PROPOSED EASEMENT

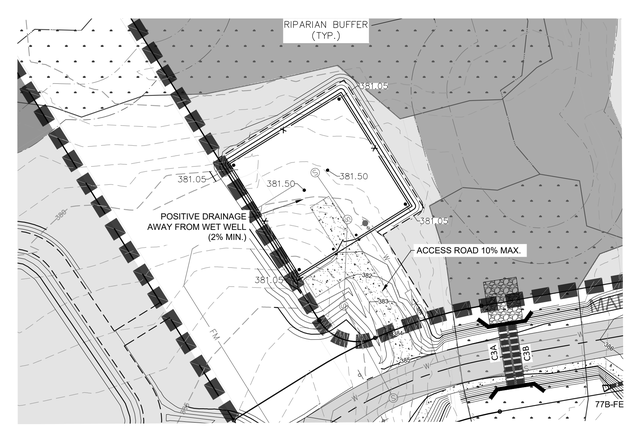

PUMP STATION ACCESS
(SEE SHEET C206)
1" = 40'

NOTE: 1' INTERVAL CONTOURS

1"=50' 50 0 50 100

NORTH Referenced to N.C. GRID (NAD 83)

REV	DESCRIPTION	DATE
03	CONSTRUCTION DOCUMENTS 3rd SUBMITTAL	06/17/2020
02	CONSTRUCTION DOCUMENTS 2nd SUBMITTAL	04/15/2020
01	CONSTRUCTION DOCUMENTS 1st SUBMITTAL	01/13/2020

REVISIONS

NORTH CAROLINA PROFESSIONAL SEAL 20234 ENGINEER THOMAS S. SPENCER JR.

Bateman Civil Survey Company
Engineers • Surveyors • Planners
2524 Reliance Avenue, Apex, North Carolina 27539
Phone: 919.577.1080 Fax: 919.577.1081
NCBELS FIRM No. C-2378

CHANDLER'S RIDGE
CONSTRUCTION DOCUMENTS
CONSERVATION SUBDIVISION
410 W. YOUNG ST.
ROLESVILLE, NC
WAKE COUNTY

PHASE 2
GRADING PLAN

Project Engineer:	TSS
Designed By:	TEP
Drawn By:	TEP
Checked By:	TSS
Scale:	1" = 50'
Date:	06/17/2020
Project Number:	P170347

SHEET
C505

P:\2017 Projects\170347 Chandlers Ridge\Eng\CAD\DWG\TP SHEET\P_170347_C501 GRADING BLOWUPS.dwg

LEGEND:

- EXISTING POND
- EXISTING WETLANDS
- PROPOSED PHASING LINE
- EXISTING TOWN OF ROLESVILLE ETJ
- EXISTING STREAM
- 50' STREAM AND POND RIPARIAN BUFFER
- DEDICATED PRIMARY PROTECTED OPEN SPACE
- DEDICATED SECONDARY PROTECTED OPEN SPACE
- PROPOSED ASPHALT PAVEMENT
- PROPOSED RIGHT OF WAY
- PROPOSED SETBACK
- PROPOSED EASEMENT

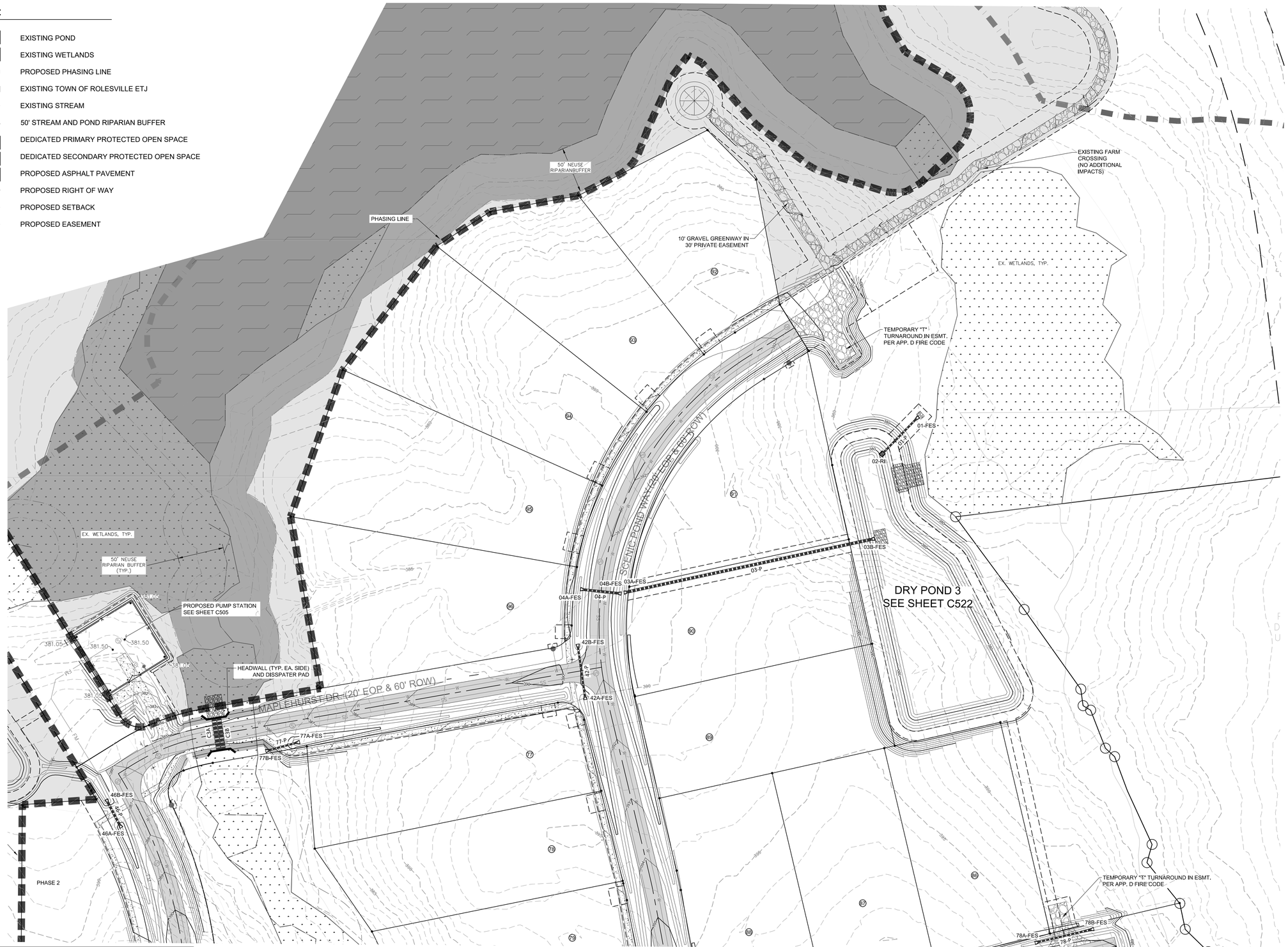

NOTE: 1' INTERVAL CONTOURS

1"=50' 50 0 50 100

NORTH Referenced to N.C. GRID (NAD 83)

REV	DESCRIPTION	DATE
03	CONSTRUCTION DOCUMENTS 3rd SUBMITTAL	06/17/2020
02	CONSTRUCTION DOCUMENTS 2nd SUBMITTAL	04/15/2020
01	CONSTRUCTION DOCUMENTS 1st SUBMITTAL	01/13/2020

REVISIONS

NORTH CAROLINA PROFESSIONAL SEAL 20234 ENGINEER THOMAS S. SPENCER

Bateman Civil Survey Company
Engineers • Surveyors • Planners
2524 Reliance Avenue, Apex, North Carolina 27539
Phone: 919.577.1080 Fax: 919.577.1081
NCBELS FIRM No. C-2378

CHANDLER'S RIDGE
CONSTRUCTION DOCUMENTS
CONSERVATION SUBDIVISION
410 W. YOUNG ST.
ROLESVILLE, NC
WAKE COUNTY

EAST GRADING PLAN

Project Engineer:	TSS
Designed By:	TEP
Drawn By:	TEP
Checked By:	TSS
Scale:	1" = 50'
Date:	06/17/2020
Project Number:	P170347

SHEET
C506

P:\2017 Projects\170347 Chandlers Ridge\Eng\CAD\DWG\TP SHEET\P_170347_C501 GRADING BLOW UPS.dwg

PIPE TABLE					
NAME	CONNECT	SIZE	LENGTH	SLOPE	MATERIAL
01-P	UP: 02-RI @ 378.00' DOWN: 01-FES @ 377.00'	18"	52.25'	1.91%	CLASS III RCP
03-P	UP: 03A-FES @ 386.50' DOWN: 03B-FES @ 378.00'	30"	271.29'	3.13%	DOUBLE WALL HDPE
04-P	UP: 04A-FES @ 386.96' DOWN: 04B-FES @ 386.60'	24"	36.00'	1.00%	CLASS IV RCP
05A-P	UP: 05A-FES @ 390.54' DOWN: 05C-AD @ 389.77'	18"	10.25'	7.51%	CLASS IV RCP
05B-P	UP: 05B-FES @ 390.40' DOWN: 05C-AD @ 389.77'	18"	40.69'	1.55%	CLASS III RCP
05C-P	UP: 05C-AD @ 389.67' DOWN: 05D-FES @ 389.10'	18"	57.17'	1.00%	CLASS IV RCP
06-P	UP: 06A-FES @ 390.20' DOWN: 06B-FES @ 389.79'	24"	40.79'	1.00%	CLASS IV RCP
07A-P	UP: 07A-FES @ 409.31' DOWN: 07C-AD @ 409.19'	18"	11.78'	1.00%	CLASS III RCP
07B-P	UP: 07B-FES @ 408.13' DOWN: 07C-AD @ 407.90'	18"	23.47'	1.00%	CLASS III RCP
07C-P	UP: 07C-AD @ 407.69' DOWN: 07D-FES @ 407.22'	18"	47.35'	1.00%	CLASS IV RCP
09-P	UP: 09A-FES @ 423.94' DOWN: 09B-FES @ 423.56'	24"	38.17'	1.00%	CLASS V RCP
12A-P	UP: 12A-FES @ 422.53' DOWN: 12C-AD @ 422.37'	18"	15.51'	1.00%	CLASS III RCP
12B-P	UP: 12B-FES @ 420.97' DOWN: 12C-AD @ 420.76'	18"	21.28'	1.00%	CLASS III RCP
12C-P	UP: 12C-AD @ 420.66' DOWN: 12D-FES @ 420.16'	18"	49.74'	1.00%	CLASS IV RCP
13-P	UP: 14-RI @ 388.00' DOWN: 13-FES @ 387.43'	36"	56.90'	1.00%	CLASS III RCP
15A-P	UP: 16-RI @ 377.50' DOWN: 15A-FES @ 377.00'	18"	25.93'	1.93%	CLASS III RCP
15B-P	UP: 16-RI @ 377.50' DOWN: 15B-FES @ 377.00'	18"	25.91'	1.93%	CLASS III RCP
19-P	UP: 20-CB @ 434.67' DOWN: 19-FES @ 434.58'	18"	8.50'	1.05%	CLASS III RCP
21-P	UP: 22-CB @ 431.98' DOWN: 21-FES @ 431.89'	18"	8.94'	1.00%	CLASS III RCP
25-P	UP: 26-CB @ 427.98' DOWN: 25-FES @ 427.89'	18"	8.56'	1.00%	CLASS III RCP
29-P	UP: 30-CB @ 423.57' DOWN: 29-FES @ 423.49'	18"	7.77'	1.08%	CLASS III RCP
33-P	UP: 34-CB @ 418.61' DOWN: 33-FES @ 418.52'	18"	8.95'	1.00%	CLASS III RCP
35-P	UP: 36-FES @ 389.29' DOWN: 35-FES @ 380.00'	18"	258.72'	3.59%	DOUBLE WALL HDPE
38-P	UP: 38-AD @ 390.97' DOWN: 37-FES @ 390.00'	30"	51.64'	1.88%	CLASS III RCP
39-P	UP: 39-AD @ 392.30' DOWN: 38-AD @ 391.07'	24"	123.15'	1.00%	CLASS III RCP
40-P	UP: 40-FES @ 394.90' DOWN: 39-AD @ 392.40'	24"	45.18'	5.53%	CLASS IV RCP
41-P	UP: 41A-FES @ 394.48' DOWN: 41B-FES @ 392.06'	18"	71.80'	3.37%	CLASS IV RCP
42-P	UP: 42A-FES @ 387.74' DOWN: 42B-FES @ 387.22'	18"	52.48'	1.00%	CLASS IV RCP
43-P	UP: 43A-FES @ 409.52' DOWN: 43B-FES @ 407.26'	18"	24.83'	9.10%	CLASS III RCP
44-P	UP: 44A-FES @ 398.32' DOWN: 44B-FES @ 397.67'	18"	38.35'	1.70%	CLASS III RCP
45-P	UP: 45A-FES @ 398.00' DOWN: 45B-FES @ 396.22'	24"	31.75'	5.61%	CLASS III RCP
46-P	UP: 46A-FES @ 383.31' DOWN: 46B-FES @ 383.05'	24"	26.24'	1.00%	CLASS III RCP
47-P	UP: 48-CB @ 421.21' DOWN: 47-FES @ 420.90'	30"	30.62'	1.00%	CLASS III RCP
48-P	UP: 49-CB @ 421.61' DOWN: 48-CB @ 421.31'	30"	29.62'	1.00%	CLASS IV RCP
49-P	UP: 50-FES @ 423.42' DOWN: 49-CB @ 421.71'	24"	34.03'	5.03%	CLASS III RCP
51-P	UP: 52-CB @ 423.21' DOWN: 49-CB @ 421.71'	24"	150.21'	1.00%	CLASS III RCP
52-P	UP: 53-CB @ 423.56' DOWN: 52-CB @ 423.31'	24"	25.46'	1.00%	CLASS III RCP
53-P	UP: 54-CB @ 432.68' DOWN: 53-FES @ 432.37'	18"	31.20'	1.00%	CLASS III RCP
54-P	UP: 55-CB @ 433.08' DOWN: 54-CB @ 432.78'	18"	29.81'	1.00%	CLASS IV RCP
55-P	UP: 56-FES @ 434.62' DOWN: 55-CB @ 433.18'	18"	37.35'	3.86%	CLASS III RCP

PIPE TABLE					
NAME	CONNECT	SIZE	LENGTH	SLOPE	MATERIAL
59-P	UP: 58-CB @ 428.71' DOWN: 59-CB @ 428.45'	18"	25.54'	-1.00%	CLASS IV RCP
60-P	UP: 59-CB @ 428.35' DOWN: 60-CB @ 427.20'	18"	114.70'	1.00%	CLASS III RCP
61-P	UP: 60-CB @ 427.10' DOWN: 61-CB @ 426.84'	18"	25.63'	1.00%	CLASS III RCP
65-P	UP: 66-CB @ 424.17' DOWN: 53-CB @ 423.66'	24"	51.46'	1.00%	CLASS III RCP
66-P	UP: 73-CB @ 425.08' DOWN: 66-CB @ 424.27'	24"	81.41'	1.00%	CLASS III RCP
67-P	UP: 61-CB @ 426.74' DOWN: 67-CB @ 426.18'	18"	56.23'	1.00%	CLASS III RCP
68-P	UP: 76-CB @ 428.58' DOWN: 61-CB @ 426.84'	18"	174.48'	1.00%	CLASS III RCP
69-P	UP: 70-CB @ 430.37' DOWN: 69-CB @ 430.11'	18"	25.69'	1.01%	CLASS III RCP
70-P	UP: 71-CB @ 431.52' DOWN: 70-CB @ 430.97'	18"	110.50'	0.50%	CLASS III RCP
71-P	UP: 72-CB @ 431.88' DOWN: 71-CB @ 431.62'	18"	25.79'	1.00%	CLASS IV RCP
72-P	UP: 67-CB @ 426.08' DOWN: 73-CB @ 425.18'	18"	89.85'	1.00%	CLASS III RCP
73-P	UP: 74-AD @ 429.00' DOWN: 73-CB @ 428.00'	18"	18.41'	5.43%	CLASS III RCP
74-P	UP: 75-AD @ 433.00' DOWN: 74-AD @ 430.00'	18"	208.77'	1.44%	DOUBLE WALL HDPE
76-P	UP: 69-CB @ 430.01' DOWN: 76-CB @ 428.68'	18"	183.27'	0.73%	CLASS III RCP
77-P	UP: 77A-FES @ 382.80' DOWN: 77B-FES @ 379.00'	18"	29.66'	12.81%	CLASS III RCP
78-P	UP: 78A-FES @ 392.79' DOWN: 78B-FES @ 391.77'	18"	57.17'	1.78%	CLASS IV RCP
C1A	UP: @ 402.00' DOWN: @ 401.28'	48"	41.22'	1.75%	CLASS III RCP
C1B	UP: @ 402.00' DOWN: @ 401.28'	48"	41.00'	1.76%	CLASS III RCP
C2A	UP: @ 384.00' DOWN: @ 382.80'	48"	46.22'	2.60%	CLASS III RCP
C2B	UP: @ 384.00' DOWN: @ 382.80'	48"	46.28'	2.59%	CLASS III RCP
C3A	UP: @ 376.00' DOWN: @ 375.67'	48"	33.25'	1.00%	CLASS III RCP
C3B	UP: @ 376.00' DOWN: @ 375.67'	48"	33.21'	1.00%	CLASS III RCP

STRUCTURE TABLE			
NAME	RIM	PIPES IN	PIPES OUT
01-FES		01-P - 18" RCP - INV IN = 377.00'	
02-RI			01-P - 18" RCP - INV OUT = 378.00'
03A-FES			03-P - 30" RCP - INV OUT = 386.50'
03B-FES		03-P - 30" RCP - INV IN = 378.00'	
04A-FES			04-P - 24" RCP - INV OUT = 386.96'
04B-FES		04-P - 24" RCP - INV IN = 386.60'	
05A-FES			05A-P - 18" RCP - INV OUT = 390.54'
05B-FES			05B-P - 18" RCP - INV OUT = 390.40'
05C-AD	392.83'	05A-P - 18" RCP - INV IN = 389.77' 05B-P - 18" RCP - INV IN = 389.77'	05C-P - 18" RCP - INV OUT = 389.67'
05D-FES		05C-P - 18" RCP - INV IN = 389.10'	
06A-FES			06-P - 24" RCP - INV OUT = 390.20'
06B-FES		06-P - 24" RCP - INV IN = 389.79'	
07A-FES			07A-P - 18" RCP - INV OUT = 409.31'
07B-FES			07B-P - 18" RCP - INV OUT = 408.13'
07C-AD	411.69'	07A-P - 18" RCP - INV IN = 409.19' 07B-P - 18" RCP - INV IN = 407.90'	07C-P - 18" RCP - INV OUT = 407.69'
07D-FES		07C-P - 18" RCP - INV IN = 407.22'	
09A-FES			09-P - 24" RCP - INV OUT = 423.94'
09B-FES		09-P - 24" RCP - INV IN = 423.56'	
12A-FES			12A-P - 18" RCP - INV OUT = 422.53'
12B-FES			12B-P - 18" RCP - INV OUT = 420.97'
12C-AD	425.08'	12A-P - 18" RCP - INV IN = 422.37' 12B-P - 18" RCP - INV IN = 420.76'	12C-P - 18" RCP - INV OUT = 420.66'
12D-FES		12C-P - 18" RCP - INV IN = 420.16'	
13-FES		13-P - 36" RCP - INV IN = 387.43'	
14-RI	405.96'		13-P - 36" RCP - INV OUT = 388.00'
15A-FES		15A-P - 18" RCP - INV IN = 377.00'	
15B-FES		15B-P - 18" RCP - INV IN = 377.00'	
16-RI			15A-P - 18" RCP - INV OUT = 377.50' 15B-P - 18" RCP - INV OUT = 377.50'
19-FES		19-P - 18" RCP - INV IN = 434.58'	
20-CB	437.96'		19-P - 18" RCP - INV OUT = 434.67'
21-FES		21-P - 18" RCP - INV IN = 431.89'	
22-CB	435.00'		21-P - 18" RCP - INV OUT = 431.98'
25-FES		25-P - 18" RCP - INV IN = 427.89'	
26-CB	431.00'		25-P - 18" RCP - INV OUT = 427.98'
29-FES		29-P - 18" RCP - INV IN = 423.49'	
30-CB	426.87'		29-P - 18" RCP - INV OUT = 423.57'
33-FES		33-P - 18" RCP - INV IN = 418.52'	
34-CB	421.75'		33-P - 18" RCP - INV OUT = 418.61'
35-FES		35-P - 18" RCP - INV IN = 380.00'	
36-FES			35-P - 18" RCP - INV OUT = 389.29'
37-FES		38-P - 30" RCP - INV IN = 390.00'	
38-AD	395.79'	39-P - 24" RCP - INV IN = 391.07'	38-P - 30" RCP - INV OUT = 390.97'
39-AD	394.76'	40-P - 24" RCP - INV IN = 392.40'	39-P - 24" RCP - INV OUT = 392.30'

STRUCTURE TABLE			
NAME	RIM	PIPES IN	PIPES OUT
40-FES			40-P - 24" RCP - INV OUT = 394.90'
41A-FES			41-P - 18" RCP - INV OUT = 394.48'
41B-FES		41-P - 18" RCP - INV IN = 392.06'	
42A-FES			42-P - 18" RCP - INV OUT = 387.74'
42B-FES		42-P - 18" RCP - INV IN = 387.22'	
43A-FES			43-P - 18" RCP - INV OUT = 409.52'
43B-FES		43-P - 18" RCP - INV IN = 407.26'	
44A-FES			44-P - 18" RCP - INV OUT = 398.32'
44B-FES		44-P - 18" RCP - INV IN = 397.67'	
45A-FES			45-P - 24" RCP - INV OUT = 398.00'
45B-FES		45-P - 24" RCP - INV IN = 396.22'	
46A-FES			46-P - 24" RCP - INV OUT = 383.31'
46B-FES		46-P - 24" RCP - INV IN = 383.05'	
47-FES		47-P - 30" RCP - INV IN = 420.90'	
48-CB	425.15'	48-P - 30" RCP - INV IN = 421.31'	47-P - 30" RCP - INV OUT = 421.21'
49-CB	425.47'	51-P - 24" RCP - INV IN = 421.71' 49-P - 24" RCP - INV IN = 421.71'	48-P - 30" RCP - INV OUT = 421.61'
50-FES			49-P - 24" RCP - INV OUT = 423.42'
52-CB	431.41'	52-P - 24" RCP - INV IN = 423.31'	51-P - 24" RCP - INV OUT = 423.21'
53-CB	431.41'	65-P - 24" RCP - INV IN = 423.66'	52-P - 24" RCP - INV OUT = 423.56'
53-FES		53-P - 18" RCP - INV IN = 432.37'	
54-CB	436.56'	54-P - 18" RCP - INV IN = 432.78'	53-P - 18" RCP - INV OUT = 432.68'
55-CB	436.68'	55-P - 18" RCP - INV IN = 433.18'	54-P - 18" RCP - INV OUT = 433.08'
56-FES			55-P - 18" RCP - INV OUT = 434.62'
58-CB	431.45'	59-P - 18" RCP - INV IN = 428.71'	
59-CB	431.44'		60-P - 18" RCP - INV OUT = 428.35' 59-P - 18" RCP - INV OUT = 428.45'
60-CB	435.29'	60-P - 18" RCP - INV IN = 427.20'	61-P - 18" RCP - INV OUT = 427.10'
61-CB	435.29'	61-P - 18" RCP - INV IN = 426.84' 68-P - 18" RCP - INV IN = 426.84'	67-P - 18" RCP - INV OUT = 426.74'
66-CB	432.56'	66-P - 24" RCP - INV IN = 424.27'	65-P - 24" RCP - INV OUT = 424.17'
67-CB	435.35'	67-P - 18" RCP - INV IN = 426.18'	72-P - 18" RCP - INV OUT = 426.08'
69-CB	436.70'	69-P - 18" RCP - INV IN = 430.11'	76-P - 18" RCP - INV OUT = 430.01'
70-CB	436.69'	70-P - 18" RCP - INV IN = 430.97'	69-P - 18" RCP - INV OUT = 430.37'
71-CB	434.80'	71-P - 18" RCP - INV IN = 431.62'	70-P - 18" RCP - INV OUT = 431.52'
72-CB	434.79'		71-P - 18" RCP - INV OUT = 431.88'
73-CB	434.04'	72-P - 18" RCP - INV IN = 425.18' 73-P - 18" RCP - INV IN = 428.00'	66-P - 24" RCP - INV OUT = 425.08'
74-AD	434.28'	74-P - 18" RCP - INV IN = 430.00'	73-P - 18" RCP - INV OUT = 429.00'
75-AD	437.22'		74-P - 18" RCP - INV OUT = 433.00'
76-CB	438.73'	76-P - 18" RCP - INV IN = 428.68'	68-P - 18" RCP - INV OUT = 428.58'
77A-FES			77-P - 18" RCP - INV OUT = 382.80'
77B-FES		77-P - 18" RCP - INV IN = 379.00'	
78A-FES			78-P - 18" RCP - INV OUT = 392.79'
78B-FES		78-P - 18" RCP - INV IN = 391.77'	

REV	DESCRIPTION	DATE
03	CONSTRUCTION DOCUMENTS 3rd SUBMITTAL	06/17/2020
02	CONSTRUCTION DOCUMENTS 2nd SUBMITTAL	04/15/2020
01	CONSTRUCTION DOCUMENTS 1st SUBMITTAL	01/13/2020

REVISIONS

P:\2017 Projects\170347 Chandlers Ridge\Eng\CAD\DWG\TP SHEETP_170347_C501 GRADING BLOWUPS.dwg

NORTH CAROLINA PROFESSIONAL SEAL 20234 ENGINEER THOMAS S. SPEARMAN

Bateman Civil Survey Company
Engineers ● Surveyors ● Planners
2524 Reliance Avenue, Apex, North Carolina 27539
Phone: 919.577.1080 Fax: 919.577.1081
NCBELS FIRM No. C-2378

CHANDLER'S RIDGE
CONSTRUCTION DOCUMENTS
CONSERVATION SUBDIVISION
410 W. YOUNG ST.
ROLESVILLE, NC
WAKE COUNTY

STORM DRAINAGE PIPE/STRUCTURE TABLES

Project Engineer:	TSS
Designed By:	TEP
Drawn By:	TEP
Checked By:	TSS
Scale:	1" = 100'
Date:	06/17/2020
Project Number:	P170347

SHEET
C510

LEGEND:

- EXISTING RIPARIAN STREAM
- EXISTING RIPARIAN BUFFER
- PROJECT PARCEL BOUNDARY
- PRIVATE RIGHT OF WAY
- EXISTING MINOR CONTOUR (1 FT.)
- EXISTING MAJOR CONTOUR (5 FT.)
- PROPOSED MINOR CONTOUR (1 FT.)
- PROPOSED MAJOR CONTOUR (5 FT.)
- PROPOSED PAVEMENT
- PROPOSED GRAVEL
- TREE AND VEGETATION PROTECTION AREA
- PROPOSED EASEMENT
- PROPOSED SETBACK

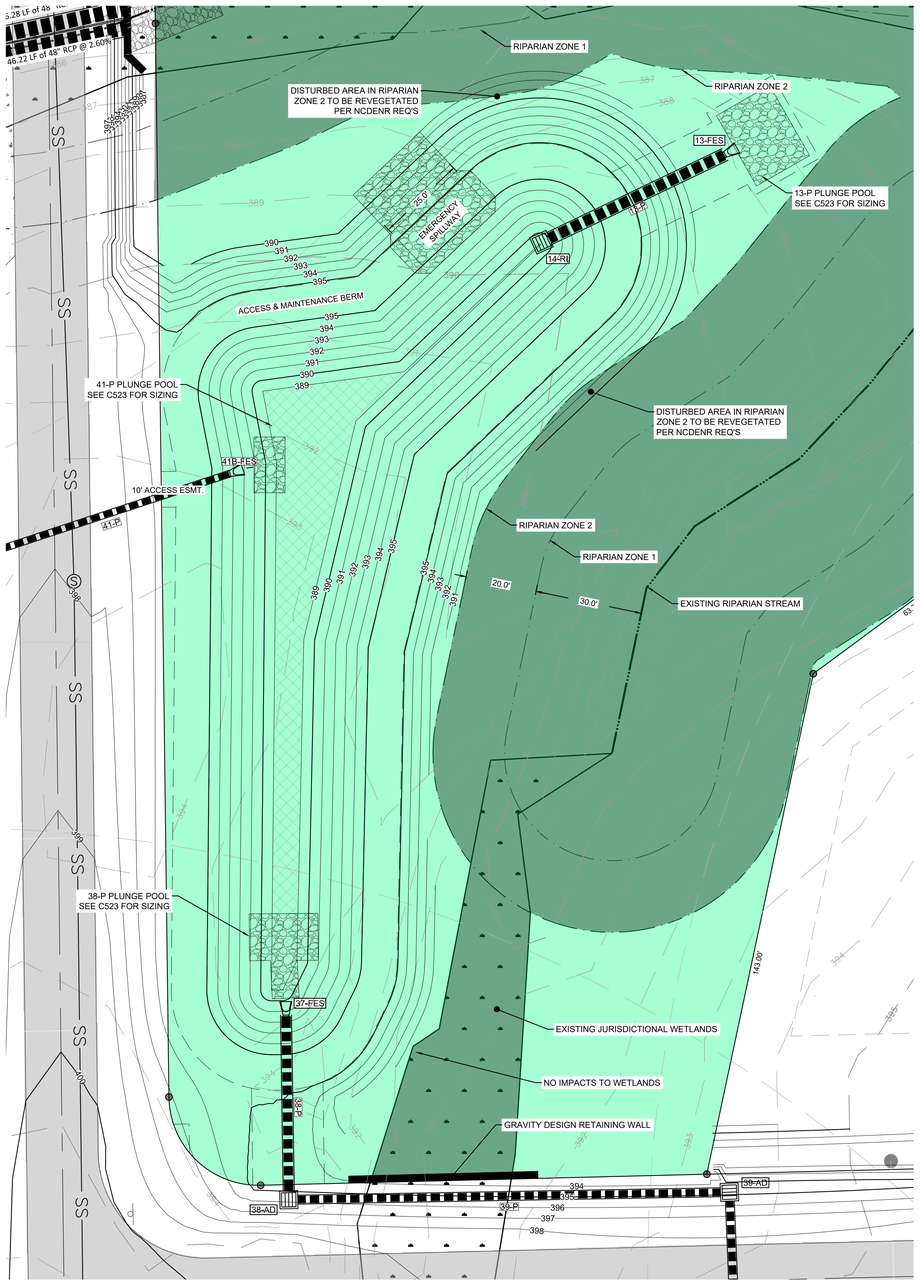

DRY POND #1 DETAIL
SCALE: 1" = 20'

1"=20' 20 0 20 40

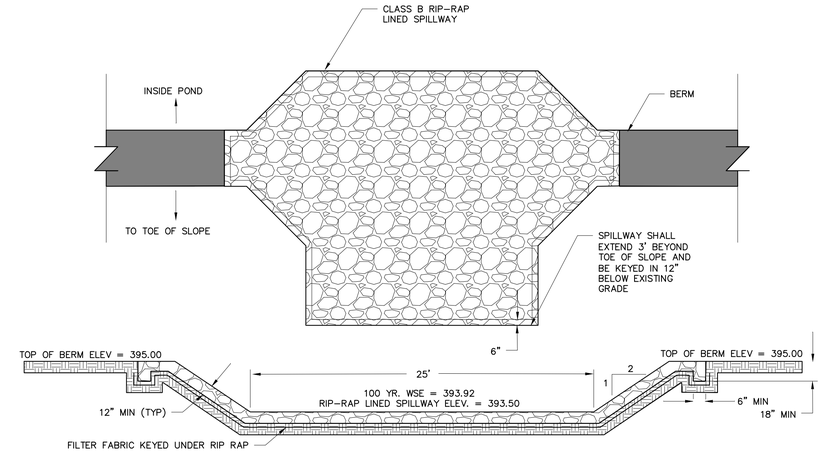

EMERGENCY SPILLWAY BMP DETAIL
SCALE: N.T.S.

POND ROUTE – STARTING WATER SURFACE @ BOTTOM POND	POND #1
RISER RIM ELEV.	392.15
OUTLET PIPE SIZE	36"
OUTLET INVERT ELEVATION	388.00
OUTLET SLOPE	1.00%
TOP OF DAM ELEVATION	395.00
EMERG. SPILL, WIDTH& ELEVATION	25' @ 393.50
POND BOTTOM ELEV.	389.00
DRAWDOWN SIZE	1.25" @ 389.00
1–YR ELEV.	391.64
10–YR ELEV.	393.03
25–YE ELEV.	393.43
100–YR ELEV.	393.92

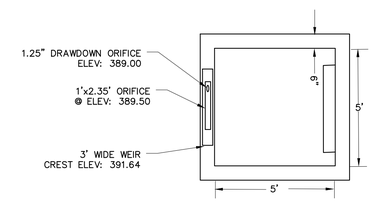

TOP VIEW RISER SCHEMATIC
SCALE: N.T.S.

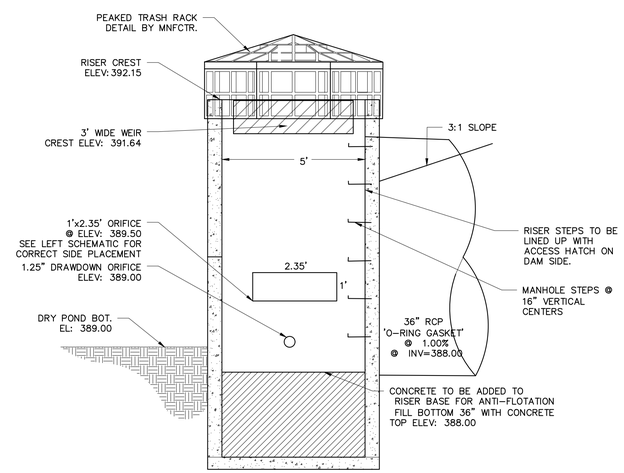

WET-POND BMP RISER DETAIL
SCALE: N.T.S.

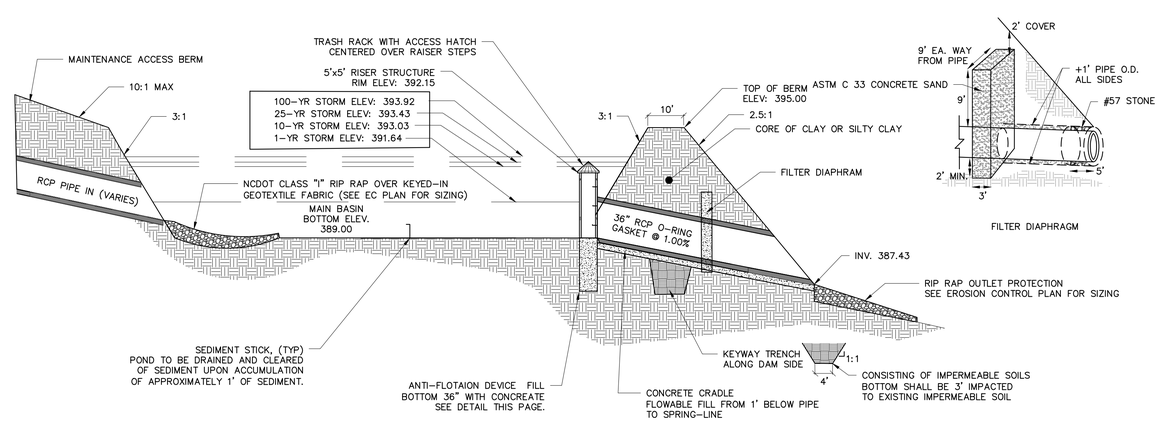

DRY POND BMP DETAIL
SCALE: N.T.S.

REV	DESCRIPTION	DATE
03	CONSTRUCTION DOCUMENTS 3rd SUBMITTAL	06/17/2020
02	CONSTRUCTION DOCUMENTS 2nd SUBMITTAL	04/15/2020
01	CONSTRUCTION DOCUMENTS 1st SUBMITTAL	01/13/2020

REVISIONS

P:\2017 Projects\170347 Chandlers Ridge\Eng\CAD\DWG\TP SHEET\P_170347_C520_SCM.dwg

Bateman Civil Survey Company
Engineers • Surveyors • Planners
2524 Reliance Avenue, Apex, North Carolina 27539
Phone: 919.577.1080 Fax: 919.577.1081
NCBELS FIRM No. C-2378

CHANDLER'S RIDGE
CONSTRUCTION DOCUMENTS
CONSERVATION SUBDIVISION

410 W. YOUNG ST.
ROLESVILLE, NC
WAKE COUNTY

DRY POND #1
PLAN & DETAILS

Project Engineer:	TSS
Designed By:	TEP
Drawn By:	TEP
Checked By:	TSS
Scale:	
Date:	06/17/2020
Project Number:	P170347

SHEET
C520

LEGEND:

- EXISTING RIPARIAN STREAM
- EXISTING RIPARIAN BUFFER
- PROJECT PARCEL BOUNDARY
- PRIVATE RIGHT OF WAY
- EXISTING MINOR CONTOUR (1 FT.)
- EXISTING MAJOR CONTOUR (5 FT.)
- PROPOSED MINOR CONTOUR (1 FT.)
- PROPOSED MAJOR CONTOUR (5 FT.)
- PROPOSED PAVEMENT
- PROPOSED GRAVEL
- TREE AND VEGETATION PROTECTION AREA
- PROPOSED EASEMENT
- PROPOSED SETBACK

POND ROUTE – STARTING WATER SURFACE @ BOTTOM POND	POND #2
RISER RIM ELEV.	379.60
OUTLET PIPE SIZE	(2) 18"
OUTLET INVERT ELEVATION	377.50
OUTLET SLOPE	1.93%
TOP OF DAM ELEVATION	382.50
EMERG. SPILL, WIDTH& ELEVATION	30' @ 381.00
POND BOTTOM ELEV.	378.50
DRAWDOWN SIZE	1.25" @ 378.50
1–YR ELEV.	379.72
10–YR ELEV.	380.81
25–YE ELEV.	381.15
100–YR ELEV.	381.45

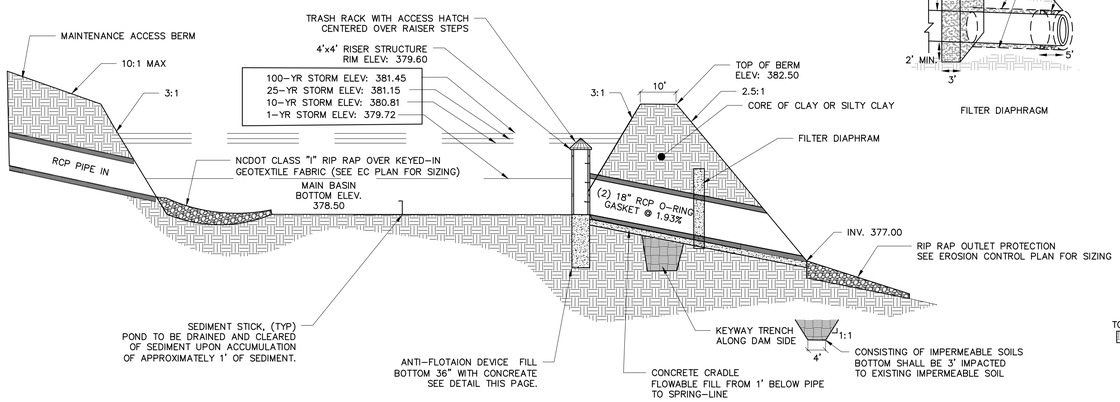

DRY POND BMP DETAIL
SCALE: N.T.S.

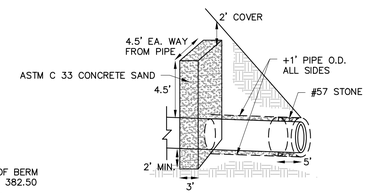

FILTER DIAPHRAGM

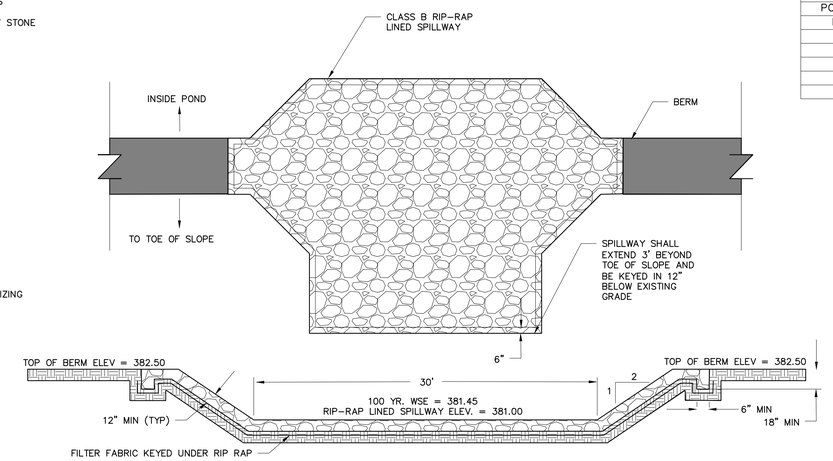

EMERGENCY SPILLWAY BMP DETAIL
SCALE: N.T.S.

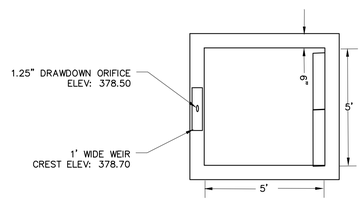

TOP VIEW RISER SCHEMATIC
SCALE: N.T.S.

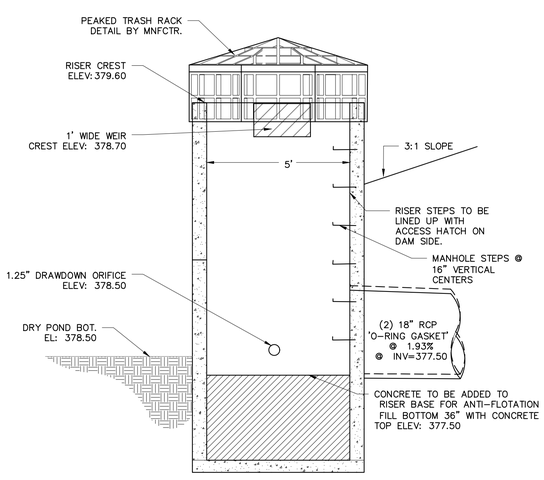

WET–POND BMP RISER DETAIL
SCALE: N.T.S.

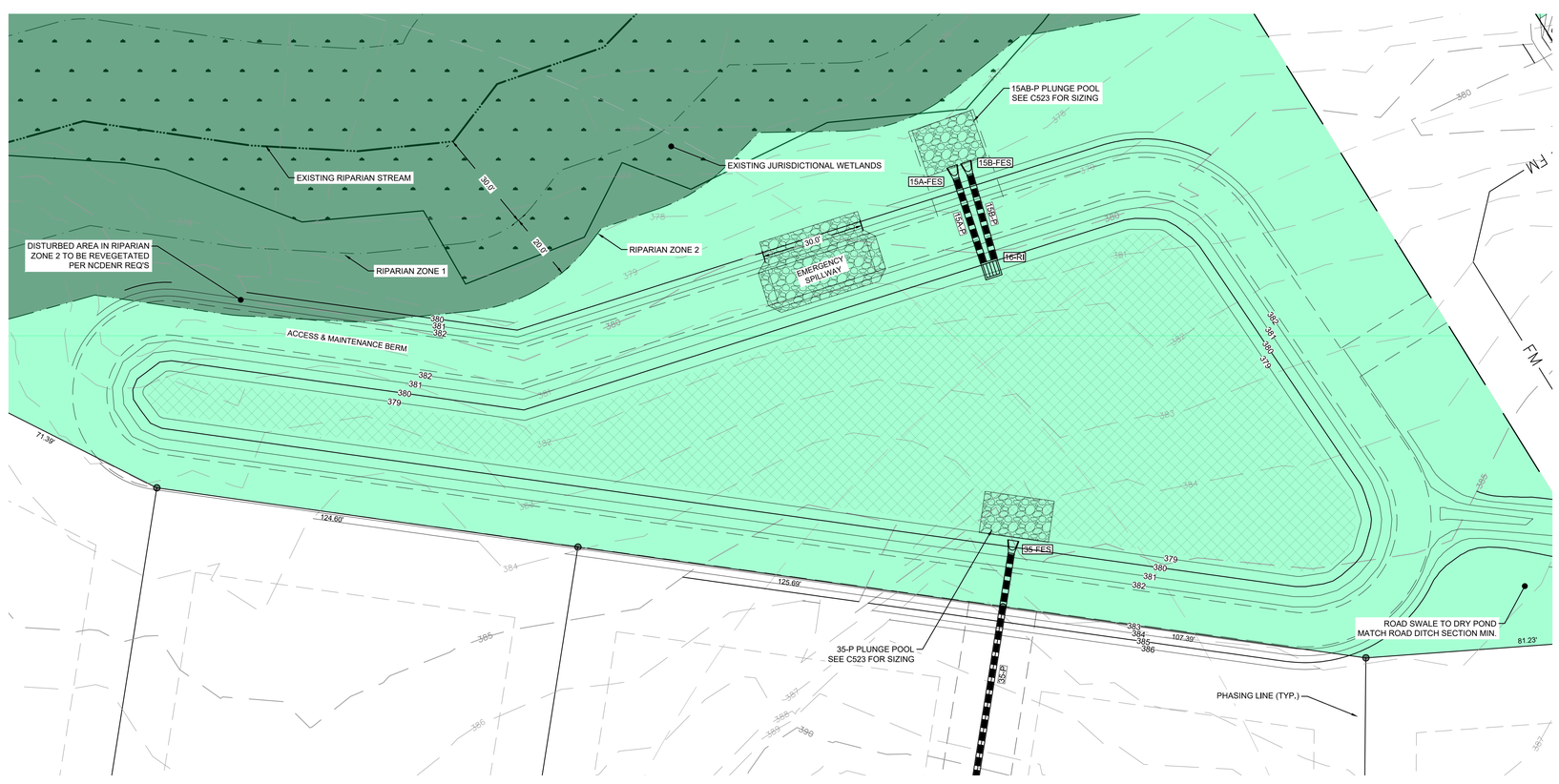

DRY POND #2 DETAIL
SCALE: 1" = 20'

REV	DESCRIPTION	DATE
03	CONSTRUCTION DOCUMENTS 3rd SUBMITTAL	06/17/2020
02	CONSTRUCTION DOCUMENTS 2nd SUBMITTAL	04/15/2020
01	CONSTRUCTION DOCUMENTS 1st SUBMITTAL	01/13/2020

REVISIONS

Bateman Civil Survey Company
Engineers • Surveyors • Planners
2524 Reliance Avenue, Apex, North Carolina 27539
Phone: 919.577.1080 Fax: 919.577.1081
NCBELS FIRM No. C-2378

CHANDLER'S RIDGE
CONSTRUCTION DOCUMENTS
CONSERVATION SUBDIVISION
410 W. YOUNG ST.
ROLESVILLE, NC
WAKE COUNTY

DRY POND #2 PLAN & DETAILS

Project Engineer:	TSS
Designed By:	TEP
Drawn By:	TEP
Checked By:	TSS
Scale:	
Date:	06/17/2020
Project Number:	P170347

SHEET
C521

P:\2017 Projects\170347 Chandlers Ridge\Eng\CAD\DWG\TP SHEET\P_170347_C520_SCM.dwg

LEGEND:

- EXISTING RIPARIAN STREAM
- EXISTING RIPARIAN BUFFER
- PROJECT PARCEL BOUNDARY
- PRIVATE RIGHT OF WAY
- EXISTING MINOR CONTOUR (1 FT.)
- EXISTING MAJOR CONTOUR (5 FT.)
- PROPOSED MINOR CONTOUR (1 FT.)
- PROPOSED MAJOR CONTOUR (5 FT.)
- PROPOSED PAVEMENT
- PROPOSED GRAVEL
- TREE AND VEGETATION PROTECTION AREA
- PROPOSED EASEMENT
- PROPOSED SETBACK

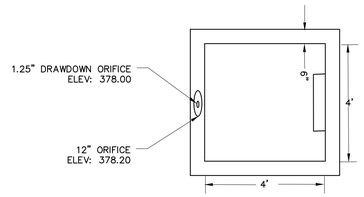

TOP VIEW RISER SCHEMATIC
SCALE: N.T.S.

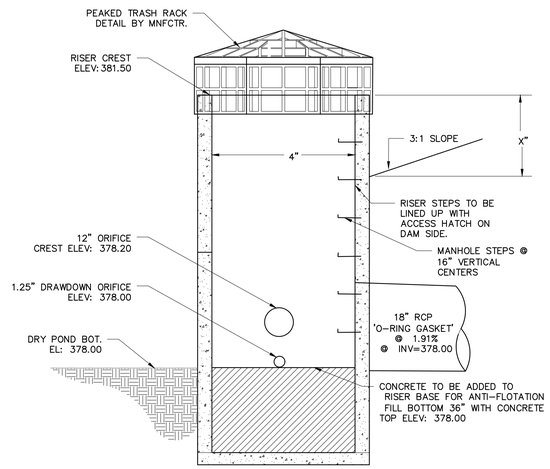

WET-POND BMP RISER DETAIL
SCALE: N.T.S.

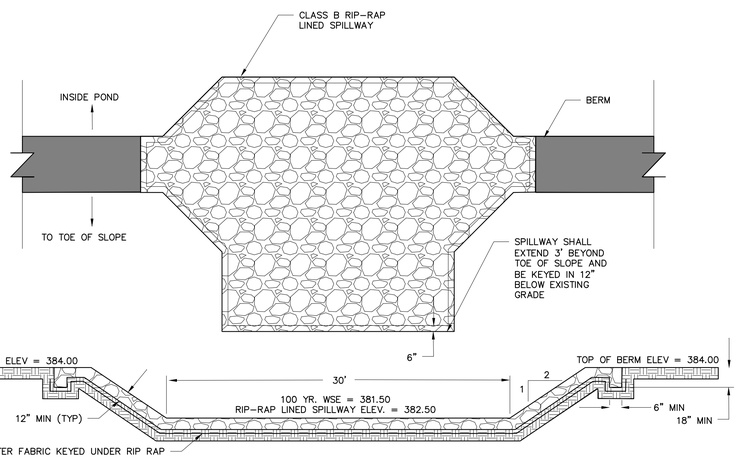

EMERGENCY SPILLWAY BMP DETAIL
SCALE: N.T.S.

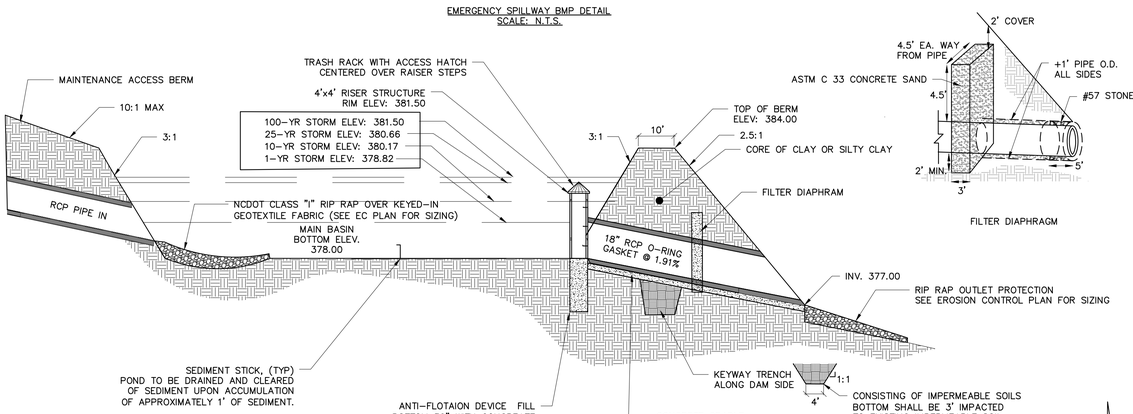

DRY POND BMP DETAIL
SCALE: N.T.S.

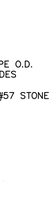

FILTER DIAPHRAGM

POND ROUTE - STARTING WATER SURFACE @ BOTTOM POND	POND #2
RISER RIM ELEV.	381.50
OUTLET PIPE SIZE	18"
OUTLET INVERT ELEVATION	378.00
OUTLET SLOPE	1.91%
TOP OF DAM ELEVATION	384.00
EMERG. SPILL, WIDTH& ELEVATION	25' @ 382.50
POND BOTTOM ELEV.	378.00
DRAWDOWN SIZE	1.25" @ 378.00
1-YR ELEV.	378.82
10-YR ELEV.	380.17
25-YE ELEV.	380.66
100-YR ELEV.	381.50

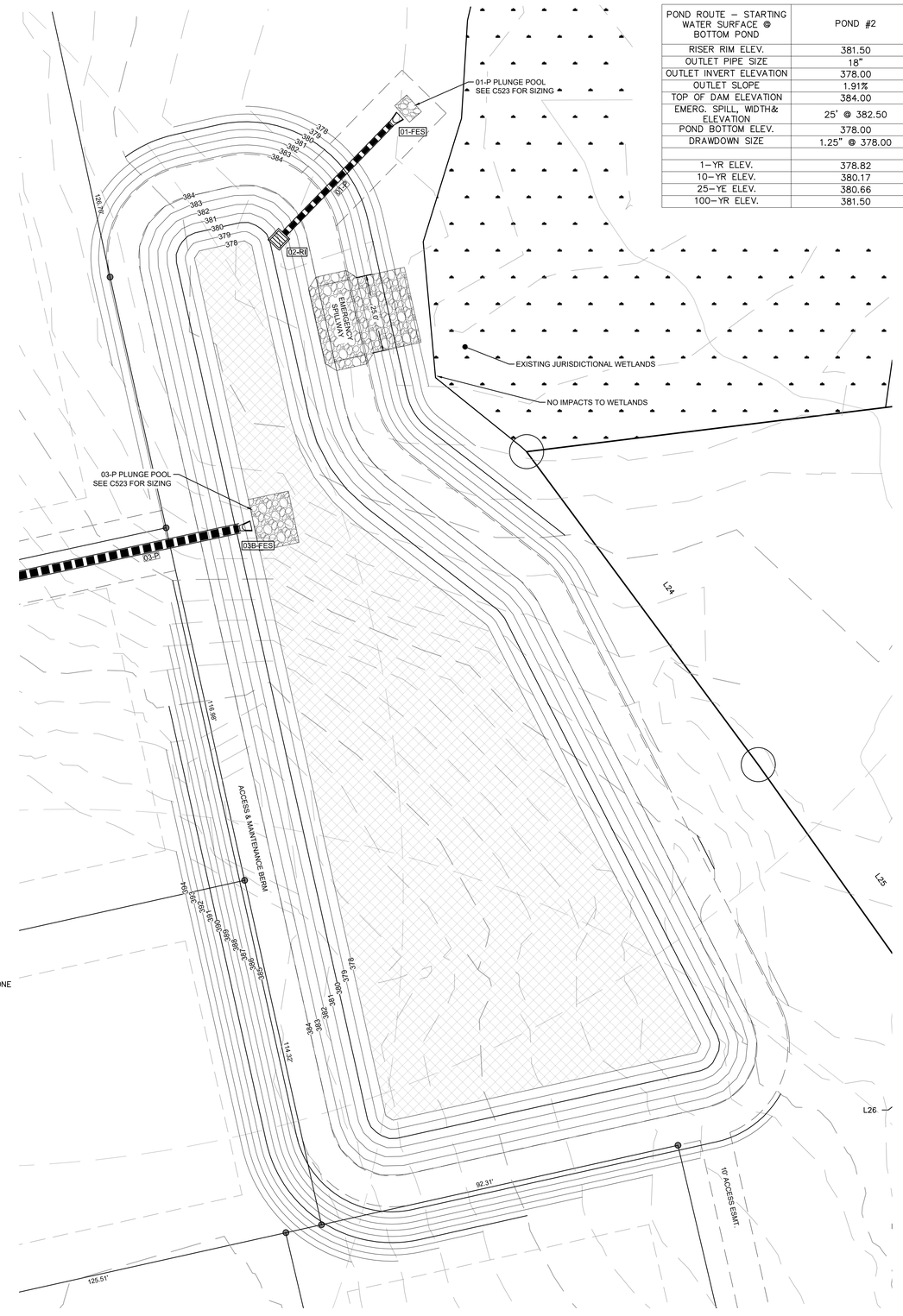

DRY POND #3 DETAIL
SCALE: 1" = 20'

REV	DESCRIPTION	DATE
03	CONSTRUCTION DOCUMENTS 3rd SUBMITTAL	06/17/2020
02	CONSTRUCTION DOCUMENTS 2nd SUBMITTAL	04/15/2020
01	CONSTRUCTION DOCUMENTS 1st SUBMITTAL	01/13/2020

REVISIONS

Bateman Civil Survey Company
Engineers • Surveyors • Planners
2524 Reliance Avenue, Apex, North Carolina 27539
Phone: 919.577.1080 Fax: 919.577.1081
NCBELS FIRM No. C-2378

CHANDLER'S RIDGE
CONSTRUCTION DOCUMENTS
CONSERVATION SUBDIVISION
410 W. YOUNG ST.
ROLESVILLE, NC
WAKE COUNTY

DRY POND #3
PLAN & DETAILS

Project Engineer:	TSS
Designed By:	TEP
Drawn By:	TEP
Checked By:	TSS
Scale:	
Date:	06/17/2020
Project Number:	P170347

SHEET
C522

P:\2017 Projects\170347 Chandlers Ridge\Eng\CAD\DWG\TP SHEET\P_170347_C520_SCM.dwg

JOB:	CHANDLER'S RIDGE 01-P			
DESIGNER:	TEP	Date:	1/8/2020	
CHECKER:	TSS	Date:		
INPUT DATA:				
Conduit Diameter		D =	1.50	ft
Conduit Discharge:		Q =	5.44	cfs
Conduit Slope at Outlet:		S =	0.02	ft/ft
Conduit Outlet Invert Elevation:		El, CO =	377.00	ft
Tailwater Elevation:		El, TW =	377.00	ft
Outlet Channel Invert Elevation:		El, CH =	377.00	ft
Water Density:		RHO =	1.00	
Bed/Riprap Particle Density: (Default 2.64)		RHOS =	2.64	
D, 50 Riprap Size:		RS =	0.25	ft
Riprap Thickness: (2.5*D, 50 recommended)		RT =	0.63	ft
Bedding Thickness: (6 inch min. rec.) (Enter **0** for geotextile)		BT =	0.00	ft
Side Slope Ratio:		Zw =	3.00	ft/ft
Upstream End Slope Ratio:		Zlu =	3.00	ft/ft
Downstream End Slope Ratio:		Zld =	3.00	ft/ft
Combined End Slope Ratio:		Z1 =	3.00	ft/ft
OUTPUT---POOL LOCATION AND DIMENSIONS:				
Vert. Dist. from Tailwater to Conduit Invert:		Zp =	0.00	ft
Submergence Check: (If Zp < 0 , Use Zp = 0)		Use Zp =	0.00	ft
Beaching Check: [Q/(gD^5)^0.5 <= (1.0+25*D,50/D)]			O.K.	
Beaching Controlled				
Distance from Conduit Exit to C/L Pool:		Xm =	1.01	ft
Pool depth at C/L Below Conduit Invert:		Zp+0.8Zm =	0.48	ft
Pool Bottom Elev:		El,PB =	376.52	ft
Pool Bottom Length:		2Lr2 =	0.39	ft
Pool Bottom Width:		2Wr2 =	0.37	ft
Upstream Pool Length at Tailwater Elev.:		Lru =	1.64	ft
Downstream Pool Length at Tailwater Elev.:		Lrd =	1.64	ft
Pool Width at Tailwater Elev.:		2Wr =	3.27	ft
Check Side Slope Ratio: (Wr>=We)			O.K.	
Side Slope Ratio Zw O.K.				
Check Min. End Slope Ratio: (Lru & Lrd >= Le)			O.K.	
End Slope Ratios O.K.				
Check Upstream Length: (Lru >= Xm)			O.K.	
End Slope Ratio Zlu O.K.				
Pool Bottom Elev. at Bottom of Riprap:		El, BR =	375.89	ft
Pool Bottom Elev. at Bottom of Bedding:		El, BB =	375.89	ft
OUTPUT---VOLUMES BELOW WATER SURFACE ELEVATION:				
Volume of Excavation (measured from bottom surface of bedding):		V,pbs =	0.8	cu yd
Volume of Rock Riprap:		V,rs =	0.7	cu yd
Area of Geotextile:		A,gt =	9.3	sq yd

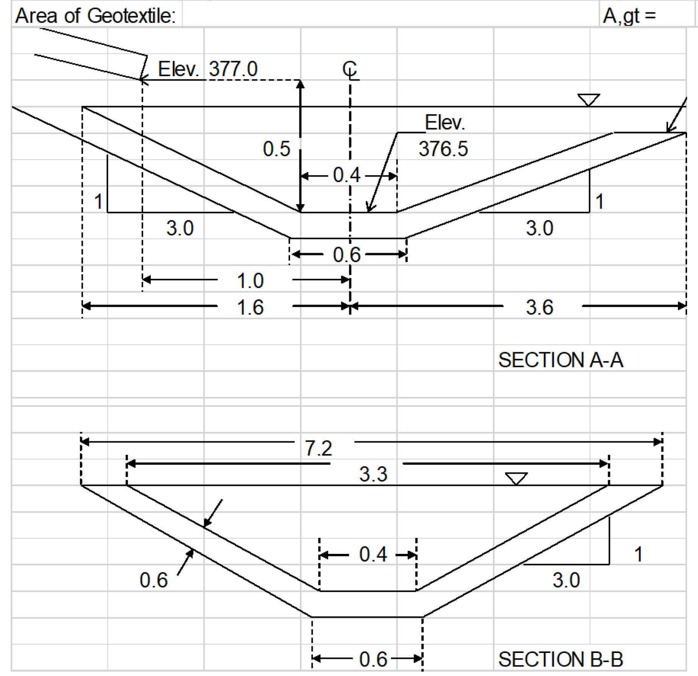

JOB:	CHANDLER'S RIDGE 03-P			
DESIGNER:	TEP	Date:	1/8/2020	
CHECKER:	TSS	Date:		
INPUT DATA:				
Conduit Diameter		D =	2.50	ft
Conduit Discharge:		Q =	31.93	cfs
Conduit Slope at Outlet:		S =	0.01	ft/ft
Conduit Outlet Invert Elevation:		El, CO =	378.00	ft
Tailwater Elevation:		El, TW =	378.00	ft
Outlet Channel Invert Elevation:		El, CH =	378.00	ft
Water Density:		RHO =	1.00	
Bed/Riprap Particle Density: (Default 2.64)		RHOS =	2.64	
D, 50 Riprap Size:		RS =	0.50	ft
Riprap Thickness: (2.5*D, 50 recommended)		RT =	1.25	ft
Bedding Thickness: (6 inch min. rec.) (Enter **0** for geotextile)		BT =	0.50	ft
Side Slope Ratio:		Zw =	3.00	ft/ft
Upstream End Slope Ratio:		Zlu =	3.00	ft/ft
Downstream End Slope Ratio:		Zld =	3.00	ft/ft
Combined End Slope Ratio:		Z1 =	3.00	ft/ft
OUTPUT---POOL LOCATION AND DIMENSIONS:				
Vert. Dist. from Tailwater to Conduit Invert:		Zp =	0.00	ft
Submergence Check: (If Zp < 0 , Use Zp = 0)		Use Zp =	0.00	ft
Beaching Check: [Q/(gD^5)^0.5 <= (1.0+25*D,50/D)]			O.K.	
Beaching Controlled				
Distance from Conduit Exit to C/L Pool:		Xm =	3.18	ft
Pool depth at C/L Below Conduit Invert:		Zp+0.8Zm =	1.35	ft
Pool Bottom Elev:		El,PB =	376.65	ft
Pool Bottom Length:		2Lr2 =	1.14	ft
Pool Bottom Width:		2Wr2 =	1.07	ft
Upstream Pool Length at Tailwater Elev.:		Lru =	4.60	ft
Downstream Pool Length at Tailwater Elev.:		Lrd =	4.60	ft
Pool Width at Tailwater Elev.:		2Wr =	9.14	ft
Check Side Slope Ratio: (Wr>=We)			O.K.	
Side Slope Ratio Zw O.K.				
Check Min. End Slope Ratio: (Lru & Lrd >= Le)			O.K.	
End Slope Ratios O.K.				
Check Upstream Length: (Lru >= Xm)			O.K.	
End Slope Ratio Zlu O.K.				
Pool Bottom Elev. at Bottom of Riprap:		El, BR =	375.40	ft
Pool Bottom Elev. at Bottom of Bedding:		El, BB =	374.90	ft
OUTPUT---VOLUMES BELOW WATER SURFACE ELEVATION:				
Volume of Excavation (measured from bottom surface of bedding):		V,pbs =	16.9	cu yd
Volume of Rock Riprap:		V,rs =	8.7	cu yd
Volume of Bedding:		V,bs =	6.7	cu yd

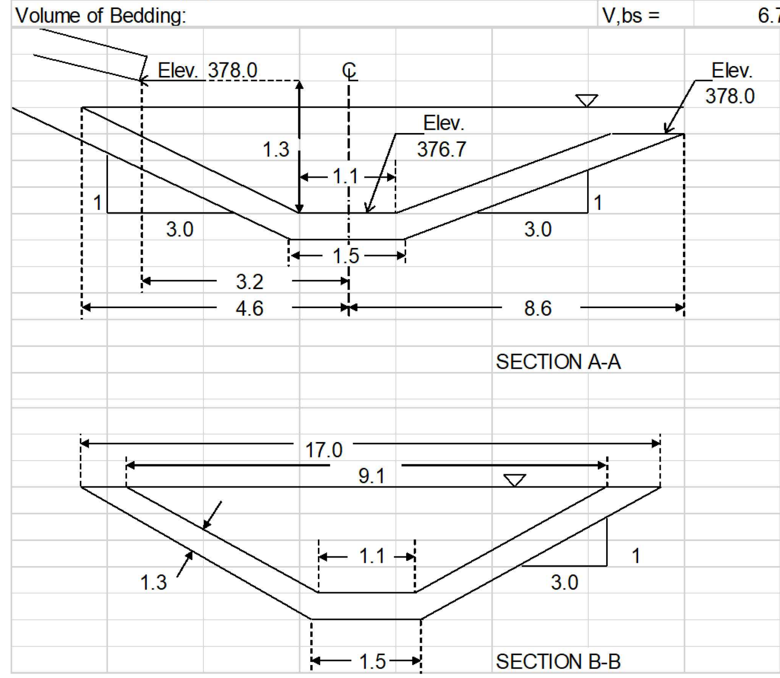

JOB:	CHANDLER'S RIDGE 41-P			
DESIGNER:	TEP	Date:	1/8/2020	
CHECKER:	TSS	Date:		
INPUT DATA:				
Conduit Diameter		D =	1.50	ft
Conduit Discharge:		Q =	16.02	cfs
Conduit Slope at Outlet:		S =	0.06	ft/ft
Conduit Outlet Invert Elevation:		El, CO =	390.00	ft
Tailwater Elevation:		El, TW =	390.00	ft
Outlet Channel Invert Elevation:		El, CH =	389.00	ft
Water Density:		RHO =	1.00	
Bed/Riprap Particle Density: (Default 2.64)		RHOS =	2.64	
D, 50 Riprap Size:		RS =	0.50	ft
Riprap Thickness: (2.5*D, 50 recommended)		RT =	1.25	ft
Bedding Thickness: (6 inch min. rec.) (Enter **0** for geotextile)		BT =	0.50	ft
Side Slope Ratio:		Zw =	3.00	ft/ft
Upstream End Slope Ratio:		Zlu =	3.00	ft/ft
Downstream End Slope Ratio:		Zld =	3.00	ft/ft
Combined End Slope Ratio:		Z1 =	3.00	ft/ft
OUTPUT---POOL LOCATION AND DIMENSIONS:				
Vert. Dist. from Tailwater to Conduit Invert:		Zp =	0.00	ft
Submergence Check: (If Zp < 0 , Use Zp = 0)		Use Zp =	0.00	ft
Beaching Check: [Q/(gD^5)^0.5 <= (1.0+25*D,50/D)]			O.K.	
Beaching Controlled				
Distance from Conduit Exit to C/L Pool:		Xm =	3.57	ft
Pool depth at C/L Below Conduit Invert:		Zp+0.8Zm =	1.12	ft
Pool Bottom Elev:		El,PB =	388.88	ft
Pool Bottom Length:		2Lr2 =	1.03	ft
Pool Bottom Width:		2Wr2 =	0.93	ft
Upstream Pool Length at Tailwater Elev.:		Lru =	3.89	ft
Downstream Pool Length at Tailwater Elev.:		Lrd =	3.89	ft
Pool Width at Tailwater Elev.:		2Wr =	7.67	ft
Check Side Slope Ratio: (Wr>=We)			O.K.	
Side Slope Ratio Zw O.K.				
Check Min. End Slope Ratio: (Lru & Lrd >= Le)			O.K.	
End Slope Ratios O.K.				
Check Upstream Length: (Lru >= Xm)			O.K.	
End Slope Ratio Zlu O.K.				
Pool Bottom Elev. at Bottom of Riprap:		El, BR =	387.63	ft
Pool Bottom Elev. at Bottom of Bedding:		El, BB =	387.13	ft
OUTPUT---VOLUMES BELOW WATER SURFACE ELEVATION:				
Volume of Excavation (measured from bottom surface of bedding):		V,pbs =	13.5	cu yd
Volume of Rock Riprap:		V,rs =	6.9	cu yd
Volume of Bedding:		V,bs =	5.7	cu yd

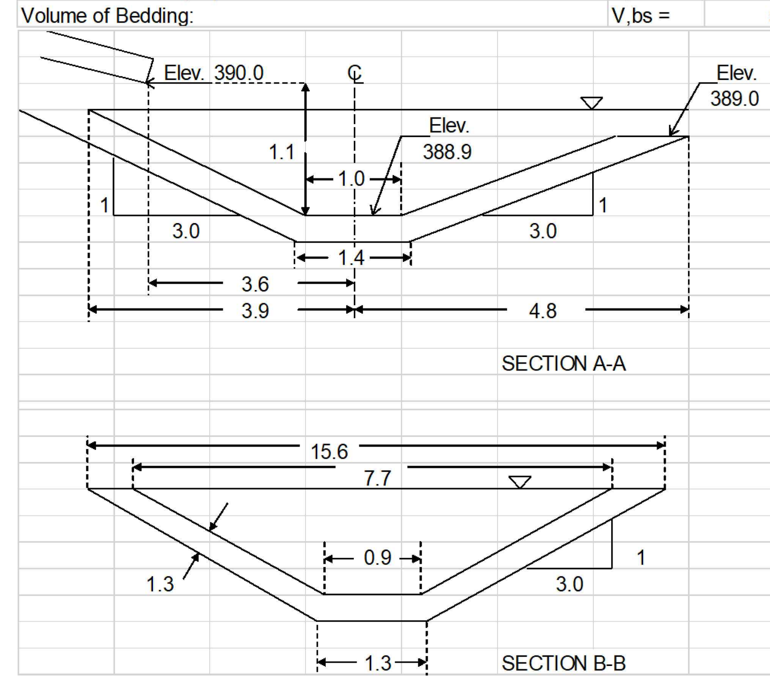

JOB:	CHANDLER'S RIDGE 38-P			
DESIGNER:	TEP	Date:	1/8/2020	
CHECKER:	TSS	Date:		
INPUT DATA:				
Conduit Diameter		D =	2.50	ft
Conduit Discharge:		Q =	24.13	cfs
Conduit Slope at Outlet:		S =	0.02	ft/ft
Conduit Outlet Invert Elevation:		El, CO =	390.00	ft
Tailwater Elevation:		El, TW =	390.00	ft
Outlet Channel Invert Elevation:		El, CH =	389.00	ft
Water Density:		RHO =	1.00	
Bed/Riprap Particle Density: (Default 2.64)		RHOS =	2.64	
D, 50 Riprap Size:		RS =	0.40	ft
Riprap Thickness: (2.5*D, 50 recommended)		RT =	1.00	ft
Bedding Thickness: (6 inch min. rec.) (Enter **0** for geotextile)		BT =	0.50	ft
Side Slope Ratio:		Zw =	3.00	ft/ft
Upstream End Slope Ratio:		Zlu =	3.00	ft/ft
Downstream End Slope Ratio:		Zld =	3.00	ft/ft
Combined End Slope Ratio:		Z1 =	3.00	ft/ft
OUTPUT---POOL LOCATION AND DIMENSIONS:				
Vert. Dist. from Tailwater to Conduit Invert:		Zp =	0.00	ft
Submergence Check: (If Zp < 0 , Use Zp = 0)		Use Zp =	0.00	ft
Beaching Check: [Q/(gD^5)^0.5 <= (1.0+25*D,50/D)]			O.K.	
Beaching Controlled				
Distance from Conduit Exit to C/L Pool:		Xm =	2.86	ft
Pool depth at C/L Below Conduit Invert:		Zp+0.8Zm =	1.90	ft
Pool Bottom Elev:		El,PB =	388.10	ft
Pool Bottom Length:		2Lr2 =	1.56	ft
Pool Bottom Width:		2Wr2 =	1.49	ft
Upstream Pool Length at Tailwater Elev.:		Lru =	6.48	ft
Downstream Pool Length at Tailwater Elev.:		Lrd =	6.48	ft
Pool Width at Tailwater Elev.:		2Wr =	12.89	ft
Check Side Slope Ratio: (Wr>=We)			O.K.	
Side Slope Ratio Zw O.K.				
Check Min. End Slope Ratio: (Lru & Lrd >= Le)			O.K.	
End Slope Ratios O.K.				
Check Upstream Length: (Lru >= Xm)			O.K.	
End Slope Ratio Zlu O.K.				
Pool Bottom Elev. at Bottom of Riprap:		El, BR =	387.10	ft
Pool Bottom Elev. at Bottom of Bedding:		El, BB =	386.60	ft
OUTPUT---VOLUMES BELOW WATER SURFACE ELEVATION:				
Volume of Excavation (measured from bottom surface of bedding):		V,pbs =	23.0	cu yd
Volume of Rock Riprap:		V,rs =	10.2	cu yd
Volume of Bedding:		V,bs =	8.3	cu yd

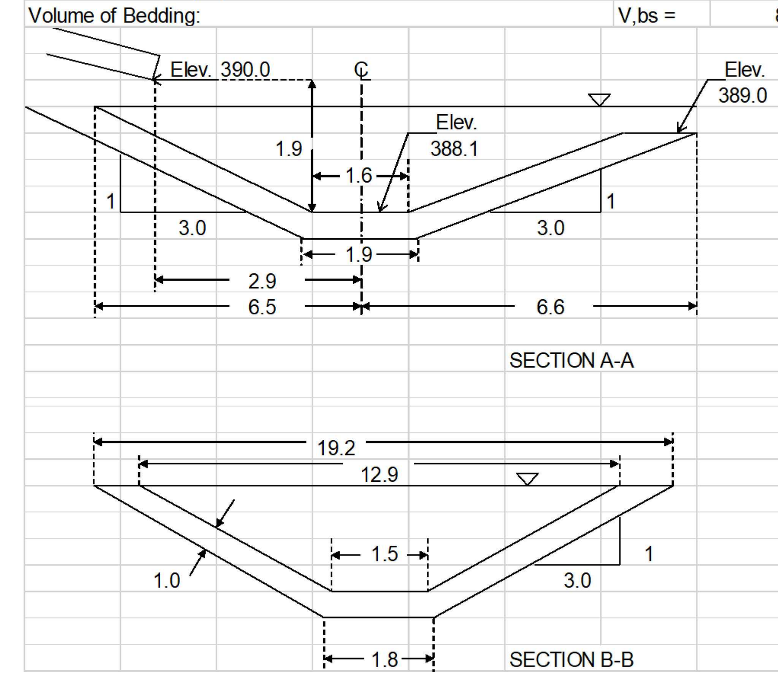

JOB:	CHANDLER'S RIDGE 35-P			
DESIGNER:	TEP	Date:	1/8/2020	
CHECKER:	TSS	Date:		
INPUT DATA:				
Conduit Diameter		D =	2.00	ft
Conduit Discharge:		Q =	26.79	cfs
Conduit Slope at Outlet:		S =	0.04	ft/ft
Conduit Outlet Invert Elevation:		El, CO =	380.00	ft
Tailwater Elevation:		El, TW =	380.00	ft
Outlet Channel Invert Elevation:		El, CH =	378.50	ft
Water Density:		RHO =	1.00	
Bed/Riprap Particle Density: (Default 2.64)		RHOS =	2.64	
D, 50 Riprap Size:		RS =	0.50	ft
Riprap Thickness: (2.5*D, 50 recommended)		RT =	1.25	ft
Bedding Thickness: (6 inch min. rec.) (Enter **0** for geotextile)		BT =	0.50	ft
Side Slope Ratio:		Zw =	3.00	ft/ft
Upstream End Slope Ratio:		Zlu =	3.00	ft/ft
Downstream End Slope Ratio:		Zld =	3.00	ft/ft
Combined End Slope Ratio:		Z1 =	3.00	ft/ft
OUTPUT---POOL LOCATION AND DIMENSIONS:				
Vert. Dist. from Tailwater to Conduit Invert:		Zp =	0.00	ft
Submergence Check: (If Zp < 0 , Use Zp = 0)		Use Zp =	0.00	ft
Beaching Check: [Q/(gD^5)^0.5 <= (1.0+25*D,50/D)]			O.K.	
Beaching Controlled				
Distance from Conduit Exit to C/L Pool:		Xm =	4.56	ft
Pool depth at C/L Below Conduit Invert:		Zp+0.8Zm =	1.85	ft
Pool Bottom Elev:		El,PB =	378.15	ft
Pool Bottom Length:		2Lr2 =	1.64	ft
Pool Bottom Width:		2Wr2 =	1.50	ft
Upstream Pool Length at Tailwater Elev.:		Lru =	6.36	ft
Downstream Pool Length at Tailwater Elev.:		Lrd =	6.36	ft
Pool Width at Tailwater Elev.:		2Wr =	12.58	ft
Check Side Slope Ratio: (Wr>=We)			O.K.	
Side Slope Ratio Zw O.K.				
Check Min. End Slope Ratio: (Lru & Lrd >= Le)			O.K.	
End Slope Ratios O.K.				
Check Upstream Length: (Lru >= Xm)			O.K.	
End Slope Ratio Zlu O.K.				
Pool Bottom Elev. at Bottom of Riprap:		El, BR =	376.90	ft
Pool Bottom Elev. at Bottom of Bedding:		El, BB =	376.40	ft
OUTPUT---VOLUMES BELOW WATER SURFACE ELEVATION:				
Volume of Excavation (measured from bottom surface of bedding):		V,pbs =	27.3	cu yd
Volume of Rock Riprap:		V,rs =	13.7	cu yd
Volume of Bedding:		V,bs =	9.4	cu yd

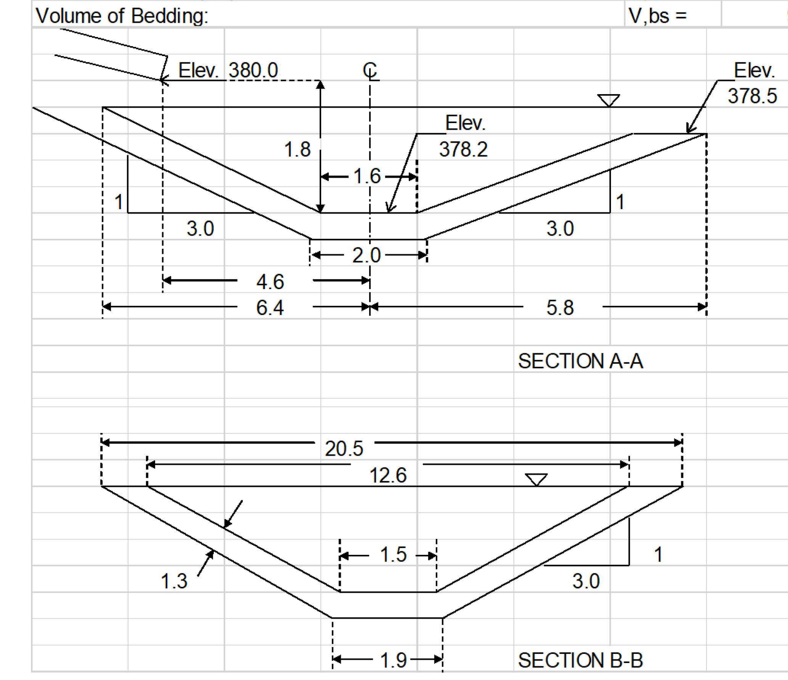

JOB:	CHANDLER'S RIDGE 15AB-P			
DESIGNER:	TEP	Date:	1/8/2020	
CHECKER:	TSS	Date:		
INPUT DATA:				
Conduit Diameter		D =	3.00	ft
Conduit Discharge:		Q =	35.37	cfs
Conduit Slope at Outlet:		S =	0.04	ft/ft
Conduit Outlet Invert Elevation:		El, CO =	377.00	ft
Tailwater Elevation:		El, TW =	377.00	ft
Outlet Channel Invert Elevation:		El, CH =	377.00	ft
Water Density:		RHO =	1.00	
Bed/Riprap Particle Density: (Default 2.64)		RHOS =	2.64	
D, 50 Riprap Size:		RS =	0.50	ft
Riprap Thickness: (2.5*D, 50 recommended)		RT =	1.25	ft
Bedding Thickness: (6 inch min. rec.) (Enter **0** for geotextile)		BT =	0.50	ft
Side Slope Ratio:		Zw =	3.00	ft/ft
Upstream End Slope Ratio:		Zlu =	3.00	ft/ft
Downstream End Slope Ratio:		Zld =	3.00	ft/ft
Combined End Slope Ratio:		Z1 =	3.00	ft/ft
OUTPUT---POOL LOCATION AND DIMENSIONS:				
Vert. Dist. from Tailwater to Conduit Invert:		Zp =	0.00	ft
Submergence Check: (If Zp < 0 , Use Zp = 0)		Use Zp =	0.00	ft
Beaching Check: [Q/(gD^5)^0.5 <= (1.0+25*D,50/D)]			O.K.	
Beaching Controlled				
Distance from Conduit Exit to C/L Pool:		Xm =	2.66	ft
Pool depth at C/L Below Conduit Invert:		Zp+0.8Zm =	1.51	ft
Pool Bottom Elev:		El,PB =	375.49	ft
Pool Bottom Length:		2Lr2 =	1.23	ft
Pool Bottom Width:		2Wr2 =	1.18	ft
Upstream Pool Length at Tailwater Elev.:		Lru =	5.14	ft
Downstream Pool Length at Tailwater Elev.:		Lrd =	5.14	ft
Pool Width at Tailwater Elev.:		2Wr =	10.22	ft
Check Side Slope Ratio: (Wr>=We)			O.K.	
Side Slope Ratio Zw O.K.				
Check Min. End Slope Ratio: (Lru & Lrd >= Le)			O.K.	
End Slope Ratios O.K.				
Check Upstream Length: (Lru >= Xm)			O.K.	
End Slope Ratio Zlu O.K.				
Pool Bottom Elev. at Bottom of Riprap:		El, BR =	374.24	ft
Pool Bottom Elev. at Bottom of Bedding:		El, BB =	373.74	ft
OUTPUT---VOLUMES BELOW WATER SURFACE ELEVATION:				
Volume of Excavation (measured from bottom surface of bedding):		V,pbs =	19.8	cu yd
Volume of Rock Riprap:		V,rs =	10.1	cu yd
Volume of Bedding:		V,bs =	7.5	cu yd

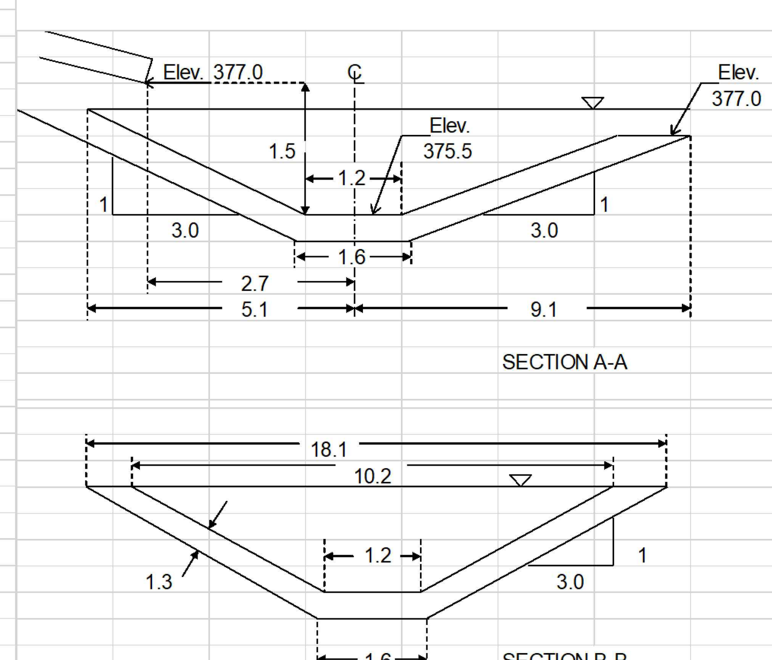

JOB:	CHANDLER'S RIDGE 13-P			
DESIGNER:	TEP	Date:	1/8/2020	
CHECKER:	TSS	Date:		
INPUT DATA:				
Conduit Diameter		D =	3.00	ft
Conduit Discharge:		Q =	66.22	cfs
Conduit Slope at Outlet:		S =	0.01	ft/ft
Conduit Outlet Invert Elevation:		El, CO =	388.61	ft
Tailwater Elevation:		El, TW =	388.61	ft
Outlet Channel Invert Elevation:		El, CH =	388.61	ft
Water Density:		RHO =	1.00	
Bed/Riprap Particle Density: (Default 2.64)		RHOS =	2.64	
D, 50 Riprap Size:		RS =	0.75	ft
Riprap Thickness: (2.5*D, 50 recommended)		RT =	1.88	ft
Bedding Thickness: (6 inch min. rec.) (Enter **0** for geotextile)		BT =	0.50	ft
Side Slope Ratio:		Zw =	3.00	ft/ft
Upstream End Slope Ratio:		Zlu =	3.00	ft/ft
Downstream End Slope Ratio:		Zld =	3.00	ft/ft
Combined End Slope Ratio:		Z1 =	3.00	ft/ft
OUTPUT---POOL LOCATION AND DIMENSIONS:				
Vert. Dist. from Tailwater to Conduit Invert:		Zp =	0.00	ft
Submergence Check: (If Zp < 0 , Use Zp = 0)		Use Zp =	0.00	ft
Beaching Check: [Q/(gD^5)^0.5 <= (1.0+25*D,50/D)]			O.K.	
Beaching Controlled				
Distance from Conduit Exit to C/L Pool:		Xm =	4.90	ft
Pool depth at C/L Below Conduit Invert:		Zp+0.8Zm =	1.62	ft
Pool Bottom Elev:		El,PB =	386.99	ft
Pool Bottom Length:		2Lr2 =	1.42	ft
Pool Bottom Width:		2Wr2 =	1.31	ft
Upstream Pool Length at Tailwater Elev.:		Lru =	5.58	ft
Downstream Pool Length at Tailwater Elev.:		Lrd =	5.58	ft
Pool Width at Tailwater Elev.:		2Wr =	11.05	ft
Check Side Slope Ratio: (Wr>=We)			O.K.	
Side Slope Ratio Zw O.K.				
Check Min. End Slope Ratio: (Lru & Lrd >= Le)			O.K.	
End Slope Ratios O.K.				
Check Upstream Length: (Lru >= Xm)			O.K.	
End Slope Ratio Zlu O.K.				
Pool Bottom Elev. at Bottom of Riprap:		El, BR =	385.11	ft
Pool Bottom Elev. at Bottom of Bedding:		El, BB =	384.61	ft
OUTPUT---VOLUMES BELOW WATER SURFACE ELEVATION:				
Volume of Excavation (measured from bottom surface of bedding):		V,pbs =	36.4	cu yd
Volume of Rock Riprap:		V,rs =	22.1	cu yd
Volume of Bedding:		V,bs =	11.6	cu yd

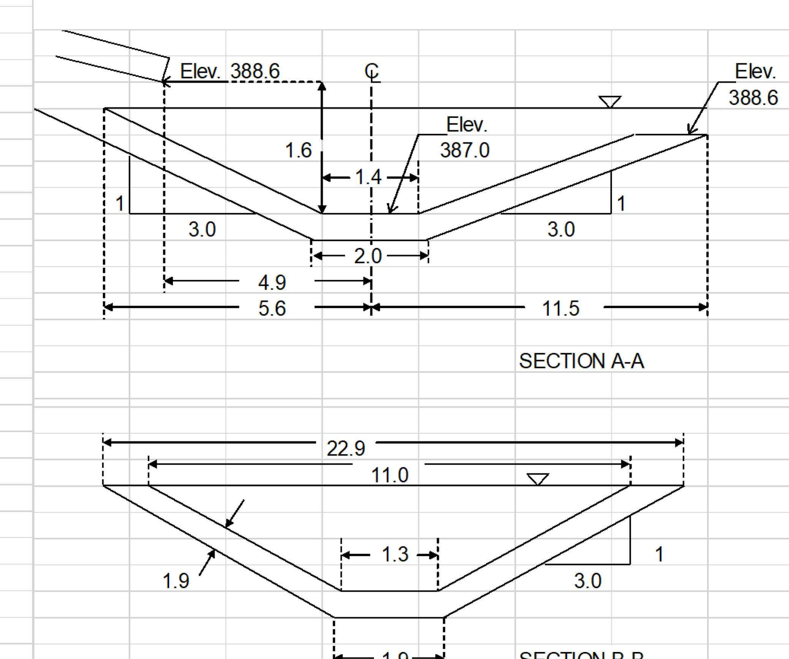

REV	DESCRIPTION	DATE
03	CONSTRUCTION DOCUMENTS 3rd SUBMITTAL	06/17/2020
02	CONSTRUCTION DOCUMENTS 2nd SUBMITTAL	04/15/2020
01	CONSTRUCTION DOCUMENTS 1st SUBMITTAL	01/13/2020

REVISIONS

P:\2017 Projects\170347 Chandlers Ridge\Eng\CAD\DWG\TP SHEET\P_170347_C520_SCM.dwg

NORTH CAROLINA PROFESSIONAL SEAL 20234 ENGINEER THOMAS S. SPEIGHT, JR. 6/17/2020

Bateman Civil Survey Company
Engineers • Surveyors • Planners
2524 Reliance Avenue, Apex, North Carolina 27539
Phone: 919.577.1080 Fax: 919.577.1081
NCBELS FIRM No. C-2378

CHANDLER'S RIDGE
CONSTRUCTION DOCUMENTS
CONSERVATION SUBDIVISION

410 W. YOUNG ST.
ROLESVILLE, NC
WAKE COUNTY

STORMWATER POND ADDITIONAL DETAILS

Project Engineer:	TSS
Designed By:	TEP
Drawn By:	TEP
Checked By:	TSS
Scale:	
Date:	06/17/2020
Project Number:	P170347

SHEET
C522

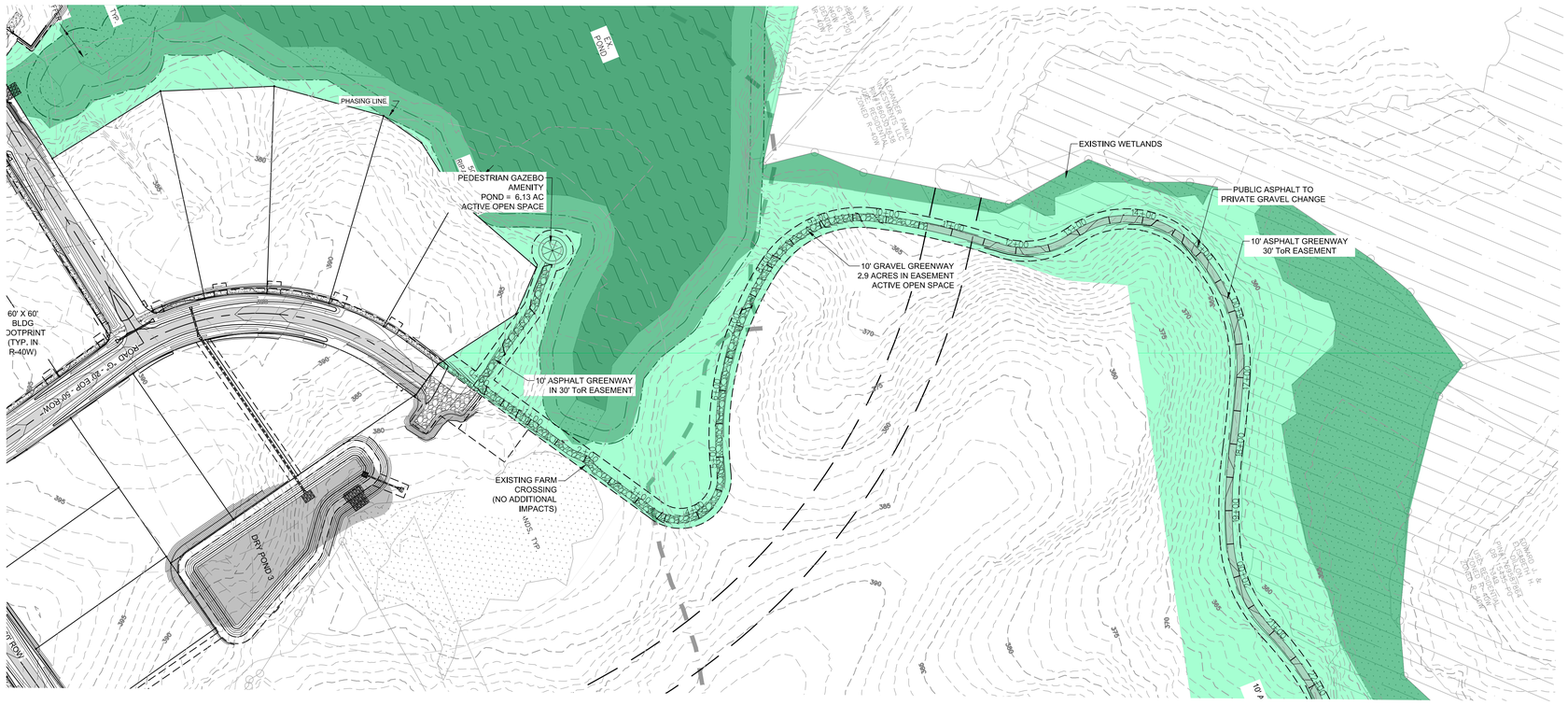

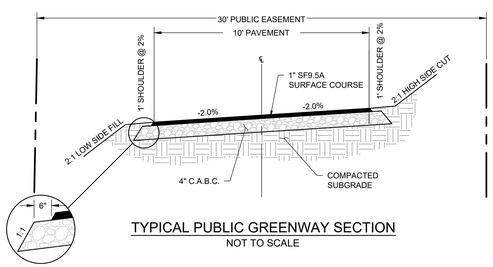

TYPICAL PUBLIC GREENWAY SECTION
NOT TO SCALE

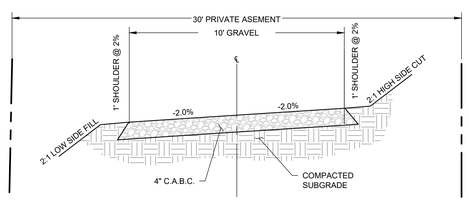

TYPICAL PRIVATE GREENWAY SECTION
NOT TO SCALE

GREENWAY - PLAN
SCALE: 1"=100'
STA: 0+00 - 20+00

NOTE: 1' INTERVAL CONTOURS

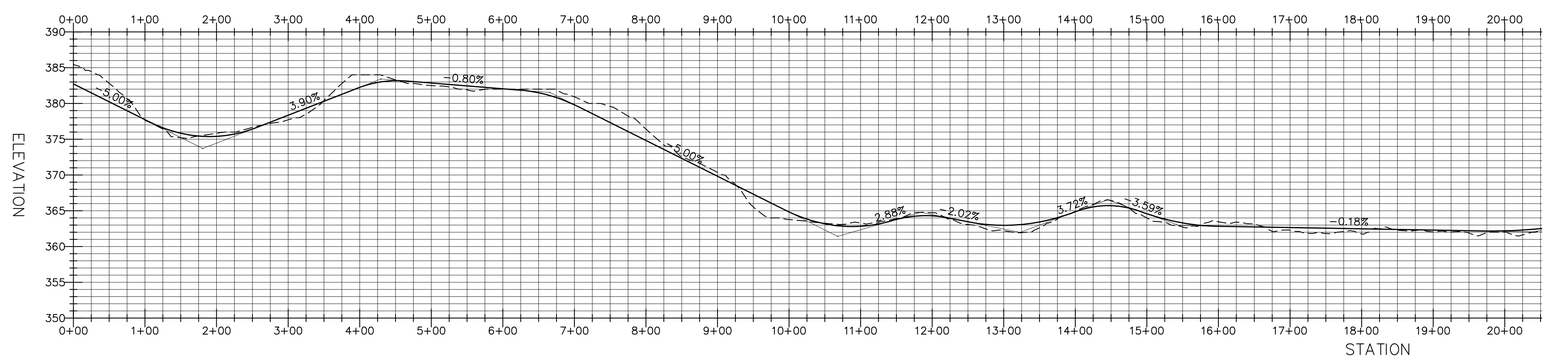

GREENWAY - PROFILE
HOR. SCALE: 1"=100' VER. SCALE: 1"=5'
STA: 00+00 - 20+00

REV	DESCRIPTION	DATE
03	CONSTRUCTION DOCUMENTS 3rd SUBMITTAL	06/17/2020
02	CONSTRUCTION DOCUMENTS 2nd SUBMITTAL	04/15/2020
01	CONSTRUCTION DOCUMENTS 1st SUBMITTAL	01/13/2020

REVISIONS

NORTH Referenced to N.C. GRID (NAD 83)

NORTH CAROLINA PROFESSIONAL SEAL 20234 ENGINEER THOMAS S. SPEDDEN JR.

Bateman Civil Survey Company
Engineers • Surveyors • Planners
2524 Reliance Avenue, Apex, North Carolina 27539
Phone: 919.577.1080 Fax: 919.577.1081
NCBELS FIRM No. C-2378

CHANDLER'S RIDGE
CONSTRUCTION DOCUMENTS
CONSERVATION SUBDIVISION
410 W. YOUNG ST.
ROLESVILLE, NC
WAKE COUNTY

GREENWAY
PLAN & PROFILE

Project Engineer:	TSS
Designed By:	TEP
Drawn By:	TEP
Checked By:	TSS
Scale:	1" = 50'
Date:	06/17/2020
Project Number:	P170347

SHEET
C590

P:\2017 Projects\170347 Chandlers Ridge\Eng\CAD\DWG\TP SHEET\P_170347_C590 GRADING BLOWUPS_GREENWAY.dwg

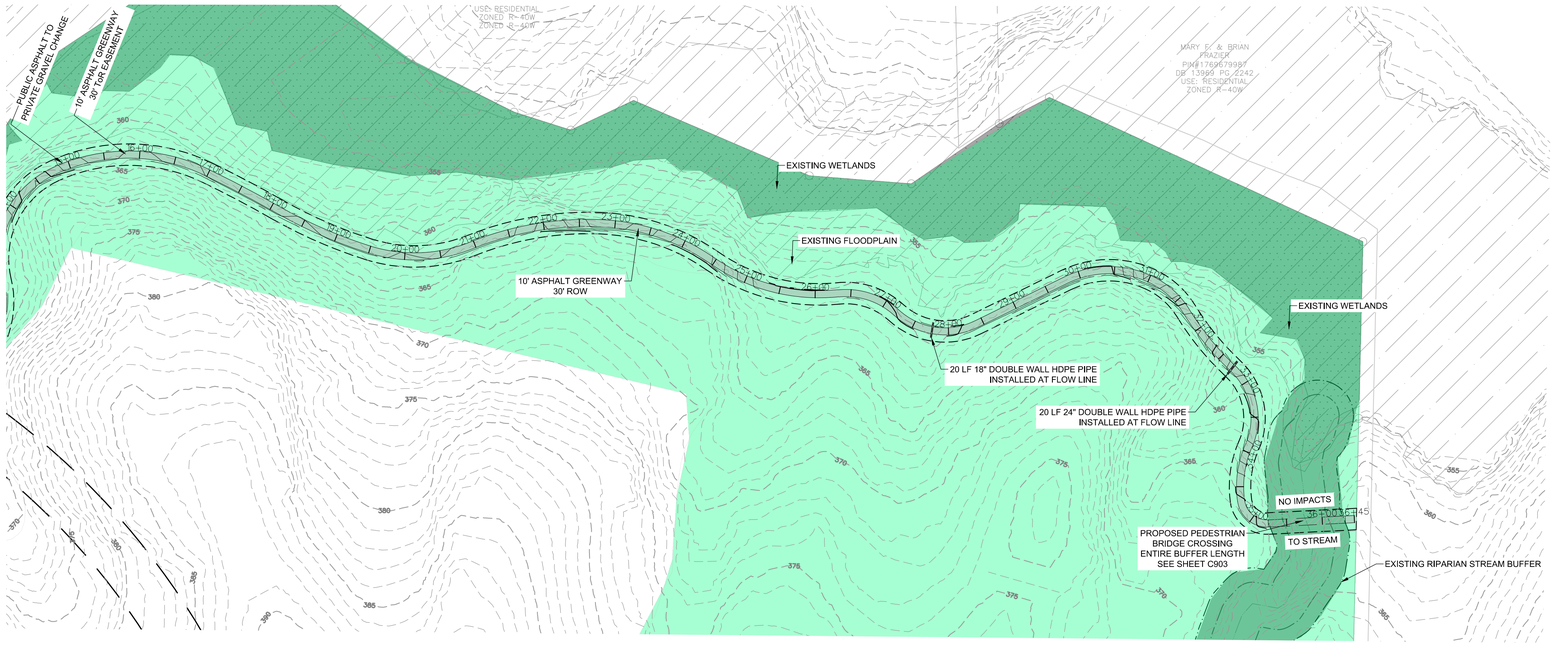

GREENWAY - PLAN
SCALE: 1"=100'
STA: 20+00 - 39+61

NOTE: 1' INTERVAL CONTOURS

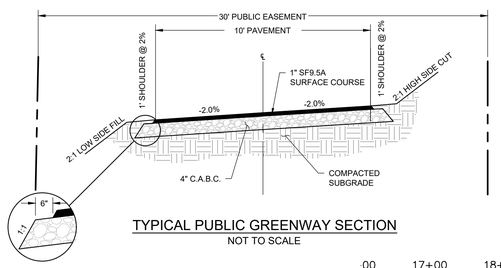

TYPICAL PUBLIC GREENWAY SECTION
NOT TO SCALE

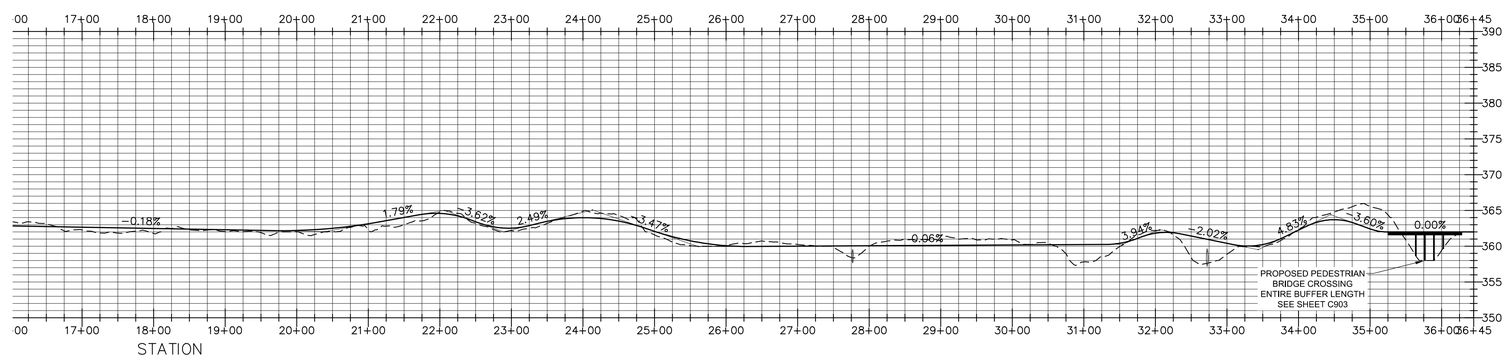

GREENWAY - PROFILE
HOR. SCALE: 1"=100' VER. SCALE: 1"=5'
STA: 20+00 - 39+61

REV	DESCRIPTION	DATE
03	CONSTRUCTION DOCUMENTS 3rd SUBMITTAL	06/17/2020
02	CONSTRUCTION DOCUMENTS 2nd SUBMITTAL	04/15/2020
01	CONSTRUCTION DOCUMENTS 1st SUBMITTAL	01/13/2020

REVISIONS

P:\2017 Projects\170347 Chandlers Ridge\Eng\CAD\DWG\TP SHEET\P_170347_C590 GRADING BLOWUPS_GREENWAY.dwg

NORTH CAROLINA PROFESSIONAL SEAL 20234 ENGINEER THOMAS S. SPEISER

Bateman Civil Survey Company
Engineers • Surveyors • Planners
2524 Reliance Avenue, Apex, North Carolina 27539
Phone: 919.577.1080 Fax: 919.577.1081
NCBELS FIRM No. C-2378

CHANDLER'S RIDGE
CONSTRUCTION DOCUMENTS
CONSERVATION SUBDIVISION
410 W. YOUNG ST.
ROLESVILLE, NC
WAKE COUNTY

GREENWAY
PLAN & PROFILE

Project Engineer:	TSS
Designed By:	TEP
Drawn By:	TEP
Checked By:	TSS
Scale:	AS NOTED
Date:	06/17/2020
Project Number:	P170347

SHEET
C591

LEGEND:

- EXISTING POND
- EXISTING WETLANDS
- PROPOSED PHASING LINE
- EXISTING TOWN OF ROLESVILLE ETJ
- EXISTING STREAM
- 50' STREAM AND POND RIPARIAN BUFFER
- DEDICATED PRIMARY PROTECTED OPEN SPACE
- DEDICATED SECONDARY PROTECTED OPEN SPACE
- PROPOSED ASPHALT PAVEMENT
- PROPOSED RIGHT OF WAY
- PROPOSED SETBACK
- PROPOSED EASEMENT
- W — PROPOSED WATER MAIN
- SS — PROPOSED SEWER MAIN
- FM — PROPOSED FORCE MAIN

PROPOSED UTILITY SEPARATION:

1. WATER MAINS SHALL BE LAID AT LEAST 10 FEET HORIZONTALLY FROM EXISTING OR PROPOSED SEWERS, UNLESS LOCAL CONDITIONS OR BARRIERS PREVENT A 10-FOOT HORIZONTAL SEPARATION IN WHICH CASE;

a. THE WATER MAIN IS LAID IN A SEPARATE TRENCH, WITH THE ELEVATION OF THE BOTTOM OF THE WATER MAIN AT LEAST 18 INCHES ABOVE THE TOP OF THE SEWER; OR

b. THE WATER MAIN IS LAID IN THE SAME TRENCH AS THE SEWER WITH THE WATER MAIN LOCATED AT ONE SIDE OF A BENCH OF UNDISTURBED EARTH, AND WITH THE ELEVATION OF THE BOTTOM OF THE WATER MAIN AT LEAST 18 INCHES ABOVE THE TOP TO THE SEWER.

2. CROSSING A WATER MAIN OVER A SEWER. WHENEVER IT IS NECESSARY FOR A WATER MAIN TO CROSS OVER A SEWER, THE WATER MAIN SHALL BE LAID AT SUCH AN ELEVATION THAT THE BOTTOM OF THE WATER MAIN IS AT LEAST 18 INCHES ABOVE THE TOP OF THE SEWER, UNLESS LOCAL CONDITIONS OR BARRIERS PREVENT AN 18 INCH VERTICAL SEPARATION, IN WHICH CASE BOTH THE WATER MAIN AND SEWER SHALL BE CONSTRUCTED OF FERROUS MATERIALS AND WITH JOINTS THAT ARE EQUIVALENT TO WATER MAIN STANDARDS FOR A DISTANCE OF 10 FEET ON EACH SIDE OF THE POINT OF CROSSING.

3. CROSSING A WATER MAIN UNDER A SEWER. WHENEVER IT IS NECESSARY FOR A WATER MAIN TO CROSS UNDER A SEWER, BOTH THE WATER MAIN AND THE SEWER SHALL BE CONSTRUCTED OF FERROUS MATERIALS AND WITH JOINTS EQUIVALENT TO WATER MAIN STANDARDS FOR A DISTANCE OF 10 FEET ON EACH SIDE OF THE POINT OF CROSSING. A SECTION OF WATER MAIN PIPE SHALL BE CENTERED AT THE POINT OF CROSSING.

WATER NOTES:

1. AS INDICATED, ALL WATERLINES SHALL BE DUCTILE IRON PIPE MEETING THE REQUIREMENTS OF ANSI-AWWA C151 PRESSURE CLASS 350 OR SOFT COPPER TYPE K PIPE PER ASTM B88. IF PVC WATERLINE IS INDICATED ON THE PLANS IT SHALL MEET THE REQUIREMENTS OF AWWA C-900; CLASS 200.

2. ALL WATERLINES SHALL HAVE A MINIMUM OF 3.5 FEET OF COVER.

3. TESTING NOTES:

PRESSURE:
LEAKAGE SHALL NOT EXCEED THE MAXIMUM ALLOWABLE LEAKAGE SPECIFIED IN AWWA C 600. MINIMUM TEST PRESSURE SHALL BE 150 PSI FOR DOMESTIC AND 200 PSI FOR FIRE PROTECTION.
BACTERIOLOGICAL:
TWO SAMPLES FOR BACTERIOLOGICAL SAMPLING SHALL BE COLLECTED AT LEAST 24 HOURS APART. IF CONTAMINATION IS INDICATED, THEN THE DISINFECTION PROCEDURE AND TESTING SHALL BE REPEATED UNTIL SATISFACTORY RESULTS ARE OBTAINED.

4. THE CHLORINE IN HEAVILY CHLORINATED WATER FLUSHED FROM MAINS NEEDS TO BE NEUTRALIZED BEFORE DISCHARGE. CONTRACTORS SHALL NEUTRALIZE HEAVILY CHLORINATED WATER FLUSHED FROM MAINS PRIOR TO DISCHARGE OR TRANSPORT ALL HEAVILY CHLORINATED WATER OFFSITE FOR PROPER DISPOSAL.

5. PAINT VALVE COVERS, FIRE HYDRANTS AND OTHER WATER APPARATUS TO MEET THE LOCAL JURISDICTIONAL REQUIREMENTS.

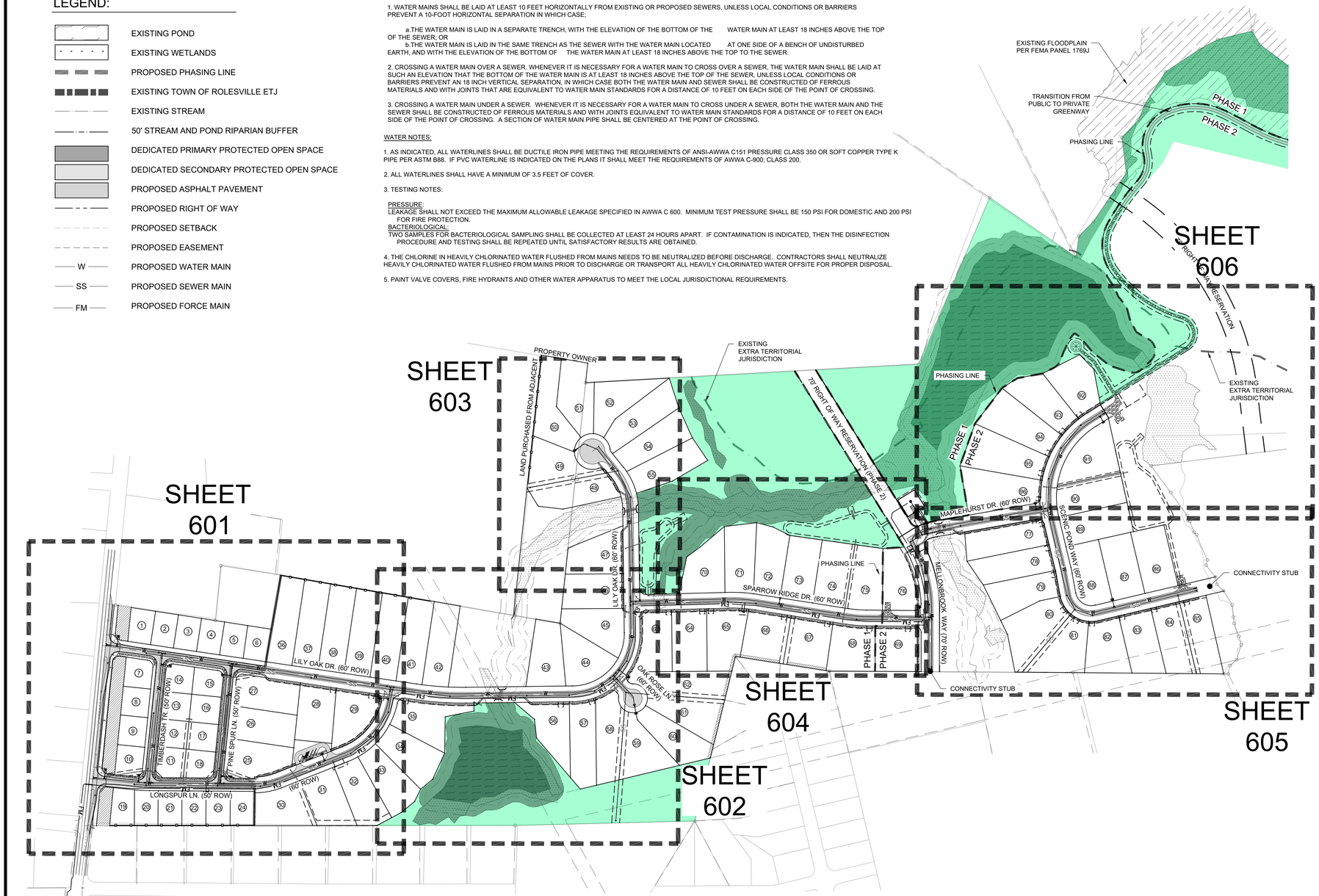

SITE PERMITTING APPROVAL

Water and Sewer Permits (If applicable)

The City of Raleigh consents to the connection and extension of the City's **Public Sewer System** as shown on this plan. The material and Construction methods used for this project shall conform to the standards and specifications of the City's Public Utilities Handbook. **City of Raleigh Public Utilities Department Permit #** _____

The City of Raleigh consents to the connection and extension of the City's **Public Water System** as shown on this plan. The material and Construction methods used for this project shall conform to the standards and specifications of the City's Public Utilities Handbook. **City of Raleigh Public Utilities Department Permit #** _____

The City of Raleigh consents to the connection to its public sewer system and extension of the **private sewer collection** system as shown on this plan. The material and constructions methods used for this project shall conform to the standards and specifications of the City's Public Utilities Handbook.

City of Raleigh Public Utilities Department Permit # _____

CITY OF RALEIGH - PLANS AUTHORIZED FOR CONSTRUCTION

Electronic Approval: This approval is being issued electronically. This approval is valid only upon the signature of a City of Raleigh Review Officer below. The City will retain a copy of the approved plans. Any work authorized by this approval must proceed in accordance with the plans kept on file with the City. This electronic approval may not be edited once issued. Any modification to this approval once issued will invalidate this approval.

City of Raleigh Development Approval _____
Raleigh Water Review Officer

STANDARD UTILITY NOTES (AS APPLICABLE):

1. ALL MATERIALS & CONSTRUCTION METHODS SHALL BE IN ACCORDANCE WITH CITY OF RALEIGH DESIGN STANDARDS, DETAILS & SPECIFICATIONS (REFERENCE: CORPUD HANDBOOK, CURRENT EDITION)

2. UTILITY SEPARATION REQUIREMENTS;

A) A DISTANCE OF 100' SHALL BE MAINTAINED BETWEEN SANITARY SEWER & ANY PRIVATE OR PUBLIC WATER SUPPLY SOURCE SUCH AS AN IMPOUNDED RESERVOIR USED AS A SOURCE OF DRINKING WATER. IF ADEQUATE LATERAL SEPARATION CANNOT BE ACHIEVED, FERROUS SANITARY SEWER PIPE SHALL BE SPECIFIED & INSTALLED TO WATERLINE SPECIFICATIONS. HOWEVER, THE MINIMUM SEPARATION SHALL NOT BE LESS THAN 25' FROM A PRIVATE WELL OR 50' FROM A PUBLIC WELL

B) WHEN INSTALLING WATER &/OR SEWER MAINS, THE HORIZONTAL SEPARATION BETWEEN UTILITIES SHALL BE 10'. IF THIS SEPARATION CANNOT BE MAINTAINED DUE TO EXISTING CONDITIONS, THE VARIATION ALLOWED IS THE WATER MAIN IN A SEPARATE TRENCH WITH THE ELEVATION OF THE WATER MAIN AT LEAST 18" ABOVE THE TOP OF THE SEWER & MUST BE APPROVED BY THE PUBLIC UTILITIES DIRECTOR. ALL DISTANCES ARE MEASURED FROM OUTSIDE DIAMETER TO OUTSIDE DIAMETER

C) WHERE IT IS IMPOSSIBLE TO OBTAIN PROPER SEPARATION, OR ANYTIME A SANITARY SEWER PASSES OVER A WATERMAIN, DIP MATERIALS OR STEEL ENCASEMENT EXTENDED 10' ON EACH SIDE OF CROSSING MUST BE SPECIFIED & INSTALLED TO WATERLINE SPECIFICATIONS

D) 5.0' MINIMUM HORIZONTAL SEPARATION IS REQUIRED BETWEEN ALL SANITARY SEWER & STORM SEWER FACILITIES, UNLESS DIP MATERIAL IS SPECIFIED FOR SANITARY SEWER

E) MAINTAIN 18" MIN. VERTICAL SEPARATION AT ALL WATERMAIN & RCP STORM DRAIN CROSSINGS; MAINTAIN 24" MIN. VERTICAL SEPARATION AT ALL SANITARY SEWER & RCP STORM DRAIN CROSSINGS. WHERE ADEQUATE SEPARATIONS CANNOT BE ACHIEVED, SPECIFY DIP MATERIALS & A CONCRETE CRADLE HAVING 6" MIN. CLEARANCE (PER CORPUD DETAILS W-41 & S-49)

F) ALL OTHER UNDERGROUND UTILITIES SHALL CROSS WATER & SEWER FACILITIES WITH 18" MIN. VERTICAL SEPARATION REQUIRED

3. ANY NECESSARY FIELD REVISIONS ARE SUBJECT TO REVIEW & APPROVAL OF AN AMENDED PLAN &/OR PROFILE BY THE CITY OF RALEIGH PUBLIC UTILITIES DEPARTMENT PRIOR TO CONSTRUCTION

4. CONTRACTOR SHALL MAINTAIN CONTINUOUS WATER & SEWER SERVICE TO EXISTING RESIDENCES & BUSINESSES THROUGHOUT CONSTRUCTION OF PROJECT. ANY NECESSARY SERVICE INTERRUPTIONS SHALL BE PRECEDED BY A 24 HOUR ADVANCE NOTICE TO THE CITY OF RALEIGH PUBLIC UTILITIES DEPARTMENT

5. 3.0' MINIMUM COVER IS REQUIRED ON ALL WATER MAINS & SEWER FORCEMAINS. 4.0' MINIMUM COVER IS REQUIRED ON ALL REUSE MAINS

6. IT IS THE DEVELOPER'S RESPONSIBILITY TO ABANDON OR REMOVE EXISTING WATER & SEWER SERVICES NOT BEING USED IN REDEVELOPMENT OF A SITE UNLESS OTHERWISE DIRECTED BY THE CITY OF RALEIGH PUBLIC UTILITIES DEPARTMENT. THIS INCLUDES ABANDONING TAP AT MAIN & REMOVAL OF SERVICE FROM ROW OR EASEMENT PER CORPUD HANDBOOK PROCEDURE

7. INSTALL ¾" COPPER" WATER SERVICES WITH METERS LOCATED AT ROW OR WITHIN A 2'X2' WATERLINE EASEMENT IMMEDIATELY ADJACENT. NOTE: IT IS THE APPLICANT'S RESPONSIBILITY TO PROPERLY SIZE THE WATER SERVICE FOR EACH CONNECTION TO PROVIDE ADEQUATE FLOW & PRESSURE

8. INSTALL 4" PVC" SEWER SERVICES @ 1.0% MINIMUM GRADE WITH CLEANOUTS LOCATED AT ROW OR EASEMENT LINE & SPACED EVERY 75 LINEAR FEET MAXIMUM

9. PRESSURE REDUCING VALVES ARE REQUIRED ON ALL WATER SERVICES EXCEEDING 80 PSI; BACKWATER VALVES ARE REQUIRED ON ALL SANITARY SEWER SERVICES HAVING BUILDING DRAINS LOWER THAN 1.0' ABOVE THE NEXT UPSTREAM MANHOLE

10. ALL ENVIRONMENTAL PERMITS APPLICABLE TO THE PROJECT MUST BE OBTAINED FROM NCDWQ, USACE &/OR FEMA FOR ANY RIPARIAN BUFFER, WETLAND &/OR FLOODPLAIN IMPACTS (RESPECTIVELY) PRIOR TO CONSTRUCTION.

11. NCDOT / RAILROAD ENCROACHMENT AGREEMENTS ARE REQUIRED FOR ANY UTILITY WORK (INCLUDING MAIN EXTENSIONS & SERVICE TAPS) WITHIN STATE OR RAILROAD ROW PRIOR TO CONSTRUCTION

12. CROSS-CONNECTION CONTROL PROTECTION DEVICES ARE REQUIRED BASED ON DEGREE OF HEALTH HAZARD INVOLVED AS LISTED IN APPENDIX-B OF THE RULES GOVERNING PUBLIC WATER SYSTEMS IN NORTH CAROLINA. THESE GUIDELIN ES ARE THE MINIMUM REQUIREMENTS. THE DEVICES SHALL MEET AMERICAN SOCIETY OF SANITARY ENGINEERING (ASSE) STANDARDS OR BE ON THE UNIVERSITY OF SOUTHERN CALIFORNIA APPROVAL
THE DEVICES SHALL BE INSTALLED AND TESTED (BOTH INITIAL AND PERIODIC TESTING THEREAFTER) IN ACCORDANCE WITH THE MANUFACTURER'S RECOMMENDATIONS OR THE LOCAL CROSS-CONNECTION CONTROL PROGRAM, WHICHEVER IS MORE STRINGENT. CONTACT JOANIE HARTLEY AT (919) 996-5923 OR JOANIE.HARTLEY@RALEIGHNC.GOV FOR MORE INFORMATION

SEWER NOTES:

1. ALL PVC SEWER PIPES ARE TO BE SDR-35 SPEC. UNLESS SPECIFIED OTHERWISE.

2. SANITARY SEWER CLEANOUTS LOCATED IN PAVEMENT AREAS SHALL BE HEAVY DUTY TRAFFIC BEARING CASTINGS.

3. UNLESS OTHERWISE NOTED, ALL SANITARY SEWER MANHOLES ARE 4' DIA.

4. MANHOLES LOCATED IN PAVEMENT, CONCRETE OR OTHER TRAFFIC AREAS SHALL BE SET AT GRADE. MANHOLES LOCATED IN OTHER AREAS (I.E. GRASS OR WOODED AREAS) SHALL HAVE THEIR RIMS RAISED SIX INCHES ABOVE THE SURROUNDING GRADE. MANHOLES SUBJECT TO POSSIBLE WATER INFILTRATION SHALL HAVE WATERTIGHT, BOLTED LIDS.

5. MINIMUM REQUIRED SLOPES FOR SEWER SERVICES:
4" SEWER SERVICE - 2.00% SLOPE
6" SEWER SERVICE - 1.00% SLOPE
8" SEWER SERVICE - 0.50% SLOPE

6. UNLESS OTHERWISE NOTED, LOCATE SANITARY SERVICE CLEANOUTS AT ALL HORIZONTAL OR VERTICAL CHANGES IN DIRECTION. MAXIMUM SPACING BETWEEN CLEANOUTS SHALL BE 75 FEET.

7. SEWER LINES LESS THAN 3 FEET OF COVER SHALL BE CLASS 50 DUCTILE IRON PIPE. SEWER LINES WITH GREATER THAN 3 FEET OF COVER SHALL BE AS NOTED BELOW:
4" SEWER SERVICE - SCH 80
6" SEWER SERVICE - SCH 80
8" SEWER SERVICE - SDR-35

8. SEWER LINES UNDER CONSTRUCTION SHALL BE PROTECTED FROM DIRT, DEBRIS OR OTHER CONTAMINANTS ENTERING THE NEW SYSTEM. A MECHANICAL PLUG SHALL BE UTILIZED BOTH IMMEDIATELY UPSTREAM OF THE NEW CONSTRUCTION AND AT THE FIRST MANHOLE DOWNSTREAM IN THE EXISTING SYSTEM. EXISTING STRUCTURES, PIPING AND APPURTENANCES SHALL BE PROTECTED FROM ANY INFLOW OF WATER, DIRT OR DEBRIS DUE TO NEW CONSTRUCTION CONNECTING TO OR IN THE VICINITY OF THE EXISTING SYSTEM. CONTRACTOR TO REMOVE DEBRIS AND PLUG PRIOR TO OCCUPANCY.

9. ALL MANHOLES COVERS SHALL BE PAINTED TO LOCAL JURISDICTIONAL REQUIREMENTS.

SEPARATION OF SANITARY SEWERS AND STORM SEWERS:

1. A 24" VERTICAL SEPARATION SHALL BE PROVIDED BETWEEN STORM SEWER AND SANITARY SEWER LINES OR BOTH THE SANITARY AND THE STORM LINES SHALL BE CONSTRUCTED OF FERROUS MATERIALS.

PHASING SUMMARY

PHASE 1 AREA	91.40 ACRES
PHASE 1 OPEN SPACE	36.57 ACRES (40.01%)
PHASE 2 AREA	80.13 ACRES
PHASE 2 OPEN SPACE	32.10 ACRES (40.06%)

1"=200' 200 0 200 400

NORTH Referenced to N.C. GRID (NAD 83)

REV	DESCRIPTION	DATE
03	CONSTRUCTION DOCUMENTS 3rd SUBMITTAL	06/17/2020
02	CONSTRUCTION DOCUMENTS 2nd SUBMITTAL	04/15/2020
01	CONSTRUCTION DOCUMENTS 1st SUBMITTAL	01/13/2020

REVISIONS

Bateman Civil Survey Company
Engineers • Surveyors • Planners
2524 Reliance Avenue, Apex, North Carolina 27539
Phone: 919.577.1080 Fax: 919.577.1081
NCBELS FIRM No. C-2378

CHANDLER'S RIDGE
CONSTRUCTION DOCUMENTS
CONSERVATION SUBDIVISION
410 W. YOUNG ST.
ROLESVILLE, NC
WAKE COUNTY

OVERALL
UTILITY PLAN

Project Engineer:	TSS
Designed By:	TEP
Drawn By:	TEP
Checked By:	TSS
Scale:	1" = 200'
Date:	06/17/2020
Project Number:	P170347

SHEET
C600

P:\2017 Projects\170347 Chandlers Ridge\Eng\CAD\DWG\TP SHEETS\P_170347_C600_UTILITIES.dwg

LEGEND:

- EXISTING POND
- EXISTING WETLANDS
- PROPOSED PHASING LINE
- EXISTING TOWN OF ROLESVILLE ETJ
- EXISTING STREAM
- 50' STREAM AND POND RIPARIAN BUFFER
- DEDICATED PRIMARY PROTECTED OPEN SPACE
- DEDICATED SECONDARY PROTECTED OPEN SPACE
- PROPOSED ASPHALT PAVEMENT
- PROPOSED RIGHT OF WAY
- PROPOSED SETBACK
- PROPOSED EASEMENT
- W — PROPOSED WATER MAIN
- SS — PROPOSED SEWER MAIN
- FM — PROPOSED FORCE MAIN
- PROPOSED 4" SEWER SERVICE
- WM — PROPOSED ¾" WATER SERVICE

SITE PERMITTING APPROVAL

Water and Sewer Permits (If applicable)

The City of Raleigh consents to the connection and extension of the City's **Public Sewer System** as shown on this plan. The material and Construction methods used for this project shall conform to the standards and specifications of the City's Public Utilities Handbook. **City of Raleigh Public Utilities Department Permit #** _____

The City of Raleigh consents to the connection and extension of the City's **Public Water System** as shown on this plan. The material and Construction methods used for this project shall conform to the standards and specifications of the City's Public Utilities Handbook. **City of Raleigh Public Utilities Department Permit #** _____

The City of Raleigh consents to the connection to its public sewer system and extension of the **private sewer collection** system as shown on this plan. The material and constructions methods used for this project shall conform to the standards and specifications of the City's Public Utilities Handbook.

City of Raleigh Public Utilities Department Permit # _____

CITY OF RALEIGH - PLANS AUTHORIZED FOR CONSTRUCTION

Electronic Approval: This approval is being issued electronically. This approval is valid only upon the signature of a City of Raleigh Review Officer below. The City will retain a copy of the approved plans. Any work authorized by this approval must proceed in accordance with the plans kept on file with the City. This electronic approval may not be edited once issued. Any modification to this approval once issued will invalidate this approval.

City of Raleigh Development Approval _____

Raleigh Water Review Officer

REV	DESCRIPTION	DATE
03	CONSTRUCTION DOCUMENTS 3rd SUBMITTAL	06/17/2020
02	CONSTRUCTION DOCUMENTS 2nd SUBMITTAL	04/15/2020
01	CONSTRUCTION DOCUMENTS 1st SUBMITTAL	01/13/2020

REVISIONS

P:\2017 Projects\170347 Chandlers Ridge\Eng\CAD\DWG\TP SHEET\P_170347_C600_UTILITIES.dwg

NORTH CAROLINA PROFESSIONAL SEAL 20234 ENGINEER THOMAS S. SPEIDELL 6/17/2020

Bateman Civil Survey Company
Engineers • Surveyors • Planners
2524 Reliance Avenue, Apex, North Carolina 27539
Phone: 919.577.1080 Fax: 919.577.1081
NCBELS FIRM No. C-2378

SEE SHEET C602

MATCHLINE 2

CHANDLER'S RIDGE
CONSTRUCTION DOCUMENTS
CONSERVATION SUBDIVISION

410 W. YOUNG ST.
ROLESVILLE, NC
WAKE COUNTY

WEST UTILITY PLAN

Project Engineer:	TSS
Designed By:	TEP
Drawn By:	TEP
Checked By:	TSS
Scale:	1" = 50'
Date:	06/17/2020
Project Number:	P170347

SHEET

C601

LEGEND:

- EXISTING POND
- EXISTING WETLANDS
- PROPOSED PHASING LINE
- EXISTING TOWN OF ROLESVILLE ETJ
- EXISTING STREAM
- 50' STREAM AND POND RIPARIAN BUFFER
- DEDICATED PRIMARY PROTECTED OPEN SPACE
- DEDICATED SECONDARY PROTECTED OPEN SPACE
- PROPOSED ASPHALT PAVEMENT
- PROPOSED RIGHT OF WAY
- PROPOSED SETBACK
- PROPOSED EASEMENT
- W — PROPOSED WATER MAIN
- SS — PROPOSED SEWER MAIN
- FM — PROPOSED FORCE MAIN

SITE PERMITTING APPROVAL

Water and Sewer Permits (If applicable)

The City of Raleigh consents to the connection and extension of the City's **Public Sewer System** as shown on this plan. The material and Construction methods used for this project shall conform to the standards and specifications of the City's Public Utilities Handbook. **City of Raleigh Public Utilities Department Permit #** _____

The City of Raleigh consents to the connection and extension of the City's **Public Water System** as shown on this plan. The material and Construction methods used for this project shall conform to the standards and specifications of the City's Public Utilities Handbook. **City of Raleigh Public Utilities Department Permit #** _____

The City of Raleigh consents to the connection to its public sewer system and extension of the **private sewer collection** system as shown on this plan. The material and constructions methods used for this project shall conform to the standards and specifications of the City's Public Utilities Handbook.

City of Raleigh Public Utilities Department Permit # _____

CITY OF RALEIGH - PLANS AUTHORIZED FOR CONSTRUCTION

Electronic Approval: This approval is being issued electronically. This approval is valid only upon the signature of a City of Raleigh Review Officer below. The City will retain a copy of the approved plans. Any work authorized by this approval must proceed in accordance with the plans kept on file with the City. This electronic approval may not be edited once issued. Any modification to this approval once issued will invalidate this approval.

City of Raleigh Development Approval _____

Raleigh Water Review Officer

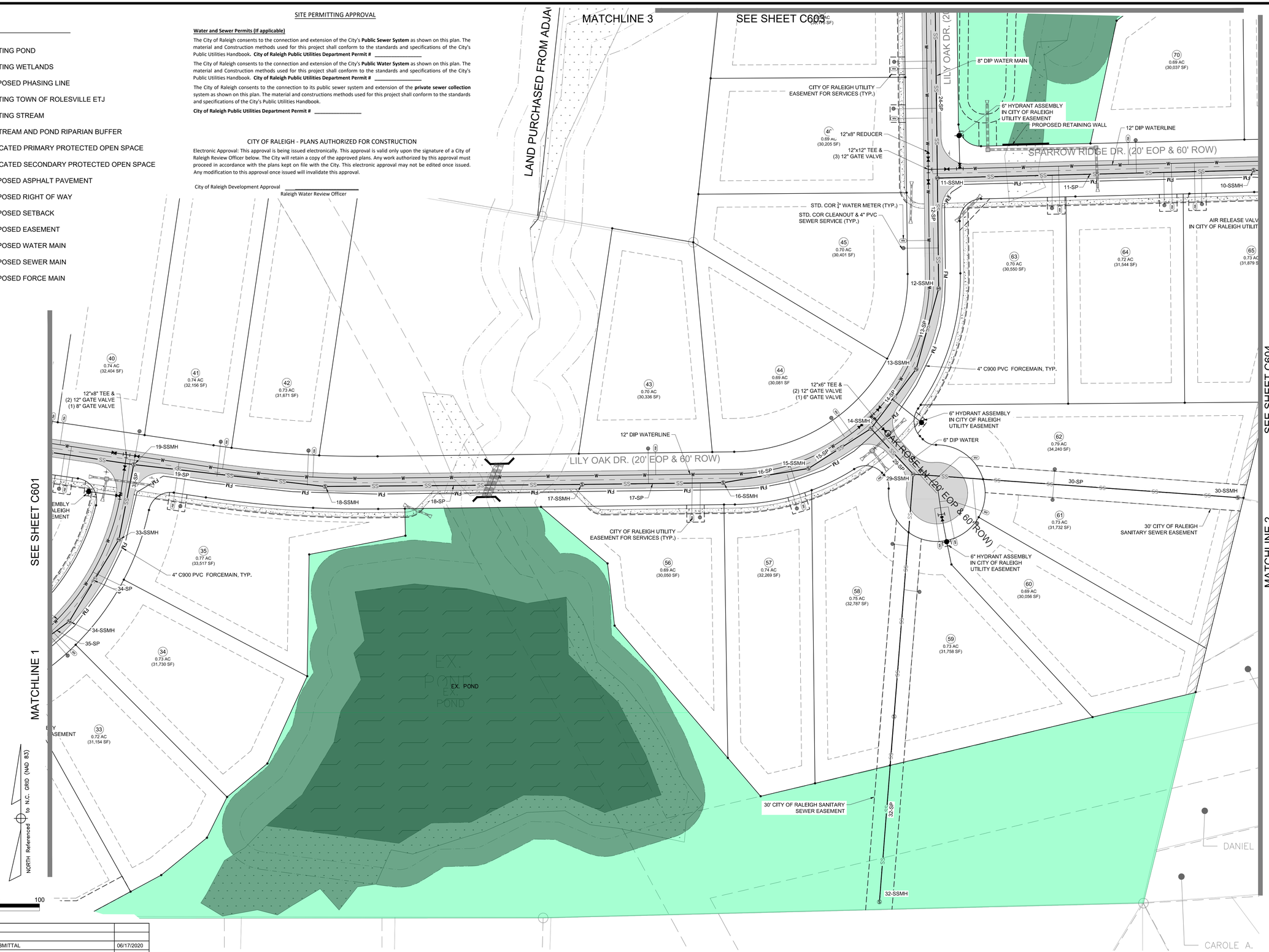

REV	DESCRIPTION	DATE
03	CONSTRUCTION DOCUMENTS 3rd SUBMITTAL	06/17/2020
02	CONSTRUCTION DOCUMENTS 2nd SUBMITTAL	04/15/2020
01	CONSTRUCTION DOCUMENTS 1st SUBMITTAL	01/13/2020

REVISIONS

P:\2017 Projects\170347 Chandlers Ridge\Eng\CAD\DWG\TP SHEET\P_170347_C600_UTILITIES.dwg

NORTH CAROLINA PROFESSIONAL SEAL 20234 ENGINEER THOMAS S. SPEIDER

Bateman Civil Survey Company
Engineers • Surveyors • Planners
2524 Reliance Avenue, Apex, North Carolina 27539
Phone: 919.577.1080 Fax: 919.577.1081
NCBELS FIRM No. C-2378

CHANDLER'S RIDGE
CONSTRUCTION DOCUMENTS
CONSERVATION SUBDIVISION
410 W. YOUNG ST.
ROLESVILLE, NC
WAKE COUNTY

WEST UTILITY PLAN

Project Engineer:	TSS
Designed By:	TEP
Drawn By:	TEP
Checked By:	TSS
Scale:	1" = 50'
Date:	06/17/2020
Project Number:	P170347

SHEET
C602

LEGEND:

- EXISTING POND
- EXISTING WETLANDS
- PROPOSED PHASING LINE
- EXISTING TOWN OF ROLESVILLE ETJ
- EXISTING STREAM
- 50' STREAM AND POND RIPARIAN BUFFER
- DEDICATED PRIMARY PROTECTED OPEN SPACE
- DEDICATED SECONDARY PROTECTED OPEN SPACE
- PROPOSED ASPHALT PAVEMENT
- PROPOSED RIGHT OF WAY
- PROPOSED SETBACK
- PROPOSED EASEMENT
- W — PROPOSED WATER MAIN
- SS — PROPOSED SEWER MAIN
- FM — PROPOSED FORCE MAIN

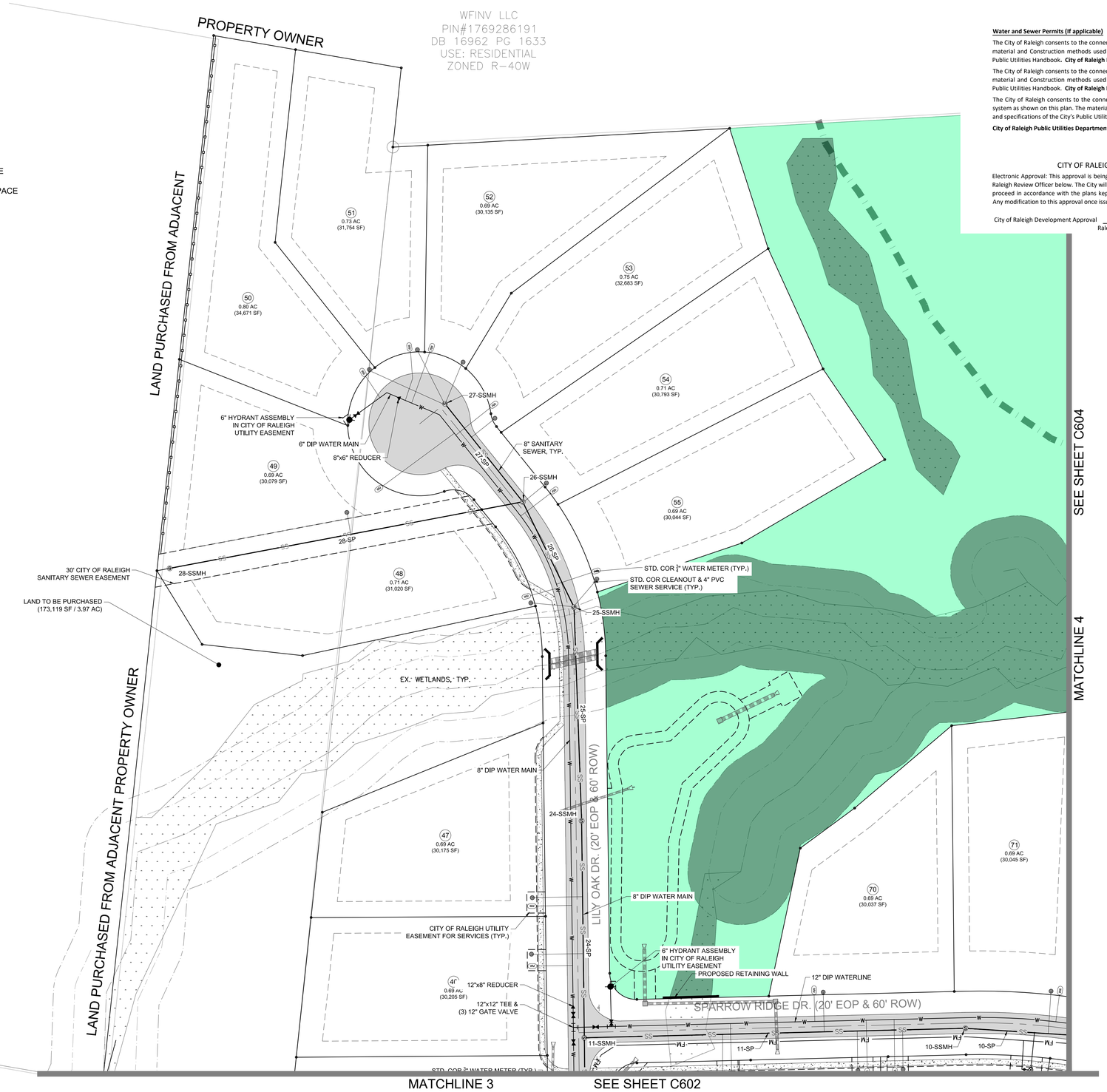

SITE PERMITTING APPROVAL

Water and Sewer Permits (If applicable)

The City of Raleigh consents to the connection and extension of the City's **Public Sewer System** as shown on this plan. The material and Construction methods used for this project shall conform to the standards and specifications of the City's Public Utilities Handbook. **City of Raleigh Public Utilities Department Permit #** _____

The City of Raleigh consents to the connection and extension of the City's **Public Water System** as shown on this plan. The material and Construction methods used for this project shall conform to the standards and specifications of the City's Public Utilities Handbook. **City of Raleigh Public Utilities Department Permit #** _____

The City of Raleigh consents to the connection to its public sewer system and extension of the **private sewer collection** system as shown on this plan. The material and constructions methods used for this project shall conform to the standards and specifications of the City's Public Utilities Handbook.

City of Raleigh Public Utilities Department Permit # _____

CITY OF RALEIGH - PLANS AUTHORIZED FOR CONSTRUCTION

Electronic Approval: This approval is being issued electronically. This approval is valid only upon the signature of a City of Raleigh Review Officer below. The City will retain a copy of the approved plans. Any work authorized by this approval must proceed in accordance with the plans kept on file with the City. This electronic approval may not be edited once issued. Any modification to this approval once issued will invalidate this approval.

City of Raleigh Development Approval _____
Raleigh Water Review Officer

REV	DESCRIPTION	DATE
03	CONSTRUCTION DOCUMENTS 3rd SUBMITTAL	06/17/2020
02	CONSTRUCTION DOCUMENTS 2nd SUBMITTAL	04/15/2020
01	CONSTRUCTION DOCUMENTS 1st SUBMITTAL	01/13/2020

REVISIONS

1"=50' 50 0 50 100

NORTH Referenced to N.C. GRID (NAD 83)

NORTH CAROLINA PROFESSIONAL SEAL 20234 ENGINEER THOMAS S. SPEIDER

Bateman Civil Survey Company
Engineers ● Surveyors ● Planners
2524 Reliance Avenue, Apex, North Carolina 27539
Phone: 919.577.1080 Fax: 919.577.1081
NCBELS FIRM No. C-2378

CHANDLER'S RIDGE
CONSTRUCTION DOCUMENTS
CONSERVATION SUBDIVISION

410 W. YOUNG ST.
ROLESVILLE, NC
WAKE COUNTY

WEST UTILITY PLAN

Project Engineer:	TSS
Designed By:	TEP
Drawn By:	TEP
Checked By:	TSS
Scale:	1" = 50'
Date:	06/17/2020
Project Number:	P170347

SHEET
C603

P:\2017 Projects\170347 Chandlers Ridge\Eng\CAD\DWG\PSHEETP_170347_C600_UTILITIES.dwg

LEGEND:

- EXISTING POND
- EXISTING WETLANDS
- PROPOSED PHASING LINE
- EXISTING TOWN OF ROLESVILLE ETJ
- EXISTING STREAM
- 50' STREAM AND POND RIPARIAN BUFFER
- DEDICATED PRIMARY PROTECTED OPEN SPACE
- DEDICATED SECONDARY PROTECTED OPEN SPACE
- PROPOSED ASPHALT PAVEMENT
- PROPOSED RIGHT OF WAY
- PROPOSED SETBACK
- PROPOSED EASEMENT
- W — PROPOSED WATER MAIN
- SS — PROPOSED SEWER MAIN
- FM — PROPOSED FORCE MAIN

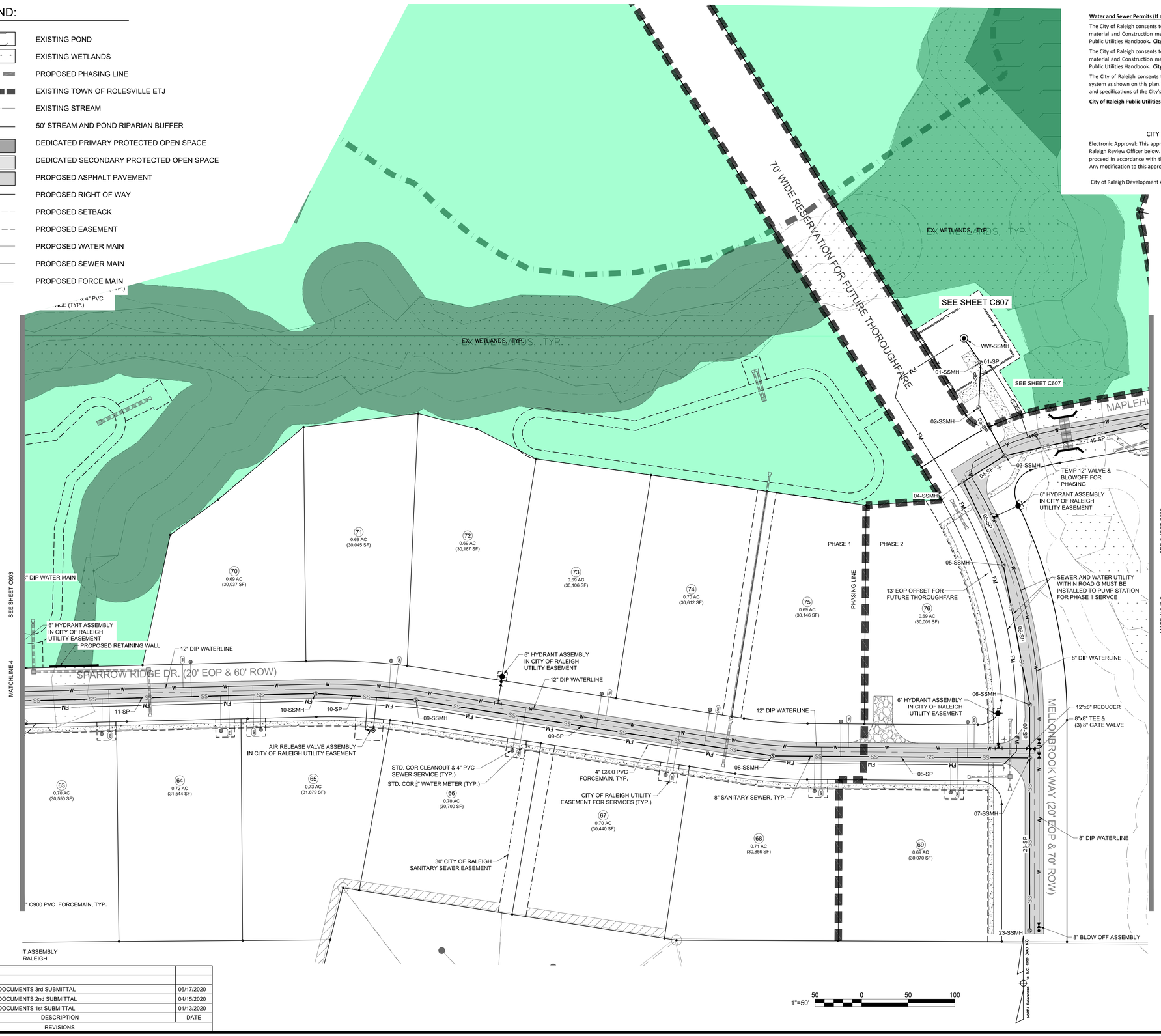

SITE PERMITTING APPROVAL

Water and Sewer Permits (If applicable)

The City of Raleigh consents to the connection and extension of the City's **Public Sewer System** as shown on this plan. The material and Construction methods used for this project shall conform to the standards and specifications of the City's Public Utilities Handbook. **City of Raleigh Public Utilities Department Permit #** _____

The City of Raleigh consents to the connection and extension of the City's **Public Water System** as shown on this plan. The material and Construction methods used for this project shall conform to the standards and specifications of the City's Public Utilities Handbook. **City of Raleigh Public Utilities Department Permit #** _____

The City of Raleigh consents to the connection to its public sewer system and extension of the **private sewer collection** system as shown on this plan. The material and constructions methods used for this project shall conform to the standards and specifications of the City's Public Utilities Handbook.

City of Raleigh Public Utilities Department Permit # _____

CITY OF RALEIGH - PLANS AUTHORIZED FOR CONSTRUCTION

Electronic Approval: This approval is being issued electronically. This approval is valid only upon the signature of a City of Raleigh Review Officer below. The City will retain a copy of the approved plans. Any work authorized by this approval must proceed in accordance with the plans kept on file with the City. This electronic approval may not be edited once issued. Any modification to this approval once issued will invalidate this approval.

City of Raleigh Development Approval _____
Raleigh Water Review Officer

REV	DESCRIPTION	DATE
03	CONSTRUCTION DOCUMENTS 3rd SUBMITTAL	06/17/2020
02	CONSTRUCTION DOCUMENTS 2nd SUBMITTAL	04/15/2020
01	CONSTRUCTION DOCUMENTS 1st SUBMITTAL	01/13/2020

REVISIONS

Bateman Civil Survey Company
Engineers ● Surveyors ● Planners
2524 Reliance Avenue, Apex, North Carolina 27539
Phone: 919.577.1080 Fax: 919.577.1081
NCBELS FIRM No. C-2378

CHANDLER'S RIDGE
CONSTRUCTION DOCUMENTS
CONSERVATION SUBDIVISION
410 W. YOUNG ST.
ROLESVILLE, NC
WAKE COUNTY

EAST UTILITY PLAN

Project Engineer:	TSS
Designed By:	TEP
Drawn By:	TEP
Checked By:	TSS
Scale:	1" = 50'
Date:	06/17/2020
Project Number:	P170347

SHEET
C604

P:\2017 Projects\170347 Chandlers Ridge\Eng\CAD\DWG\TP SHEETS\P_170347_C600_UTILITIES.dwg

LEGEND:

- EXISTING POND
- EXISTING WETLANDS
- PROPOSED PHASING LINE
- EXISTING TOWN OF ROLESVILLE ETJ
- EXISTING STREAM
- 50' STREAM AND POND RIPARIAN BUFFER
- DEDICATED PRIMARY PROTECTED OPEN SPACE
- DEDICATED SECONDARY PROTECTED OPEN SPACE
- PROPOSED ASPHALT PAVEMENT
- PROPOSED RIGHT OF WAY
- PROPOSED SETBACK
- PROPOSED EASEMENT
- W — PROPOSED WATER MAIN
- SS — PROPOSED SEWER MAIN
- FM — PROPOSED FORCE MAIN

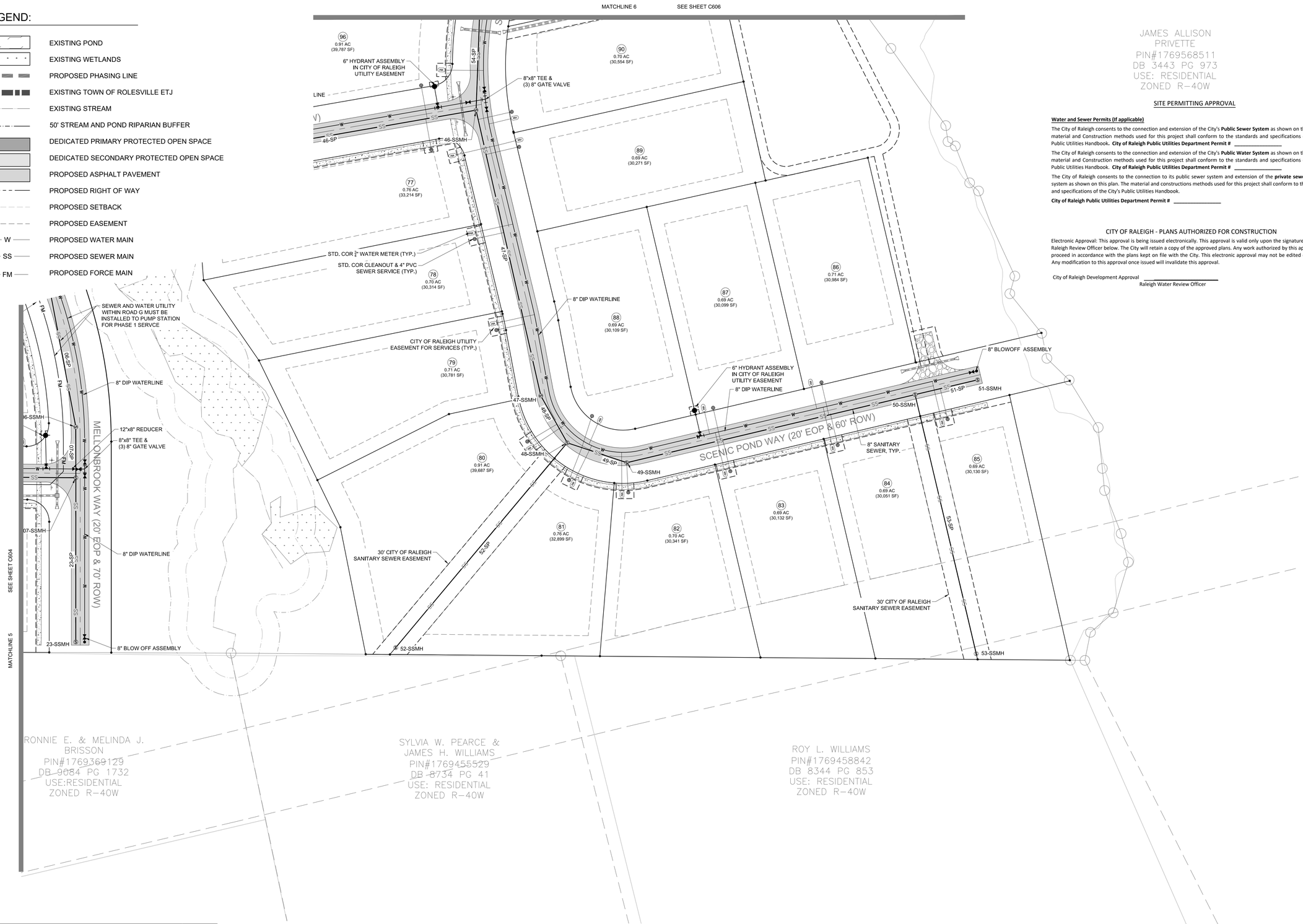

SITE PERMITTING APPROVAL

Water and Sewer Permits (If applicable)

The City of Raleigh consents to the connection and extension of the City's **Public Sewer System** as shown on this plan. The material and Construction methods used for this project shall conform to the standards and specifications of the City's Public Utilities Handbook**. City of Raleigh Public Utilities Department Permit #** _____

The City of Raleigh consents to the connection and extension of the City's **Public Water System** as shown on this plan. The material and Construction methods used for this project shall conform to the standards and specifications of the City's Public Utilities Handbook. **City of Raleigh Public Utilities Department Permit #** _____

The City of Raleigh consents to the connection to its public sewer system and extension of the **private sewer collection** system as shown on this plan. The material and constructions methods used for this project shall conform to the standards and specifications of the City's Public Utilities Handbook.

City of Raleigh Public Utilities Department Permit # _____

CITY OF RALEIGH - PLANS AUTHORIZED FOR CONSTRUCTION

Electronic Approval: This approval is being issued electronically. This approval is valid only upon the signature of a City of Raleigh Review Officer below. The City will retain a copy of the approved plans. Any work authorized by this approval must proceed in accordance with the plans kept on file with the City. This electronic approval may not be edited once issued. Any modification to this approval once issued will invalidate this approval.

City of Raleigh Development Approval _____
Raleigh Water Review Officer

NORTH CAROLINA PROFESSIONAL SEAL 20234 ENGINEER THOMAS S. SPEIDER

Bateman Civil Survey Company
Engineers • Surveyors • Planners
2524 Reliance Avenue, Apex, North Carolina 27539
Phone: 919.577.1080 Fax: 919.577.1081
NCBELS FIRM No. C-2378

CHANDLER'S RIDGE
CONSTRUCTION DOCUMENTS
CONSERVATION SUBDIVISION

410 W. YOUNG ST.
ROLESVILLE, NC
WAKE COUNTY

EAST UTILITY PLAN

Project Engineer:	TSS
Designed By:	TEP
Drawn By:	TEP
Checked By:	TSS
Scale:	1" = 50'
Date:	06/17/2020
Project Number:	P170347

SHEET
C605

REV	DESCRIPTION	DATE
03	CONSTRUCTION DOCUMENTS 3rd SUBMITTAL	06/17/2020
02	CONSTRUCTION DOCUMENTS 2nd SUBMITTAL	04/15/2020
01	CONSTRUCTION DOCUMENTS 1st SUBMITTAL	01/13/2020

REVISIONS

P:\2017 Projects\170347 Chandlers Ridge\Eng\CAD\DWG\TP SHEETTP_170347_C600_UTILITIES.dwg

LEGEND:

- EXISTING POND
- EXISTING WETLANDS
- PROPOSED PHASING LINE
- EXISTING TOWN OF ROLESVILLE ETJ
- EXISTING STREAM
- 50' STREAM AND POND RIPARIAN BUFFER
- DEDICATED PRIMARY PROTECTED OPEN SPACE
- DEDICATED SECONDARY PROTECTED OPEN SPACE
- PROPOSED ASPHALT PAVEMENT
- PROPOSED RIGHT OF WAY
- PROPOSED SETBACK
- PROPOSED EASEMENT
- W — PROPOSED WATER MAIN
- SS — PROPOSED SEWER MAIN
- FM — PROPOSED FORCE MAIN

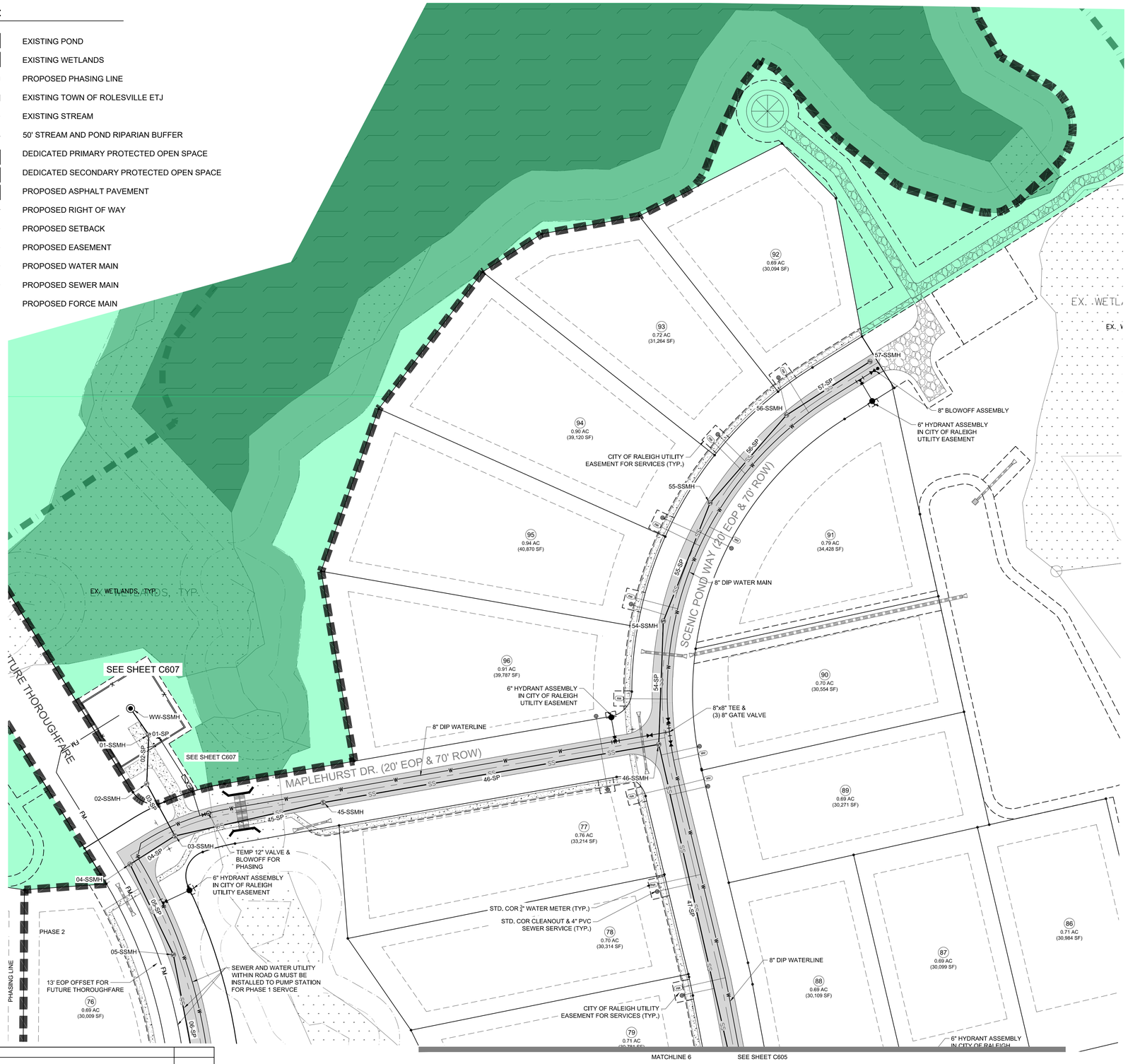

REV	DESCRIPTION	DATE
03	CONSTRUCTION DOCUMENTS 3rd SUBMITTAL	06/17/2020
02	CONSTRUCTION DOCUMENTS 2nd SUBMITTAL	04/15/2020
01	CONSTRUCTION DOCUMENTS 1st SUBMITTAL	01/13/2020

REVISIONS

SITE PERMITTING APPROVAL

Water and Sewer Permits (If applicable)

The City of Raleigh consents to the connection and extension of the City's **Public Sewer System** as shown on this plan. The material and Construction methods used for this project shall conform to the standards and specifications of the City's Public Utilities Handbook. **City of Raleigh Public Utilities Department Permit #** _____

The City of Raleigh consents to the connection and extension of the City's **Public Water System** as shown on this plan. The material and Construction methods used for this project shall conform to the standards and specifications of the City's Public Utilities Handbook. **City of Raleigh Public Utilities Department Permit #** _____

The City of Raleigh consents to the connection to its public sewer system and extension of the **private sewer collection** system as shown on this plan. The material and constructions methods used for this project shall conform to the standards and specifications of the City's Public Utilities Handbook.

City of Raleigh Public Utilities Department Permit # _____

CITY OF RALEIGH - PLANS AUTHORIZED FOR CONSTRUCTION

Electronic Approval: This approval is being issued electronically. This approval is valid only upon the signature of a City of Raleigh Review Officer below. The City will retain a copy of the approved plans. Any work authorized by this approval must proceed in accordance with the plans kept on file with the City. This electronic approval may not be edited once issued. Any modification to this approval once issued will invalidate this approval.

City of Raleigh Development Approval _____
Raleigh Water Review Officer

NORTH CAROLINA PROFESSIONAL SEAL 20234 ENGINEER THOMAS S. SPENCER

Bateman Civil Survey Company
Engineers • Surveyors • Planners
2524 Reliance Avenue, Apex, North Carolina 27539
Phone: 919.577.1080 Fax: 919.577.1081
NCBELS FIRM No. C-2378

CHANDLER'S RIDGE
CONSTRUCTION DOCUMENTS
CONSERVATION SUBDIVISION

410 W. YOUNG ST.
ROLESVILLE, NC
WAKE COUNTY

EAST UTILITY PLAN

Project Engineer:	TSS
Designed By:	TEP
Drawn By:	TEP
Checked By:	TSS
Scale:	1" = 50'
Date:	06/17/2020
Project Number:	P170347

SHEET
C606

1"=50' 50 0 50 100

NORTH Referenced to N.C. GRID (NAD 83)

P:\2017 Projects\170347 Chandlers Ridge\Eng\CADD\DWG\TP SHEET\P_170347_C600_UTILITIES.dwg

LEGEND:

- EXISTING POND
- EXISTING WETLANDS
- PROPOSED PHASING LINE
- EXISTING TOWN OF ROLESVILLE ETJ
- EXISTING STREAM
- 50' STREAM AND POND RIPARIAN BUFFER
- PROPOSED RIGHT OF WAY
- PROPOSED SETBACK
- PROPOSED EASEMENT
- W — PROPOSED WATER MAIN
- SS — PROPOSED SEWER MAIN
- FM — PROPOSED FORCE MAIN

LIFT STATION NOTES

1. CONCRETE SHALL BE 4,000PSI COMPRESSION STRENGTH.
2. MANHOLE SHALL MEET REQUIREMENTS OF ASTM C-478.
3. ALL ELECTRICAL MATERIAL AND INSTALLATION SHALL BE BY A LICENSED ELECTRICIAN AND IN ACCORDANCE WITH THE NATIONAL ELECTRICAL CODE, AND RULES AND REGULATIONS OF LOCAL AUTHORITIES HAVING JURISDICTION. MATERIALS SHALL BE LISTED OR LABELED BY THE UNDERWRITERS LABORATORIES STANDARDS. ALL WIRE TO BE COMPLETED PER COR SPECIFICATIONS.
4. LIFT STATION MANHOLE CONCRETE SLAB AND HATCH SHALL BE MANUFACTURED TO WITHSTAND H-20 LOADING CONDITIONS.
5. MANUFACTURER SHALL BE REQUIRED TO SUBMIT DESIGN CALCULATIONS SIGNED AND SEALED BY A PROFESSIONAL ENGINEER WITH SHOP DRAWINGS AND REVIEW SUBMITTAL.
6. SHOP DRAWINGS AND WIRING DIAGRAMS SHALL BE PROVIDED FOR ALL ELECTRICAL EQUIPMENT. ALL WIRING PER COR STANDARDS.
7. ENGINEER TO APPROVE FOUNDATION BED BEFORE SETTING MANHOLES. FOUNDATION SHALL BE 9'-0" DIA. AND 12" DEPTH NO. 57 STONE BEDDING.
8. CONTRACTOR IS TO PROVIDE DE-WATERING EQUIPMENT AS REQUIRED FOR CONSTRUCTION AT NO ADDITIONAL COST TO THE OWNER.
9. HATCH DOORS AND CONTROL PANEL BOX SHALL BE LOCKABLE AND KEYED TO CORPUD MASTER LOCK SYSTEM. CONTRACTOR SHALL FURNISH 3 LOCKS AND KEYS.
10. CONTRACTOR SHALL INSTALL ALL OWNER FURNISHED EQUIPMENT AND PROVIDE START UP SERVICE (MINIMUM 2 DAYS).
11. CONTRACTOR SHALL FURNISH AND INSTALL ALL EQUIPMENT, MATERIALS, AND INCIDENTALS REQUIRED TO MAKE THE LIFT STATION FULLY OPERATIONAL AND IN ACCORDANCE WITH CORPUD STANDARDS.
12. RECESSED LIFTING HOOKS SHALL BE PLACED IN CONCRETE WET WELL COVER. CONTROL PANEL BOX SHALL BE ANCHORED IN 12"x24" DEEP CONCRETE FOOTING.
13. CONTRACTOR SHALL PROVIDE ALL NECESSARY LUBRICANTS FOR STARTUP AND SHALL ASSIST THE EQUIPMENT MANUFACTURER AND OWNER WITH INITIAL STARTUP (MINIMUM 2 DAYS).
14. PIPEWORK SHALL BE ASSEMBLED, INSTALLED, AND FULLY SUPPORTED SO AS NOT TO PUT A STRAIN ON THE PUMPING EQUIPMENT, PIPE FITTINGS AND ELBOWS.
15. ALL THRU-THE-WALL SLEEVES AND CARRIER PIPES INTO THE WET WELL SHALL BE INSTALLED ABSOLUTELY WATERTIGHT WITH NO SIGNS OF SEEPAGE OR INFILTRATION.
16. ENTIRE SITE SHALL BE FENCED FOR SECURITY. CONTRACTOR SHALL PROVIDE LOCKS FOR GATE OPENING.
17. ALL HANGERS, CLAMPS, FLANGE BOLTS, AND CONNECTIONS SHALL BE STAINLESS STEEL UNLESS OTHERWISE SPECIFIED. THESE ITEMS TO BE FURNISHED AND INSTALLED BY THE CONTRACTOR.
18. ALL DIMENSIONS SHALL BE VERIFIED BY CONTRACTOR AND SHALL BE ADJUSTED TO ACCOMMODATE DIMENSIONS OF MATERIALS SUPPLIED BY CONTRACTOR AND OWNER.
19. FLANGE FACES SHALL BE SERRATED.

ALL WET WELLS SHALL BE INTERNALLY FACTORY LINED WITH A POLYUREA/POLYURETHANE COATING. DURAMER 1030 SHALL BE APPLIED IN ONE COAT OF A 20% SOLIDS, DEEPLY PENETRATING, DUAL-COMPONENT POLYUREA PRIMER (.5-1.0 MILS DRY FILM THICKNESS, 150 FT 2/GAL), ONE INTERMEDIATE COAT OF A DUAL COMPONENT POLYUREA (50-100 MILS DRY FILM THICKNESS, 50 FT 2/GAL) AND ONE TOP COAT OF A 65% SOLIDS, TWO-PART POLYUREA (7.5-10 MILS DRY FILM THICKNESS, 125 FT 2/GAL). ALL COATS SHALL BE APPLIED BY BRUSH, SPRAY, OR ROLLER. SHERFLEX ELASTOMERIC POLYURETHANE SHALL BE APPLIED ACCORDING TO MANUFACTURER'S RECOMMENDATIONS. POLYUREA/POLYURETHANE COATINGS SHALL BE DURAMER 1030 AS MANUFACTURED BY SEWERKOTE, SHERFLEX ELASTOMERIC POLYURETHANE AS MANUFACTURED BY SHERWIN-WILLIAMS, OR APPROVED EQUAL.

20. ALL MATERIALS AND INSTALLATION SHALL BE IN ACCORDANCE WITH CITY OF RALEIGH STANDARDS.
22. ALL DUCTILE IRON PIPE SHALL HAVE AN INTERIOR LINING OF CERAMIC EPOXY (PROTECTO 401) OR APPROVED EQUAL.
24. ALL BELOW GRADE FITTINGS SHALL BE MECHANICAL JOINT WITH RETAINING GLAND JOINT RESTRAINT (IE: MEGA-LUGS).
25. ALL CONSTRUCTION TO CONFIRM WITH COR SPECIFICATIONS.

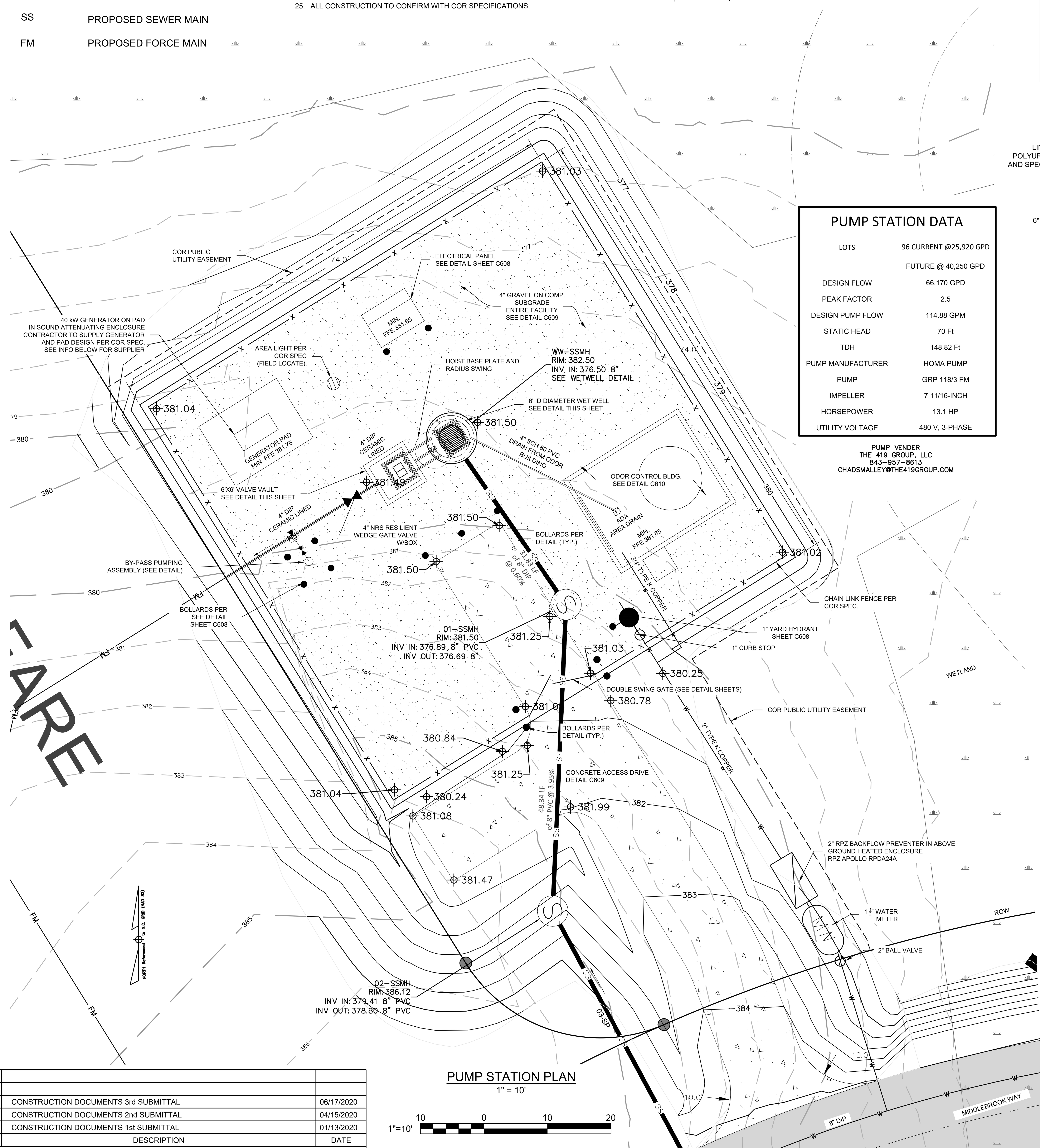

PUMP STATION PLAN

1" = 10'

1"=10' 10 0 10 20

PUMP STATION DATA

LOTS	96 CURRENT @25,920 GPD
	FUTURE @ 40,250 GPD
DESIGN FLOW	66,170 GPD
PEAK FACTOR	2.5
DESIGN PUMP FLOW	114.88 GPM
STATIC HEAD	70 Ft
TDH	148.82 Ft
PUMP MANUFACTURER	HOMA PUMP
PUMP	GRP 118/3 FM
IMPELLER	7 11/16-INCH
HORSEPOWER	13.1 HP
UTILITY VOLTAGE	480 V, 3-PHASE

PUMP VENDER
THE 419 GROUP, LLC
843–957–8613
CHADSMALLEY@THE419GROUP.COM

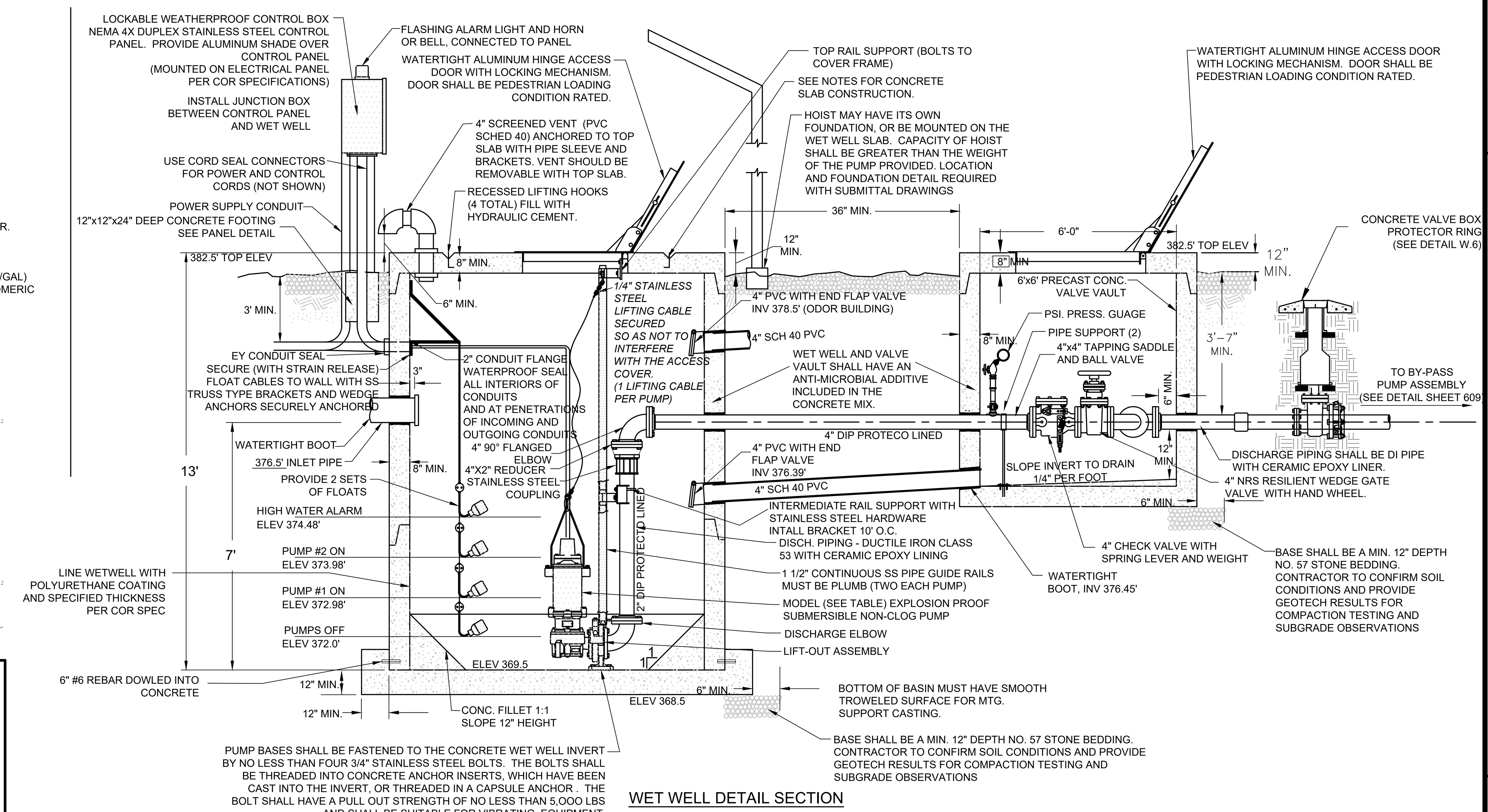

WET WELL DETAIL SECTION

N.T.S.

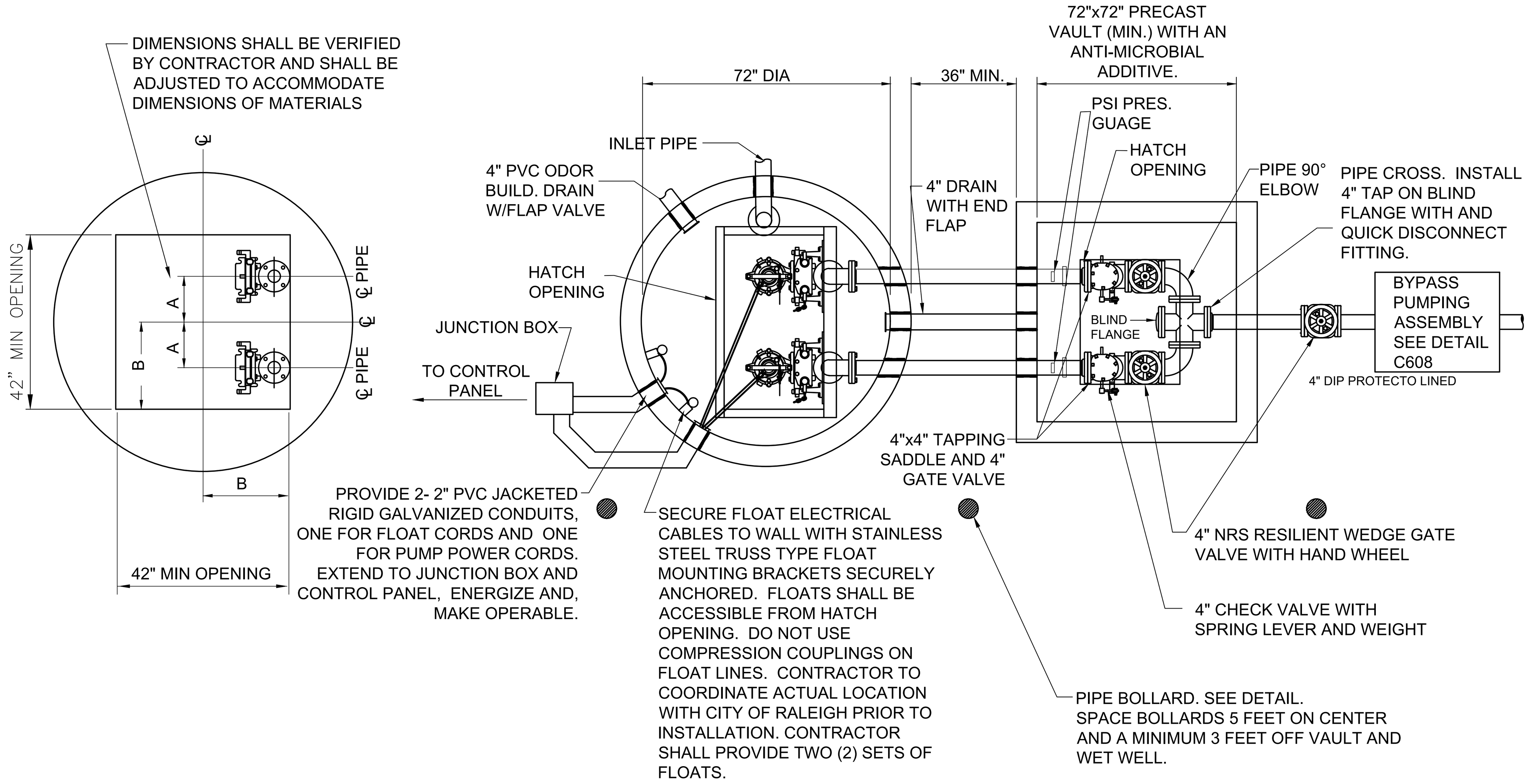

CONTRACTOR SHALL SUBMIT ALL SHOP DRAWINGS TO THE ENGINEER FOR APPROVAL

ATTENTION CONTRACTORS

The ***Construction Contractor*** responsible for the extension of water, sewer, and/or reuse, as approved in these plans, is responsible for ***contacting*** the ***Public Utilities Department*** at ***(919) 996-4540*** at least ***twenty four hours*** prior to beginning any of their construction.

Failure to notify both ***City Departments*** in advance of beginning construction, will result in the issuance of ***monetary fines***, and require reinstallation of any water or sewer facilities not inspected as a result of this notification failure.

Failure to call for ***Inspection***, ***Install a Downstream Plug***, have ***Permitted Plans*** on the ***Jobsite***, or any other ***Violation*** of ***City of Raleigh Standards*** will result in a ***Fine and Possible Exclusion*** from future work in the ***City of Raleigh***.

SITE PERMITTING APPROVAL

Water and Sewer Permits (If applicable)

The City of Raleigh consents to the connection and extension of the City's **Public Sewer System** as shown on this plan. The material and Construction methods used for this project shall conform to the standards and specifications of the City's Public Utilities Handbook**. City of Raleigh Public Utilities Department Permit #** ________________

The City of Raleigh consents to the connection and extension of the City's **Public Water System** as shown on this plan. The material and Construction methods used for this project shall conform to the standards and specifications of the City's Public Utilities Handbook. **City of Raleigh Public Utilities Department Permit #** ________________

The City of Raleigh consents to the connection to its public sewer system and extension of the **private sewer collection** system as shown on this plan. The material and constructions methods used for this project shall conform to the standards and specifications of the City's Public Utilities Handbook.

City of Raleigh Public Utilities Department Permit # ________________

CITY OF RALEIGH - PLANS AUTHORIZED FOR CONSTRUCTION

Electronic Approval: This approval is being issued electronically. This approval is valid only upon the signature of a City of Raleigh Review Officer below. The City will retain a copy of the approved plans. Any work authorized by this approval must proceed in accordance with the plans kept on file with the City. This electronic approval may not be edited once issued. Any modification to this approval once issued will invalidate this approval.

City of Raleigh Development Approval ______________________________

Raleigh Water Review Officer

REVISIONS

REV	DESCRIPTION	DATE
03	CONSTRUCTION DOCUMENTS 3rd SUBMITTAL	06/17/2020
02	CONSTRUCTION DOCUMENTS 2nd SUBMITTAL	04/15/2020
01	CONSTRUCTION DOCUMENTS 1st SUBMITTAL	01/13/2020

NORTH CAROLINA PROFESSIONAL SEAL 20234 ENGINEER THOMAS S. SPEIGHT, JR. 6/17/2020

Bateman Civil Survey Company
Engineers • Surveyors • Planners
2524 Reliance Avenue, Apex, North Carolina 27539
Phone: 919.577.1080 Fax: 919.577.1081
NCBELS FIRM No. C-2378

CHANDLER'S RIDGE
CONSTRUCTION DOCUMENTS
CONSERVATION SUBDIVISION

410 W. YOUNG ST.
ROLESVILLE, NC
WAKE COUNTY

PUMP STATION PLAN AND DETAILS

Project Engineer:	TSS
Designed By:	TEP
Drawn By:	TEP
Checked By:	TSS
Scale:	
Date:	06/17/2020
Project Number:	P170347

SHEET

C607

P:\2017 Projects\170347 Chandlers Ridge\Eng\CAD\DWG\TP SHEET\P_170347_C607_PUMP_STATION.dwg

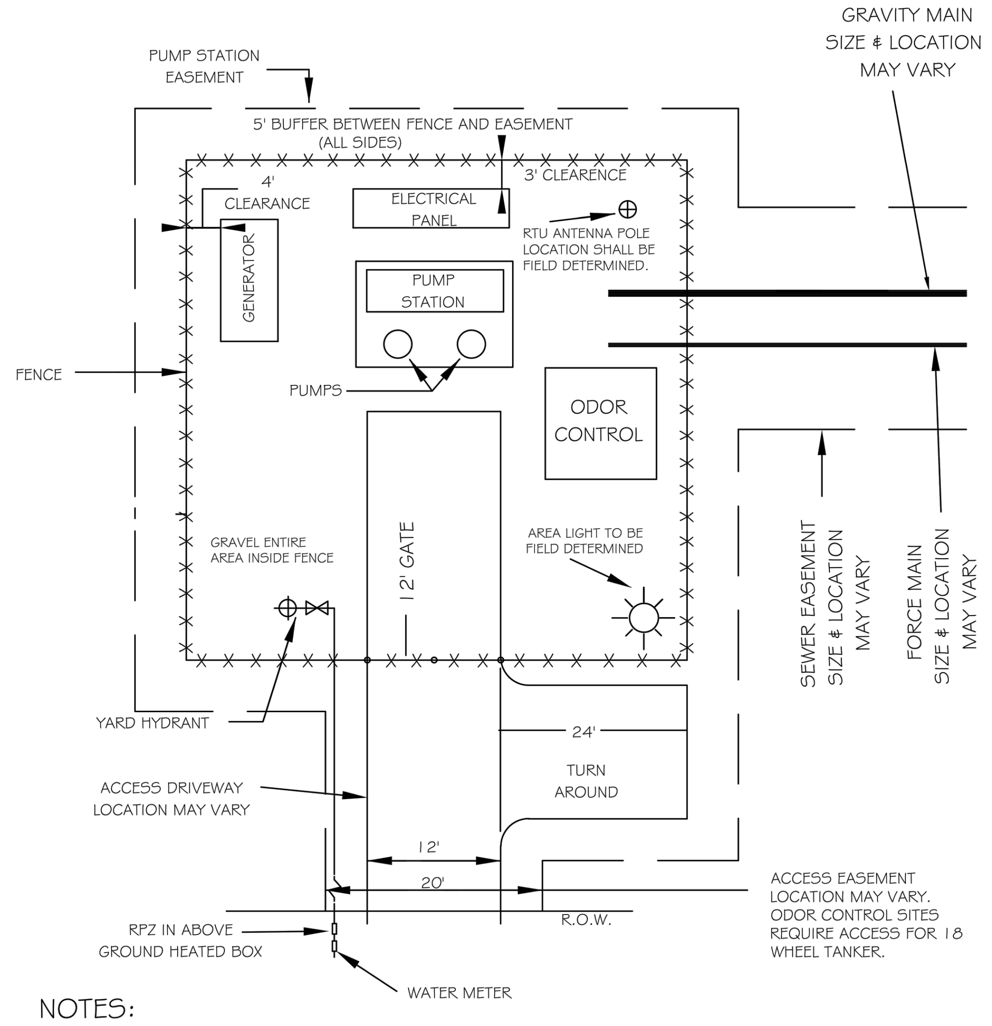

NOTES:

1. PUMP STATION MUST MEET ALL ZONING SET-BACK REQUIREMENTS
2. PUMP STATION MUST MEET ALL LANDSCAPING REQUIREMENTS
3. WATER SRVICE FOR YARD HYDRANT MUST HAVE RPZ BACKFLOW PROTECTION. SIZE OF SRVICE MAY VARY
4. PUMP STATION EASEMENT TO BE 60'x 60' MINIMUM
5. EQUIPMENT LOCATIONS MAY VARY
6. 5' BUFFER SHALL BE REQUIRED BETWEEN FENCE AND EASEMENT LINE.

* FOR ELECTRICAL PANEL REFER TO DETAILS S-36 & S-37

CITY OF RALEIGH
DEPARTMENT OF PUBLIC UTILITIES
MINIMUM REQUIREMENTS FOR PUMP STATIONS

DWG. NO.	REVISIONS	DATE	REVISIONS	DATE
S-35	D.W.C.	10-1-99	A.B.B.	2-16-05
	RRH	3-30-00		

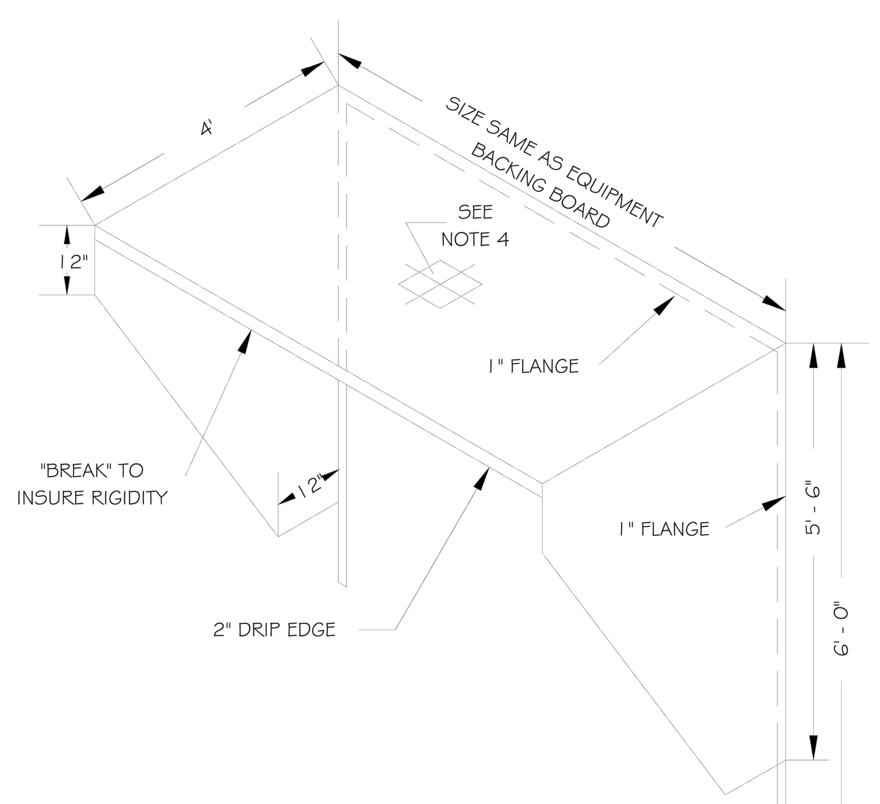

NOTES:

1. HOOD TO 12 Ga. MILL FINISH ALUMINIUM 2.
HOOD TO BE HELIARC "STITCH" WELDED TO 1/4" ALUMINIUM PLATE EQUIPMENT BACKING BOARD
3. HOOD SHALL BE SAME WIDTH AS ALUMINIUM PLATE EQUIPMENT BACKING BOARD
4. PROVIDE MOUNTING TABS FOR WORK LIGHT BOX

CITY OF RALEIGH
DEPARTMENT OF PUBLIC UTILITIES
WEATHER HOOD FOR ELECTRICAL EQUIPMENT PANEL

DWG. NO.	REVISIONS	DATE	REVISIONS	DATE
S-37	D.W.C.	10-7-99	LBN	9-30-04
	RRH	3-31-00		

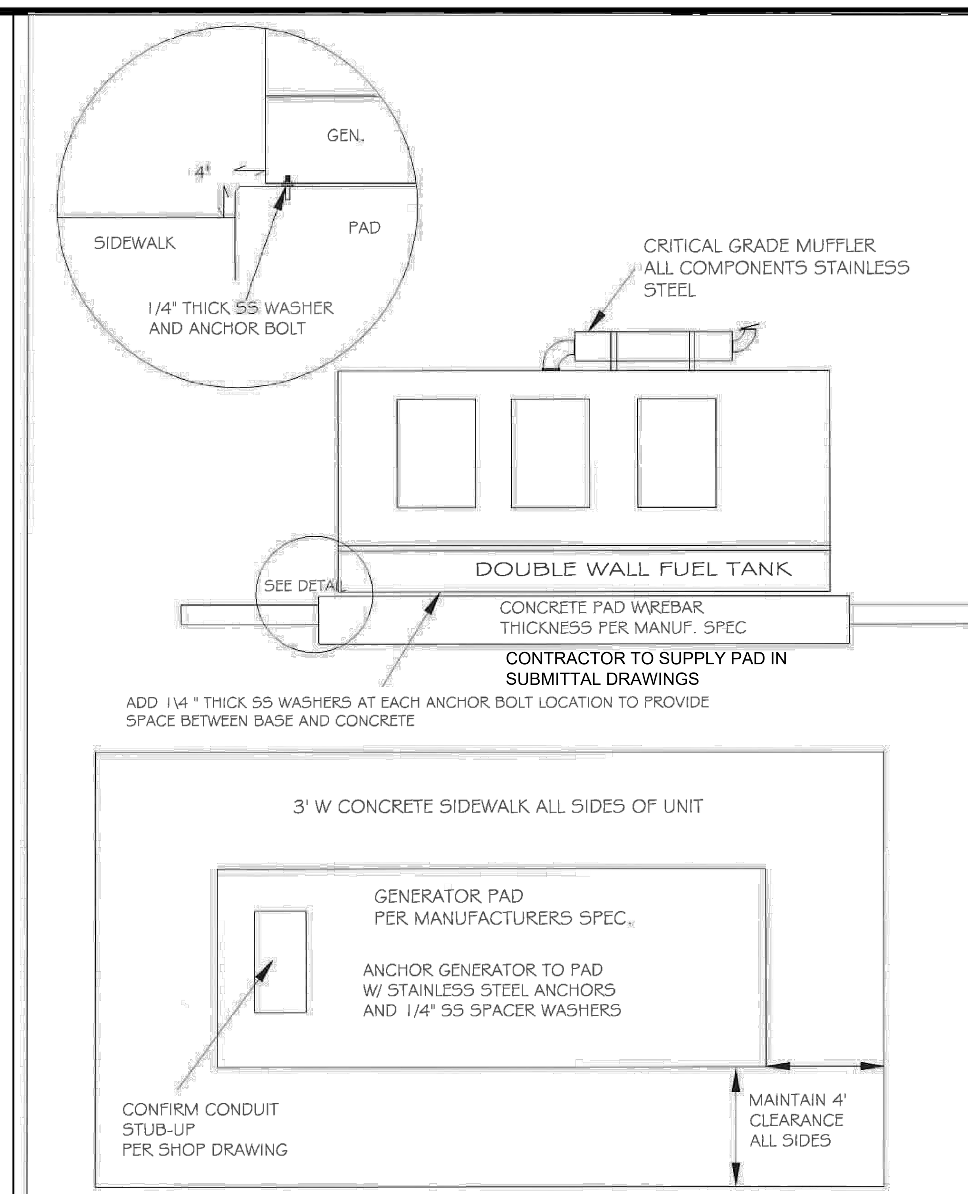

CITY OF RALEIGH
DEPARTMENT OF PUBLIC UTILITIES
GENERATOR PAD

DWG. NO.	REVISIONS	DATE	REVISIONS	DATE
S-48	L.B.N.	11-19-04		

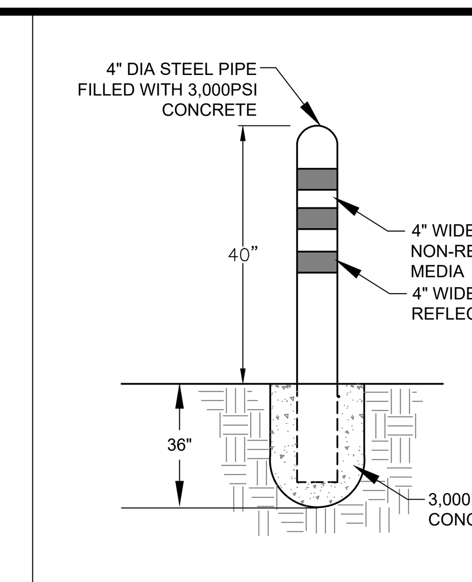

CONCRETE BOLLARD DETAIL

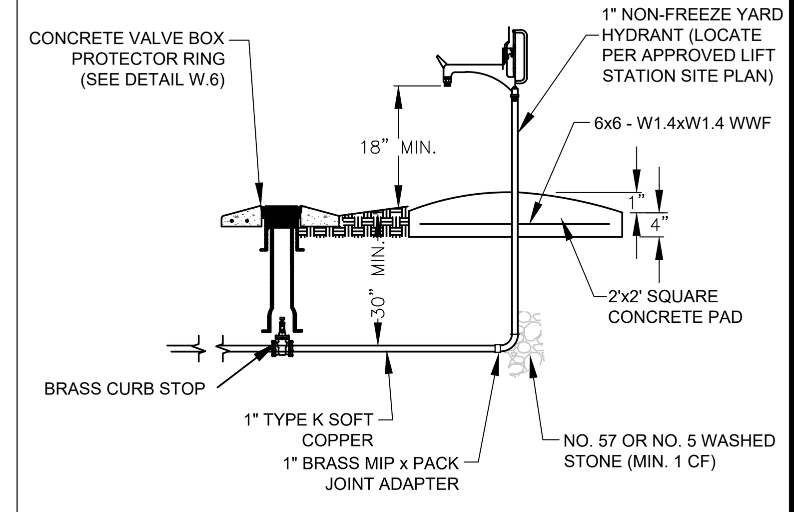

YARD HYDRANT INSTALLATION

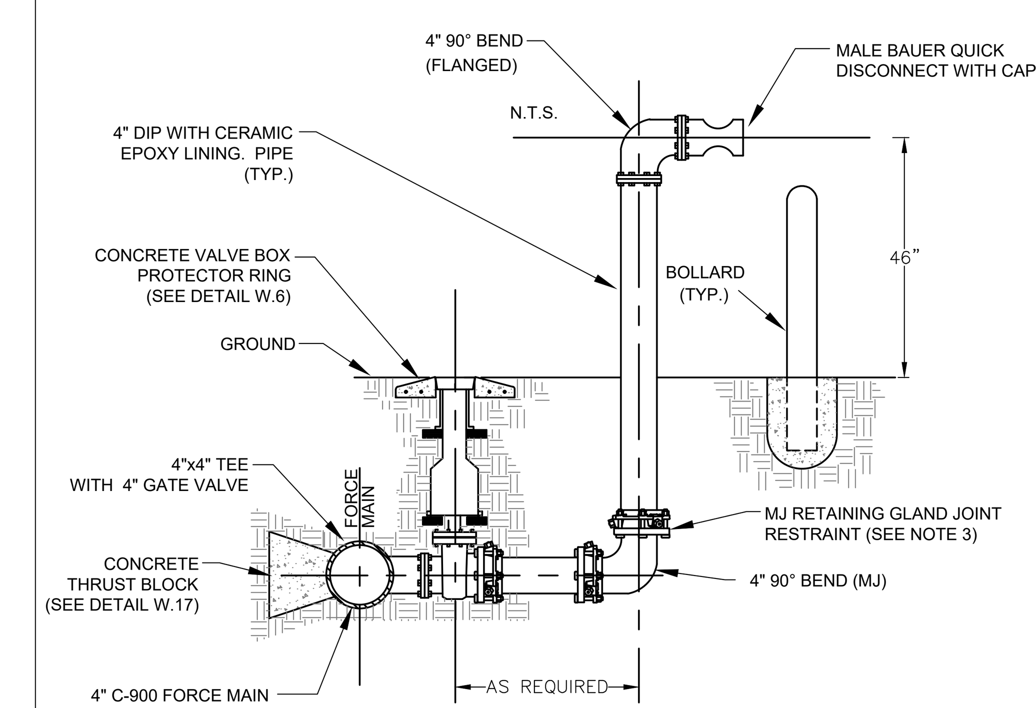

FORCE MAIN BY-PASS PUMPING ASSEMBLY

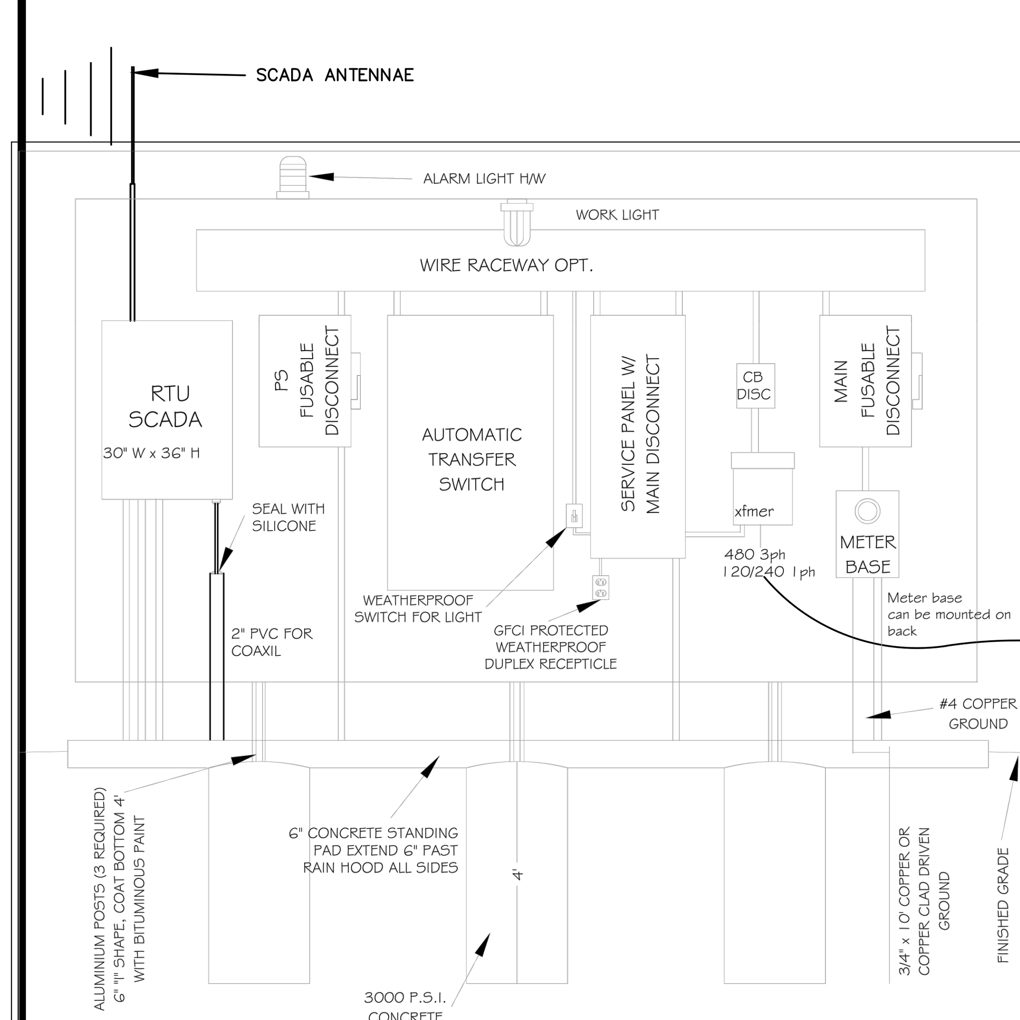

CONTRACTOR SHALL VERIFY COMPLIANCE WITH ALL ELECTRICAL COMPONENTS

NOTES

1. BACKING PLATE TO BE 1/4" ALUMINUM. MOUNT TO "I" BEAM POSTS WITH STAINLESS STEEL NUT, BOLTS, AND WASHERS.
2. ALL ELECTRICAL WORK SHALL CONFORM TO LATEST NATIONAL, STATE AND LOCAL CODES AND REQUIREMENTS.
3. SHOW CONDUIT SIZE AND RUNS WITH WIRE SIZE AND NUMBER ON PUMP STATION PLANS.
4. PANEL LAYOUT IS SCHEMATIC ONLY. ADJUST AS NEEDED TO ACCOMMODATE EQUIPMENT. MAINTAIN 4" MIN. CLEARANCE BETWEEN PANELS AND SIDE SHIELDS.
5. ALL ENCLOSURES SHALL BE NEMA 4X RATED AND LOCKABLE.
6. ENCLOSURES SHALL BE MOUNTED TO ALUMINUM BACKING PLATE WITH NYLON SPACERS & STAINLESS STEEL NUTS, BOLTS & WASHERS.
7. CONDUIT SHALL BE RIDGID ALUMINUM OR GALVANIZED. MEYERS HUBS SHALL BE USED AT ALL PANEL CONNECTIONS.
8. NO EQUIPMENT SHALL BE MOUNTED LESS THAN 36" ABOVE FINISHED GRADE. MIN. CLEARANCE FROM WORK LIGHT TO STANDING PAD SHALL BE 6' 6".

* FOR WEATHER HOOD REFER TO DETAIL S-37

CITY OF RALEIGH
DEPARTMENT OF PUBLIC UTILITIES
PUMP STATION ELECTRICAL PANEL

DWG. NO.	REVISIONS	DATE	REVISIONS	DATE
S-36	D.W.C.	10-7-99	LBN	10-19-04
	RRH	3-30-00		

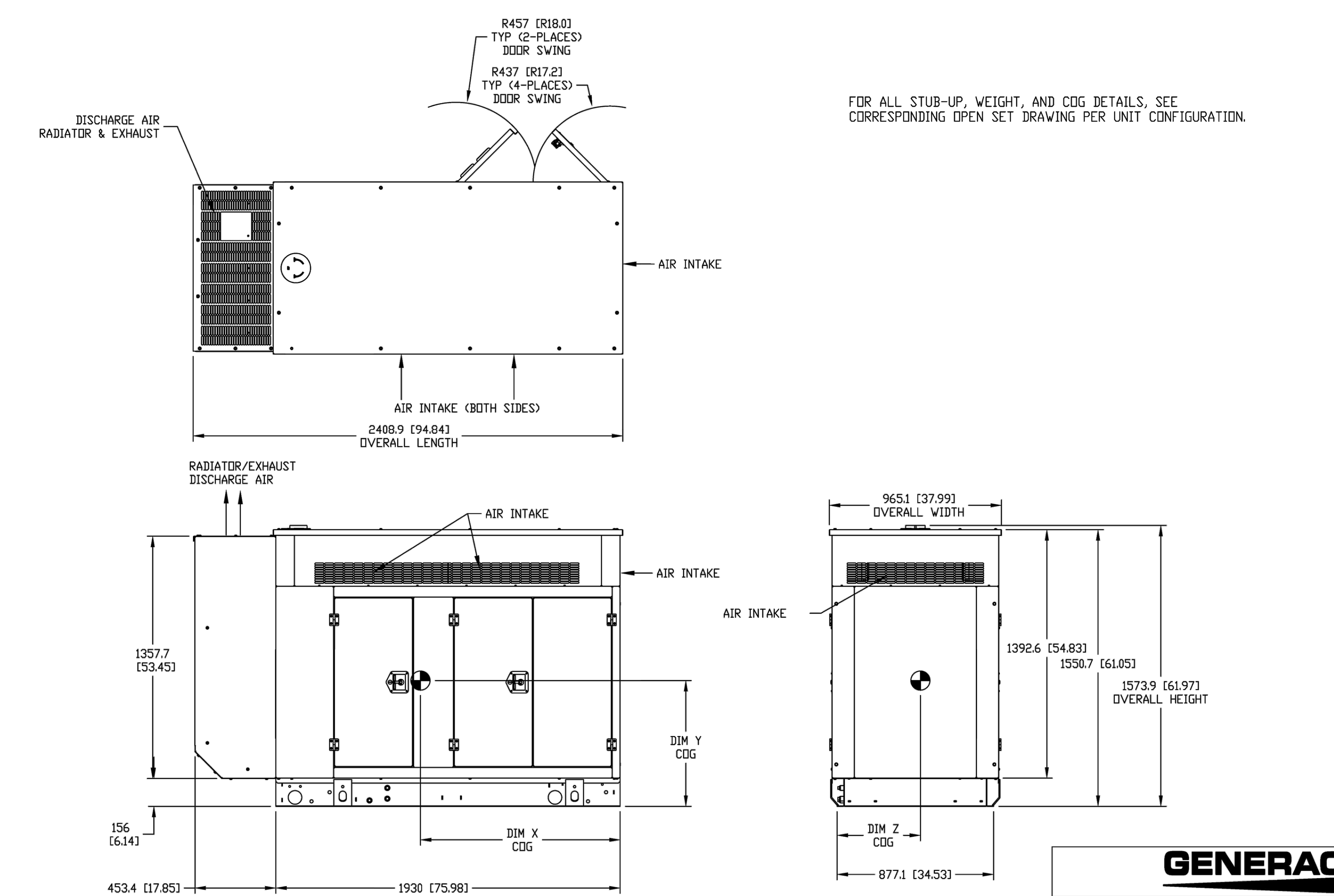

FOR ALL STUB-UP, WEIGHT, AND COG DETAILS, SEE CORRESPONDING OPEN SET DRAWING PER UNIT CONFIGURATION.

DIMENSIONS ARE IN MILLIMETERS [INCHES]

DRAWING CREATED FROM PRO/ENGINEER 3D FILE. ECO MODIFICATION TO BE APPLIED TO SOLID MODEL ONLY.

INSTALLATION DRAWING

GENERAC POWER SYSTEMS OWNS THE COPYRIGHT OF THIS DRAWING WHICH IS SUPPLIED IN CONFIDENCE AND MUST NOT BE USED FOR ANY PURPOSE OTHER THAN FOR WHICH IT IS SUPPLIED WITHOUT THE EXPRESS WRITTEN CONSENT OF GENERAC POWER SYSTEMS. © GENERAC POWER SYSTEMS 2013

ELECTRONICALLY APPROVED INSIDE WINDCHILL

GENERAC

TITLE: L2A ENCLOSURE D4.5L 60HZ: SD035, PD032 SD040, PD036, SD050, PD045

ISSUE DATE: 6/6/14

SIZE	CAGE NO	DWG NO	REV
B	N/A	0J4311C	D
SCALE 0.036	WT-KG	SHEET 1 of 1	

GENERATOR SUMMARY:
40 kW RATING, WIRED FOR 277 / 480 VAC THREE PHASE, 60 Hz
PERMANENT MAGNET EXCITATION

SEE SUPPLIER FOR INSTALL AND ORDER:
JOHN DIXON
9197415149
JOHN.DIXON@NATPOW.COM

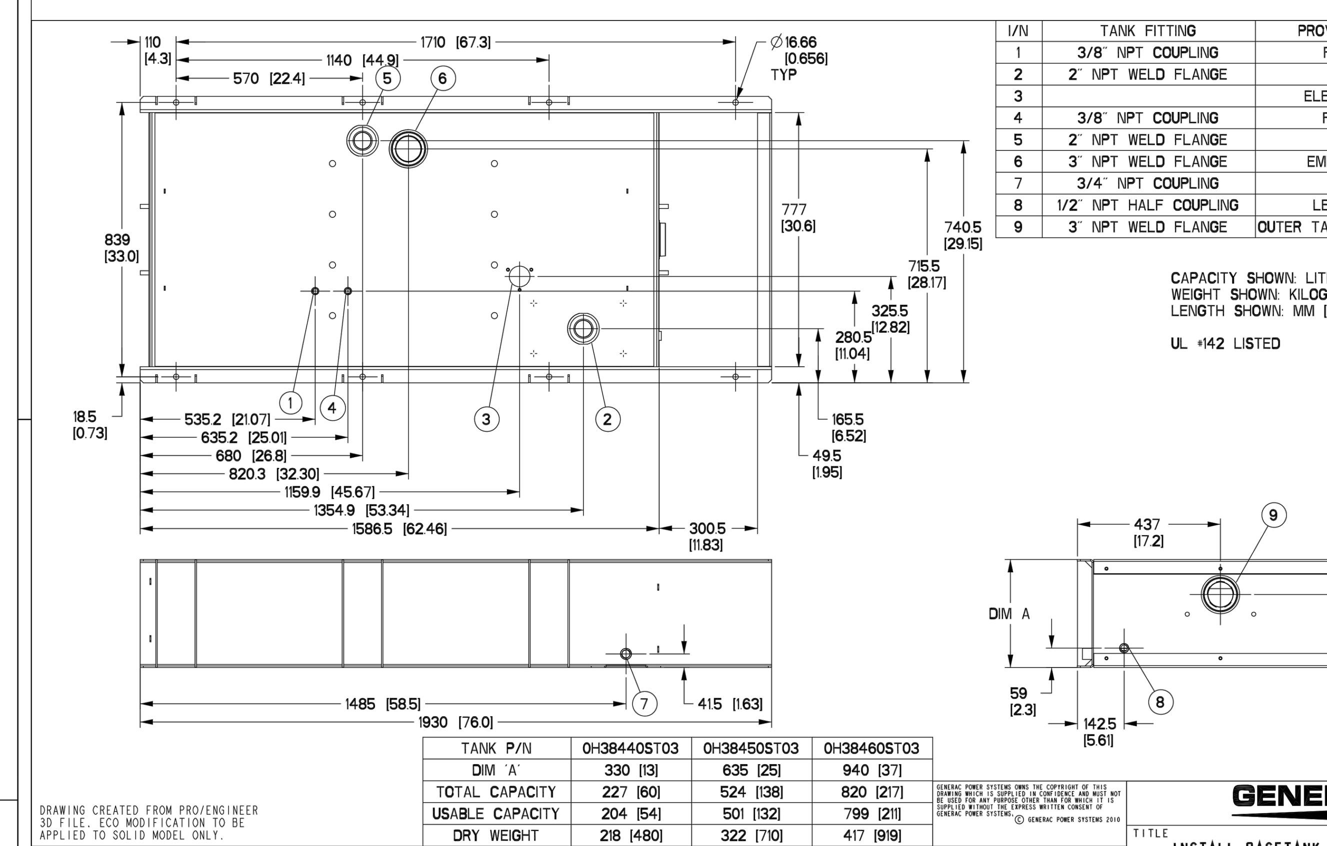

I/N	TANK FITTING	PROVIDING FUNCTION
1	3/8" NPT COUPLING	FUEL SUPPLY
2	2" NPT WELD FLANGE	FUEL FILL
3		ELEC. FUEL LEVEL
4	3/8" NPT COUPLING	FUEL RETURN
5	2" NPT WELD FLANGE	VENT
6	3" NPT WELD FLANGE	EMERGENCY VENT
7	3/4" NPT COUPLING	DRAIN
8	1/2" NPT HALF COUPLING	LEAK DETECTOR
9	3" NPT WELD FLANGE	OUTER TANK EMERGENCY VENT

CAPACITY SHOWN: LITER [GALLONS]
WEIGHT SHOWN: KILOGRAMS [POUNDS]
LENGTH SHOWN: MM [INCH]

UL #142 LISTED

TANK P/N	0H38440ST03	0H38450ST03	0H38460ST03
DIM 'A'	330 [13]	635 [25]	940 [37]
TOTAL CAPACITY	227 [60]	524 [138]	820 [217]
USABLE CAPACITY	204 [54]	501 [132]	799 [211]
DRY WEIGHT	218 [480]	322 [710]	417 [919]

DRAWING CREATED FROM PRO/ENGINEER 3D FILE. ECO MODIFICATION TO BE APPLIED TO SOLID MODEL ONLY.

INSTALLATION DRAWING

GENERAC POWER SYSTEMS OWNS THE COPYRIGHT OF THIS DRAWING WHICH IS SUPPLIED IN CONFIDENCE AND MUST NOT BE USED FOR ANY PURPOSE OTHER THAN FOR WHICH IT IS SUPPLIED WITHOUT THE EXPRESS WRITTEN CONSENT OF GENERAC POWER SYSTEMS. © GENERAC POWER SYSTEMS 2010

GENERAC

TITLE: INSTALL BASETANK A-GRP D4.5L

ISSUE DATE:

SIZE	CAGE NO	DWG NO	REV
B	N/A	0J4499	I
SCALE 0.090	WT-KG 0.00	SHEET 1 of 1	

SCADA

CONTACT:
Cesar Hernandez
Project Manager
CITI, LLC
600 Pinner Weald Way. Ste-102
Cary, NC 27513
M 704.779.8991
P 704.969.2484 ext.1305
cesar@citi-llc.com

SCADA TOWER NOTES:

1. DESIGN ENGINEER SHALL COORDINATE WITH CORPUD TO CONDUCT A RADIO SURVEY OF THE PROPOSED LIFT STATION SITE.
2. THE TOWER HEIGHT SHALL BE AS REQUIRED, BASED ON THE RADIO SURVEY.
3. DESIGN ENGINEER SHALL PROVIDE A SITE SPECIFIC DESIGN FOR THE SCADA TOWER AND ITS FOUNDATION.
4. DESIGN ENGINEER SHALL COORDINATE WITH THE APPLICABLE INSPECTION OFFICE REGARDING THE HEIGHT AND DESIGN OF THE SCADA TOWER.

ATTENTION CONTRACTORS

The ***Construction Contractor*** responsible for the extension of water, sewer, and/or reuse, as approved in these plans, is responsible for ***contacting*** the ***Public Utilities Department*** at ***(919) 996-4540*** at least ***twenty four hours*** prior to beginning any of their construction.

Failure to notify both ***City Departments*** in advance of beginning construction, will result in the issuance of ***monetary fines***, and require reinstallation of any water or sewer facilities not inspected as a result of this notification failure.

Failure to call for ***Inspection***, ***Install a Downstream Plug***, have ***Permitted Plans*** on the ***Jobsite***, or any other ***Violation*** of ***City of Raleigh Standards*** will result in a ***Fine and Possible Exclusion*** from future work in the ***City of Raleigh***.

SITE PERMITTING APPROVAL

Water and Sewer Permits (If applicable)

The City of Raleigh consents to the connection and extension of the City's **Public Sewer System** as shown on this plan. The material and Construction methods used for this project shall conform to the standards and specifications of the City's Public Utilities Handbook. **City of Raleigh Public Utilities Department Permit # ________________**

The City of Raleigh consents to the connection and extension of the City's **Public Water System** as shown on this plan. The material and Construction methods used for this project shall conform to the standards and specifications of the City's Public Utilities Handbook. **City of Raleigh Public Utilities Department Permit # ________________**

The City of Raleigh consents to the connection to its public sewer system and extension of the **private sewer collection** system as shown on this plan. The material and constructions methods used for this project shall conform to the standards and specifications of the City's Public Utilities Handbook.

City of Raleigh Public Utilities Department Permit # ________________

CITY OF RALEIGH - PLANS AUTHORIZED FOR CONSTRUCTION

Electronic Approval: This approval is being issued electronically. This approval is valid only upon the signature of a City of Raleigh Review Officer below. The City will retain a copy of the approved plans. Any work authorized by this approval must proceed in accordance with the plans kept on file with the City. This electronic approval may not be edited once issued. Any modification to this approval once issued will invalidate this approval.

City of Raleigh Development Approval ________________________________

Raleigh Water Review Officer

REV	DESCRIPTION	DATE
03	CONSTRUCTION DOCUMENTS 3rd SUBMITTAL	06/17/2020
02	CONSTRUCTION DOCUMENTS 2nd SUBMITTAL	04/15/2020
01	CONSTRUCTION DOCUMENTS 1st SUBMITTAL	01/13/2020

REVISIONS

P:\2017 Projects\170347 Chandlers Ridge\Eng\CAD\DWG\TP SHEET\TP_170347_C607_PUMP_STATION.dwg

NORTH CAROLINA PROFESSIONAL SEAL 20234 ENGINEER THOMAS S. SPEIGHT, JR. 6/17/2020

Bateman Civil Survey Company
Engineers • Surveyors • Planners
2524 Reliance Avenue, Apex, North Carolina 27539
Phone: 919.577.1080 Fax: 919.577.1081
NCBELS FIRM No. C-2378

CHANDLER'S RIDGE
CONSTRUCTION DOCUMENTS
CONSERVATION SUBDIVISION

410 W. YOUNG ST.
ROLESVILLE, NC
WAKE COUNTY

PUMP STATION DETAILS

Project Engineer:	TSS
Designed By:	TEP
Drawn By:	TEP
Checked By:	TSS
Scale:	
Date:	06/17/2020
Project Number:	P170347

SHEET
C608

ACCESS HATCH
(OR AS APPROVED BY ENGINEER)

SERIES W1R ACCESS DOOR

www.HallidayProducts.com
Phone 800–298–1027
Fax 407–298–4534
Sales@HallidayProducts.com

STANDARD FEATURES:

- AUTO–LOCK T–316 STAINLESS STEEL HOLD OPEN ARM WITH RELEASE HANDLE
- T–316 STAINLESS STEEL HINGES AND ATTACHING HARDWARE
- NON–CORROSIVE LOCKING BAR
- SINGLE LEAF CONSTRUCTION
- 300 LBS. PER SQ. FT. LOAD RATING (1464 KG. PER SQ. METER LOAD RATING)
- EXTRUDED ALUMINUM CHANNEL FRAME
- RECESSED LIFTING HANDLE
- LIFETIME GUARANTEE

STANDARD SIZES

QTY.	MODEL NO.	A DIM. INCHES (MM)	C DIM. INCHES (MM)	UNIT WT. LBS. (KG.)
	W1R2424	24 (610)	24 (610)	46 (20)
	W1R2430	24 (610)	30 (762)	51 (23)
	W1R2436	24 (610)	36 (914)	61 (28)
	W1R2442	24 (610)	42 (1067)	77 (35)
	W1R2448	24 (610)	48 (1219)	85 (39)
	W1R3030	30 (762)	30 (762)	62 (28)
	W1R3036	30 (762)	36 (914)	69 (31)
	W1R3042	30 (762)	42 (1067)	77 (35)
	W1R3048	30 (762)	48 (1219)	85 (39)
	W1R3054	30 (762)	54 (1372)	99 (45)
	W1R3060	30 (762)	60 (1524)	102 (46)
	W1R3636	36 (914)	36 (914)	78 (35)
	W1R3642	36 (914)	42 (1067)	89 (40)
	W1R3648	36 (914)	48 (1219)	97 (44)
	W1R3654	36 (914)	54 (1372)	107 (49)
	W1R3660	36 (914)	60 (1524)	116 (53)
	W1R3666	36 (914)	66 (1676)	126 (57)
	W1R3672	36 (914)	72 (1829)	135 (61)
	W1R4242	42 (1067)	42 (1067)	108 (49)

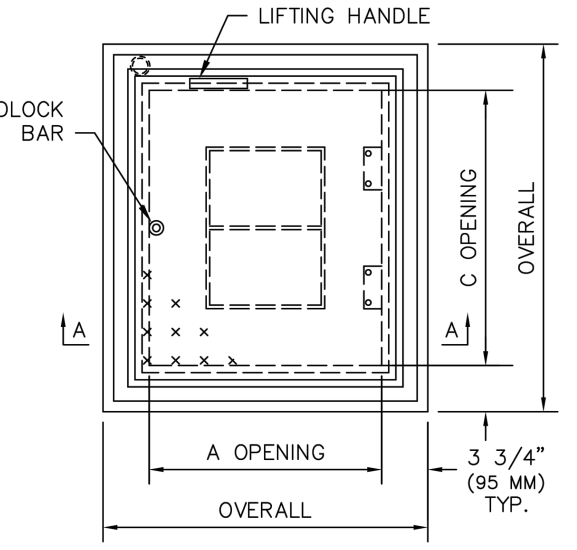

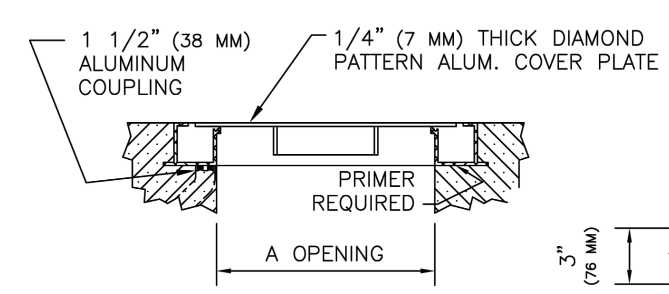

SECTION A–A

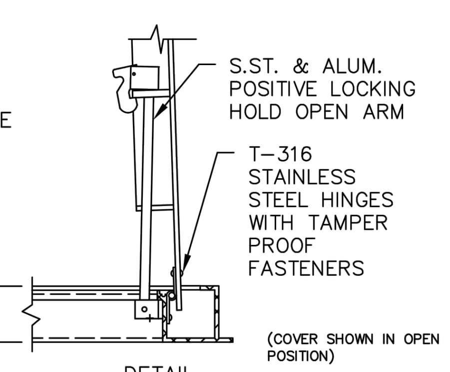

DETAIL

HATCH DOOR NOTES:

1. HATCH SHALL BE SINGLE LEAF, PEDESTRIAN RATED, CHANNEL FRAME, ALUMINUM DIAMOND PATTERN PLATE DOOR.
2. HATCH DOORS SHALL BE WATERTIGHT, EQUIPPED WITH NEOPRENE GASKET, HINGED WITH LOCKING MECHANISM (HASP), AND AUTOMATIC HOLD OPEN ARM.
3. ENSURE HATCH DOOR RESTS EVENLY ON FRAME ALL AROUND.
4. ALL HARDWARE SHALL BE ZINC PLATED STEEL-CHROMATE SEALED OR STAINLESS STEEL.

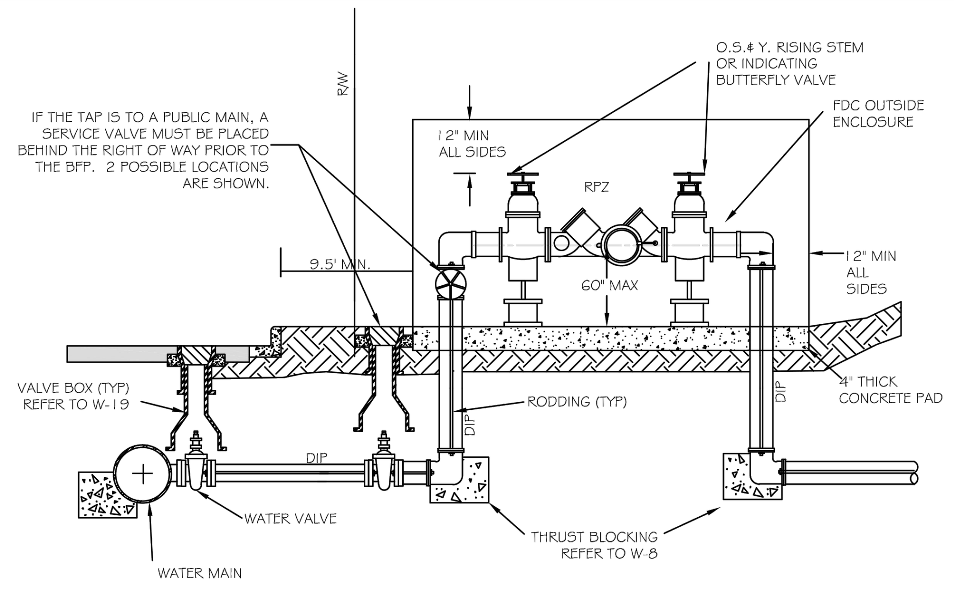

1. ALL ABOVE GROUND ENCLOSURES MUST HAVE ADEQUATE DRAINAGE (TWICE THE DIAMETER OF THE SUPPLY PIPE) TO DAYLIGHT ABOVE GRADE.
2. REDUCED PRESSURE BACKFLOW PRESENTERS MAY BE LOCATED IN A BUILDING PROVIDED THERE ARE NO OTHER UNPROTECTED TAPS BETWEEN THE MAIN AND THE BUILDING. DRAINAGE IN A BUILDING MUST BE TWICE THE DIAMETER OF THE SUPPY PIPE.
3. ABOVE GROUND INSULATED VAULTS MUST BE ASSE 1060 APPROVED ABOVE GROUND ENCLOSURES. SEE CROSS CONNECTION MANUAL FOR ENCLOSURE FREEZE PROTECTION AND CERTIFICATION REQUIREMENTS.
4. RESIDENTIAL LAWN IRRIGATION R.P. ASSEMBLIES THAT ARE REMOVED TO PREVENT FREEZING IN THE WINTER MONTHS MUST BE CAPPED OFF. ALL ABOVE GROUND ASSEMBLIES, EXCEPT RESIDENTIAL LAWN IRRIGATION ASSEMBLIES, MUST BE PROTECTED FROM FROST.
6. FOR ENCLOSURE DIMENSIONS SEE DETAIL W-34.
7. STEEL RODS AND BOLTS SHALL BE 3/4" HOT DIPPED GALVANIZED.
8. ALL ASSEMBLIES MUST BE ON THE CURRENT APPROVAL LIST.

CITY OF RALEIGH
DEPARTMENT OF PUBLIC UTILITIES
TYPICAL REDUCED PRESSURE ZONE BACKFLOW PREVENTER ASSEMBLY

DWG. NO.	REVISIONS	DATE	REVISIONS	DATE
W-36	Y.C.A.	12-31-91	A.B.B.	7-10-04
	D.W.C.	11-8-99	D.H.L.	6/18/08

CONCRETE 4000PSI 28DAYS PER ASTM C–31

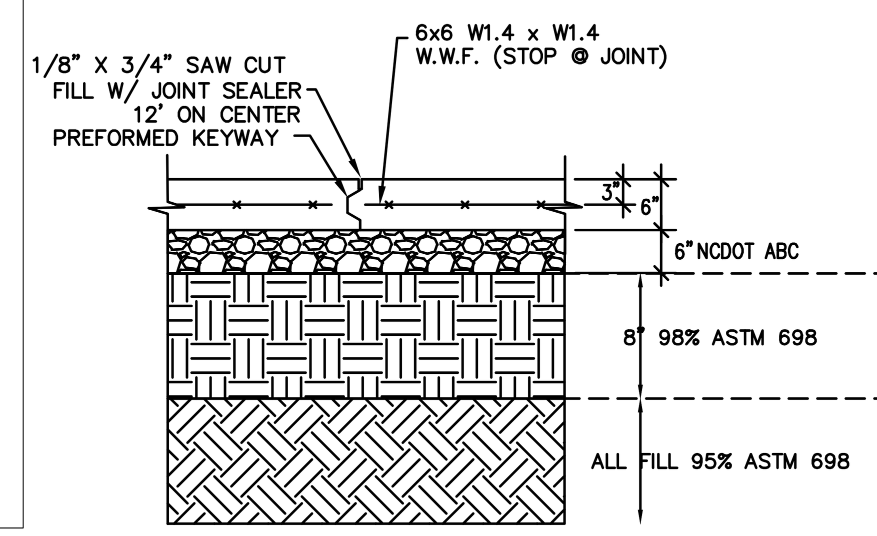

CONCRETE DRIVE CROSSECTION

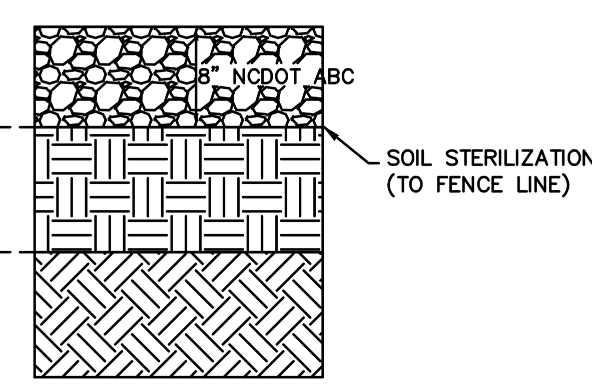

PUMP STATION PAD

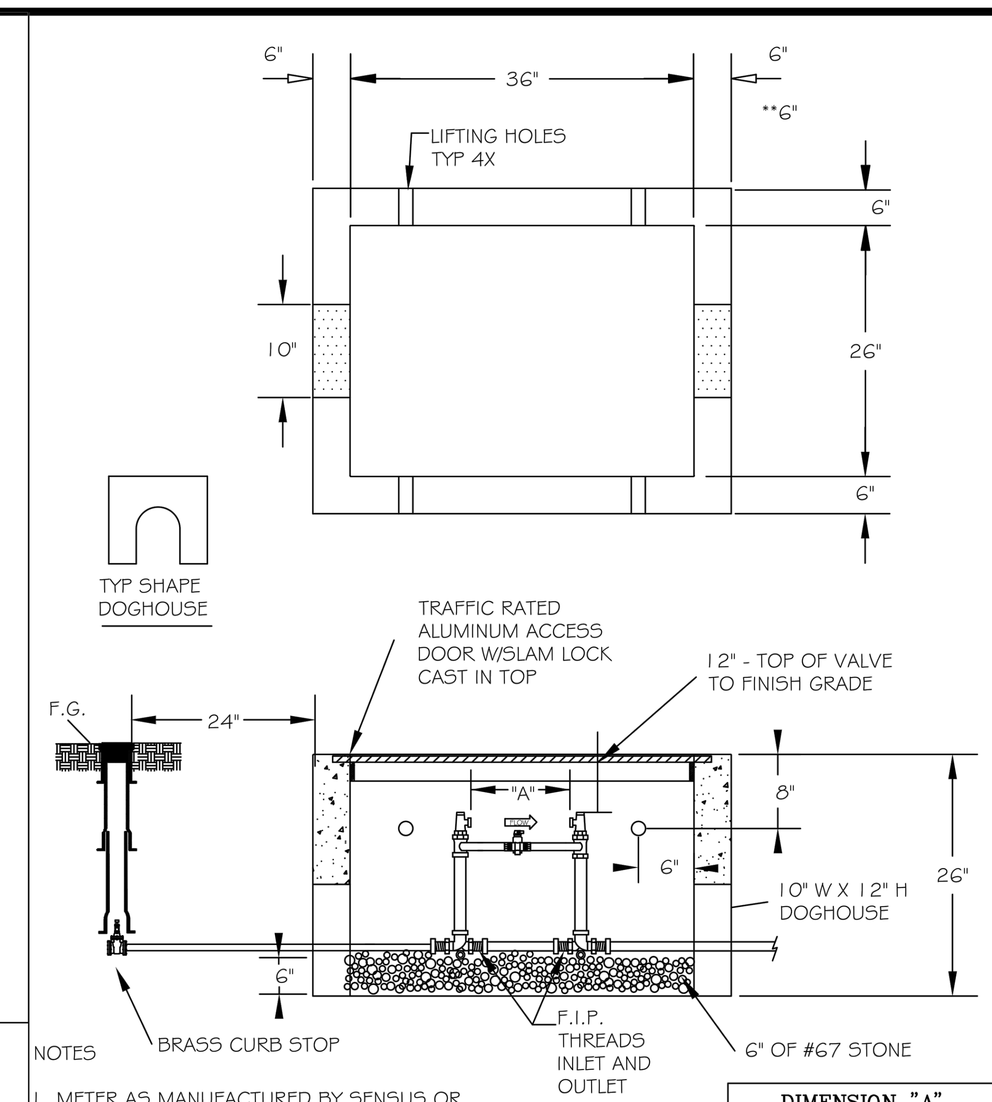

NOTES

1. METER AS MANUFACTURED BY SENSUS OR NEPTUNE.
2. BACKFILL TAMPED IN 6" LIFTS.
3. REINFORCEMENT: #4 @ 6" OCEW
4. CONCRETE: 4,000 PSI @ 28 DAYS
5. ALL RPZ BACKFLOW PREVENTION DEVICES MUST BE INSTALLED PRIOR TO METER BEING SET.
6) ALL COPPER SETTERS ARE TO HAVE A BALL TYPE SHUT OFF VALVE ON BOTH SIDES OF COPPER SETTER WITH HIGH RISE BYPASS THAT IS MANUFACTURED BY FORD, MUELLER, OR AY McDONALD. (NO EXCEPTIONS)

DIMENSION "A"	
1½" METER	13¼"
2" METER	17¼"

** TRAFFIC RATED VAULT WALL THICKNESS

CITY OF RALEIGH
DEPARTMENT OF PUBLIC UTILITIES
TYPICAL 1 1/2"- 2" WATER METER BOX INSTALLATION

DWG. NO.	REVISIONS	DATE	REVISIONS	DATE
W-31	A.B.B.	8-17-04	J.P.S.	11-4-10
	D.H.L.	6-18-08		

APPROVED METHOD FOR EXTENSION OF VALVE BOX

NOTE: 2'x 2'x 6" CONCRETE PAD REQUIRED ON ALL VALVES. NO PRECAST CONCRETE DOUGHNUT ALLOWED.

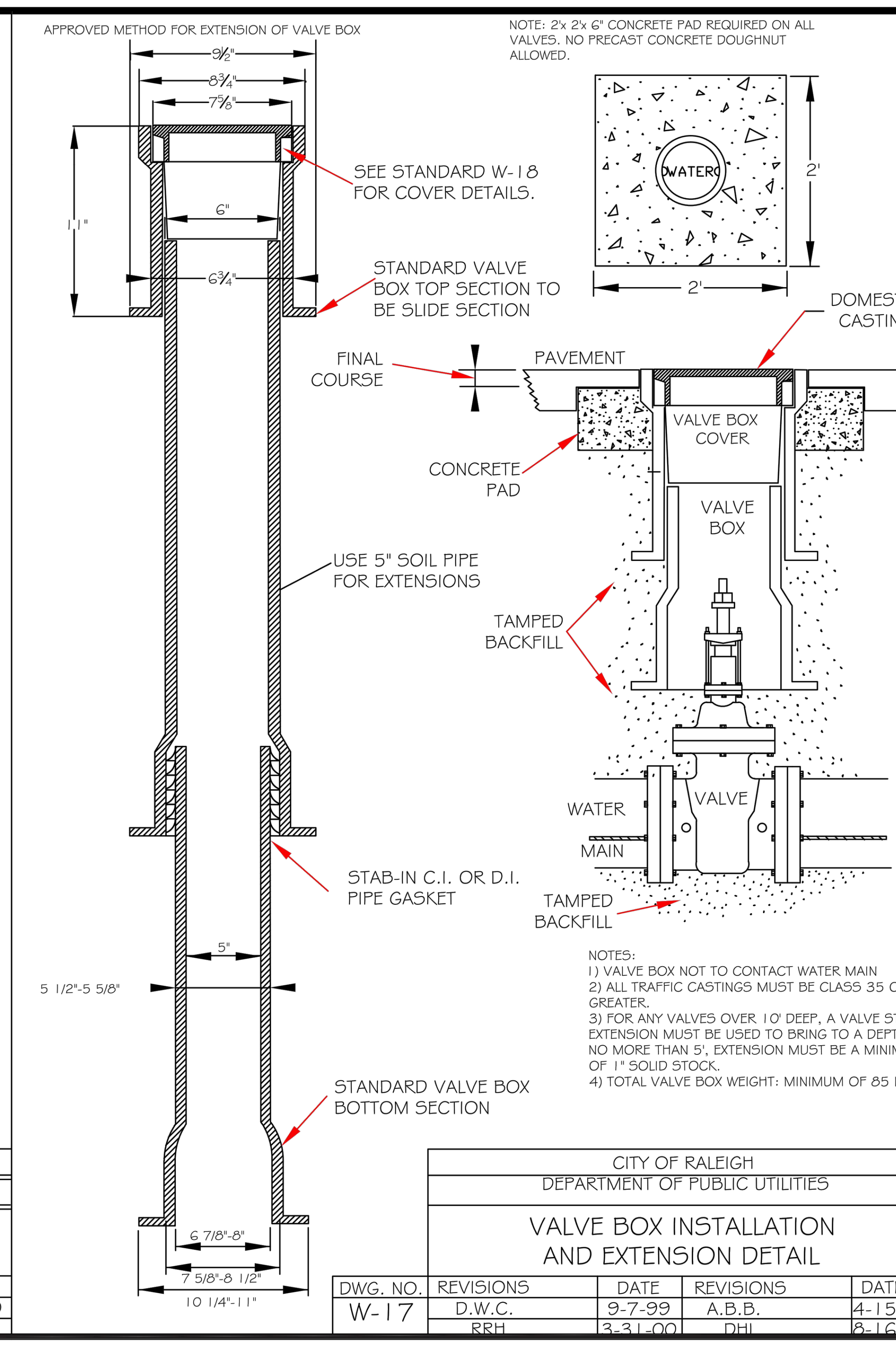

NOTES:
1) VALVE BOX NOT TO CONTACT WATER MAIN
2) ALL TRAFFIC CASTINGS MUST BE CLASS 35 OR GREATER.
3) FOR ANY VALVES OVER 10' DEEP, A VALVE STEM EXTENSION MUST BE USED TO BRING TO A DEPTH OF NO MORE THAN 5', EXTENSION MUST BE A MINIMUM OF 1" SOLID STOCK.
4) TOTAL VALVE BOX WEIGHT: MINIMUM OF 85 LBS.

CITY OF RALEIGH
DEPARTMENT OF PUBLIC UTILITIES
VALVE BOX INSTALLATION AND EXTENSION DETAIL

DWG. NO.	REVISIONS	DATE	REVISIONS	DATE
W-17	D.W.C.	9-7-99	A.B.B.	4-15-04
	RRH	3-31-00	DHL	8-16-07

STANDARD FENCE/GATE DETAIL

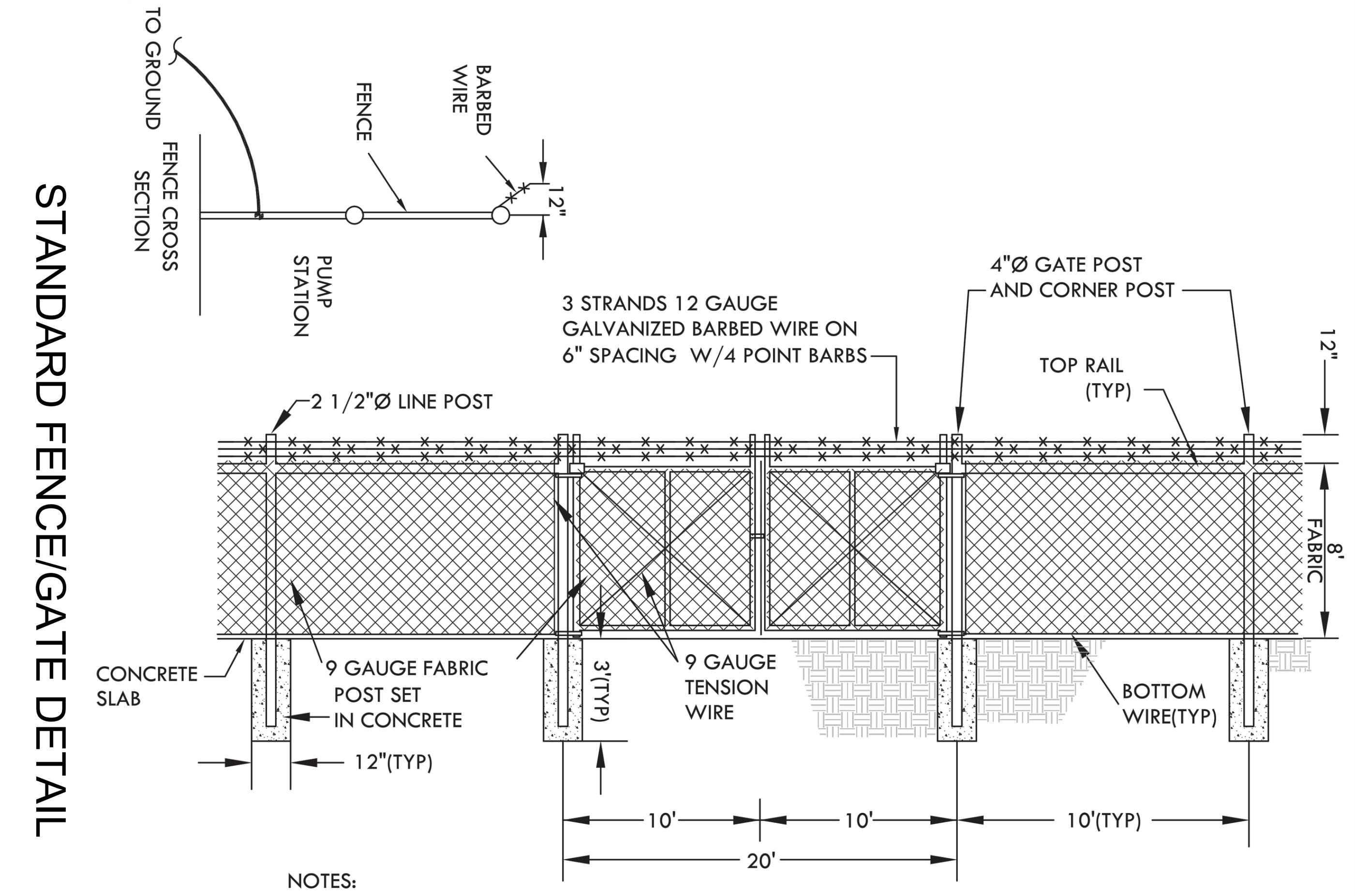

NOTES:

1. PVC FENCE SLATS REQUIRED. SLATS SHALL BE ARCHITECTURAL GREEN
2. FENCE SHALL BE COMPATIBLE WITH SURROUNDING NEIGHBORHOOD IN ACCORDANCE WITH THE UDO.

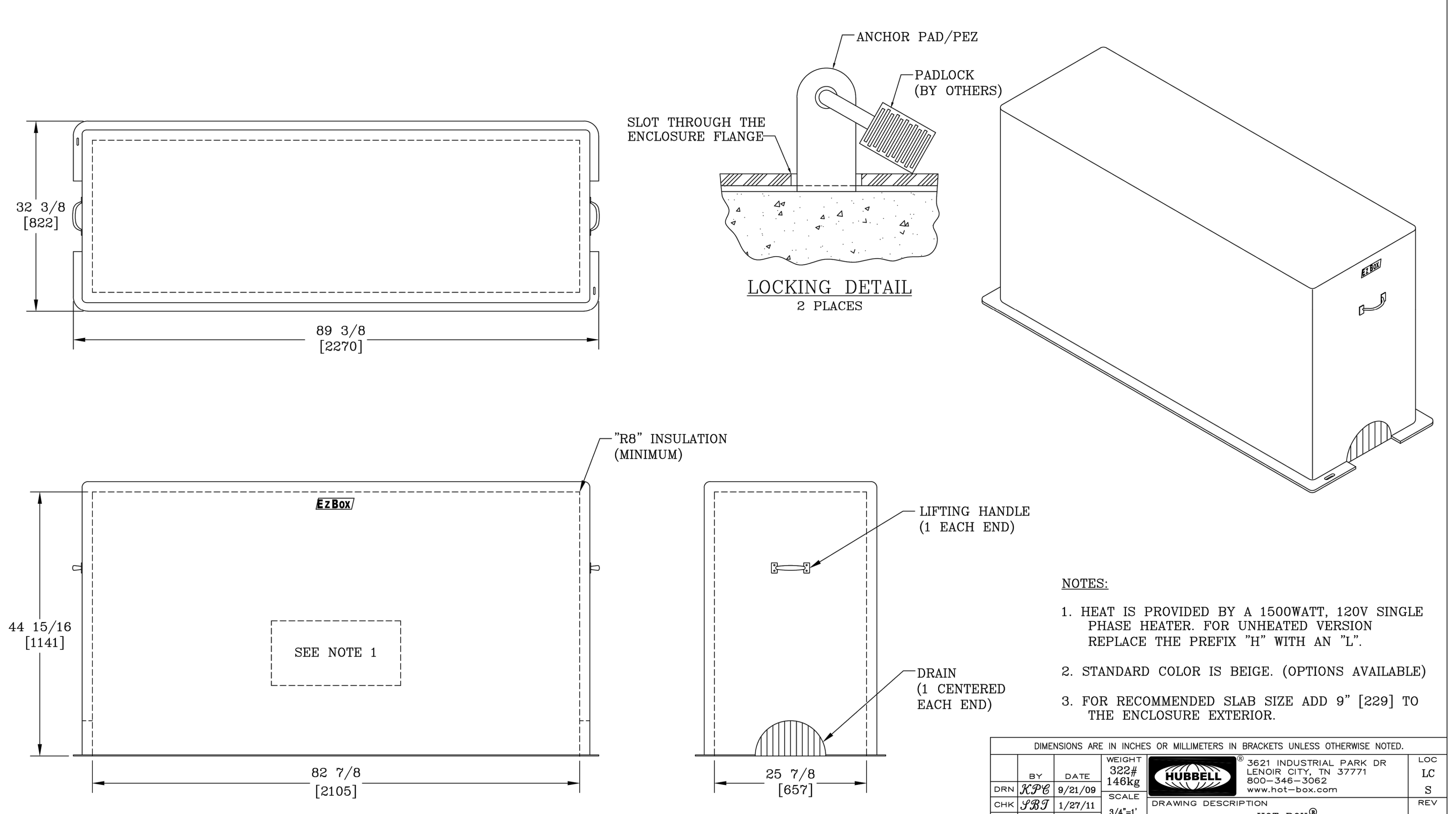

NOTES:

1. HEAT IS PROVIDED BY A 1500WATT, 120V SINGLE PHASE HEATER. FOR UNHEATED VERSION REPLACE THE PREFIX "H" WITH AN "L".
2. STANDARD COLOR IS BEIGE. (OPTIONS AVAILABLE)
3. FOR RECOMMENDED SLAB SIZE ADD 9" [229] TO THE ENCLOSURE EXTERIOR.

DIMENSIONS ARE IN INCHES OR MILLIMETERS IN BRACKETS UNLESS OTHERWISE NOTED.

	BY	DATE	WEIGHT 322# 146kg	HUBBELL 3621 INDUSTRIAL PARK DR, LENOIR CITY, TN 37771, 800–346–3062, www.hot–box.com	LOC LC S
DRN	KPC	9/21/09	SCALE 3/4"=1'	DRAWING DESCRIPTION: HOT BOX® FIBERGLASS DROP OVER ENCLOSURE (HEZ3S)	REV B
CHK	SBJ	1/27/11			1/11
ENG			SIZE B		
APR					
APR					
PROJECT NUMBER 09915				SHEET 1 OF 1	DRAWING NUMBER HE026083045

03	CONSTRUCTION DOCUMENTS 3rd SUBMITTAL	06/17/2020
02	CONSTRUCTION DOCUMENTS 2nd SUBMITTAL	04/15/2020
01	CONSTRUCTION DOCUMENTS 1st SUBMITTAL	01/13/2020
REV	DESCRIPTION	DATE
	REVISIONS	

P:\2017 Projects\170347 Chandlers Ridge\Eng\CAD\DWG\TP SHEET\P_170347_C607_PUMP_STATION.dwg

ATTENTION CONTRACTORS

The ***Construction Contractor*** responsible for the extension of water, sewer, and/or reuse, as approved in these plans, is responsible for ***contacting*** the ***Public Utilities Department*** at ***(919) 996-4540*** at least ***twenty four hours*** prior to beginning any of their construction.

Failure to notify both ***City Departments*** in advance of beginning construction, will result in the issuance of ***monetary fines***, and require reinstallation of any water or sewer facilities not inspected as a result of this notification failure.

Failure to call for ***Inspection***, ***Install a Downstream Plug***, have ***Permitted Plans*** on the ***Jobsite***, or any other ***Violation*** of ***City of Raleigh Standards*** will result in a ***Fine and Possible Exclusion*** from future work in the ***City of Raleigh***.

SITE PERMITTING APPROVAL

Water and Sewer Permits (If applicable)

The City of Raleigh consents to the connection and extension of the City's **Public Sewer System** as shown on this plan. The material and Construction methods used for this project shall conform to the standards and specifications of the City's Public Utilities Handbook. **City of Raleigh Public Utilities Department Permit #** ________________

The City of Raleigh consents to the connection and extension of the City's **Public Water System** as shown on this plan. The material and Construction methods used for this project shall conform to the standards and specifications of the City's Public Utilities Handbook. **City of Raleigh Public Utilities Department Permit #** ________________

The City of Raleigh consents to the connection to its public sewer system and extension of the **private sewer collection** system as shown on this plan. The material and constructions methods used for this project shall conform to the standards and specifications of the City's Public Utilities Handbook.

City of Raleigh Public Utilities Department Permit # ________________

CITY OF RALEIGH - PLANS AUTHORIZED FOR CONSTRUCTION

Electronic Approval: This approval is being issued electronically. This approval is valid only upon the signature of a City of Raleigh Review Officer below. The City will retain a copy of the approved plans. Any work authorized by this approval must proceed in accordance with the plans kept on file with the City. This electronic approval may not be edited once issued. Any modification to this approval once issued will invalidate this approval.

City of Raleigh Development Approval ________________________________

Raleigh Water Review Officer

NORTH CAROLINA PROFESSIONAL SEAL 20234 ENGINEER THOMAS S. SPEIGHT, JR. 6/17/2020

Bateman Civil Survey Company
Engineers • Surveyors • Planners
2524 Reliance Avenue, Apex, North Carolina 27539
Phone: 919.577.1080 Fax: 919.577.1081
NCBELS FIRM No. C-2378

CHANDLER'S RIDGE
CONSTRUCTION DOCUMENTS
CONSERVATION SUBDIVISION
410 W. YOUNG ST.
ROLESVILLE, NC
WAKE COUNTY

PUMP STATION DETAILS

Project Engineer:	TSS
Designed By:	TEP
Drawn By:	TEP
Checked By:	TSS
Scale:	
Date:	06/17/2020
Project Number:	P170347

SHEET
C609

NOTES:
1. THIS IS A CONCEPTUAL GENERAL ARRANGEMENT DRAWING ONLY.
2. ACTUAL EQUIPMENT AND PIPING LOCATIONS MAY VARY. PAD & EQUIPMENT LAYOUT SHOWN ARE ONLY SUGGESTED.
3. CONTAINMENT CURBING IS NOT SHOWN OR INCLUDED.
4. CAUTION: DOOR ON CHEMFEED SYSTEM EXTENDS PAST PAD DIMENSIONS.
5. STUB-UP FOR ELECTRICAL CONDUIT AND DISCHARGE PIPING TO BE DETERMINED PER SITE PLACEMENT.
6. REFERENCE PROJECT SUBMITTALS FOR FURTHER SYSTEM INFORMATION.

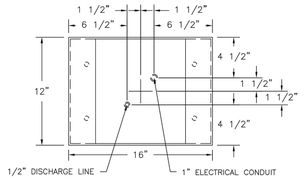

RISER/SLAB PENETRATION DETAIL
NTS

NOMENCLATURE

1. VDLT CONTROL BOX ASSEMBLY
2. PRESSURE LEVEL INDICATOR ASSY
3. ø1/2" OVERFILL LEVEL ASSEMBLY
4. ø2" FILL PIPING ASSEMBLY
5. ø1/2" SUCTION PIPING ASSEMBLY
6. CALIBRATION STAND ASSEMBLY
7. CHEMICAL FEED PUMPS
8. 16" X 12" SS PIPE STAND RISER
9. 36" X 24" X 48" SS PIPE/UTILITY TANK STAND
10. 1,550 GALLON DW TANK: 8'-0" DIA, 6'-11" HIGH

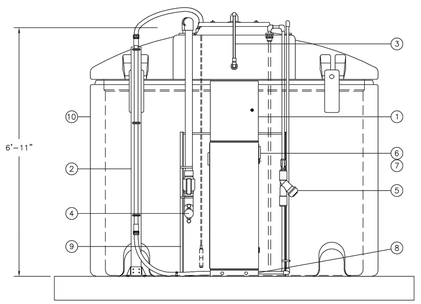

ELEVATION VIEW

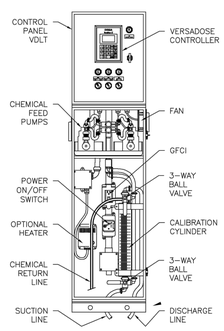

DETAIL VIEW
NOT TO SCALE

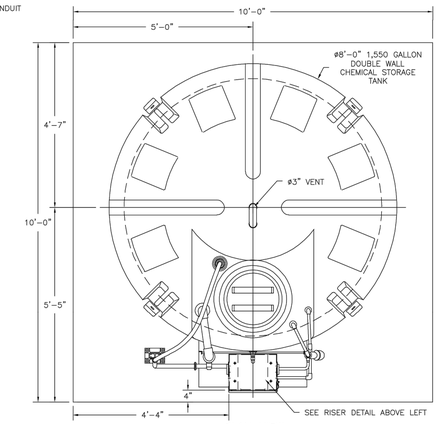

PLAN VIEW

CONTRACTOR SUPPLIER CONTACT:

RICHARD SANCHEZ
TECHNICAL SALES REPRESENTATIVE-
NORTH CAROLINA

EVOQUA WATER TECHNOLOGIES LLC
2650 TALLEVAST RD.
SARASOTA, FLORIDA, 34243; USA

ASSY CHEM-FEED 1550-DW 8'-0"D X 6'-11"H
PRESSURE LEVEL INDICATOR

REV	DESCRIPTION	DATE	DWN	CHKD	APVD	ECN

COMPANY CONFIDENTIAL
DOCUMENT AND ALL INFORMATION CONTAINED HEREIN ARE THE PROPERTY OF EVOQUA AND/OR ITS AFFILIATES. THE DESIGNS, CONCEPTS AND INFORMATION CONTAINED HEREIN ARE PROPRIETARY TO EVOQUA AND ARE SUBMITTED IN CONFIDENCE. THEY ARE NOT TRANSFERABLE AND MUST BE USED ONLY FOR THE PURPOSE FOR WHICH THEY ARE SUBMITTED. UNLESS LICENSED, THEY MUST NOT BE DISCLOSED, REPRODUCED, LOANED OR USED IN ANY OTHER WAY WITHOUT PRIOR WRITTEN PERMISSION. THE RIGHTS OF EVOQUA IN NO EVENT WILL THEY BE USED IN ANY MANNER DETRIMENTAL TO THE INTEREST OF EVOQUA. ALL PATENT RIGHTS ARE RESERVED. UPON REQUEST OR ON ISSUE OF A COMPETITIVE BID, ALONG WITH ALL COPIES AND EXTRACTS, AND ALL RELATED NOTES AND ANALYSES, MUST BE RETURNED TO EVOQUA. ANY DISCLOSURE, REPRODUCTION OR ACCEPTANCE OF THE DELIVERY OF THIS DOCUMENT CONSTITUTES AGREEMENT TO THESE TERMS.

DESIGNER	DATE
REINBOLT	03/09/18
CHECKER	DATE
HEPNER	03/09/18
ENGINEER	DATE
STEWART	03/09/18
MANAGER	DATE
FILE:	
SCALE: 25	

TITLE: ASSY CHEM-FEED 1550-DW 8'-0"D X 6'-11"H PRESSURE LEVEL INDICATOR

CLIENT

EVOQUA WATER TECHNOLOGIES — WATER TECHNOLOGIES, Sarasota, FL, 1-941-355-2971

PROJECT	DRAWING	SHEET	REV
SALES	BX-1550S-DW-VL-S-BL-PS-00	1 OF 1	000

TANK SUPPLIER

SEE SUPPLIER FOR INSTALL AND ORDER:
RICHARD SANCHEZ
EVOQUA WATER TECHNOLOGIES
919-455-6368
RICHARD.SANCHEZ@EVOQUA.COM

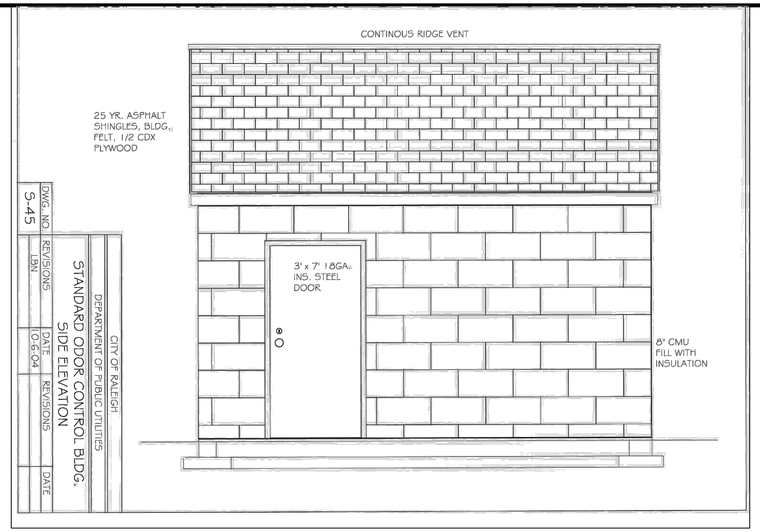

CITY OF RALEIGH
DEPARTMENT OF PUBLIC UTILITIES
STANDARD ODOR CONTROL BLDG.
SIDE ELEVATION

DWG. NO	REVISIONS	DATE	REVISIONS	DATE
S-45	LBN	10-6-04		

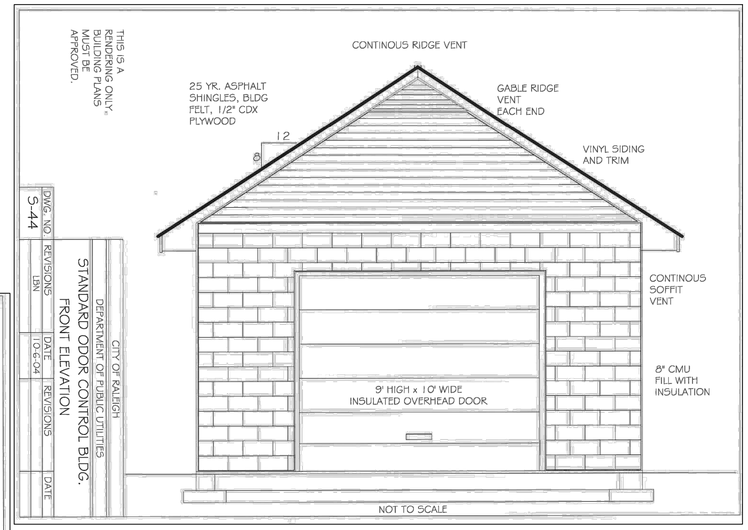

CITY OF RALEIGH
DEPARTMENT OF PUBLIC UTILITIES
STANDARD ODOR CONTROL BLDG.
FRONT ELEVATION

DWG. NO	REVISIONS	DATE	REVISIONS	DATE
S-44	LBN	10-6-04		

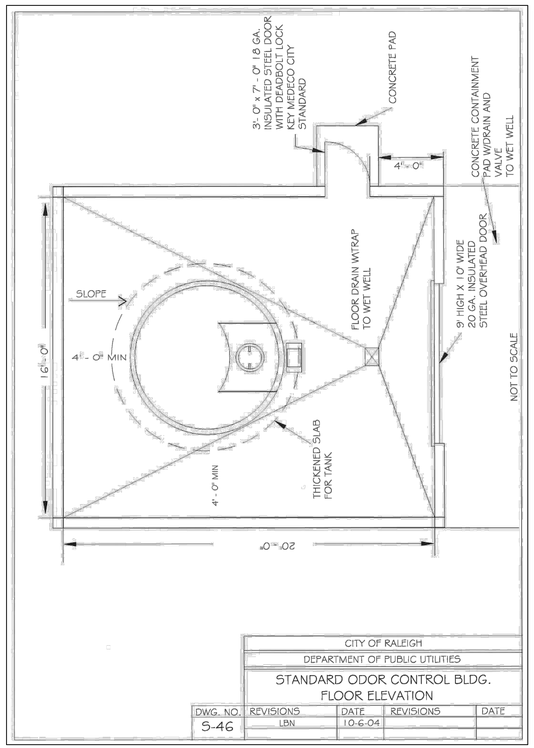

CITY OF RALEIGH
DEPARTMENT OF PUBLIC UTILITIES
STANDARD ODOR CONTROL BLDG.
FLOOR ELEVATION

DWG. NO.	REVISIONS	DATE	REVISIONS	DATE
S-46	LBN	10-6-04		

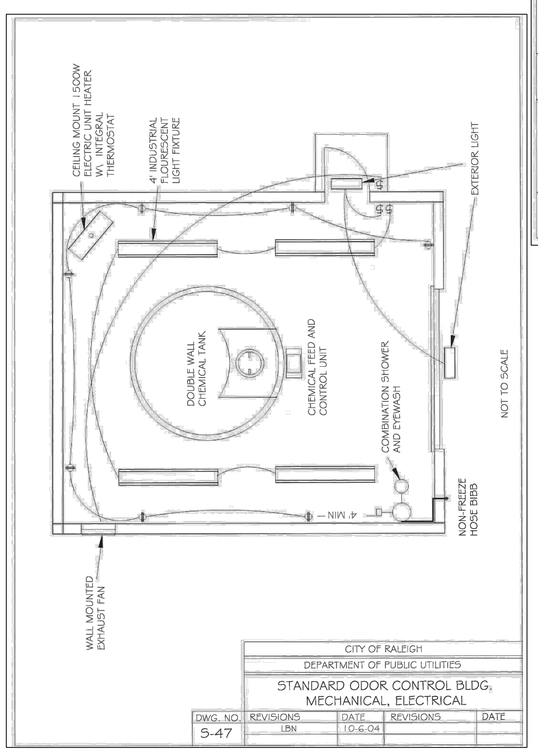

CITY OF RALEIGH
DEPARTMENT OF PUBLIC UTILITIES
STANDARD ODOR CONTROL BLDG.
MECHANICAL, ELECTRICAL

DWG. NO.	REVISIONS	DATE	REVISIONS	DATE
S-47	LBN	10-6-04		

REV	DESCRIPTION	DATE
03	CONSTRUCTION DOCUMENTS 3rd SUBMITTAL	06/17/2020
02	CONSTRUCTION DOCUMENTS 2nd SUBMITTAL	04/15/2020
01	CONSTRUCTION DOCUMENTS 1st SUBMITTAL	01/13/2020

REVISIONS

SITE PERMITTING APPROVAL

Water and Sewer Permits (If applicable)

The City of Raleigh consents to the connection and extension of the City's **Public Sewer System** as shown on this plan. The material and Construction methods used for this project shall conform to the standards and specifications of the City's Public Utilities Handbook. **City of Raleigh Public Utilities Department Permit #** _____

The City of Raleigh consents to the connection and extension of the City's **Public Water System** as shown on this plan. The material and Construction methods used for this project shall conform to the standards and specifications of the City's Public Utilities Handbook. **City of Raleigh Public Utilities Department Permit #** _____

The City of Raleigh consents to the connection to its public sewer system and extension of the **private sewer collection** system as shown on this plan. The material and constructions methods used for this project shall conform to the standards and specifications of the City's Public Utilities Handbook.

City of Raleigh Public Utilities Department Permit # _____

CITY OF RALEIGH - PLANS AUTHORIZED FOR CONSTRUCTION

Electronic Approval: This approval is being issued electronically. This approval is valid only upon the signature of a City of Raleigh Review Officer below. The City will retain a copy of the approved plans. Any work authorized by this approval must proceed in accordance with the plans kept on file with the City. This electronic approval may not be edited once issued. Any modification to this approval once issued will invalidate this approval.

City of Raleigh Development Approval _____

Raleigh Water Review Officer

NORTH CAROLINA PROFESSIONAL SEAL 20234 ENGINEER THOMAS S. SPEDDEN

Bateman Civil Survey Company
Engineers • Surveyors • Planners
2524 Reliance Avenue, Apex, North Carolina 27539
Phone: 919.577.1080 Fax: 919.577.1081
NCBELS FIRM No. C-2378

CHANDLER'S RIDGE
CONSTRUCTION DOCUMENTS
CONSERVATION SUBDIVISION
410 W. YOUNG ST.
ROLESVILLE, NC
WAKE COUNTY

ODOR CONTROL DETAILS

Project Engineer:	TSS
Designed By:	TEP
Drawn By:	TEP
Checked By:	TSS
Scale:	
Date:	06/17/2020
Project Number:	P170347

SHEET
C610

P:\2017 Projects\170347 Chandlers Ridge\Eng\CAD\DWG\TP SHEETS\P_170347_C607_PUMP_STATION.dwg

SITE PERMITTING APPROVAL

Water and Sewer Permits (If applicable)

The City of Raleigh consents to the connection and extension of the City's **Public Sewer System** as shown on this plan. The material and Construction methods used for this project shall conform to the standards and specifications of the City's Public Utilities Handbook. **City of Raleigh Public Utilities Department Permit #** _____

The City of Raleigh consents to the connection and extension of the City's **Public Water System** as shown on this plan. The material and Construction methods used for this project shall conform to the standards and specifications of the City's Public Utilities Handbook. **City of Raleigh Public Utilities Department Permit #** _____

The City of Raleigh consents to the connection to its public sewer system and extension of the **private sewer collection** system as shown on this plan. The material and constructions methods used for this project shall conform to the standards and specifications of the City's Public Utilities Handbook.

City of Raleigh Public Utilities Department Permit # _____

CITY OF RALEIGH - PLANS AUTHORIZED FOR CONSTRUCTION

Electronic Approval: This approval is being issued electronically. This approval is valid only upon the signature of a City of Raleigh Review Officer below. The City will retain a copy of the approved plans. Any work authorized by this approval must proceed in accordance with the plans kept on file with the City. This electronic approval may not be edited once issued. Any modification to this approval once issued will invalidate this approval.

City of Raleigh Development Approval _____

Raleigh Water Review Officer

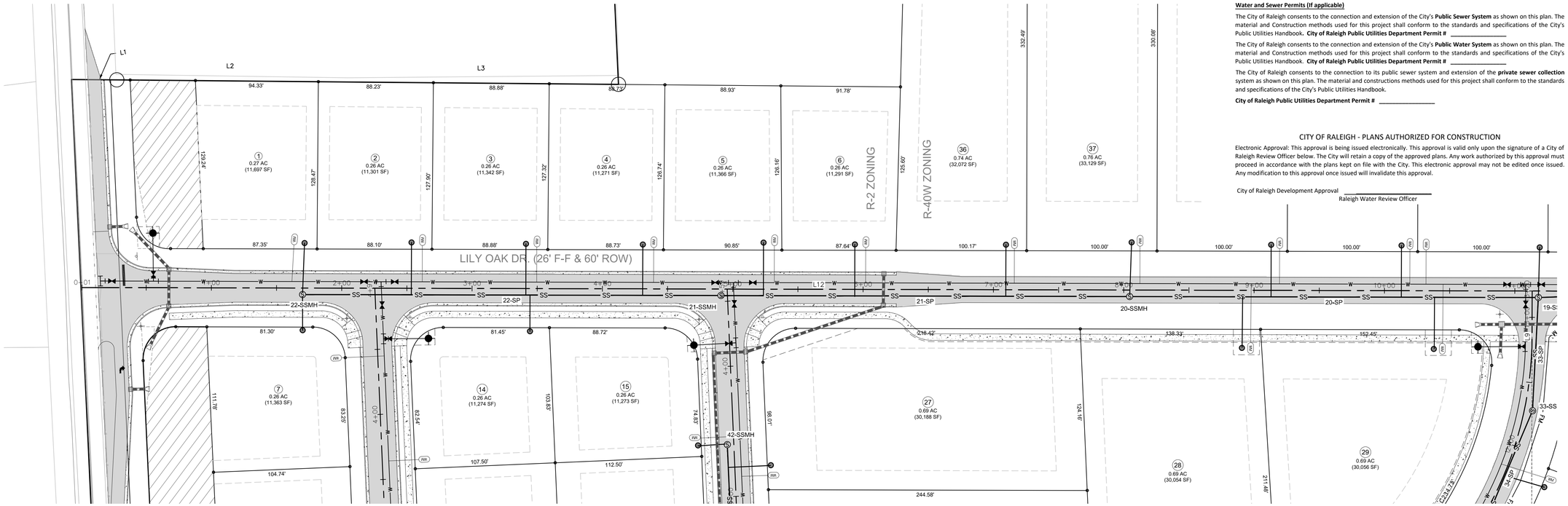

LILY OAK DR. - PLAN
SCALE: 1"=40'
STA: 0+00 - 10+50

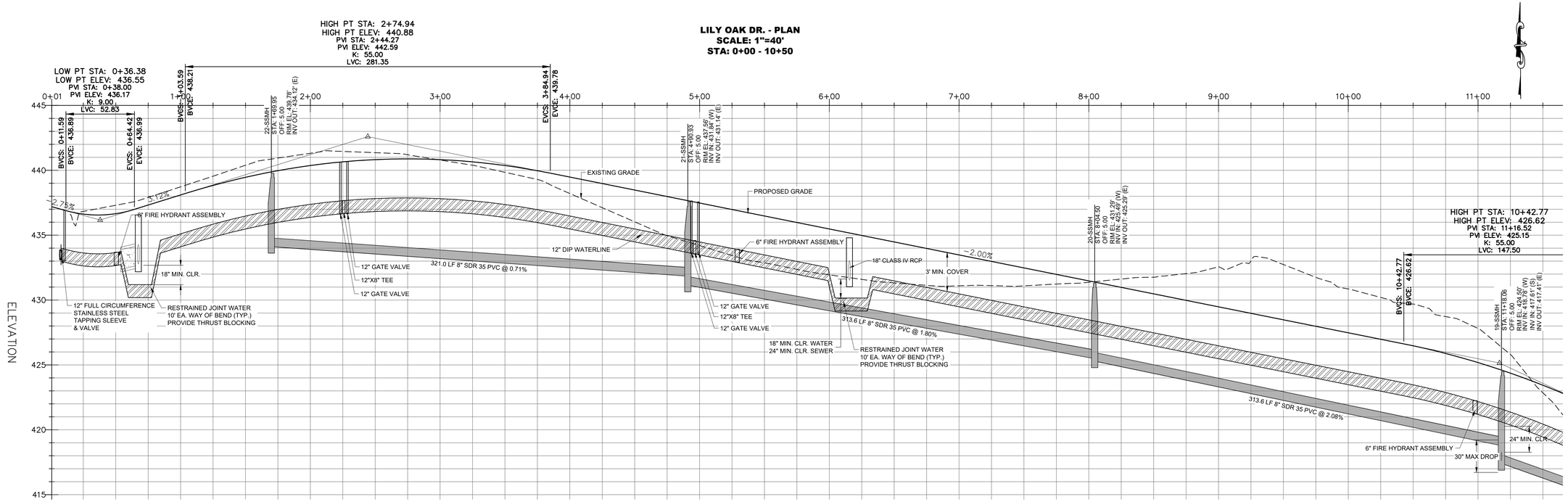

LILY OAK DR. - PROFILE
HOR. SCALE: 1"=40' VER. SCALE: 1"=4'
STA: 0+00 - 10+50

Line Table: Alignments

Line #	Length	Direction	Start Point	End Point
L12	1204.03	S81° 35' 14.57"E	0+00.66	12+04.70
L13	406.20	N89° 16' 35.52"E	13+96.84	18+03.04
L14	469.73	N0° 43' 24.48"W	21+64.33	26+34.06
L15	120.79	N38° 45' 44.62"W	27+86.76	29+07.55

Curve Table: Alignments

Curve #	Radius	Length	Chord Direction	Start Point	End Point
C7	1205.00	192.14	S86° 09' 19.52"E	12+04.70	13+96.84
C8	230.00	361.28	N44° 16' 35.52"E	18+03.04	21+64.33
C9	230.00	152.70	N19° 44' 34.55"W	26+34.06	27+86.76

REV	DESCRIPTION	DATE
03	CONSTRUCTION DOCUMENTS 3rd SUBMITTAL	06/17/2020
02	CONSTRUCTION DOCUMENTS 2nd SUBMITTAL	04/15/2020
01	CONSTRUCTION DOCUMENTS 1st SUBMITTAL	01/13/2020

REVISIONS

P:\2017 Projects\170347 Chandlers Ridge\Eng\CAD\DWG\TP SHEET\P_170347_C700_ROAD.dwg

NORTH CAROLINA PROFESSIONAL SEAL 20234 ENGINEER THOMAS S. SPOKOINY, JR.

Bateman Civil Survey Company
Engineers ● Surveyors ● Planners
2524 Reliance Avenue, Apex, North Carolina 27539
Phone: 919.577.1080 Fax: 919.577.1081
NCBELS FIRM No. C-2378

CHANDLER'S RIDGE
CONSTRUCTION DOCUMENTS
CONSERVATION SUBDIVISION
410 W. YOUNG ST.
ROLESVILLE, NC
WAKE COUNTY

LILY OAK DR.
PLAN & PROFILE

Project Engineer:	TSS
Designed By:	TEP
Drawn By:	TEP
Checked By:	TSS
Scale:	1" = 40'
Date:	06/17/2020
Project Number:	P170347

SHEET
C700

SITE PERMITTING APPROVAL

Water and Sewer Permits (If applicable)

The City of Raleigh consents to the connection and extension of the City's **Public Sewer System** as shown on this plan. The material and Construction methods used for this project shall conform to the standards and specifications of the City's Public Utilities Handbook. **City of Raleigh Public Utilities Department Permit #** _____

The City of Raleigh consents to the connection and extension of the City's **Public Water System** as shown on this plan. The material and Construction methods used for this project shall conform to the standards and specifications of the City's Public Utilities Handbook. **City of Raleigh Public Utilities Department Permit #** _____

The City of Raleigh consents to the connection to its public sewer system and extension of the **private sewer collection** system as shown on this plan. The material and constructions methods used for this project shall conform to the standards and specifications of the City's Public Utilities Handbook.

City of Raleigh Public Utilities Department Permit # _____

CITY OF RALEIGH - PLANS AUTHORIZED FOR CONSTRUCTION

Electronic Approval: This approval is being issued electronically. This approval is valid only upon the signature of a City of Raleigh Review Officer below. The City will retain a copy of the approved plans. Any work authorized by this approval must proceed in accordance with the plans kept on file with the City. This electronic approval may not be edited once issued. Any modification to this approval once issued will invalidate this approval.

City of Raleigh Development Approval _____

Raleigh Water Review Officer

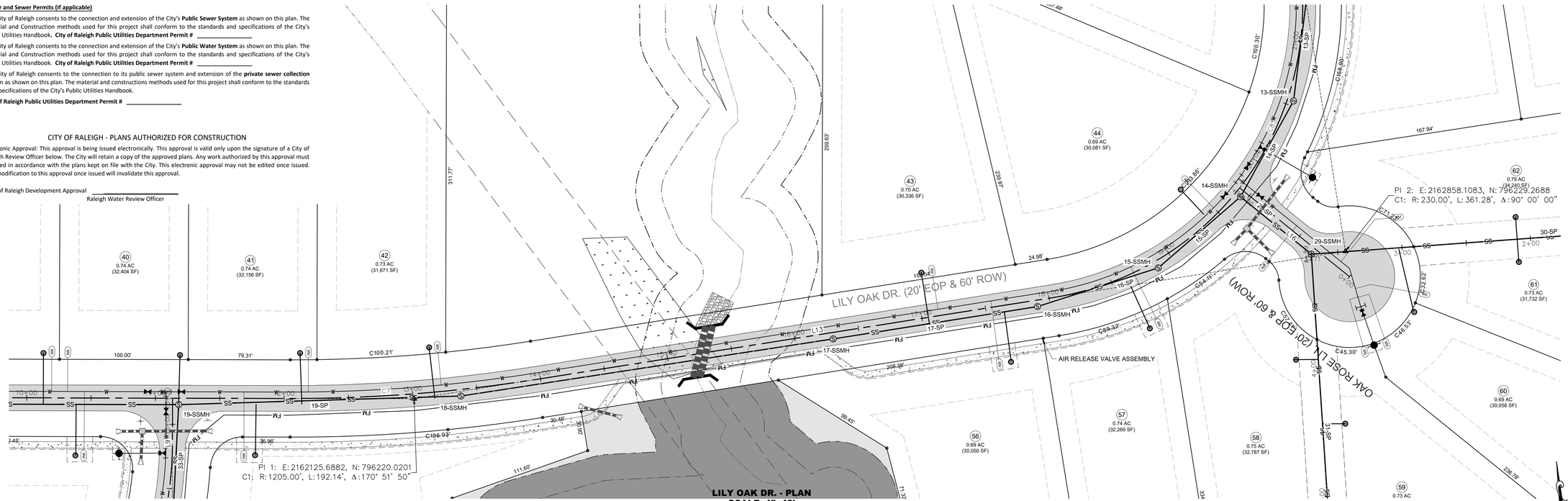

LILY OAK DR. - PLAN
SCALE: 1"=40'
STA: 10+50 - 21+00

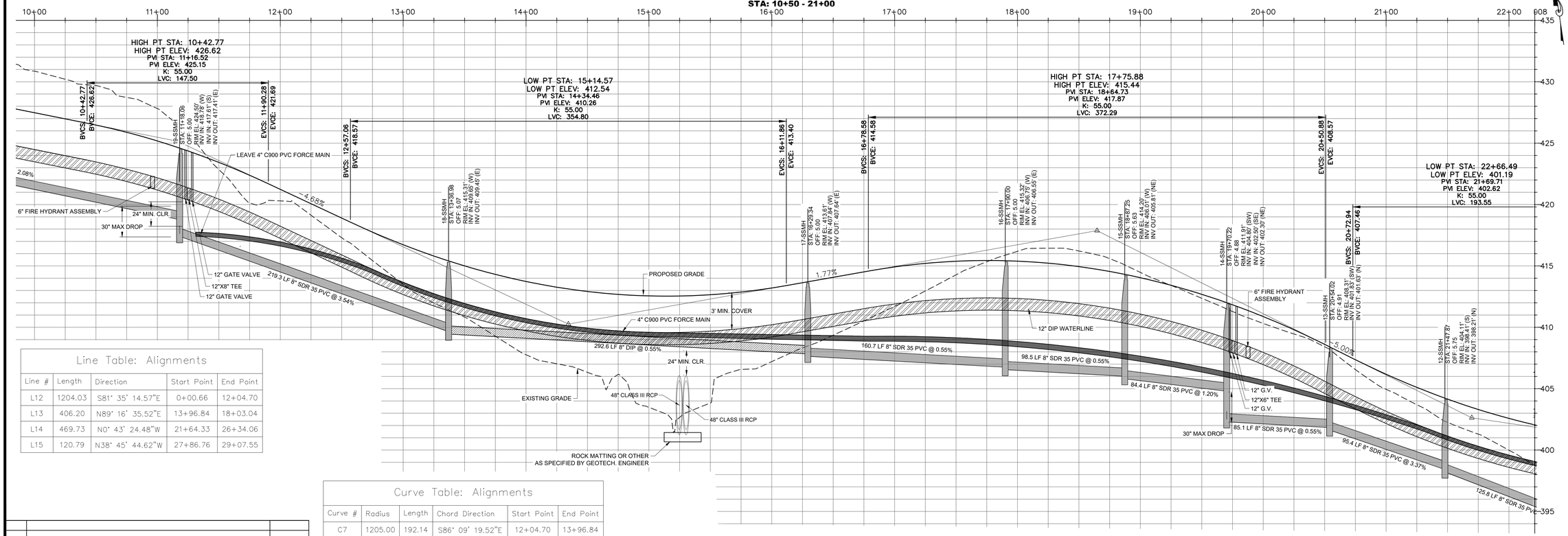

LILY OAK DR. - PROFILE
HOR. SCALE: 1"=40' VER. SCALE: 1"=4'
STA: 10+50 - 21+00

Line Table: Alignments

Line #	Length	Direction	Start Point	End Point
L12	1204.03	S81° 35' 14.57"E	0+00.66	12+04.70
L13	406.20	N89° 16' 35.52"E	13+96.84	18+03.04
L14	469.73	N0° 43' 24.48"W	21+64.33	26+34.06
L15	120.79	N38° 45' 44.62"W	27+86.76	29+07.55

Curve Table: Alignments

Curve #	Radius	Length	Chord Direction	Start Point	End Point
C7	1205.00	192.14	S86° 09' 19.52"E	12+04.70	13+96.84
C8	230.00	361.28	N44° 16' 35.52"E	18+03.04	21+64.33
C9	230.00	152.70	N19° 44' 34.55"W	26+34.06	27+86.76

REV	DESCRIPTION	DATE
03	CONSTRUCTION DOCUMENTS 3rd SUBMITTAL	06/17/2020
02	CONSTRUCTION DOCUMENTS 2nd SUBMITTAL	04/15/2020
01	CONSTRUCTION DOCUMENTS 1st SUBMITTAL	01/13/2020

REVISIONS

P:\2017 Projects\170347 Chandlers Ridge\Eng\CAD\DWG\TP SHEET\P_170347_C700_ROAD.dwg

NORTH CAROLINA PROFESSIONAL SEAL 20234 ENGINEER THOMAS S. SPOON, JR.

Bateman Civil Survey Company
Engineers ● Surveyors ● Planners
2524 Reliance Avenue, Apex, North Carolina 27539
Phone: 919.577.1080 Fax: 919.577.1081
NCBELS FIRM No. C-2378

CHANDLER'S RIDGE
CONSTRUCTION DOCUMENTS
CONSERVATION SUBDIVISION

410 W. YOUNG ST.
ROLESVILLE, NC
WAKE COUNTY

LILY OAK DR.
PLAN & PROFILE

Project Engineer:	TSS
Designed By:	TEP
Drawn By:	TEP
Checked By:	TSS
Scale:	1" = 40'
Date:	06/17/2020
Project Number:	P170347

SHEET

C701

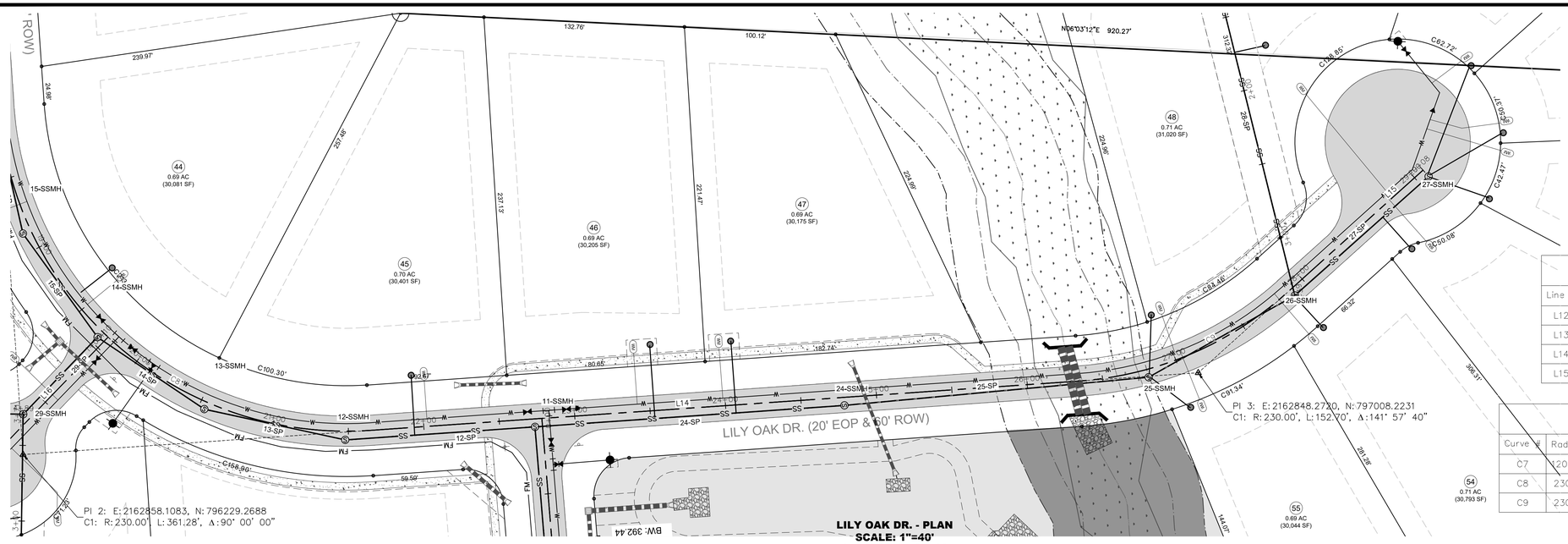

LILY OAK DR. - PLAN
SCALE: 1"=40'
STA: 21+00 - 29+08

Line Table: Alignments

Line #	Length	Direction	Start Point	End Point
L12	1204.03	S81° 35' 14.57"E	0+00.66	12+04.70
L13	406.20	N89° 16' 35.52"E	13+96.84	18+03.04
L14	469.73	N0° 43' 24.48"W	21+64.33	26+34.06
L15	120.79	N38° 45' 44.62"W	27+86.76	29+07.55

Curve Table: Alignments

Curve #	Radius	Length	Chord Direction	Start Point	End Point
C7	205.00	192.14	S86° 09' 19.52"E	12+04.70	13+96.84
C8	230.00	361.28	N44° 16' 35.52"E	18+03.04	21+64.33
C9	230.00	152.70	N19° 44' 34.55"W	26+34.06	27+86.76

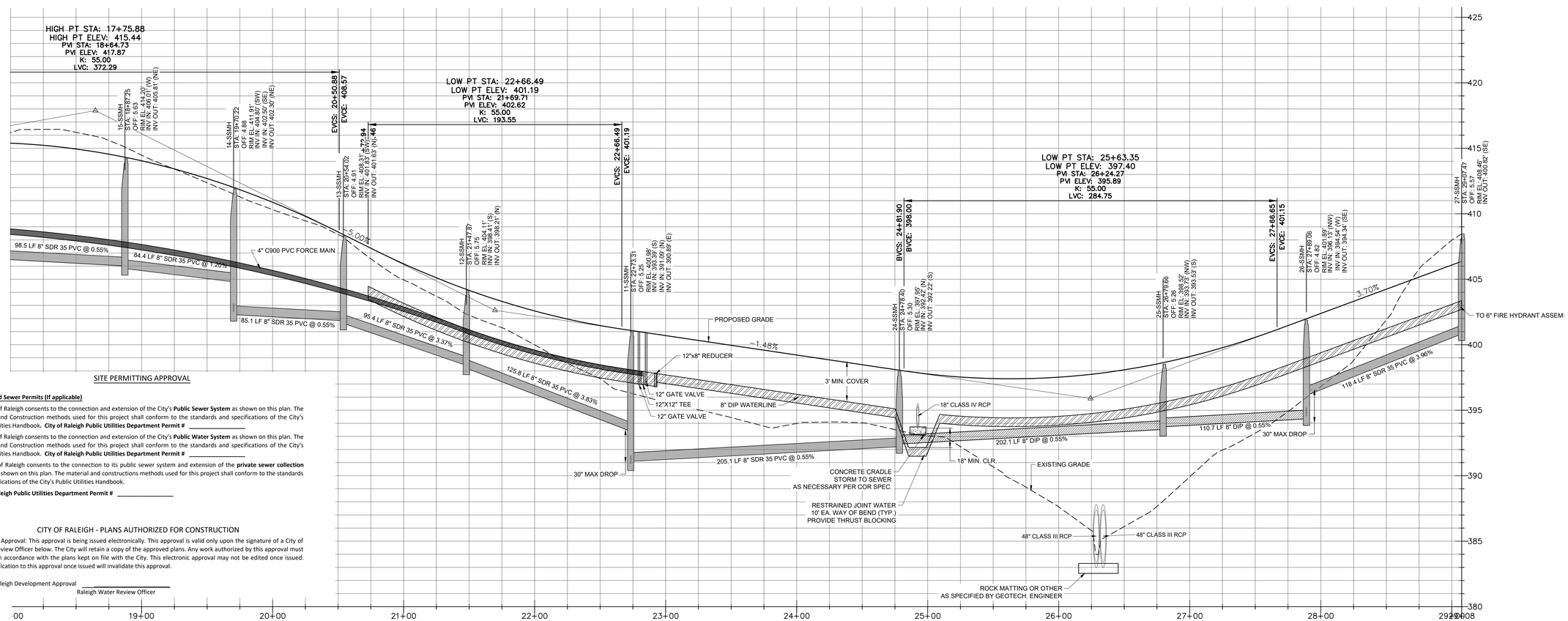

SITE PERMITTING APPROVAL

Water and Sewer Permits (If applicable)

The City of Raleigh consents to the connection and extension of the City's **Public Sewer System** as shown on this plan. The material and Construction methods used for this project shall conform to the standards and specifications of the City's Public Utilities Handbook. **City of Raleigh Public Utilities Department Permit #** _____

The City of Raleigh consents to the connection and extension of the City's **Public Water System** as shown on this plan. The material and Construction methods used for this project shall conform to the standards and specifications of the City's Public Utilities Handbook. **City of Raleigh Public Utilities Department Permit #** _____

The City of Raleigh consents to the connection to its public sewer system and extension of the **private sewer collection** system as shown on this plan. The material and constructions methods used for this project shall conform to the standards and specifications of the City's Public Utilities Handbook.

City of Raleigh Public Utilities Department Permit # _____

CITY OF RALEIGH - PLANS AUTHORIZED FOR CONSTRUCTION

Electronic Approval: This approval is being issued electronically. This approval is valid only upon the signature of a City of Raleigh Review Officer below. The City will retain a copy of the approved plans. Any work authorized by this approval must proceed in accordance with the plans kept on file with the City. This electronic approval may not be edited once issued. Any modification to this approval once issued will invalidate this approval.

City of Raleigh Development Approval _____
Raleigh Water Review Officer

REV	DESCRIPTION	DATE
03	CONSTRUCTION DOCUMENTS 3rd SUBMITTAL	06/17/2020
02	CONSTRUCTION DOCUMENTS 2nd SUBMITTAL	04/15/2020
01	CONSTRUCTION DOCUMENTS 1st SUBMITTAL	01/13/2020

REVISIONS

LILY OAK DR. - PROFILE
HOR. SCALE: 1"=40' VER. SCALE: 1"=4'
STA: 21+00 - 29+08

P:\2017 Projects\170347 Chandlers Ridge\Eng\CAD\DWG\TP SHEET\P - 170347_C700_ROAD.dwg

NORTH CAROLINA PROFESSIONAL SEAL 20234 ENGINEER THOMAS S. SPOCHT, JR.

Bateman Civil Survey Company
Engineers • Surveyors • Planners
2524 Reliance Avenue, Apex, North Carolina 27539
Phone: 919.577.1080 Fax: 919.577.1081
NCBELS FIRM No. C-2378

CHANDLER'S RIDGE
CONSTRUCTION DOCUMENTS
CONSERVATION SUBDIVISION
410 W. YOUNG ST.
ROLESVILLE, NC
WAKE COUNTY

LILY OAK DR.
PLAN & PROFILE

Project Engineer:	TSS
Designed By:	TEP
Drawn By:	TEP
Checked By:	TSS
Scale:	1" = 40'
Date:	06/17/2020
Project Number:	P170347

SHEET
C702

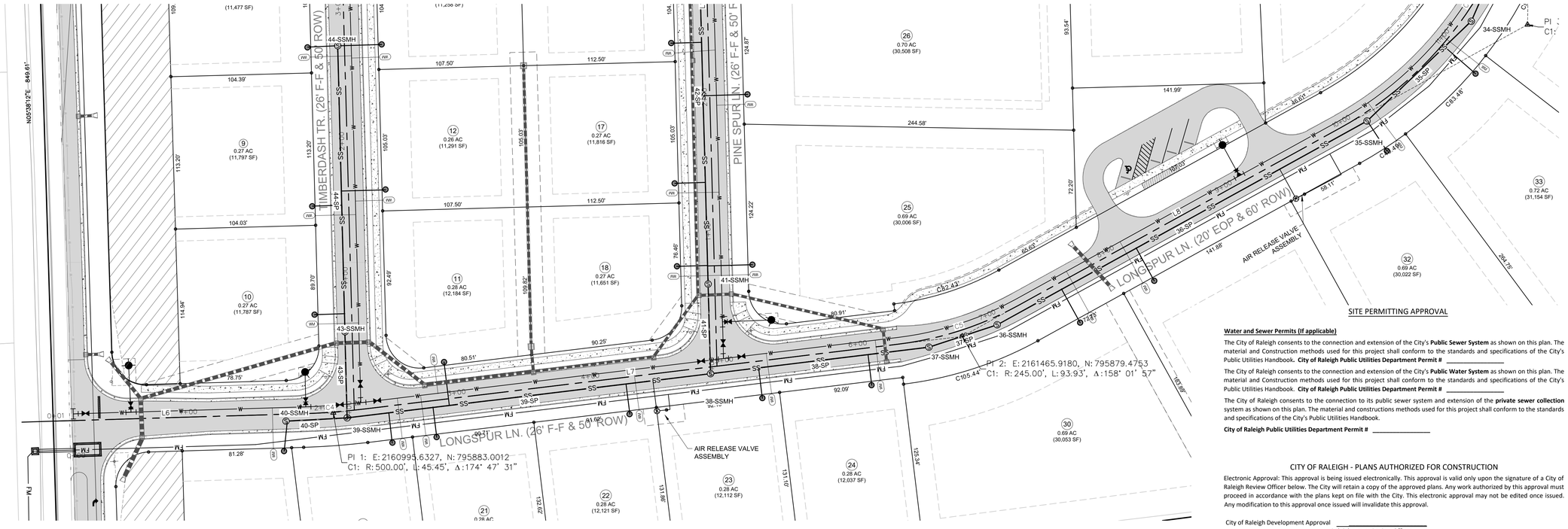

Water and Sewer Permits (If applicable)

The City of Raleigh consents to the connection and extension of the City's **Public Sewer System** as shown on this plan. The material and Construction methods used for this project shall conform to the standards and specifications of the City's Public Utilities Handbook. **City of Raleigh Public Utilities Department Permit #** _____

The City of Raleigh consents to the connection and extension of the City's **Public Water System** as shown on this plan. The material and Construction methods used for this project shall conform to the standards and specifications of the City's Public Utilities Handbook. **City of Raleigh Public Utilities Department Permit #** _____

The City of Raleigh consents to the connection to its public sewer system and extension of the **private sewer collection** system as shown on this plan. The material and constructions methods used for this project shall conform to the standards and specifications of the City's Public Utilities Handbook.

City of Raleigh Public Utilities Department Permit # _____

CITY OF RALEIGH - PLANS AUTHORIZED FOR CONSTRUCTION

Electronic Approval: This approval is being issued electronically. This approval is valid only upon the signature of a City of Raleigh Review Officer below. The City will retain a copy of the approved plans. Any work authorized by this approval must proceed in accordance with the plans kept on file with the City. This electronic approval may not be edited once issued. Any modification to this approval once issued will invalidate this approval.

City of Raleigh Development Approval _____

Raleigh Water Review Officer

LONGSPUR LN. - PLAN
SCALE: 1"=40'
STA: 0+00 - 10+00

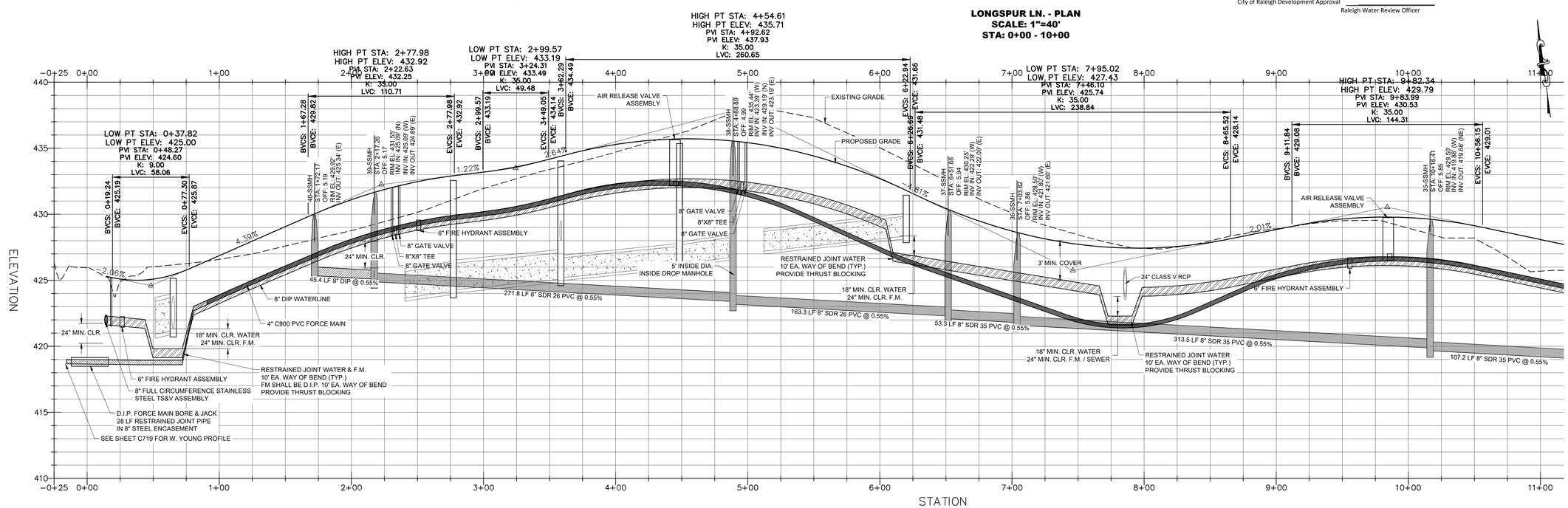

LONGSPUR LN.- PROFILE
HOR. SCALE: 1"=40' VER. SCALE: 1"=4'
STA: 0+00 - 10+00

Line Table: Alignments

Line #	Length	Direction	Start Point	End Point
L6	183.49	S84° 21' 44.46"E	0+01.23	1+84.72
L7	400.01	S89° 34' 13.59"E	2+30.17	6+30.18
L8	272.70	N68° 27' 43.24"E	7+24.11	9+96.81
L9	35.25	N8° 24' 45.43"E	12+85.03	13+20.27

Curve Table: Alignments

Curve #	Radius	Length	Chord Direction	Start Point	End Point
C4	500.00	45.45	S86° 57' 59.02"E	1+84.72	2+30.17
C5	245.00	93.93	N79° 26' 44.83"E	6+30.18	7+24.11
C6	275.00	288.22	N38° 26' 14.33"E	9+96.81	12+85.03

REV	DESCRIPTION	DATE
03	CONSTRUCTION DOCUMENTS 3rd SUBMITTAL	06/17/2020
02	CONSTRUCTION DOCUMENTS 2nd SUBMITTAL	04/15/2020
01	CONSTRUCTION DOCUMENTS 1st SUBMITTAL	01/13/2020

REVISIONS

P:\2017 Projects\170347 Chandlers Ridge\Eng\CAD\DWG\TP SHEET\P_170347_C700_ROAD.dwg

NORTH CAROLINA PROFESSIONAL SEAL 20234 ENGINEER THOMAS S. SPOCHT, JR.

Bateman Civil Survey Company
Engineers ● Surveyors ● Planners
2524 Reliance Avenue, Apex, North Carolina 27539
Phone: 919.577.1080 Fax: 919.577.1081
NCBELS FIRM No. C-2378

CHANDLER'S RIDGE
CONSTRUCTION DOCUMENTS
CONSERVATION SUBDIVISION
410 W. YOUNG ST.
ROLESVILLE, NC
WAKE COUNTY

LONGSPUR LN.
PLAN & PROFILE

Project Engineer:	TSS
Designed By:	TEP
Drawn By:	TEP
Checked By:	TSS
Scale:	1" = 40'
Date:	06/17/2020
Project Number:	P170347

SHEET
C703

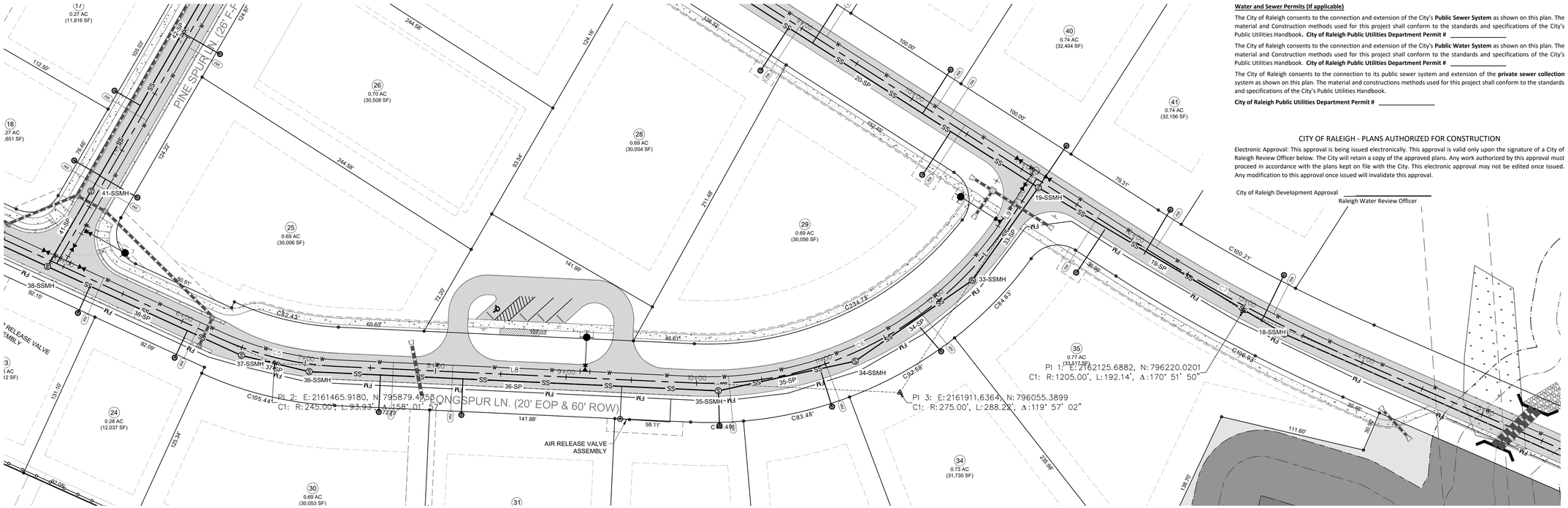

LONGSPUR LN. - PLAN
SCALE: 1"=40'
STA: 10+00 - 13+20

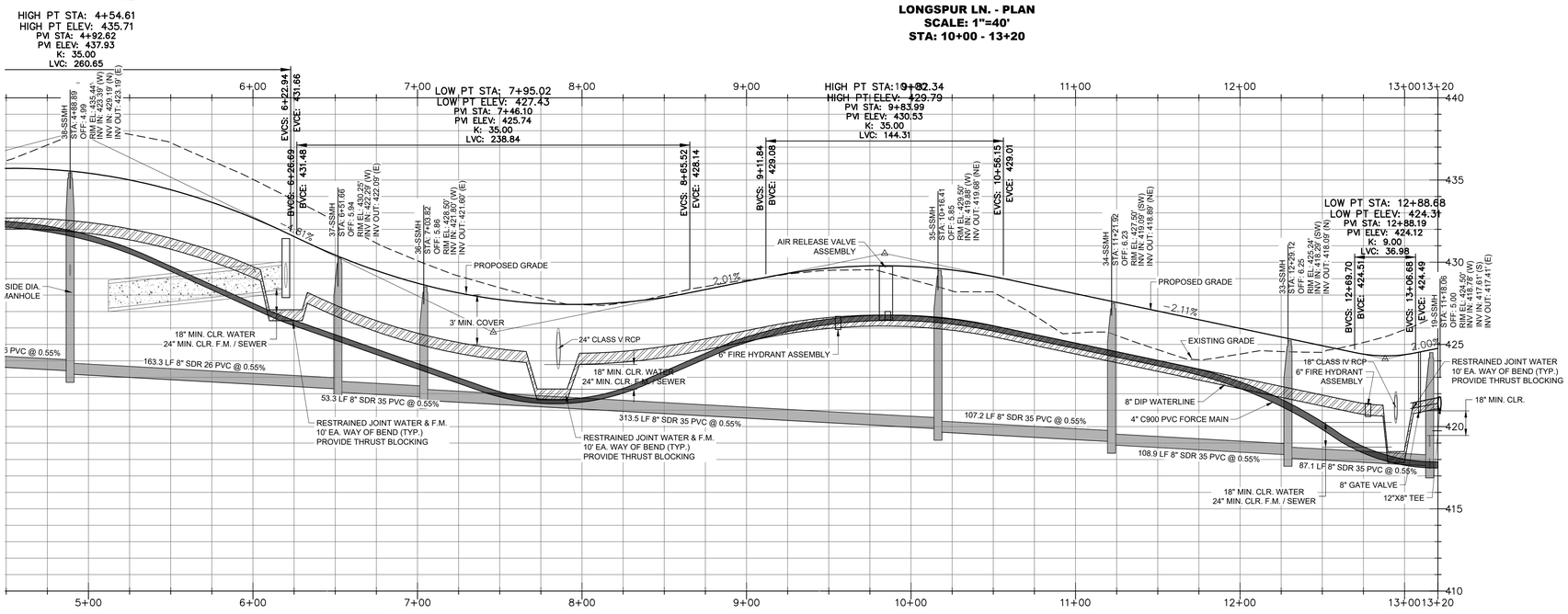

LONGSPUR LN. - PROFILE
HOR. SCALE: 1"=40' VER. SCALE: 1"=4'
STA: 10+00 - 13+20

Line Table: Alignments				
Line #	Length	Direction	Start Point	End Point
L6	183.49	S84° 21' 44.46"E	0+01.23	1+84.72
L7	400.01	S89° 34' 13.59"E	2+30.17	6+30.18
L8	272.70	N68° 27' 43.24"E	7+24.11	9+96.81
L9	35.25	N8° 24' 45.43"E	12+85.03	13+20.27

Curve Table: Alignments					
Curve #	Radius	Length	Chord Direction	Start Point	End Point
C4	500.00	45.45	S86° 57' 59.02"E	1+84.72	2+30.17
C5	245.00	93.93	N79° 26' 44.83"E	6+30.18	7+24.11
C6	275.00	288.22	N38° 26' 14.33"E	9+96.81	12+85.03

REV	DESCRIPTION	DATE
03	CONSTRUCTION DOCUMENTS 3rd SUBMITTAL	06/17/2020
02	CONSTRUCTION DOCUMENTS 2nd SUBMITTAL	04/15/2020
01	CONSTRUCTION DOCUMENTS 1st SUBMITTAL	01/13/2020

REVISIONS

P:\2017 Projects\170347 Chandlers Ridge\Eng\CAD\DWG\TP SHEET\P_170347_C700_ROAD.dwg

SITE PERMITTING APPROVAL

Water and Sewer Permits (If applicable)

The City of Raleigh consents to the connection and extension of the City's **Public Sewer System** as shown on this plan. The material and Construction methods used for this project shall conform to the standards and specifications of the City's Public Utilities Handbook. **City of Raleigh Public Utilities Department Permit #** _____

The City of Raleigh consents to the connection and extension of the City's **Public Water System** as shown on this plan. The material and Construction methods used for this project shall conform to the standards and specifications of the City's Public Utilities Handbook. **City of Raleigh Public Utilities Department Permit #** _____

The City of Raleigh consents to the connection to its public sewer system and extension of the **private sewer collection** system as shown on this plan. The material and constructions methods used for this project shall conform to the standards and specifications of the City's Public Utilities Handbook.

City of Raleigh Public Utilities Department Permit # _____

CITY OF RALEIGH - PLANS AUTHORIZED FOR CONSTRUCTION

Electronic Approval: This approval is being issued electronically. This approval is valid only upon the signature of a City of Raleigh Review Officer below. The City will retain a copy of the approved plans. Any work authorized by this approval must proceed in accordance with the plans kept on file with the City. This electronic approval may not be edited once issued. Any modification to this approval once issued will invalidate this approval.

City of Raleigh Development Approval _____
Raleigh Water Review Officer

NORTH CAROLINA PROFESSIONAL SEAL 20234 ENGINEER THOMAS S. SPOCHT, JR.

Bateman Civil Survey Company
Engineers ● Surveyors ● Planners
2524 Reliance Avenue, Apex, North Carolina 27539
Phone: 919.577.1080 Fax: 919.577.1081
NCBELS FIRM No. C-2378

CHANDLER'S RIDGE
CONSTRUCTION DOCUMENTS
CONSERVATION SUBDIVISION
410 W. YOUNG ST.
ROLESVILLE, NC
WAKE COUNTY

LONGSPUR LN. PLAN & PROFILE

Project Engineer:	TSS
Designed By:	TEP
Drawn By:	TEP
Checked By:	TSS
Scale:	1" = 40'
Date:	06/17/2020
Project Number:	P170347

SHEET
C704

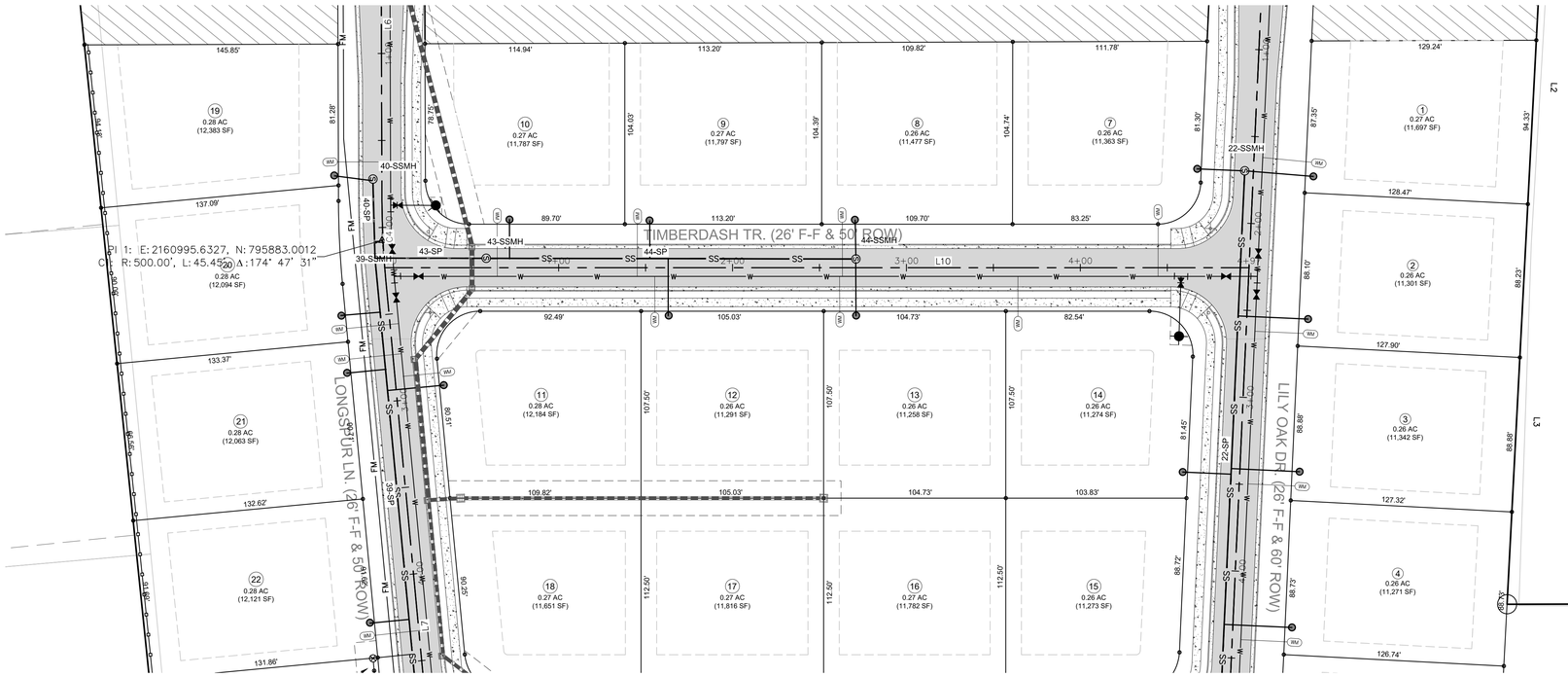

TIMBERDASH TR. - PLAN
SCALE: 1"=40'
STA:00+00 - 4+97

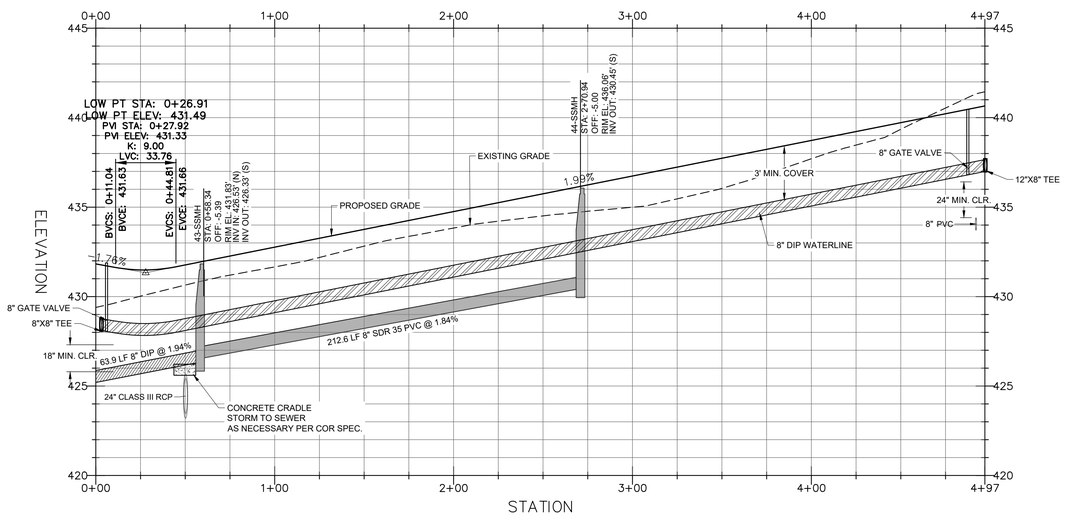

TIMBERDASH TR. - PROFILE
HOR. SCALE: 1"=40' VER. SCALE: 1"=4'
STA: 0+00 - 4+97

SITE PERMITTING APPROVAL

Water and Sewer Permits (If applicable)

The City of Raleigh consents to the connection and extension of the City's **Public Sewer System** as shown on this plan. The material and Construction methods used for this project shall conform to the standards and specifications of the City's Public Utilities Handbook. **City of Raleigh Public Utilities Department Permit #** _____

The City of Raleigh consents to the connection and extension of the City's **Public Water System** as shown on this plan. The material and Construction methods used for this project shall conform to the standards and specifications of the City's Public Utilities Handbook. **City of Raleigh Public Utilities Department Permit #** _____

The City of Raleigh consents to the connection to its public sewer system and extension of the **private sewer collection** system as shown on this plan. The material and constructions methods used for this project shall conform to the standards and specifications of the City's Public Utilities Handbook.

City of Raleigh Public Utilities Department Permit # _____

CITY OF RALEIGH - PLANS AUTHORIZED FOR CONSTRUCTION

Electronic Approval: This approval is being issued electronically. This approval is valid only upon the signature of a City of Raleigh Review Officer below. The City will retain a copy of the approved plans. Any work authorized by this approval must proceed in accordance with the plans kept on file with the City. This electronic approval may not be edited once issued. Any modification to this approval once issued will invalidate this approval.

City of Raleigh Development Approval _____
Raleigh Water Review Officer

Line Table: Alignments

Line #	Length	Direction	Start Point	End Point
L10	497.00	N5° 49' 00.97"E	0+00.00	4+97.00

REV	DESCRIPTION	DATE
03	CONSTRUCTION DOCUMENTS 3rd SUBMITTAL	06/17/2020
02	CONSTRUCTION DOCUMENTS 2nd SUBMITTAL	04/15/2020
01	CONSTRUCTION DOCUMENTS 1st SUBMITTAL	01/13/2020

REVISIONS

P:\2017 Projects\170347 Chandlers Ridge\Eng\CAD\DWG\TP SHEET\P_170347_C700_ROAD.dwg

NORTH CAROLINA PROFESSIONAL SEAL 20234 ENGINEER THOMAS S. SPOON, JR.

Bateman Civil Survey Company
Engineers ● Surveyors ● Planners
2524 Reliance Avenue, Apex, North Carolina 27539
Phone: 919.577.1080 Fax: 919.577.1081
NCBELS FIRM No. C-2378

CHANDLER'S RIDGE
CONSTRUCTION DOCUMENTS
CONSERVATION SUBDIVISION
410 W. YOUNG ST.
ROLESVILLE, NC
WAKE COUNTY

TIMBERDASH TR.
PLAN & PROFILE

Project Engineer:	TSS
Designed By:	TEP
Drawn By:	TEP
Checked By:	TSS
Scale:	1" = 40'
Date:	06/17/2020
Project Number:	P170347

SHEET
C705

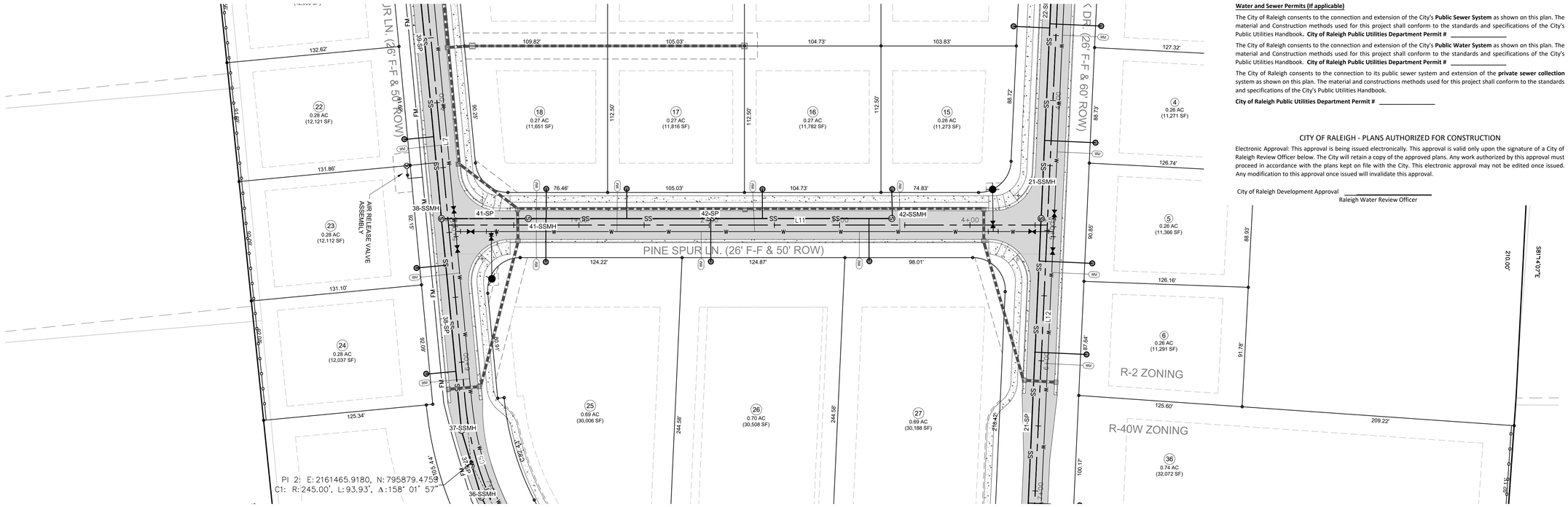

PINE SPUR LN. - PLAN
SCALE: 1"=40'
STA:00+00 - 4+59

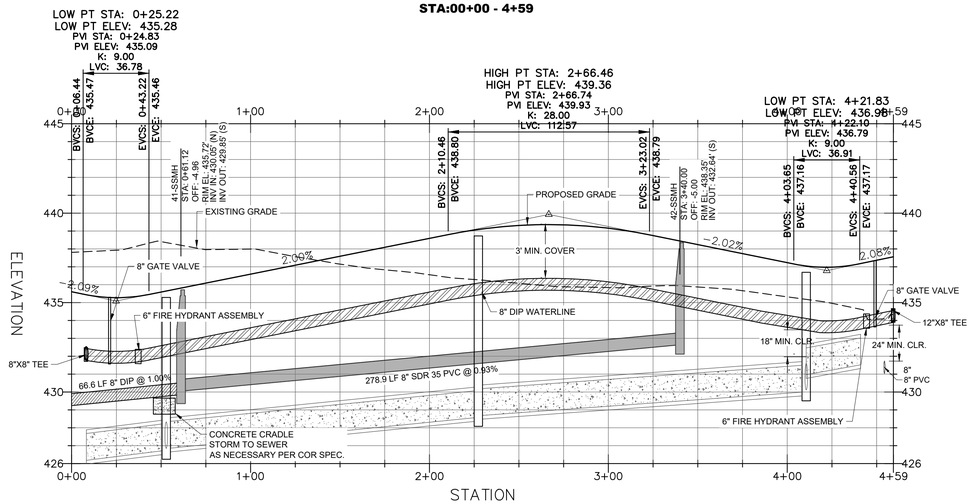

PINE SPUR LN. - PROFILE
HOR. SCALE: 1"=40' VER. SCALE: 1"=4'
STA: 0+00 - 4+59

SITE PERMITTING APPROVAL

Water and Sewer Permits (If applicable)

The City of Raleigh consents to the connection and extension of the City's **Public Sewer System** as shown on this plan. The material and Construction methods used for this project shall conform to the standards and specifications of the City's Public Utilities Handbook. **City of Raleigh Public Utilities Department Permit #** _____

The City of Raleigh consents to the connection and extension of the City's **Public Water System** as shown on this plan. The material and Construction methods used for this project shall conform to the standards and specifications of the City's Public Utilities Handbook. **City of Raleigh Public Utilities Department Permit #** _____

The City of Raleigh consents to the connection to its public sewer system and extension of the **private sewer collection** system as shown on this plan. The material and constructions methods used for this project shall conform to the standards and specifications of the City's Public Utilities Handbook.

City of Raleigh Public Utilities Department Permit # _____

CITY OF RALEIGH - PLANS AUTHORIZED FOR CONSTRUCTION

Electronic Approval: This approval is being issued electronically. This approval is valid only upon the signature of a City of Raleigh Review Officer below. The City will retain a copy of the approved plans. Any work authorized by this approval must proceed in accordance with the plans kept on file with the City. This electronic approval may not be edited once issued. Any modification to this approval once issued will invalidate this approval.

City of Raleigh Development Approval _____
Raleigh Water Review Officer

Line Table: Alignments				
Line #	Length	Direction	Start Point	End Point
L11	459.35	N5° 49' 00.97"E	0+00.00	4+59.35

REV	DESCRIPTION	DATE
03	CONSTRUCTION DOCUMENTS 3rd SUBMITTAL	06/17/2020
02	CONSTRUCTION DOCUMENTS 2nd SUBMITTAL	04/15/2020
01	CONSTRUCTION DOCUMENTS 1st SUBMITTAL	01/13/2020

REVISIONS

P:\2017 Projects\170347 Chandlers Ridge\Eng\CAD\DWG\TP SHEET\P_170347_C700_ROAD.dwg

NORTH CAROLINA PROFESSIONAL SEAL 20234 ENGINEER THOMAS S. SPOKONY, JR.

Bateman Civil Survey Company
Engineers ● Surveyors ● Planners
2524 Reliance Avenue, Apex, North Carolina 27539
Phone: 919.577.1080 Fax: 919.577.1081
NCBELS FIRM No. C-2378

CHANDLER'S RIDGE
CONSTRUCTION DOCUMENTS
CONSERVATION SUBDIVISION
410 W. YOUNG ST.
ROLESVILLE, NC
WAKE COUNTY

PINE SPUR LN.
PLAN & PROFILE

Project Engineer:	TSS
Designed By:	TEP
Drawn By:	TEP
Checked By:	TSS
Scale:	1" = 40'
Date:	06/17/2020
Project Number:	P170347

SHEET
C706

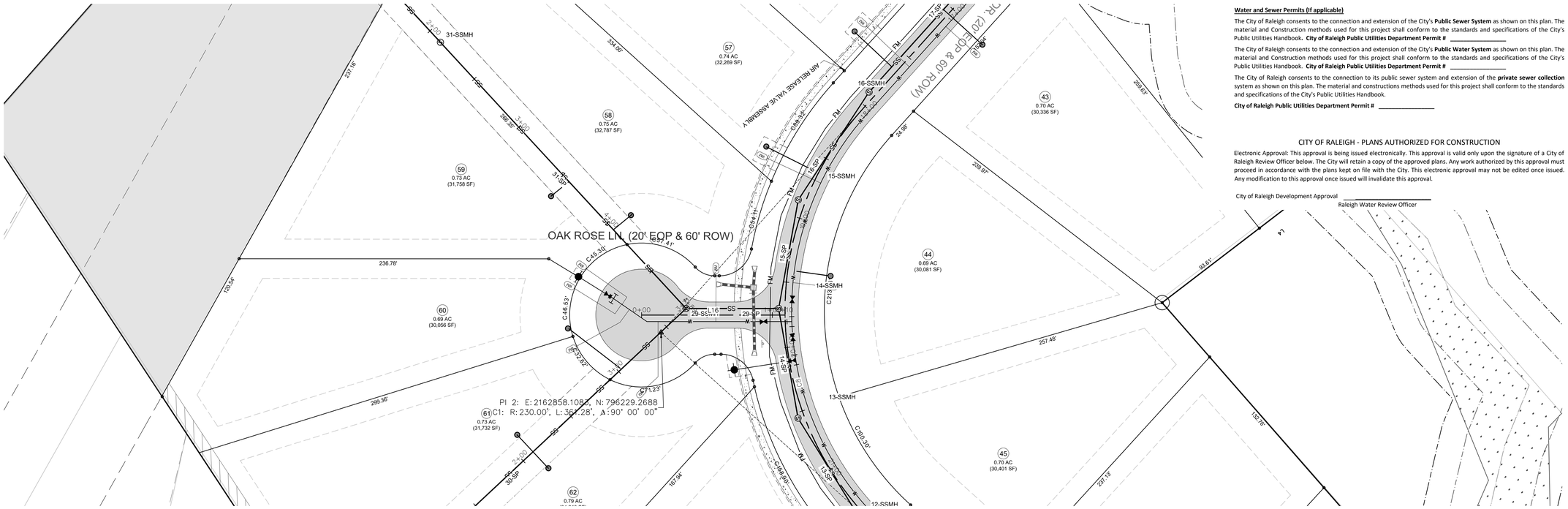

OAK ROSE LN. - PLAN
SCALE: 1"=40'
STA:00+00 - 1+10

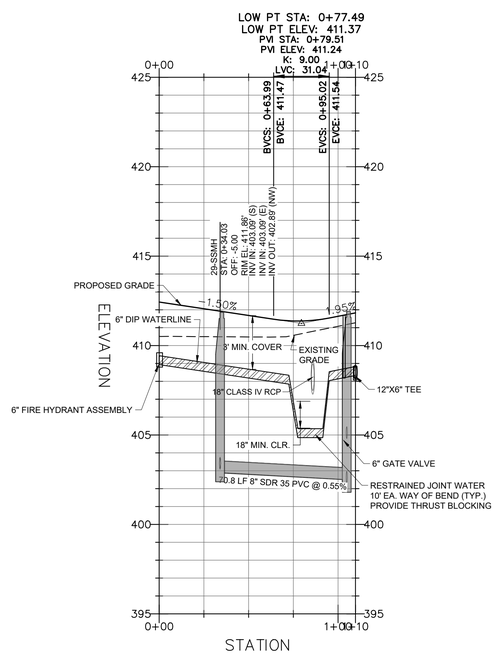

OAK ROSE LN. - PROFILE
HOR. SCALE: 1"=40' VER. SCALE: 1"=4'
STA: 0+00 - 1+10

SITE PERMITTING APPROVAL

Water and Sewer Permits (If applicable)

The City of Raleigh consents to the connection and extension of the City's **Public Sewer System** as shown on this plan. The material and Construction methods used for this project shall conform to the standards and specifications of the City's Public Utilities Handbook. **City of Raleigh Public Utilities Department Permit #** _____

The City of Raleigh consents to the connection and extension of the City's **Public Water System** as shown on this plan. The material and Construction methods used for this project shall conform to the standards and specifications of the City's Public Utilities Handbook. **City of Raleigh Public Utilities Department Permit #** _____

The City of Raleigh consents to the connection to its public sewer system and extension of the **private sewer collection** system as shown on this plan. The material and constructions methods used for this project shall conform to the standards and specifications of the City's Public Utilities Handbook.

City of Raleigh Public Utilities Department Permit # _____

CITY OF RALEIGH - PLANS AUTHORIZED FOR CONSTRUCTION

Electronic Approval: This approval is being issued electronically. This approval is valid only upon the signature of a City of Raleigh Review Officer below. The City will retain a copy of the approved plans. Any work authorized by this approval must proceed in accordance with the plans kept on file with the City. This electronic approval may not be edited once issued. Any modification to this approval once issued will invalidate this approval.

City of Raleigh Development Approval _____
Raleigh Water Review Officer

Line Table: Alignments				
Line #	Length	Direction	Start Point	End Point
L16	109.71	N42° 46' 21.68"W	0+00.00	1+09.71

REV	DESCRIPTION	DATE
03	CONSTRUCTION DOCUMENTS 3rd SUBMITTAL	06/17/2020
02	CONSTRUCTION DOCUMENTS 2nd SUBMITTAL	04/15/2020
01	CONSTRUCTION DOCUMENTS 1st SUBMITTAL	01/13/2020

REVISIONS

P:\2017 Projects\170347 Chandlers Ridge\Eng\CAD\DWG\TP SHEET\P_170347_C700_ROAD.dwg

NORTH CAROLINA PROFESSIONAL SEAL 20234 ENGINEER THOMAS S. SPOCHT, JR.

Bateman Civil Survey Company
Engineers ● Surveyors ● Planners
2524 Reliance Avenue, Apex, North Carolina 27539
Phone: 919.577.1080 Fax: 919.577.1081
NCBELS FIRM No. C-2378

CHANDLER'S RIDGE
CONSTRUCTION DOCUMENTS
CONSERVATION SUBDIVISION

410 W. YOUNG ST.
ROLESVILLE, NC
WAKE COUNTY

OAK ROSE LN.
PLAN & PROFILE

Project Engineer:	TSS
Designed By:	TEP
Drawn By:	TEP
Checked By:	TSS
Scale:	1" = 40'
Date:	06/17/2020
Project Number:	P170347

SHEET
C707

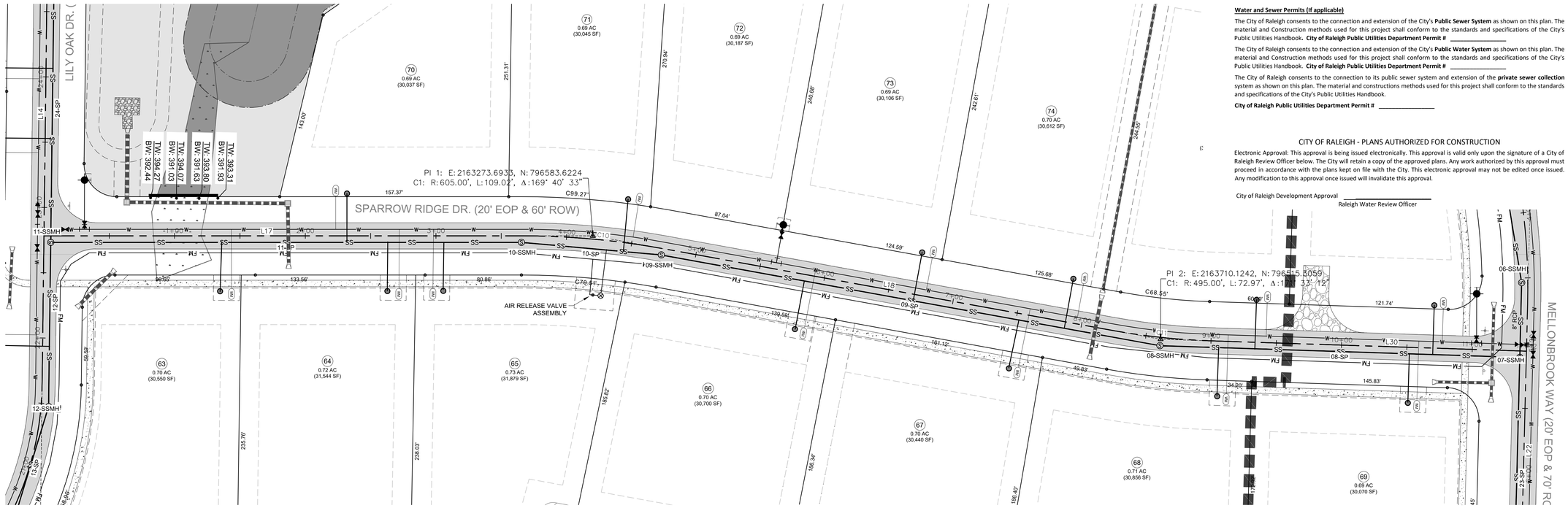

SITE PERMITTING APPROVAL

Water and Sewer Permits (If applicable)

The City of Raleigh consents to the connection and extension of the City's **Public Sewer System** as shown on this plan. The material and Construction methods used for this project shall conform to the standards and specifications of the City's Public Utilities Handbook. **City of Raleigh Public Utilities Department Permit #** _____

The City of Raleigh consents to the connection and extension of the City's **Public Water System** as shown on this plan. The material and Construction methods used for this project shall conform to the standards and specifications of the City's Public Utilities Handbook. **City of Raleigh Public Utilities Department Permit #** _____

The City of Raleigh consents to the connection to its public sewer system and extension of the **private sewer collection** system as shown on this plan. The material and constructions methods used for this project shall conform to the standards and specifications of the City's Public Utilities Handbook.

City of Raleigh Public Utilities Department Permit # _____

CITY OF RALEIGH - PLANS AUTHORIZED FOR CONSTRUCTION

Electronic Approval: This approval is being issued electronically. This approval is valid only upon the signature of a City of Raleigh Review Officer below. The City will retain a copy of the approved plans. Any work authorized by this approval must proceed in accordance with the plans kept on file with the City. This electronic approval may not be edited once issued. Any modification to this approval once issued will invalidate this approval.

City of Raleigh Development Approval _____
Raleigh Water Review Officer

SPARROW RIDGE DR. - PLAN
SCALE: 1"=40'
STA:00+00 - 11+00

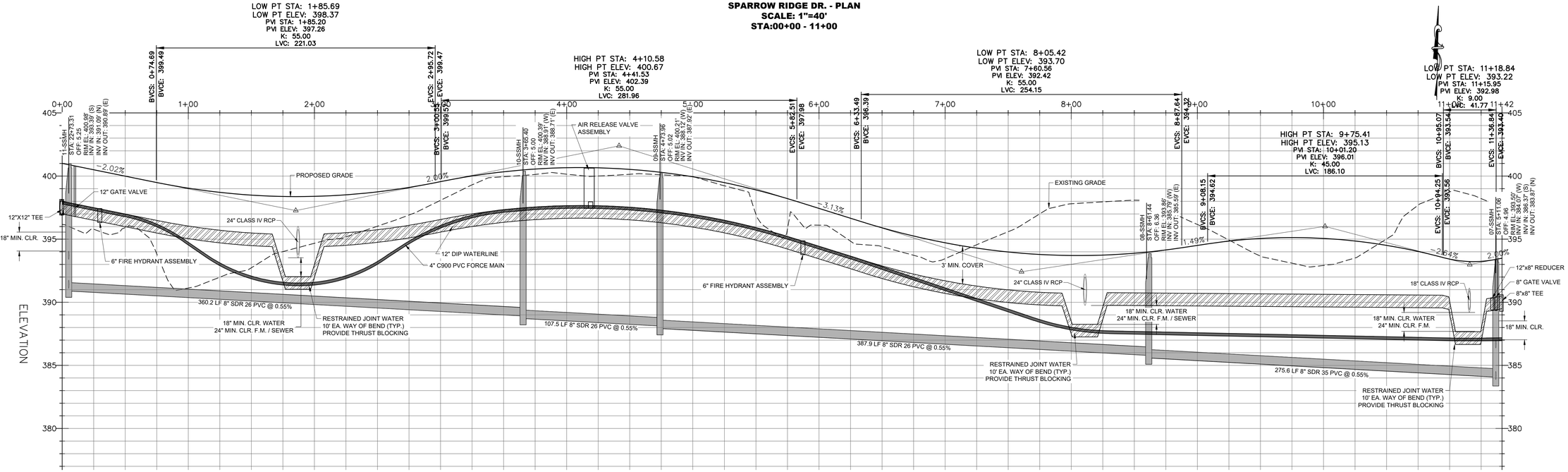

SPARROW RIDGE DR. - PROFILE
HOR. SCALE: 1"=40' VER. SCALE: 1"=4'
STA: 0+00 - 11+00

Line Table: Alignments				
Line #	Length	Direction	Start Point	End Point
L17	365.40	N88° 34' 20.15"E	0+00.00	3+65.40
L18	350.54	S81° 06' 12.36"E	4+74.42	8+24.95
L30	243.60	S89° 32' 59.98"E	8+97.93	11+41.53

Curve Table: Alignments					
Curve #	Radius	Length	Chord Direction	Start Point	End Point
C10	605.00	109.02	S86° 15' 56.11"E	3+65.40	4+74.42
C11	495.00	72.97	S85° 19' 36.17"E	8+24.95	8+97.93

REV	DESCRIPTION	DATE
03	CONSTRUCTION DOCUMENTS 3rd SUBMITTAL	06/17/2020
02	CONSTRUCTION DOCUMENTS 2nd SUBMITTAL	04/15/2020
01	CONSTRUCTION DOCUMENTS 1st SUBMITTAL	01/13/2020

REVISIONS

P:\2017 Projects\170347 Chandlers Ridge\Eng\CAD\DWG\TP SHEET\P_170347_C700_ROAD.dwg

NORTH CAROLINA PROFESSIONAL SEAL 20234 ENGINEER THOMAS S. SPOSITO, JR.

Bateman Civil Survey Company
Engineers ● Surveyors ● Planners
2524 Reliance Avenue, Apex, North Carolina 27539
Phone: 919.577.1080 Fax: 919.577.1081
NCBELS FIRM No. C-2378

CHANDLER'S RIDGE
CONSTRUCTION DOCUMENTS
CONSERVATION SUBDIVISION
410 W. YOUNG ST.
ROLESVILLE, NC
WAKE COUNTY

SPARROW RIDGE DR.
PLAN & PROFILE

Project Engineer:	TSS
Designed By:	TEP
Drawn By:	TEP
Checked By:	TSS
Scale:	1" = 40'
Date:	06/17/2020
Project Number:	P170347

SHEET
C708