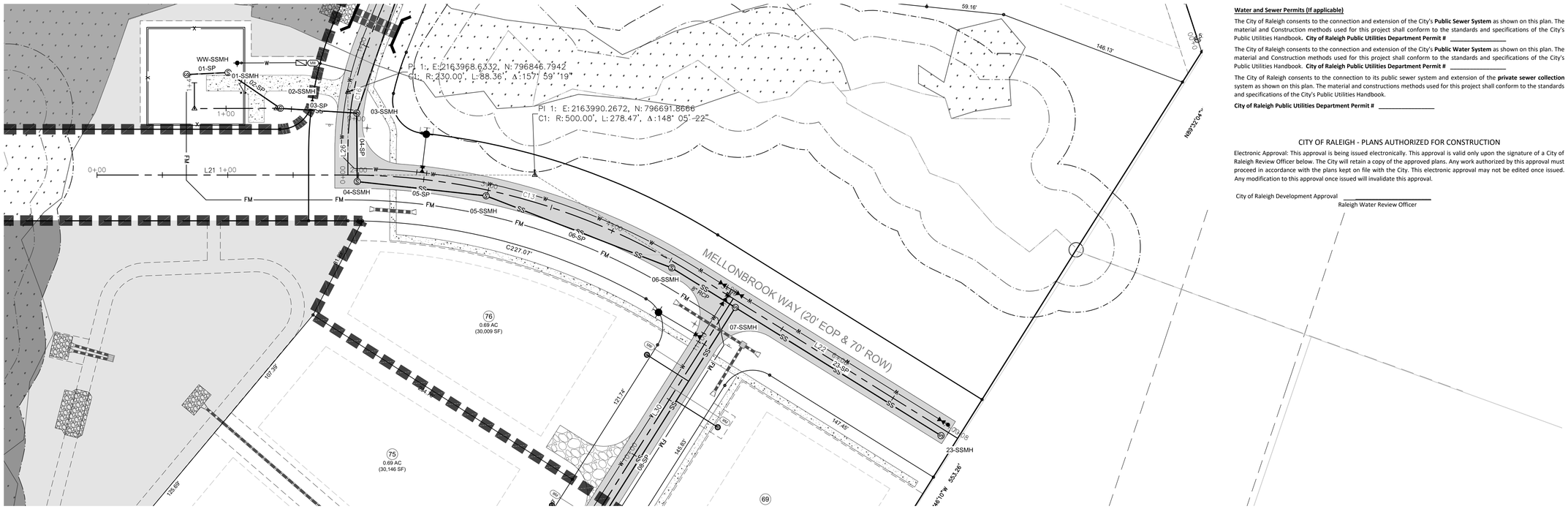

MELLONBROOK WAY - PLAN
SCALE: 1"=40'
STA: 0+00 - 7+08

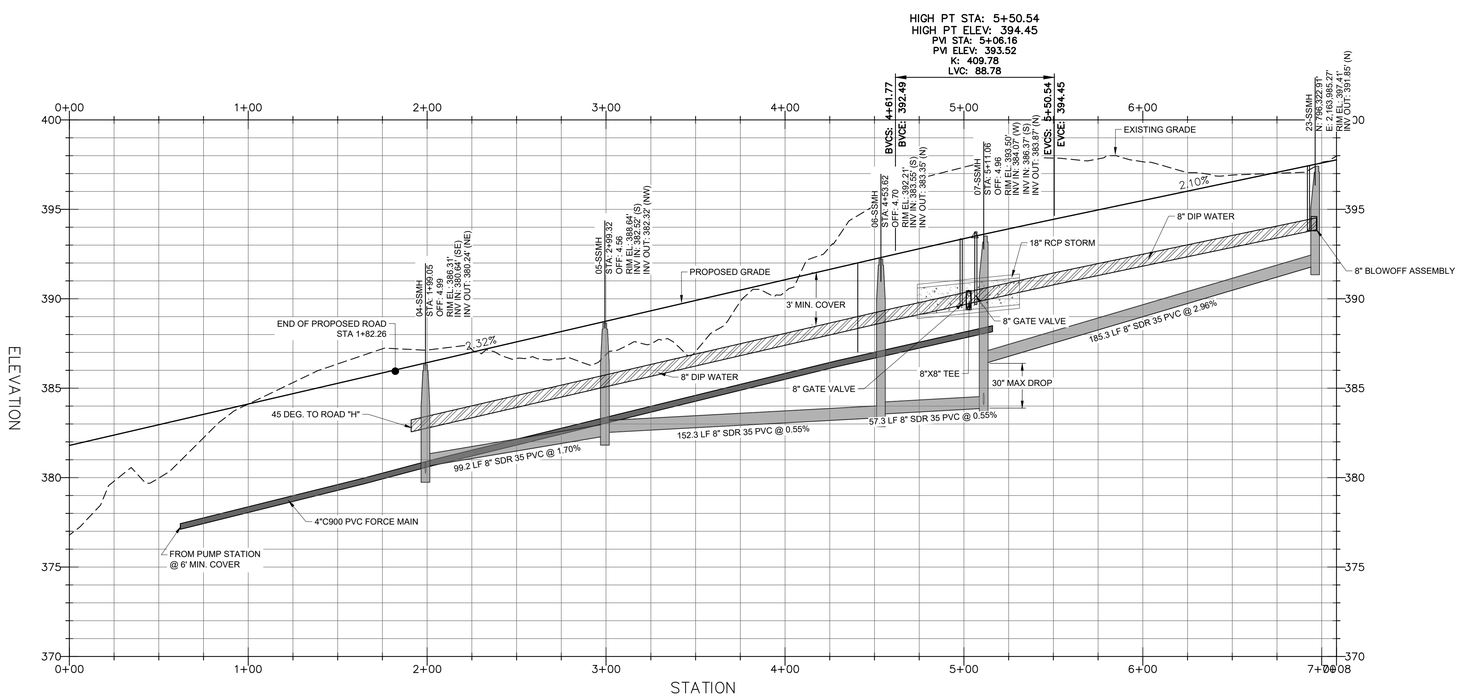

MELLONBROOK WAY - PROFILE
HOR. SCALE: 1"=40' VER. SCALE: 1"=4'
STA: 0+00 - 7+08

Line Table: Alignments				
Line #	Length	Direction	Start Point	End Point
L22	237.94	S0° 00' 00.00"E	4+70.34	7+08.28
L21	191.87	S31° 54' 37.54"E	0+00.00	1+91.87

Curve Table: Alignments					
Curve #	Radius	Length	Chord Direction	Start Point	End Point
C13	500.00	278.47	S15° 57' 18.77"E	1+91.87	4+70.34

SITE PERMITTING APPROVAL

Water and Sewer Permits (If applicable)

The City of Raleigh consents to the connection and extension of the City's **Public Sewer System** as shown on this plan. The material and Construction methods used for this project shall conform to the standards and specifications of the City's Public Utilities Handbook. **City of Raleigh Public Utilities Department Permit #** _____

The City of Raleigh consents to the connection and extension of the City's **Public Water System** as shown on this plan. The material and Construction methods used for this project shall conform to the standards and specifications of the City's Public Utilities Handbook. **City of Raleigh Public Utilities Department Permit #** _____

The City of Raleigh consents to the connection to its public sewer system and extension of the **private sewer collection** system as shown on this plan. The material and constructions methods used for this project shall conform to the standards and specifications of the City's Public Utilities Handbook.

City of Raleigh Public Utilities Department Permit # _____

CITY OF RALEIGH - PLANS AUTHORIZED FOR CONSTRUCTION

Electronic Approval: This approval is being issued electronically. This approval is valid only upon the signature of a City of Raleigh Review Officer below. The City will retain a copy of the approved plans. Any work authorized by this approval must proceed in accordance with the plans kept on file with the City. This electronic approval may not be edited once issued. Any modification to this approval once issued will invalidate this approval.

City of Raleigh Development Approval _____
Raleigh Water Review Officer

NORTH CAROLINA PROFESSIONAL SEAL 20234 ENGINEER THOMAS S. SPOCHT, JR.

Bateman Civil Survey Company
Engineers • Surveyors • Planners
2524 Reliance Avenue, Apex, North Carolina 27539
Phone: 919.577.1080 Fax: 919.577.1081
NCBELS FIRM No. C-2378

CHANDLER'S RIDGE
CONSTRUCTION DOCUMENTS
CONSERVATION SUBDIVISION
410 W. YOUNG ST.
ROLESVILLE, NC
WAKE COUNTY

MELLONBROOK WAY PLAN & PROFILE

Project Engineer:	TSS
Designed By:	TEP
Drawn By:	TEP
Checked By:	TSS
Scale:	1" = 40'
Date:	06/17/2020
Project Number:	P170347

SHEET
C709

REV	DESCRIPTION	DATE
03	CONSTRUCTION DOCUMENTS 3rd SUBMITTAL	06/17/2020
02	CONSTRUCTION DOCUMENTS 2nd SUBMITTAL	04/15/2020
01	CONSTRUCTION DOCUMENTS 1st SUBMITTAL	01/13/2020

REVISIONS

P:\2017 Projects\170347 Chandlers Ridge\Eng\CAD\DWG\TP SHEET\P_170347_C700_ROAD.dwg

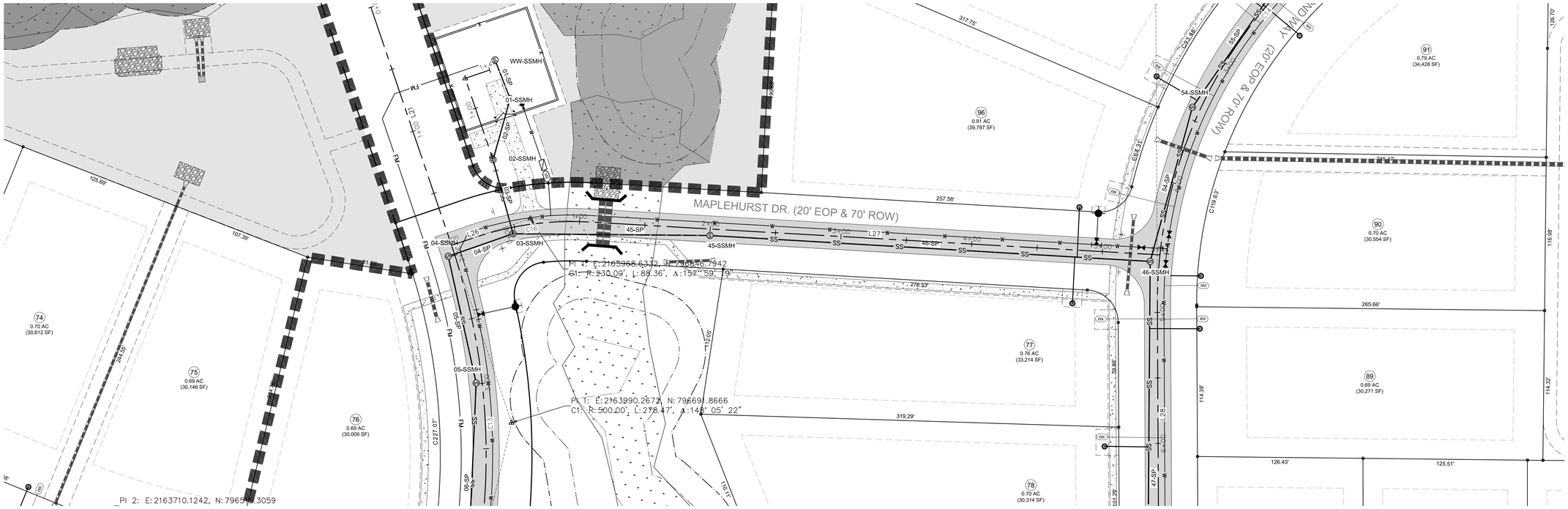

MAPLEHURST DR. - PLAN
SCALE: 1"=40'
STA: 0+00 - 5+44

Curve Table: Alignments					
Curve #	Radius	Length	Chord Direction	Start Point	End Point
C16	230.00	88.36	N69° 05' 43.04"E	0+18.80	1+07.16

Line Table: Alignments				
Line #	Length	Direction	Start Point	End Point
L26	18.80	N58° 05' 22.46"E	0+00.00	0+18.80
L27	436.77	N80° 06' 03.61"E	1+07.16	5+43.92

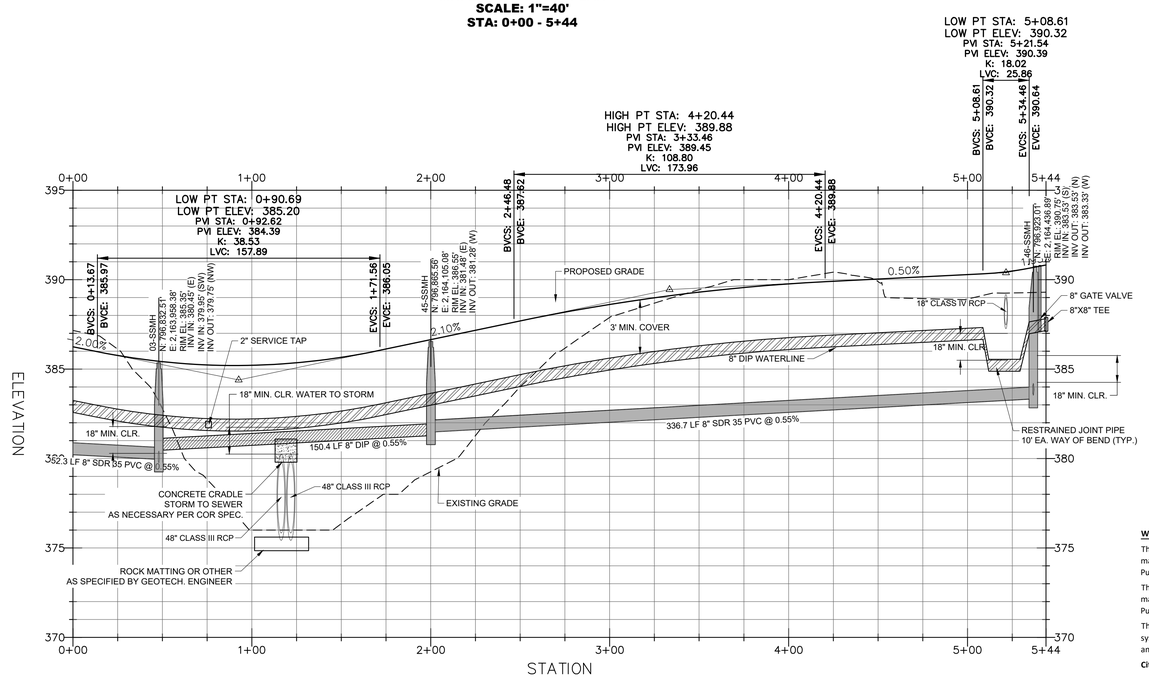

MAPLEHURST DR. - PROFILE
HOR. SCALE: 1"=40' VER. SCALE: 1"=4'
STA: 0+00 - 5+44

SITE PERMITTING APPROVAL

Water and Sewer Permits (If applicable)

The City of Raleigh consents to the connection and extension of the City's **Public Sewer System** as shown on this plan. The material and Construction methods used for this project shall conform to the standards and specifications of the City's Public Utilities Handbook. **City of Raleigh Public Utilities Department Permit #** _____

The City of Raleigh consents to the connection and extension of the City's **Public Water System** as shown on this plan. The material and Construction methods used for this project shall conform to the standards and specifications of the City's Public Utilities Handbook. **City of Raleigh Public Utilities Department Permit #** _____

The City of Raleigh consents to the connection to its public sewer system and extension of the **private sewer collection** system as shown on this plan. The material and constructions methods used for this project shall conform to the standards and specifications of the City's Public Utilities Handbook.

City of Raleigh Public Utilities Department Permit # _____

CITY OF RALEIGH - PLANS AUTHORIZED FOR CONSTRUCTION

Electronic Approval: This approval is being issued electronically. This approval is valid only upon the signature of a City of Raleigh Review Officer below. The City will retain a copy of the approved plans. Any work authorized by this approval must proceed in accordance with the plans kept on file with the City. This electronic approval may not be edited once issued. Any modification to this approval once issued will invalidate this approval.

City of Raleigh Development Approval _____
Raleigh Water Review Officer

REV	DESCRIPTION	DATE
03	CONSTRUCTION DOCUMENTS 3rd SUBMITTAL	06/17/2020
02	CONSTRUCTION DOCUMENTS 2nd SUBMITTAL	04/15/2020
01	CONSTRUCTION DOCUMENTS 1st SUBMITTAL	01/13/2020

REVISIONS

P:\2017 Projects\170347 Chandlers Ridge\Eng\CAD\DWG\TP SHEET\P_170347_C700_ROAD.dwg

NORTH CAROLINA PROFESSIONAL SEAL 20234 ENGINEER THOMAS S. SPOON, JR.

Bateman Civil Survey Company
Engineers • Surveyors • Planners
2524 Reliance Avenue, Apex, North Carolina 27539
Phone: 919.577.1080 Fax: 919.577.1081
NCBELS FIRM No. C-2378

CHANDLER'S RIDGE
CONSTRUCTION DOCUMENTS
CONSERVATION SUBDIVISION

410 W. YOUNG ST.
ROLESVILLE, NC
WAKE COUNTY

MAPLEHURST DR.
PLAN & PROFILE

Project Engineer:	TSS
Designed By:	TEP
Drawn By:	TEP
Checked By:	TSS
Scale:	1" = 40'
Date:	06/17/2020
Project Number:	P170347

SHEET
C710

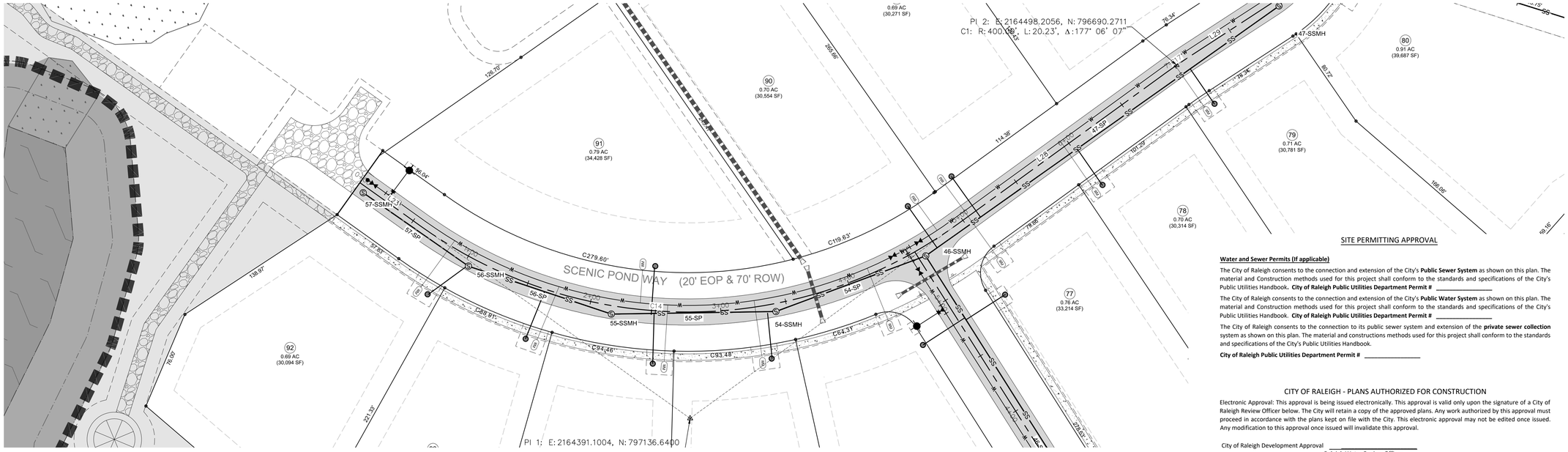

SITE PERMITTING APPROVAL

Water and Sewer Permits (If applicable)

The City of Raleigh consents to the connection and extension of the City's **Public Sewer System** as shown on this plan. The material and Construction methods used for this project shall conform to the standards and specifications of the City's Public Utilities Handbook. **City of Raleigh Public Utilities Department Permit #** _____

The City of Raleigh consents to the connection and extension of the City's **Public Water System** as shown on this plan. The material and Construction methods used for this project shall conform to the standards and specifications of the City's Public Utilities Handbook. **City of Raleigh Public Utilities Department Permit #** _____

The City of Raleigh consents to the connection to its public sewer system and extension of the **private sewer collection** system as shown on this plan. The material and constructions methods used for this project shall conform to the standards and specifications of the City's Public Utilities Handbook.

City of Raleigh Public Utilities Department Permit # _____

CITY OF RALEIGH - PLANS AUTHORIZED FOR CONSTRUCTION

Electronic Approval: This approval is being issued electronically. This approval is valid only upon the signature of a City of Raleigh Review Officer below. The City will retain a copy of the approved plans. Any work authorized by this approval must proceed in accordance with the plans kept on file with the City. This electronic approval may not be edited once issued. Any modification to this approval once issued will invalidate this approval.

City of Raleigh Development Approval _____

Raleigh Water Review Officer

Line Table: Alignments				
Line #	Length	Direction	Start Point	End Point
L25	393.09	N76° 43' 11.74"E	9+33.68	13+26.77
L29	76.34	S10° 35' 41.87"E	7+11.76	7+88.09
L28	197.05	S13° 29' 34.43"E	4+94.48	6+91.52
L23	57.83	S57° 59' 15.62"W	0+00.00	0+57.83

SCENIC POND WAY - PLAN
SCALE: 1"=40'
STA: 0+00 - 9+50

Curve Table: Alignments					
Curve #	Radius	Length	Chord Direction	Start Point	End Point
C14	350.00	436.65	S22° 14' 50.59"W	0+57.83	4+94.48
C17	400.00	20.23	S12° 02' 38.15"E	6+91.52	7+11.76
C15	90.00	145.59	S56° 56' 15.07"E	7+88.09	9+33.68

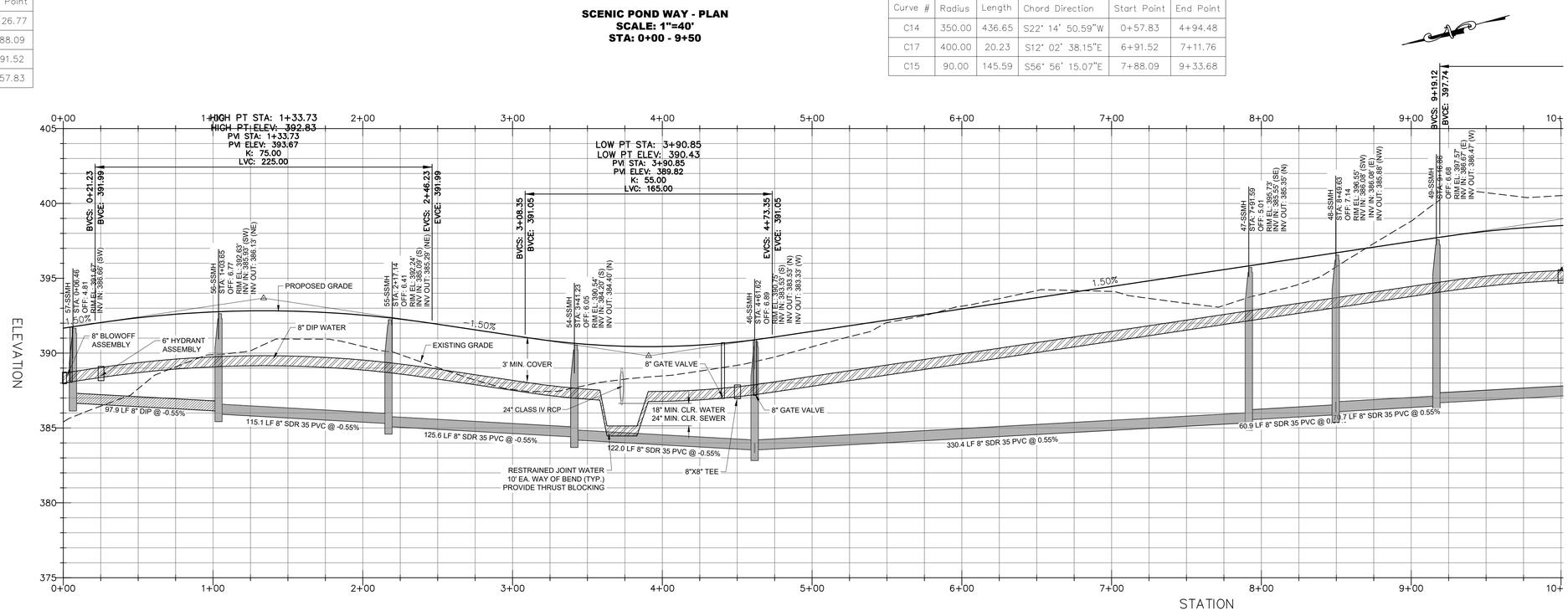

SCENIC POND WAY - PROFILE
HOR. SCALE: 1"=40' VER. SCALE: 1"=4'
STA: 0+00 - 9+50

REV	DESCRIPTION	DATE
03	CONSTRUCTION DOCUMENTS 3rd SUBMITTAL	06/17/2020
02	CONSTRUCTION DOCUMENTS 2nd SUBMITTAL	04/15/2020
01	CONSTRUCTION DOCUMENTS 1st SUBMITTAL	01/13/2020

REVISIONS

P:\2017 Projects\170347 Chandlers Ridge\Eng\CAD\DWG\TP SHEET\P_170347_C700_ROAD.dwg

NORTH CAROLINA PROFESSIONAL SEAL 20234 ENGINEER THOMAS S. SPOKOYNY, JR.

Bateman Civil Survey Company
Engineers ● Surveyors ● Planners
2524 Reliance Avenue, Apex, North Carolina 27539
Phone: 919.577.1080 Fax: 919.577.1081
NCBELS FIRM No. C-2378

CHANDLER'S RIDGE
CONSTRUCTION DOCUMENTS
CONSERVATION SUBDIVISION
410 W. YOUNG ST.
ROLESVILLE, NC
WAKE COUNTY

SCENIC POND WAY PLAN & PROFILE

Project Engineer:	TSS
Designed By:	TEP
Drawn By:	TEP
Checked By:	TSS
Scale:	1" = 40'
Date:	06/17/2020
Project Number:	P170347

SHEET
C711

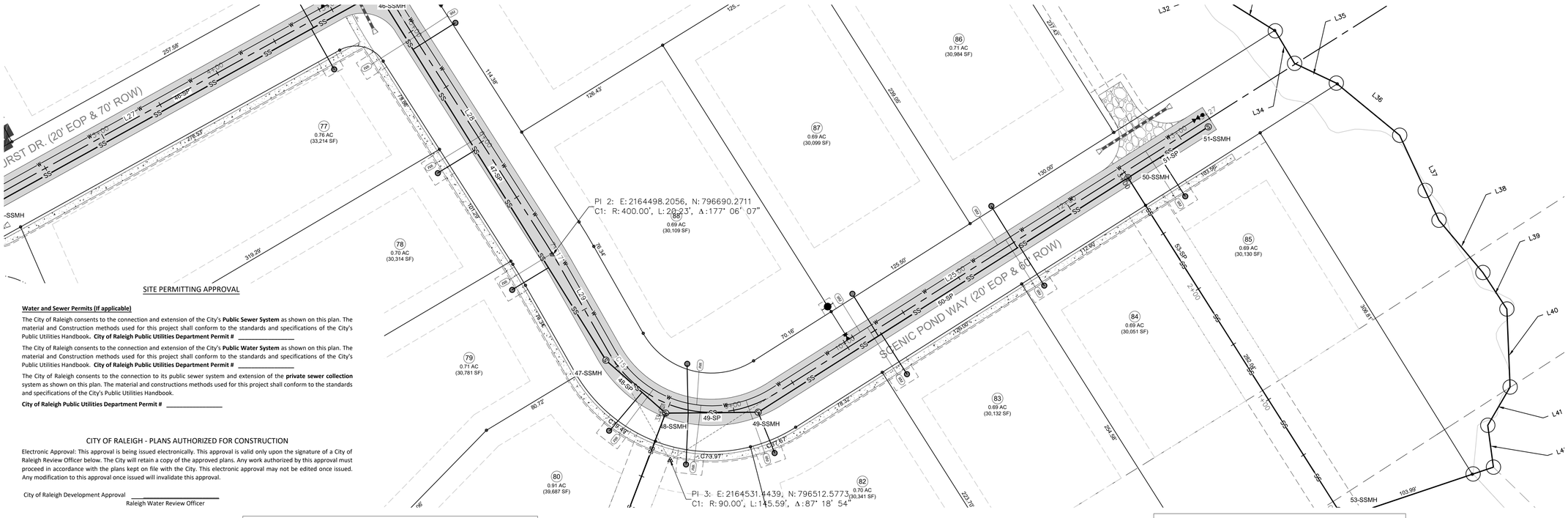

SITE PERMITTING APPROVAL

Water and Sewer Permits (If applicable)

The City of Raleigh consents to the connection and extension of the City's **Public Sewer System** as shown on this plan. The material and Construction methods used for this project shall conform to the standards and specifications of the City's Public Utilities Handbook. **City of Raleigh Public Utilities Department Permit #** _____

The City of Raleigh consents to the connection and extension of the City's **Public Water System** as shown on this plan. The material and Construction methods used for this project shall conform to the standards and specifications of the City's Public Utilities Handbook. **City of Raleigh Public Utilities Department Permit #** _____

The City of Raleigh consents to the connection to its public sewer system and extension of the **private sewer collection** system as shown on this plan. The material and constructions methods used for this project shall conform to the standards and specifications of the City's Public Utilities Handbook.

City of Raleigh Public Utilities Department Permit # _____

CITY OF RALEIGH - PLANS AUTHORIZED FOR CONSTRUCTION

Electronic Approval: This approval is being issued electronically. This approval is valid only upon the signature of a City of Raleigh Review Officer below. The City will retain a copy of the approved plans. Any work authorized by this approval must proceed in accordance with the plans kept on file with the City. This electronic approval may not be edited once issued. Any modification to this approval once issued will invalidate this approval.

City of Raleigh Development Approval _____

Raleigh Water Review Officer

SCENIC POND WAY - PLAN
SCALE: 1"=40'
STA: 9+50 - 13+27

Curve Table: Alignments

Curve #	Radius	Length	Chord Direction	Start Point	End Point
C14	350.00	436.65	S22° 14' 50.59"W	0+57.83	4+94.48
C17	400.00	20.23	S12° 02' 38.15"E	6+91.52	7+11.76
C15	90.00	145.59	S56° 56' 15.07"E	7+88.09	9+33.68

Line Table: Alignments

Line #	Length	Direction	Start Point	End Point
L25	393.09	N76° 43' 11.74"E	9+33.68	13+26.77
L29	76.34	S10° 35' 41.87"E	7+11.76	7+88.09
L28	197.05	S13° 29' 34.43"E	4+94.48	6+91.52
L23	57.83	S57° 59' 15.62"W	0+00.00	0+57.83

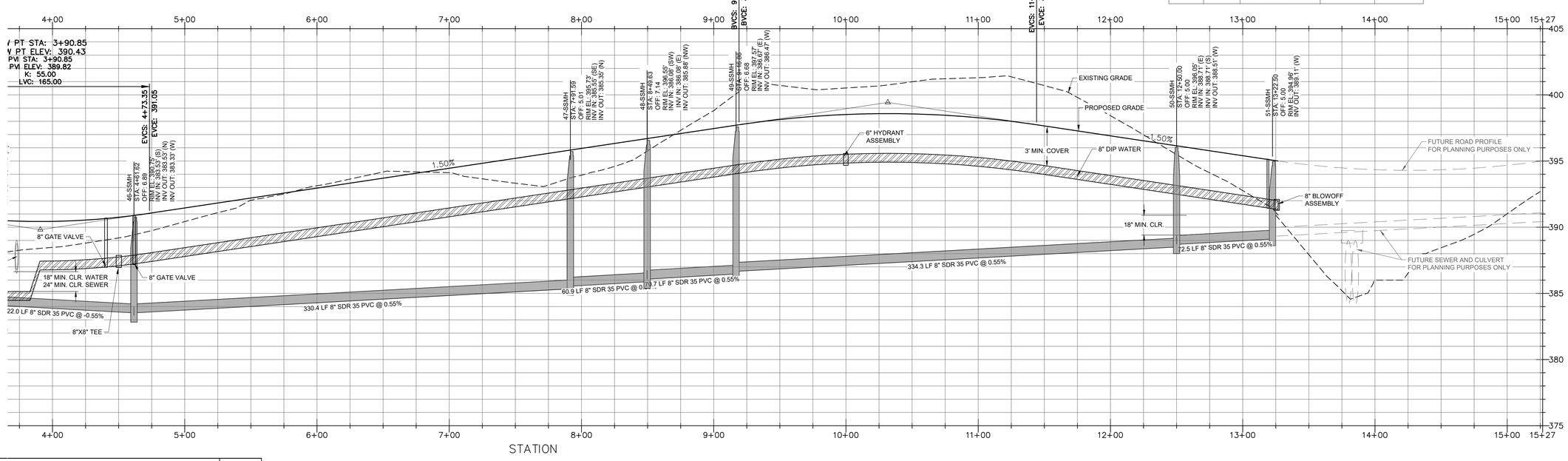

SCENIC POND WAY - PROFILE
HOR. SCALE: 1"=40' VER. SCALE: 1"=4'
STA: 9+50 - 13+27

REV	DESCRIPTION	DATE
03	CONSTRUCTION DOCUMENTS 3rd SUBMITTAL	06/17/2020
02	CONSTRUCTION DOCUMENTS 2nd SUBMITTAL	04/15/2020
01	CONSTRUCTION DOCUMENTS 1st SUBMITTAL	01/13/2020

REVISIONS

Bateman Civil Survey Company
Engineers • Surveyors • Planners
2524 Reliance Avenue, Apex, North Carolina 27539
Phone: 919.577.1080 Fax: 919.577.1081
NCBELS FIRM No. C-2378

CHANDLER'S RIDGE
CONSTRUCTION DOCUMENTS
CONSERVATION SUBDIVISION
410 W. YOUNG ST.
ROLESVILLE, NC
WAKE COUNTY

SCENIC POND WAY
PLAN & PROFILE

Project Engineer:	TSS
Designed By:	TEP
Drawn By:	TEP
Checked By:	TSS
Scale:	1" = 40'
Date:	06/17/2020
Project Number:	P170347

SHEET
C712

P:\2017 Projects\170347 Chandlers Ridge\Eng\CAD\DWG\TP SHEET\P - 170347_C700_ROAD.dwg

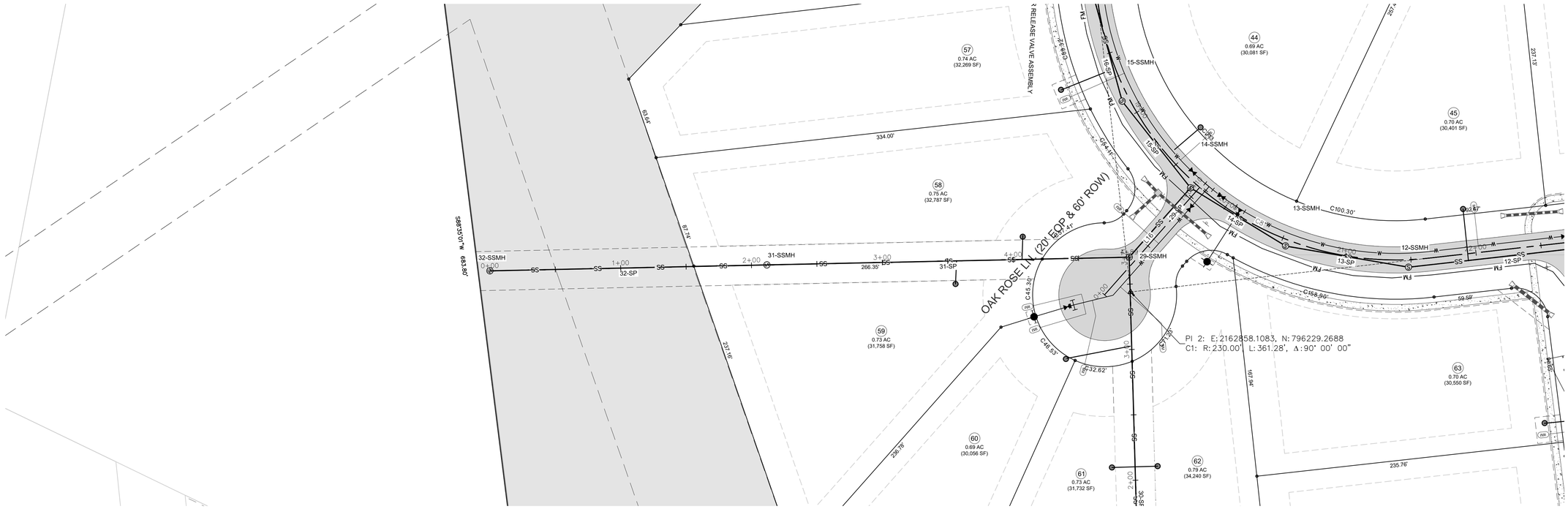

LOT 58 / 59 - PLAN
SCALE: 1"=40'
STA: 0+00 - 4+89

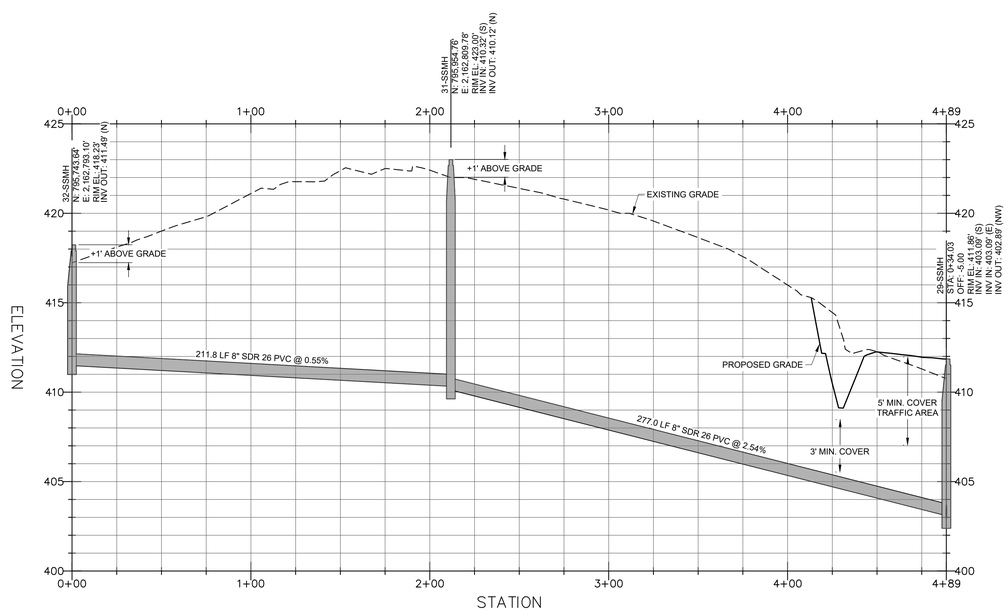

LOT 58 / 59 - PROFILE
HOR. SCALE: 1"=40' VER. SCALE: 1"=4'
STA: 0+00 - 4+89

SITE PERMITTING APPROVAL

Water and Sewer Permits (If applicable)

The City of Raleigh consents to the connection and extension of the City's **Public Sewer System** as shown on this plan. The material and Construction methods used for this project shall conform to the standards and specifications of the City's Public Utilities Handbook. **City of Raleigh Public Utilities Department Permit #** _____

The City of Raleigh consents to the connection and extension of the City's **Public Water System** as shown on this plan. The material and Construction methods used for this project shall conform to the standards and specifications of the City's Public Utilities Handbook. **City of Raleigh Public Utilities Department Permit #** _____

The City of Raleigh consents to the connection to its public sewer system and extension of the **private sewer collection** system as shown on this plan. The material and constructions methods used for this project shall conform to the standards and specifications of the City's Public Utilities Handbook.

City of Raleigh Public Utilities Department Permit # _____

CITY OF RALEIGH - PLANS AUTHORIZED FOR CONSTRUCTION

Electronic Approval: This approval is being issued electronically. This approval is valid only upon the signature of a City of Raleigh Review Officer below. The City will retain a copy of the approved plans. Any work authorized by this approval must proceed in accordance with the plans kept on file with the City. This electronic approval may not be edited once issued. Any modification to this approval once issued will invalidate this approval.

City of Raleigh Development Approval _____
Raleigh Water Review Officer

REV	DESCRIPTION	DATE
03	CONSTRUCTION DOCUMENTS 3rd SUBMITTAL	06/17/2020
02	CONSTRUCTION DOCUMENTS 2nd SUBMITTAL	04/15/2020
01	CONSTRUCTION DOCUMENTS 1st SUBMITTAL	01/13/2020

REVISIONS

P:\2017 Projects\170347 Chandlers Ridge\Eng\CAD\DWG\TP SHEET\P_170347_C700_ROAD.dwg

NORTH CAROLINA PROFESSIONAL SEAL 20234 ENGINEER THOMAS S. SPOCHT, JR.

Bateman Civil Survey Company
Engineers • Surveyors • Planners
2524 Reliance Avenue, Apex, North Carolina 27539
Phone: 919.577.1080 Fax: 919.577.1081
NCBELS FIRM No. C-2378

CHANDLER'S RIDGE
CONSTRUCTION DOCUMENTS
CONSERVATION SUBDIVISION

410 W. YOUNG ST.
ROLESVILLE, NC
WAKE COUNTY

LOT 58 / 59 SEWER STUB PLAN & PROFILE

Project Engineer:	TSS
Designed By:	TEP
Drawn By:	TEP
Checked By:	TSS
Scale:	1" = 40'
Date:	06/17/2020
Project Number:	P170347

SHEET

C713

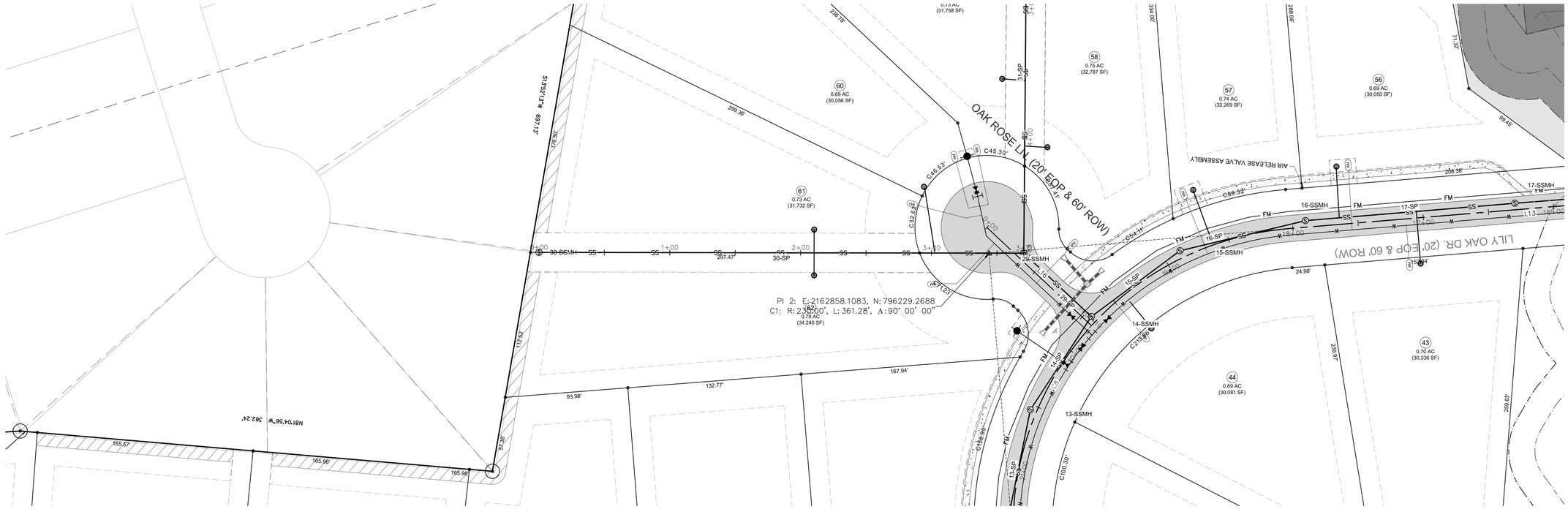

LOT 61 / 62 - PLAN
SCALE: 1"=40'
STA: 0+00 - 3+71

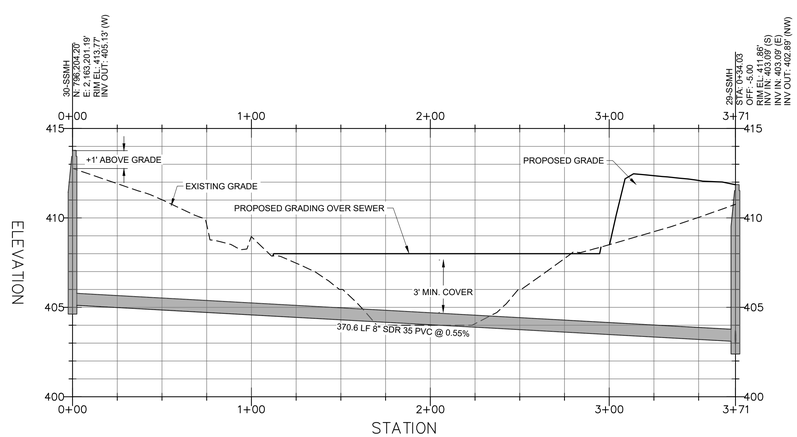

LOT 61 / 62 - PROFILE
HOR. SCALE: 1"=40' VER. SCALE: 1"=4'
STA: 0+00 - 3+71

SITE PERMITTING APPROVAL

Water and Sewer Permits (If applicable)

The City of Raleigh consents to the connection and extension of the City's **Public Sewer System** as shown on this plan. The material and Construction methods used for this project shall conform to the standards and specifications of the City's Public Utilities Handbook. **City of Raleigh Public Utilities Department Permit #** _____

The City of Raleigh consents to the connection and extension of the City's **Public Water System** as shown on this plan. The material and Construction methods used for this project shall conform to the standards and specifications of the City's Public Utilities Handbook. **City of Raleigh Public Utilities Department Permit #** _____

The City of Raleigh consents to the connection to its public sewer system and extension of the **private sewer collection** system as shown on this plan. The material and constructions methods used for this project shall conform to the standards and specifications of the City's Public Utilities Handbook.

City of Raleigh Public Utilities Department Permit # _____

CITY OF RALEIGH - PLANS AUTHORIZED FOR CONSTRUCTION

Electronic Approval: This approval is being issued electronically. This approval is valid only upon the signature of a City of Raleigh Review Officer below. The City will retain a copy of the approved plans. Any work authorized by this approval must proceed in accordance with the plans kept on file with the City. This electronic approval may not be edited once issued. Any modification to this approval once issued will invalidate this approval.

City of Raleigh Development Approval _____
Raleigh Water Review Officer

REV	DESCRIPTION	DATE
03	CONSTRUCTION DOCUMENTS 3rd SUBMITTAL	06/17/2020
02	CONSTRUCTION DOCUMENTS 2nd SUBMITTAL	04/15/2020
01	CONSTRUCTION DOCUMENTS 1st SUBMITTAL	01/13/2020

REVISIONS

P:\2017 Projects\170347 Chandlers Ridge\Eng\CAD\DWG\TP SHEET\P_170347_C700_ROAD.dwg

NORTH CAROLINA PROFESSIONAL SEAL 20234 ENGINEER THOMAS S. SPOCHT, JR.

Bateman Civil Survey Company
Engineers • Surveyors • Planners
2524 Reliance Avenue, Apex, North Carolina 27539
Phone: 919.577.1080 Fax: 919.577.1081
NCBELS FIRM No. C-2378

CHANDLER'S RIDGE
CONSTRUCTION DOCUMENTS
CONSERVATION SUBDIVISION

410 W. YOUNG ST.
ROLESVILLE, NC
WAKE COUNTY

LOT 61 / 62 SEWER STUB PLAN & PROFILE

Project Engineer:	TSS
Designed By:	TEP
Drawn By:	TEP
Checked By:	TSS
Scale:	1" = 40'
Date:	06/17/2020
Project Number:	P170347

SHEET
C714

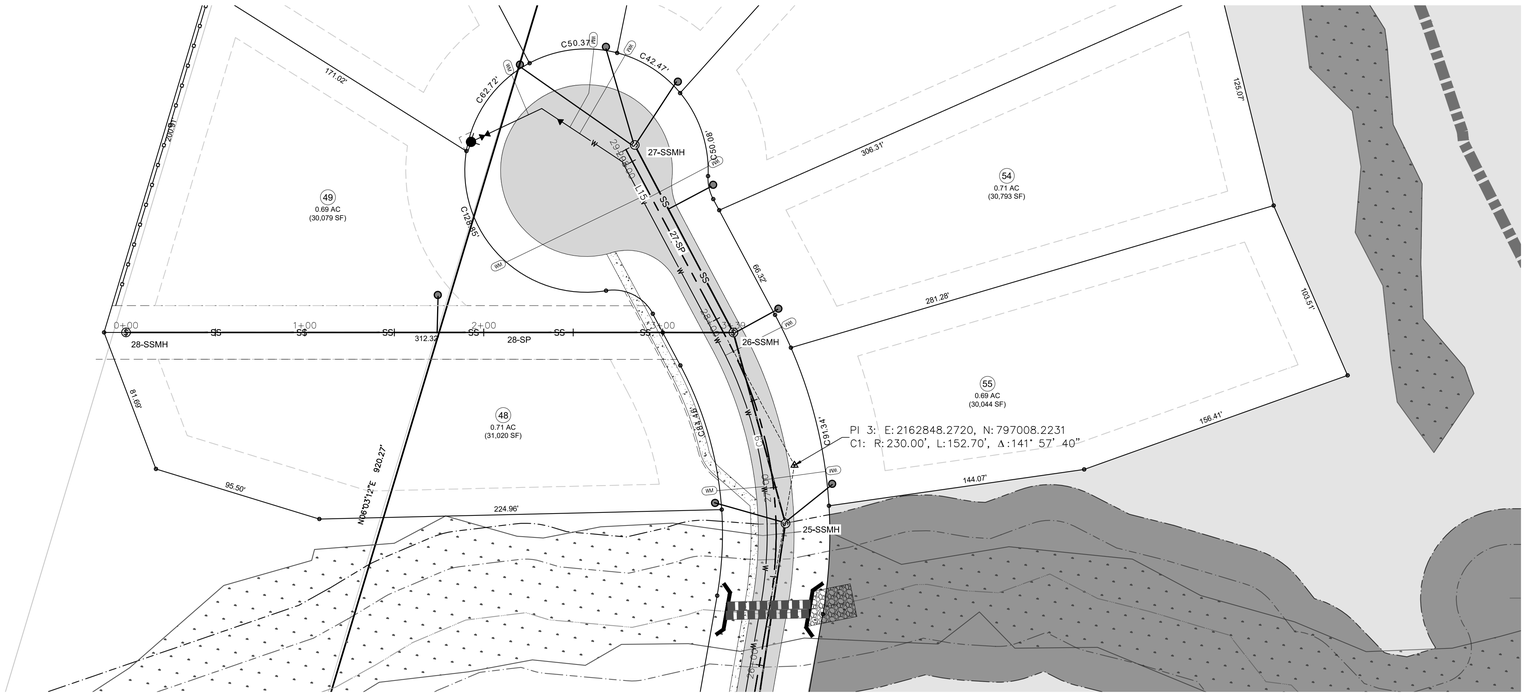

LOT 48 / 49 - PLAN
SCALE: 1"=40'
STA: 0+00 - 3+39

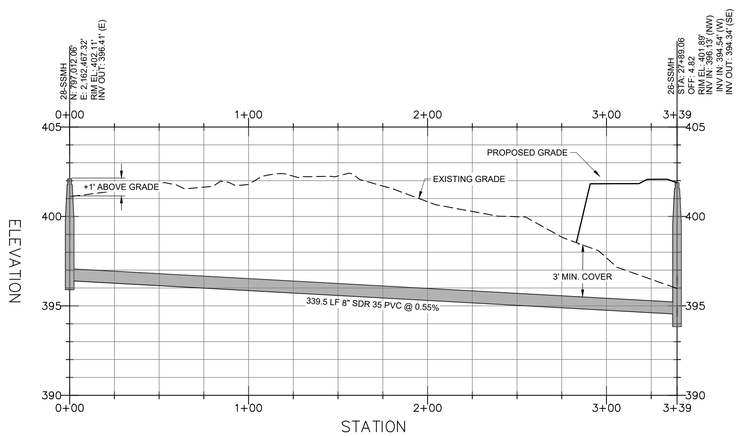

LOT 48 / 49 - PROFILE
HOR. SCALE: 1"=40' VER. SCALE: 1"=4'
STA: 0+00 - 3+39

SITE PERMITTING APPROVAL

Water and Sewer Permits (If applicable)

The City of Raleigh consents to the connection and extension of the City's **Public Sewer System** as shown on this plan. The material and Construction methods used for this project shall conform to the standards and specifications of the City's Public Utilities Handbook**. City of Raleigh Public Utilities Department Permit #** _____

The City of Raleigh consents to the connection and extension of the City's **Public Water System** as shown on this plan. The material and Construction methods used for this project shall conform to the standards and specifications of the City's Public Utilities Handbook. **City of Raleigh Public Utilities Department Permit #** _____

The City of Raleigh consents to the connection to its public sewer system and extension of the **private sewer collection** system as shown on this plan. The material and constructions methods used for this project shall conform to the standards and specifications of the City's Public Utilities Handbook.

City of Raleigh Public Utilities Department Permit # _____

CITY OF RALEIGH - PLANS AUTHORIZED FOR CONSTRUCTION

Electronic Approval: This approval is being issued electronically. This approval is valid only upon the signature of a City of Raleigh Review Officer below. The City will retain a copy of the approved plans. Any work authorized by this approval must proceed in accordance with the plans kept on file with the City. This electronic approval may not be edited once issued. Any modification to this approval once issued will invalidate this approval.

City of Raleigh Development Approval _____
Raleigh Water Review Officer

REV	DESCRIPTION	DATE
03	CONSTRUCTION DOCUMENTS 3rd SUBMITTAL	06/17/2020
02	CONSTRUCTION DOCUMENTS 2nd SUBMITTAL	04/15/2020
01	CONSTRUCTION DOCUMENTS 1st SUBMITTAL	01/13/2020

REVISIONS

P:\2017 Projects\170347 Chandlers Ridge\Eng\CAD\DWG\TP SHEET\P_170347_C700_ROAD.dwg

NORTH CAROLINA PROFESSIONAL SEAL 20234 ENGINEER THOMAS S. SPOCHT, JR.

Bateman Civil Survey Company
Engineers • Surveyors • Planners
2524 Reliance Avenue, Apex, North Carolina 27539
Phone: 919.577.1080 Fax: 919.577.1081
NCBELS FIRM No. C-2378

CHANDLER'S RIDGE
CONSTRUCTION DOCUMENTS
CONSERVATION SUBDIVISION
410 W. YOUNG ST.
ROLESVILLE, NC
WAKE COUNTY

LOT 48 / 49 SEWER STUB
PLAN & PROFILE

Project Engineer:	TSS
Designed By:	TEP
Drawn By:	TEP
Checked By:	TSS
Scale:	1" = 40'
Date:	06/17/2020
Project Number:	P170347

SHEET
C715

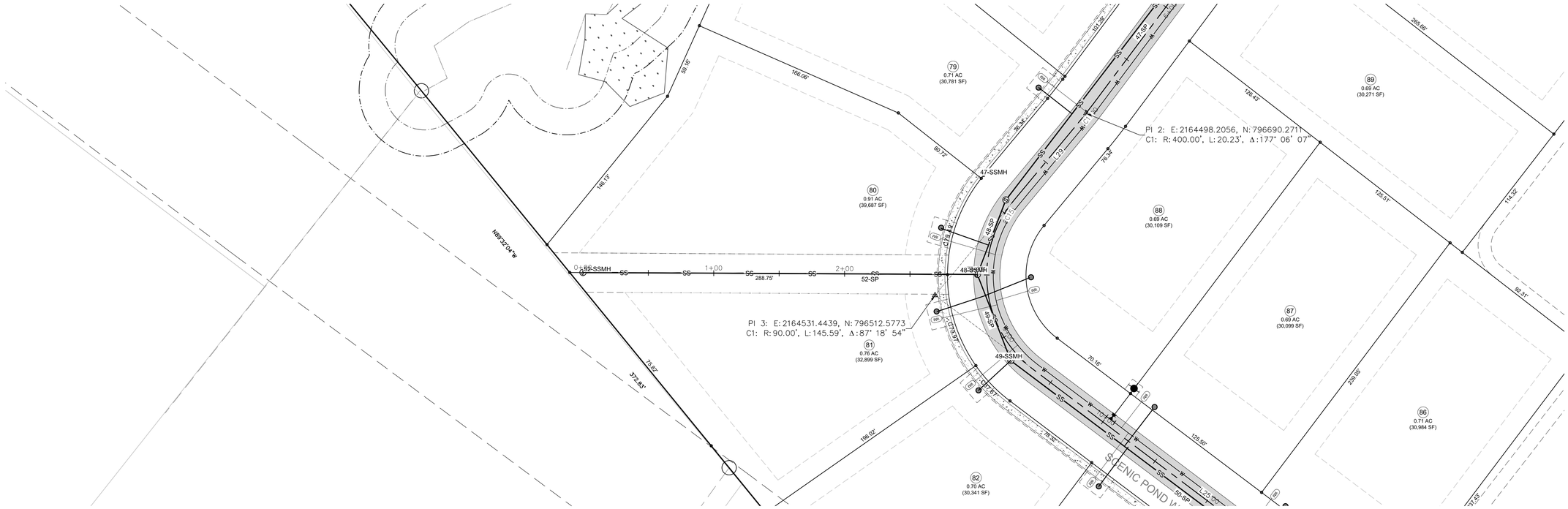

LOT 80 / 81 - PLAN
SCALE: 1"=40'
STA: 0+00 - 3+01

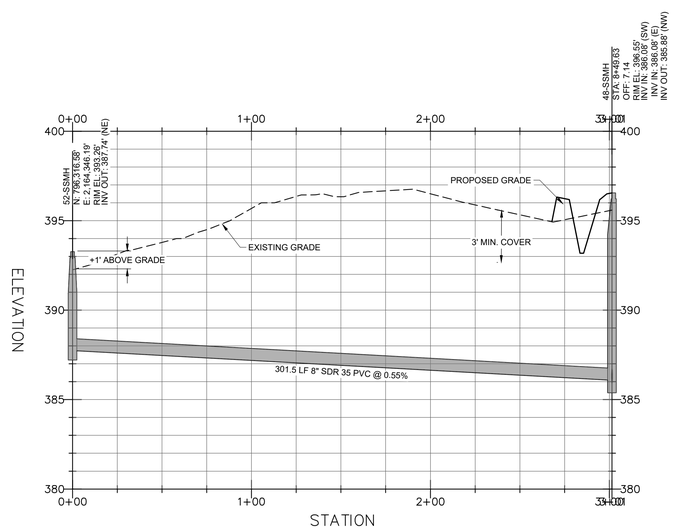

LOT 80 / 81 - PROFILE
HOR. SCALE: 1"=40' VER. SCALE: 1"=4'
STA: 0+00 - 3+01

SITE PERMITTING APPROVAL

Water and Sewer Permits (If applicable)

The City of Raleigh consents to the connection and extension of the City's **Public Sewer System** as shown on this plan. The material and Construction methods used for this project shall conform to the standards and specifications of the City's Public Utilities Handbook. **City of Raleigh Public Utilities Department Permit #** _____

The City of Raleigh consents to the connection and extension of the City's **Public Water System** as shown on this plan. The material and Construction methods used for this project shall conform to the standards and specifications of the City's Public Utilities Handbook. **City of Raleigh Public Utilities Department Permit #** _____

The City of Raleigh consents to the connection to its public sewer system and extension of the **private sewer collection** system as shown on this plan. The material and constructions methods used for this project shall conform to the standards and specifications of the City's Public Utilities Handbook.

City of Raleigh Public Utilities Department Permit # _____

CITY OF RALEIGH - PLANS AUTHORIZED FOR CONSTRUCTION

Electronic Approval: This approval is being issued electronically. This approval is valid only upon the signature of a City of Raleigh Review Officer below. The City will retain a copy of the approved plans. Any work authorized by this approval must proceed in accordance with the plans kept on file with the City. This electronic approval may not be edited once issued. Any modification to this approval once issued will invalidate this approval.

City of Raleigh Development Approval _____
Raleigh Water Review Officer

REV	DESCRIPTION	DATE
03	CONSTRUCTION DOCUMENTS 3rd SUBMITTAL	06/17/2020
02	CONSTRUCTION DOCUMENTS 2nd SUBMITTAL	04/15/2020
01	CONSTRUCTION DOCUMENTS 1st SUBMITTAL	01/13/2020

REVISIONS

P:\2017 Projects\170347 Chandlers Ridge\Eng\CAD\DWG\TP SHEET\P_170347_C700_ROAD.dwg

NORTH CAROLINA PROFESSIONAL SEAL 20234 ENGINEER THOMAS S. SPOON, JR.

Bateman Civil Survey Company
Engineers • Surveyors • Planners
2524 Reliance Avenue, Apex, North Carolina 27539
Phone: 919.577.1080 Fax: 919.577.1081
NCBELS FIRM No. C-2378

CHANDLER'S RIDGE
CONSTRUCTION DOCUMENTS
CONSERVATION SUBDIVISION

410 W. YOUNG ST.
ROLESVILLE, NC
WAKE COUNTY

LOT 80 / 81 SEWER STUB PLAN & PROFILE

Project Engineer:	TSS
Designed By:	TEP
Drawn By:	TEP
Checked By:	TSS
Scale:	1" = 40'
Date:	06/17/2020
Project Number:	P170347

SHEET
C716

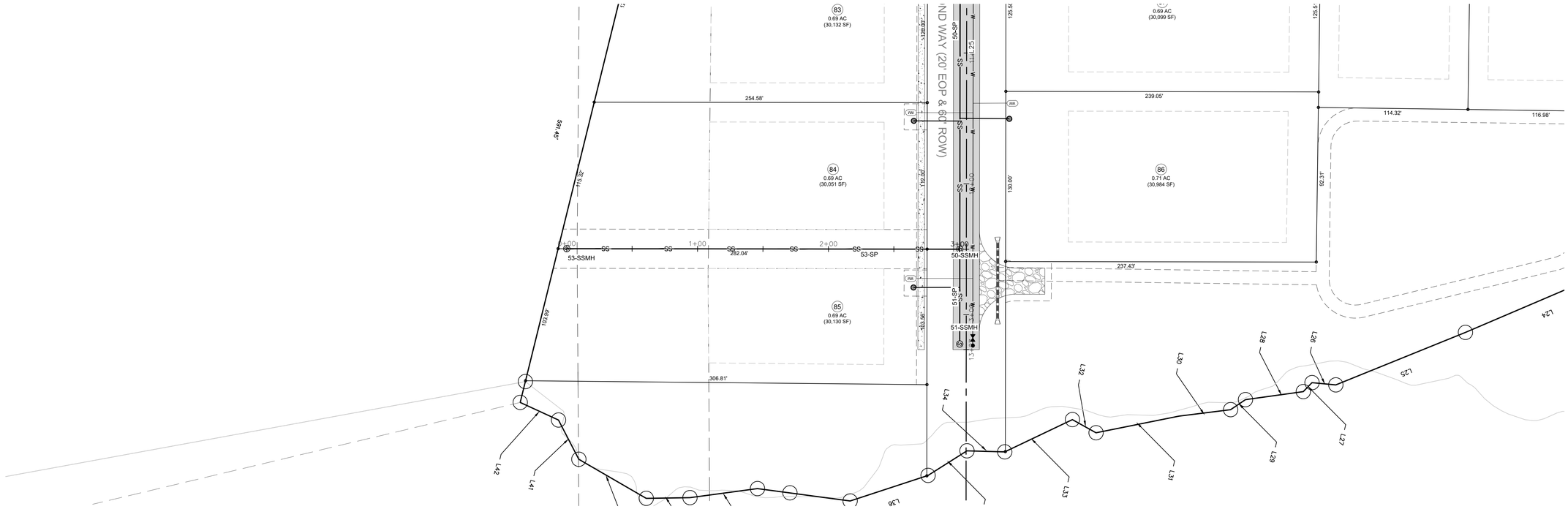

LOT 84 / 85 - PLAN
SCALE: 1"=40'
STA: 0+00 - 3+00

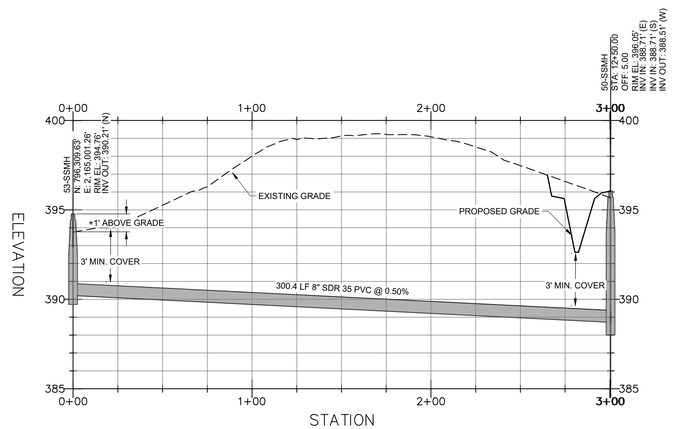

LOT 84 / 85 - PROFILE
HOR. SCALE: 1"=40' VER. SCALE: 1"=4'
STA: 0+00 - 3+00

SITE PERMITTING APPROVAL

Water and Sewer Permits (If applicable)

The City of Raleigh consents to the connection and extension of the City's **Public Sewer System** as shown on this plan. The material and Construction methods used for this project shall conform to the standards and specifications of the City's Public Utilities Handbook. **City of Raleigh Public Utilities Department Permit #** _____

The City of Raleigh consents to the connection and extension of the City's **Public Water System** as shown on this plan. The material and Construction methods used for this project shall conform to the standards and specifications of the City's Public Utilities Handbook. **City of Raleigh Public Utilities Department Permit #** _____

The City of Raleigh consents to the connection to its public sewer system and extension of the **private sewer collection** system as shown on this plan. The material and constructions methods used for this project shall conform to the standards and specifications of the City's Public Utilities Handbook.

City of Raleigh Public Utilities Department Permit # _____

CITY OF RALEIGH - PLANS AUTHORIZED FOR CONSTRUCTION

Electronic Approval: This approval is being issued electronically. This approval is valid only upon the signature of a City of Raleigh Review Officer below. The City will retain a copy of the approved plans. Any work authorized by this approval must proceed in accordance with the plans kept on file with the City. This electronic approval may not be edited once issued. Any modification to this approval once issued will invalidate this approval.

City of Raleigh Development Approval _____
Raleigh Water Review Officer

REV	DESCRIPTION	DATE
03	CONSTRUCTION DOCUMENTS 3rd SUBMITTAL	06/17/2020
02	CONSTRUCTION DOCUMENTS 2nd SUBMITTAL	04/15/2020
01	CONSTRUCTION DOCUMENTS 1st SUBMITTAL	01/13/2020

REVISIONS

P:\2017 Projects\170347 Chandlers Ridge\Eng\CAD\DWG\TP SHEET\P_170347_C700_ROAD.dwg

NORTH CAROLINA PROFESSIONAL SEAL 20234 ENGINEER THOMAS S. SPOCHT, JR.

Bateman Civil Survey Company
Engineers • Surveyors • Planners
2524 Reliance Avenue, Apex, North Carolina 27539
Phone: 919.577.1080 Fax: 919.577.1081
NCBELS FIRM No. C-2378

CHANDLER'S RIDGE
CONSTRUCTION DOCUMENTS
CONSERVATION SUBDIVISION
410 W. YOUNG ST.
ROLESVILLE, NC
WAKE COUNTY

LOT 84 / 85 SEWER STUB
PLAN & PROFILE

Project Engineer:	TSS
Designed By:	TEP
Drawn By:	TEP
Checked By:	TSS
Scale:	1" = 40'
Date:	06/17/2020
Project Number:	P170347

SHEET
C717

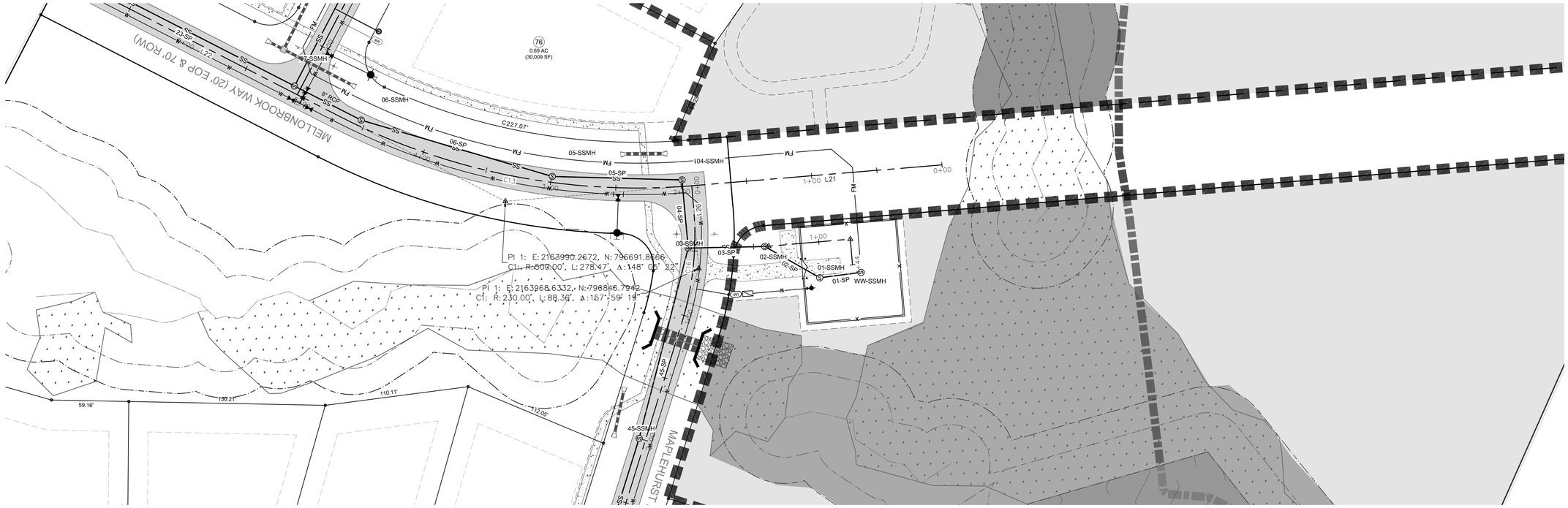

PUMP STATION PLAN
SCALE: 1"=40'
STA: 0+00 - 1+44

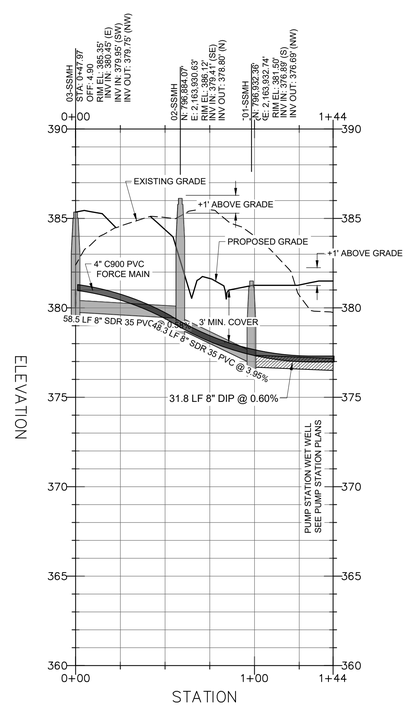

PUMP STATION - PROFILE
HOR. SCALE: 1"=40' VER. SCALE: 1"=4'
STA: 0+00 - 1+44

SITE PERMITTING APPROVAL

Water and Sewer Permits (If applicable)

The City of Raleigh consents to the connection and extension of the City's **Public Sewer System** as shown on this plan. The material and Construction methods used for this project shall conform to the standards and specifications of the City's Public Utilities Handbook. **City of Raleigh Public Utilities Department Permit #** _____

The City of Raleigh consents to the connection and extension of the City's **Public Water System** as shown on this plan. The material and Construction methods used for this project shall conform to the standards and specifications of the City's Public Utilities Handbook. **City of Raleigh Public Utilities Department Permit #** _____

The City of Raleigh consents to the connection to its public sewer system and extension of the **private sewer collection** system as shown on this plan. The material and constructions methods used for this project shall conform to the standards and specifications of the City's Public Utilities Handbook.

City of Raleigh Public Utilities Department Permit # _____

CITY OF RALEIGH - PLANS AUTHORIZED FOR CONSTRUCTION

Electronic Approval: This approval is being issued electronically. This approval is valid only upon the signature of a City of Raleigh Review Officer below. The City will retain a copy of the approved plans. Any work authorized by this approval must proceed in accordance with the plans kept on file with the City. This electronic approval may not be edited once issued. Any modification to this approval once issued will invalidate this approval.

City of Raleigh Development Approval _____
Raleigh Water Review Officer

REV	DESCRIPTION	DATE
03	CONSTRUCTION DOCUMENTS 3rd SUBMITTAL	06/17/2020
02	CONSTRUCTION DOCUMENTS 2nd SUBMITTAL	04/15/2020
01	CONSTRUCTION DOCUMENTS 1st SUBMITTAL	01/13/2020

REVISIONS

P:\2017 Projects\170347 Chandlers Ridge\Eng\CAD\DWG\TP SHEET\P_170347_C700_ROAD.dwg

NORTH CAROLINA PROFESSIONAL SEAL 20234 ENGINEER THOMAS S. SPOCHT, JR.

Bateman Civil Survey Company
Engineers • Surveyors • Planners
2524 Reliance Avenue, Apex, North Carolina 27539
Phone: 919.577.1080 Fax: 919.577.1081
NCBELS FIRM No. C-2378

CHANDLER'S RIDGE
CONSTRUCTION DOCUMENTS
CONSERVATION SUBDIVISION

410 W. YOUNG ST.
ROLESVILLE, NC
WAKE COUNTY

PUMP STATION PLAN & PROFILE

Project Engineer:	TSS
Designed By:	TEP
Drawn By:	TEP
Checked By:	TSS
Scale:	1" = 40'
Date:	06/17/2020
Project Number:	P170347

SHEET
C715

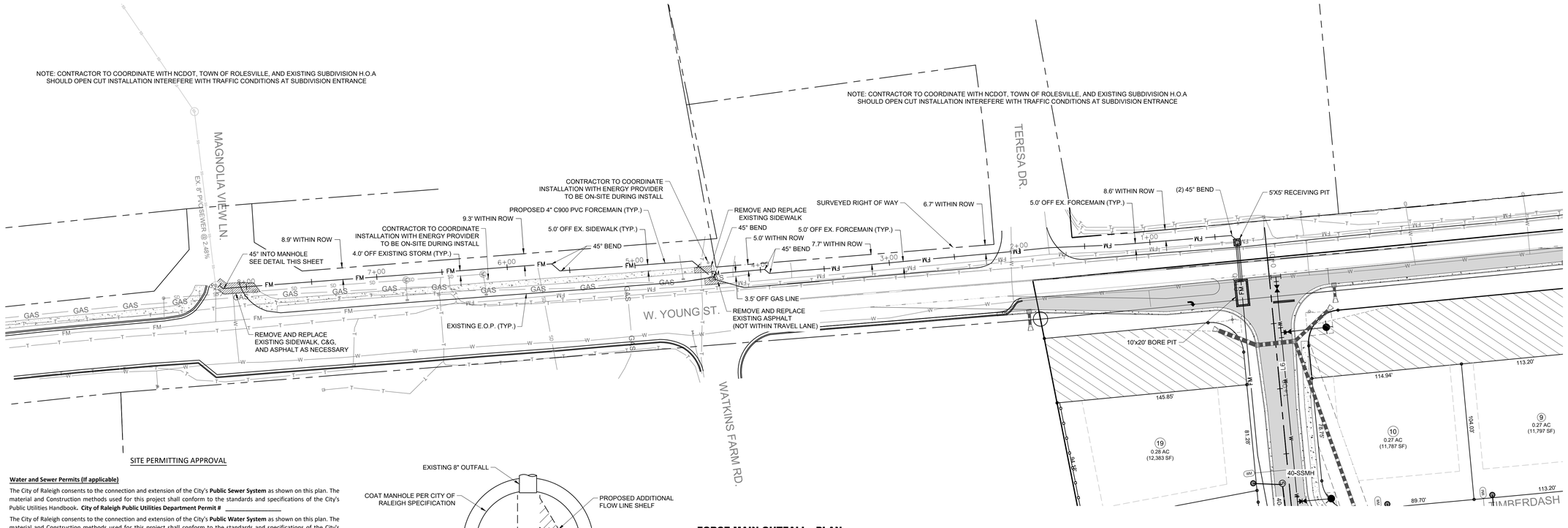

SITE PERMITTING APPROVAL

Water and Sewer Permits (If applicable)

The City of Raleigh consents to the connection and extension of the City's **Public Sewer System** as shown on this plan. The material and Construction methods used for this project shall conform to the standards and specifications of the City's Public Utilities Handbook. **City of Raleigh Public Utilities Department Permit #** _____

The City of Raleigh consents to the connection and extension of the City's **Public Water System** as shown on this plan. The material and Construction methods used for this project shall conform to the standards and specifications of the City's Public Utilities Handbook. **City of Raleigh Public Utilities Department Permit #** _____

The City of Raleigh consents to the connection to its public sewer system and extension of the **private sewer collection** system as shown on this plan. The material and constructions methods used for this project shall conform to the standards and specifications of the City's Public Utilities Handbook.

City of Raleigh Public Utilities Department Permit # _____

CITY OF RALEIGH - PLANS AUTHORIZED FOR CONSTRUCTION

Electronic Approval: This approval is being issued electronically. This approval is valid only upon the signature of a City of Raleigh Review Officer below. The City will retain a copy of the approved plans. Any work authorized by this approval must proceed in accordance with the plans kept on file with the City. This electronic approval may not be edited once issued. Any modification to this approval once issued will invalidate this approval.

City of Raleigh Development Approval _____
Raleigh Water Review Officer

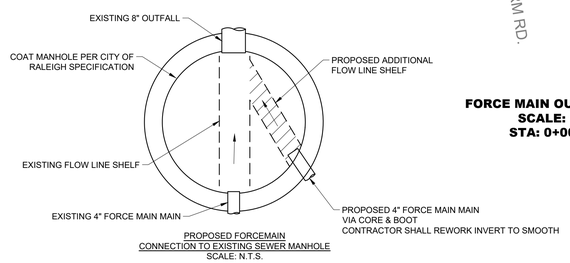

PROPOSED FORCEMAIN CONNECTION TO EXISTING SEWER MANHOLE
SCALE: N.T.S.

FORCE MAIN OUTFALL - PLAN
SCALE: 1"=40'
STA: 0+00 - 8+10

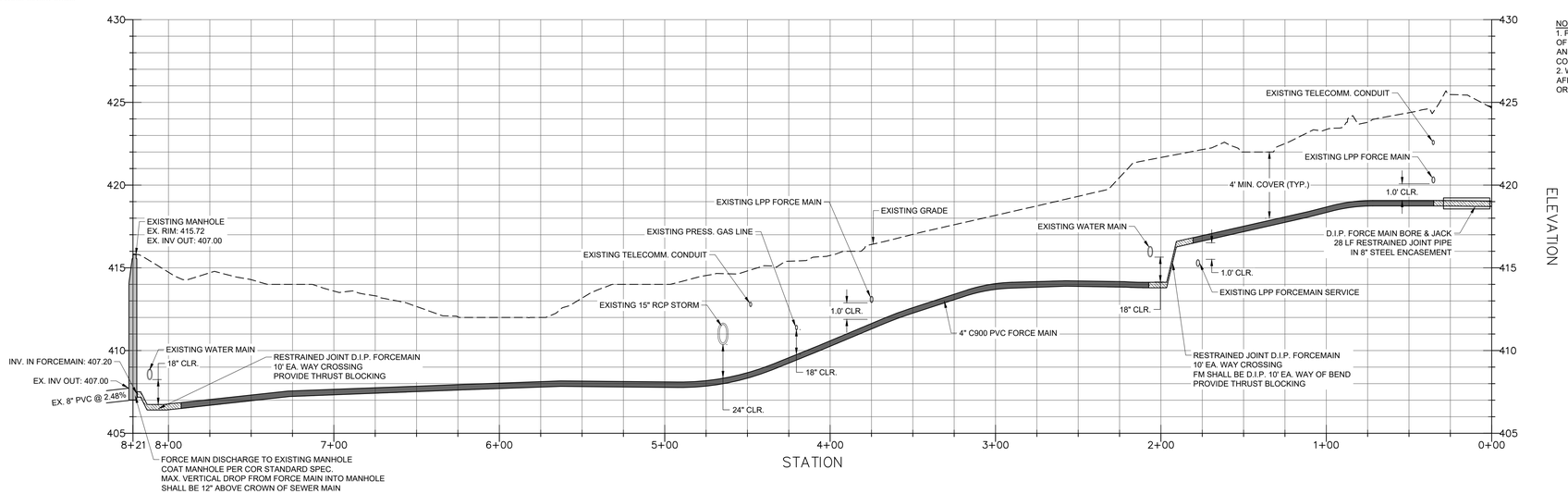

FORCE MAIN OUTFALL - PROFILE
HOR. SCALE: 1"=40' VER. SCALE: 1"=4'
STA: 0+00 - 8+21

NOTES:
1. PROVIDE POWER POLE SUPPORT WHEN OPEN TRENCH IS WITHIN 3' OF POLE OR GUY WIRES AND WHEN OWNER DEEMS NECESSARY AND/OR CONDITIONS WARRANT. CONTRACTOR IS RESPONSIBLE FOR COORDINATION WITH POWER UTILITY.
2. WHERE APPLICABLE, CONTRACTOR TO REMOVE AND REPLACE AFFECTED EXISTING STORM DRAINAGE AND.OR STRUCTURES TO ORIGINAL INVERT ELEVATIONS AND WITH LIKE MATERIALS.

REV	DESCRIPTION	DATE
03	CONSTRUCTION DOCUMENTS 3rd SUBMITTAL	06/17/2020
02	CONSTRUCTION DOCUMENTS 2nd SUBMITTAL	04/15/2020
01	CONSTRUCTION DOCUMENTS 1st SUBMITTAL	01/13/2020

REVISIONS

P:\2017 Projects\170347 Chandlers Ridge\Eng\CAD\DWG\TP SHEET\P_170347_C700_ROAD.dwg

NORTH CAROLINA PROFESSIONAL SEAL 20234 ENGINEER THOMAS S. SPOCHT, JR.

Bateman Civil Survey Company
Engineers ● Surveyors ● Planners
2524 Reliance Avenue, Apex, North Carolina 27539
Phone: 919.577.1080 Fax: 919.577.1081
NCBELS FIRM No. C-2378

CHANDLER'S RIDGE
CONSTRUCTION DOCUMENTS
CONSERVATION SUBDIVISION
410 W. YOUNG ST.
ROLESVILLE, NC
WAKE COUNTY

FORCE MAIN OUTFALL
PLAN & PROFILE

Project Engineer:	TSS
Designed By:	TEP
Drawn By:	TEP
Checked By:	TSS
Scale:	1" = 40'
Date:	06/17/2020
Project Number:	P170347

SHEET
C719

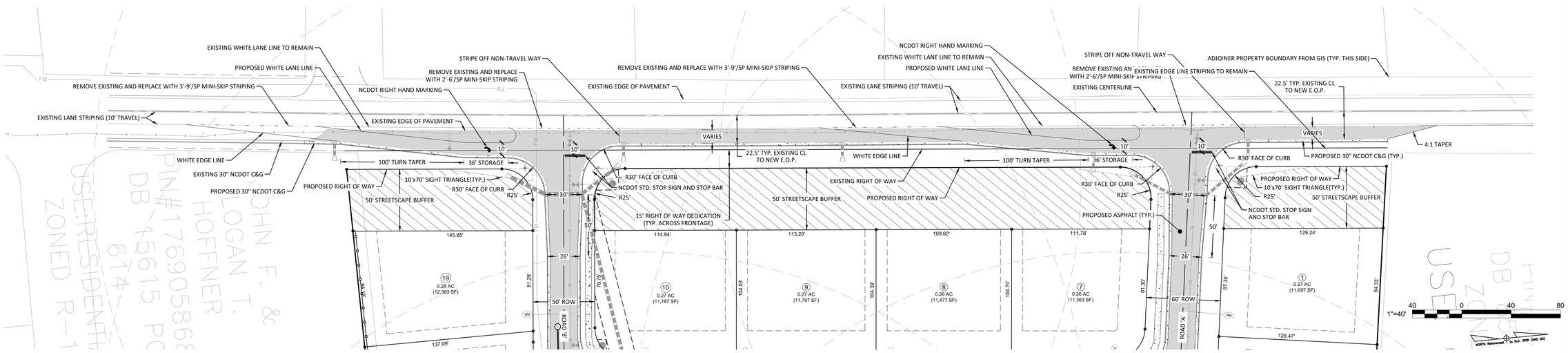

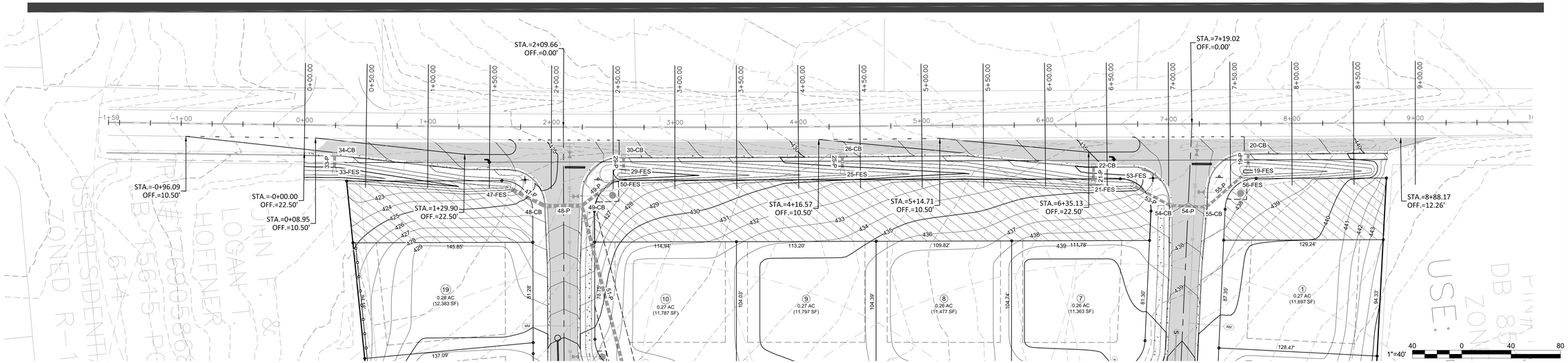

SIGNAGE, STRIPING, AND MARKING NOTES:

1. ALL INTERNAL SIGNAGE SHALL BE COORDINATED WITH OWNER FOR ACTUAL LOCATION AT TIME OF INSTALLATION. SIGNAGE LEADING ONTO PUBLIC THOROUGHFARE SHALL BE INSTALLED AT RIGHT OF WAY PER DOT STANDARDS

2. ALL PAVEMENT STRIPING SHALL BE THERMOPLASTIC REFLECTIVE PAINT. MATERIALS AND DIMENSIONS SHALL CONFORM TO NCDOT STANDARDS AND SPECIFICATIONS.

FOR WIDENING GREATER THAN 6'

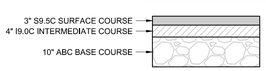

ALL SUB-BASE SOIL TO BE COMPACTED TO NCDOT STANDARD PROCTOR SPECIFICATION

FOR WIDENING LESS THAN 6'

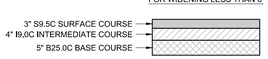

ALL SUB-BASE SOIL TO BE COMPACTED TO NCDOT STANDARD PROCTOR SPECIFICATION

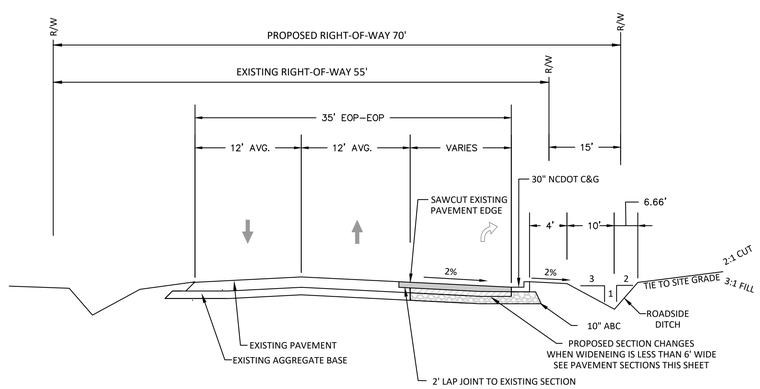

TYPICAL ROAD WIDENING SECTION
AVERETTE ROAD, WAKE COUNTY
NOT TO SCALE

NOTES:

1. ALL CONSTRUCTION IN THE RIGHT OF WAY SHALL TO BE IN ACCORDANCE TO NORTH CAROLINA DEPARTMENT OF TRANSPORTATION STANDARDS AND SPECIFICATIONS.
2. CONTRACTOR SHALL VERIFY THE LOCATION OF ALL EXISTING UTILITIES, AND SHALL BE RESPONSIBLE FOR ANY DAMAGE RESULTING FROM THEIR ACTIVITIES. CONTRACTOR SHALL CALL UTILITY LOCATOR SERVICE 48 HOURS PRIOR TO BEGINNING CONSTRUCTION. NC ONE CALL 1-800-632-4949 PER NCGS 87-102.
3. NORTH CAROLINA DEPARTMENT OF TRANSPORTATION DRIVEWAY PERMIT IS REQUIRED BEFORE STARTING CONSTRUCTION.
4. THE DEVELOPER IS RESPONSIBLE FOR THE FABRICATION AND INSTALLATION OF ALL REQUIRED SIGNS AND PAVEMENT MARKINGS WITH IN THE PUBLIC RIGHT OF WAY.
5. CONTRACTOR IS RESPONSIBLE FOR PREPARING AND SUBMITTING A TRAFFIC MAINTENANCE PLAN FOR REVIEW AND APPROVAL BY DOT PRIOR TO BEGINNING WORK WITHIN THE RIGHT OF WAY.
6. CONTRACTOR SHALL MAINTAIN ACCESS DURING ALL TIMES OF CONSTRUCTION.
7. CONTRACTOR SHALL CONTACT WAKE COUNTY SCHOOLS TO COORDINATE ROAD WORK SO IT WILL NOT ADVERSELY AFFECT THE SCHOOLS TRANSPORTATION SCHEDULE AND OR OPERATIONS
8. THERMOPLASTIC PAVEMENT MARKINGS AND RAISED PAVEMENT MARKERS SHALL BE INSTALLED WITHIN THE TURN LANE CONSTRUCTION LIMITS IN ACCORDANCE WITH THE STANDARD NCDOT STANDARDS AND SPECIFICATIONS.
9. A 2' LAP JOINT TO EXISTING PAVEMENT SHALL BE PROVIDED ALONG THE ENTIRE LENGTH OF ROAD IMPROVEMENTS.

REV	DESCRIPTION	DATE
03	CONSTRUCTION DOCUMENTS 3rd SUBMITTAL	06/17/2020
02	CONSTRUCTION DOCUMENTS 2nd SUBMITTAL	04/15/2020
01	CONSTRUCTION DOCUMENTS 1st SUBMITTAL	01/13/2020

REVISIONS

P:\2017 Projects\170347 Chandlers Ridge\Eng\CADD\DWG\TP SHEET\P_170347_C800_AVERETTE.dwg

NORTH CAROLINA PROFESSIONAL SEAL 20234 ENGINEER THOMAS S. SPEIDELL JR.

Bateman Civil Survey Company
Engineers • Surveyors • Planners
2524 Reliance Avenue, Apex, North Carolina 27539
Phone: 919.577.1080 Fax: 919.577.1081
NCBELS FIRM No. C-2378

CHANDLER'S RIDGE
CONSTRUCTION DOCUMENTS
CONSERVATION SUBDIVISION
410 W. YOUNG ST.
ROLESVILLE, NC
WAKE COUNTY

ROAD WIDENING
W. YOUNG ST.

Project Engineer:	TSS
Designed By:	TEP
Drawn By:	TEP
Checked By:	TSS
Scale:	1" = 40'
Date:	06/17/2020
Project Number:	P170347

SHEET
C800

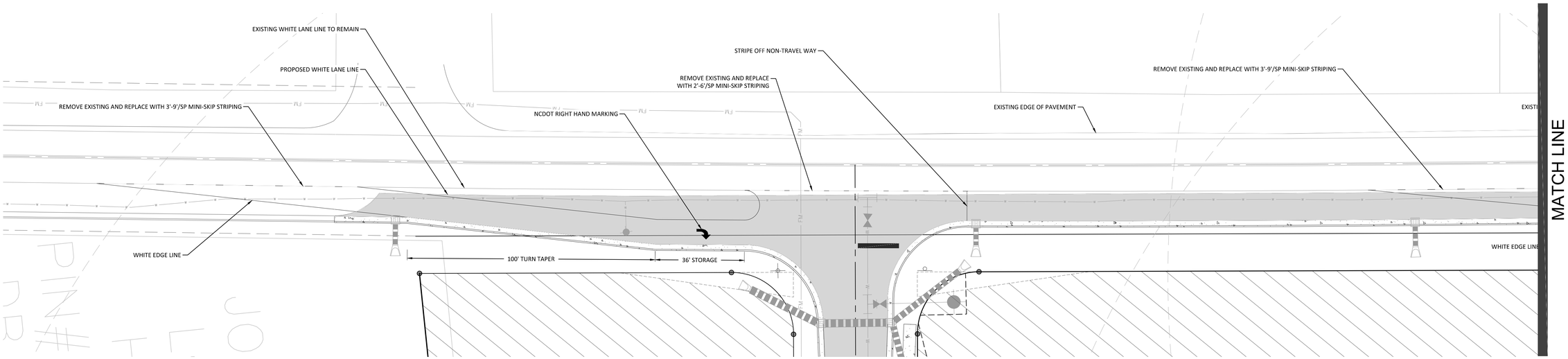

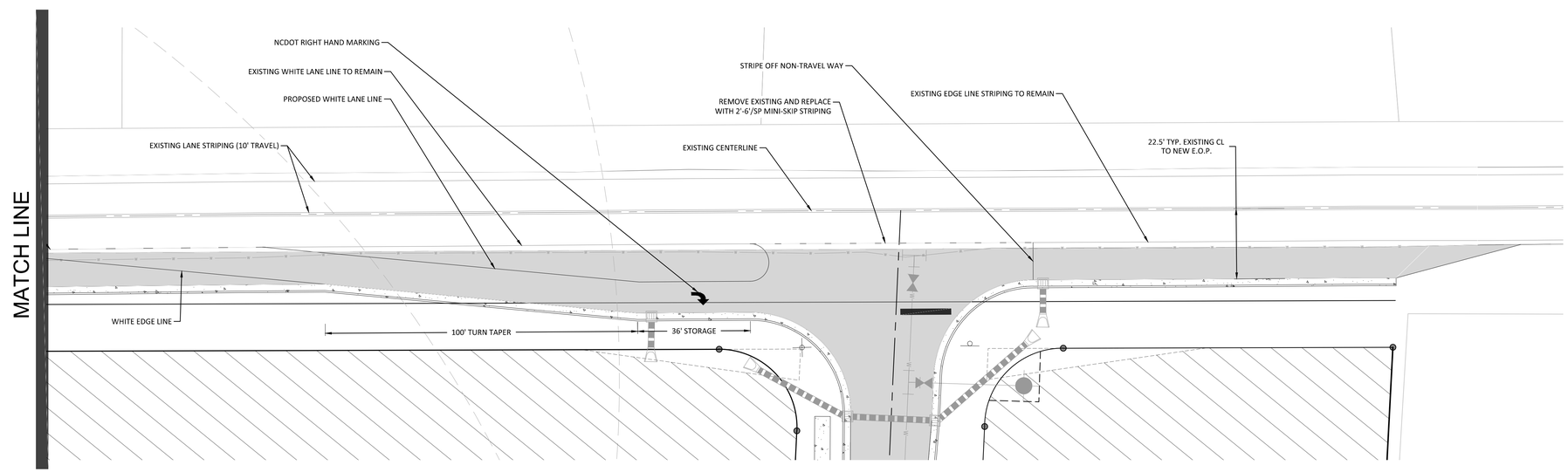

1"=40' 40 0 40 80

NORTH Reference: N.C. GRID (NAD 83)

SIGNAGE, STRIPING, AND MARKING NOTES:

1. ALL INTERNAL SIGNAGE SHALL BE COORDINATED WITH OWNER FOR ACTUAL LOCATION AT TIME OF INSTALLATION. SIGNAGE LEADING ONTO PUBLIC THOROUGHFARE SHALL BE INSTALLED AT RIGHT OF WAY PER DOT STANDARDS

2. ALL PAVEMENT STRIPING SHALL BE THERMOPLASTIC REFLECTIVE PAINT. MATERIALS AND DIMENSIONS SHALL CONFORM TO NCDOT STANDARDS AND SPECIFICATIONS.

REV	DESCRIPTION	DATE
03	CONSTRUCTION DOCUMENTS 3rd SUBMITTAL	06/17/2020
02	CONSTRUCTION DOCUMENTS 2nd SUBMITTAL	04/15/2020
01	CONSTRUCTION DOCUMENTS 1st SUBMITTAL	01/13/2020

REVISIONS

P:\2017 Projects\170347 Chandlers Ridge\Eng\CAD\DWG\TP SHEET\P_170347_C800_AVERETTE.dwg

NORTH CAROLINA PROFESSIONAL SEAL 20234 ENGINEER THOMAS S. SPENCER JR. 6/17/20

Bateman Civil Survey Company
Engineers • Surveyors • Planners
2524 Reliance Avenue, Apex, North Carolina 27539
Phone: 919.577.1080 Fax: 919.577.1081
NCBELS FIRM No. C-2378

CHANDLER'S RIDGE
CONSTRUCTION DOCUMENTS
CONSERVATION SUBDIVISION

410 W. YOUNG ST.
ROLESVILLE, NC
WAKE COUNTY

STRIPING PLAN
W. YOUNG ST.

Project Engineer:	TSS
Designed By:	TEP
Drawn By:	TEP
Checked By:	TSS
Scale:	1" = 40'
Date:	06/17/2020
Project Number:	P170347

SHEET

C801

REV	DESCRIPTION	DATE
03	CONSTRUCTION DOCUMENTS 3rd SUBMITTAL	06/17/2020
02	CONSTRUCTION DOCUMENTS 2nd SUBMITTAL	04/15/2020
01	CONSTRUCTION DOCUMENTS 1st SUBMITTAL	01/13/2020

REVISIONS

P:\2017 Projects\170347 Chandlers Ridge\Eng\CAD\DWG\TP SHEET\P_170347_C800_AVERETTE.dwg

NORTH CAROLINA PROFESSIONAL SEAL 20234 ENGINEER THOMAS S. SPEIGHT

Bateman Civil Survey Company
Engineers • Surveyors • Planners
2524 Reliance Avenue, Apex, North Carolina 27539
Phone: 919.577.1080 Fax: 919.577.1081
NCBELS FIRM No. C-2378

CHANDLER'S RIDGE
CONSTRUCTION DOCUMENTS
CONSERVATION SUBDIVISION

410 W. YOUNG ST.
ROLESVILLE, NC
WAKE COUNTY

ROAD WIDENING CROSS SECTIONS

Project Engineer:	TSS
Designed By:	TEP
Drawn By:	TEP
Checked By:	TSS
Scale:	1" = 20'
Date:	06/17/2020
Project Number:	P170347

SHEET

C802

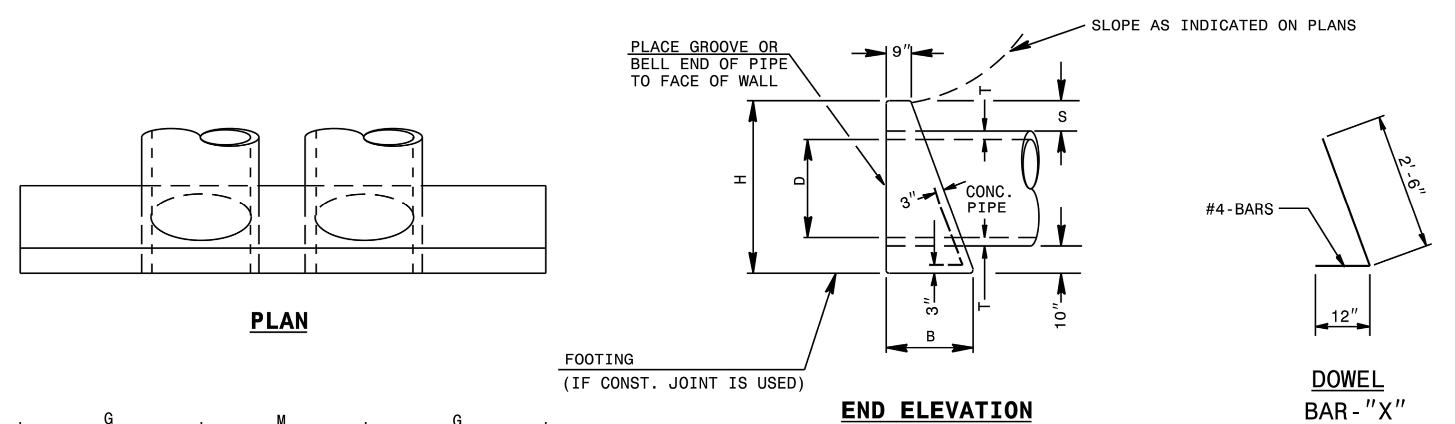

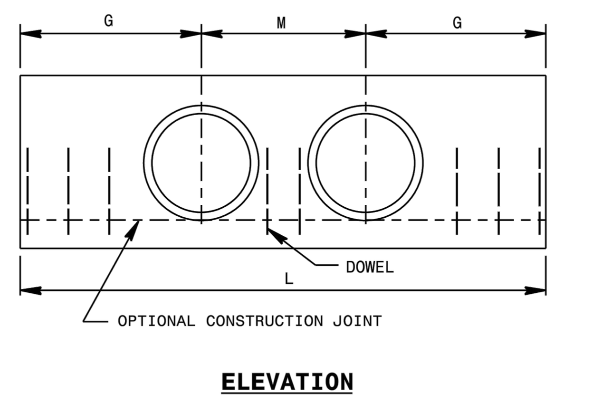

DOWELS IN ENDWALL WITH REINFORCED CONCRETE PIPE																			
LOC.	PIPE	SINGLE PIPE									DOUBLE PIPE								
	DIA.	15"	18"	24"	30"	36"	42"		48"		15"	18"	24"	30"	36"	42"		48"	
	BARS	"X"	"X"	"X"	"X"	"X"	"X"	Y*	"X"	Y*	"X"	"X"	"X"	"X"	"X"	"X"	Y*	"X"	Y*
G	QTY.	2	2	3	3	4	4	2	5	2	2	2	3	3	4	4	2	5	2
M	QTY.	-	-	-	-	-	-		-		1	1	2	2	2	2		3	
G	QTY.	2	2	3	3	4	4		5		2	2	3	3	4	4		5	
TOTAL LBS.		9	9	14	14	19	55		65		12	12	19	19	23	77		92	

DIMENSIONS AND CONCRETE QUANTITIES USING CONCRETE PIPE										
	COMMON DIMENSIONS					SINGLE PIPE		DOUBLE PIPE		
D	H	B	G	T	S	L	YD^3	M	L	YD^3
15"	3'-3"	1'-8"	2'-9"	2¼"	9½"	5'-6"	0.7	2'-2"	7'-8"	1.0
18"	3'-7"	1'-10"	3'-2"	2½"	10"	6'-4"	1.0	2'-7"	8'-11"	1.3
24"	4'-2"	2'-1"	4'-0"	3"	10"	8'-0"	1.5	3'-5"	11'-5"	2.0
30"	5'-0"	2'-6"	4'-7"	4¼"	11½"	9'-2"	2.3	4'-3"	13'-5"	3.1
36"	5'-8"	2'-8"	5'-6"	4¾"	11½"	11'-0"	3.4	5'-0"	16'-0"	4.5
42"	6'-2"	3'-1"	6'-4"	5¼"	11½"	12'-8"	4.5	5'-10"	18'-6"	6.0
48"	6'-9"	3'-5"	7'-2"	5¾"	11½"	14'-4"	6.0	6'-8"	21'-0"	8.0

*SEE SHEET 3

1-18 STATE OF NORTH CAROLINA DEPT. OF TRANSPORTATION DIVISION OF HIGHWAYS RALEIGH, N.C.

ROADWAY STANDARD DRAWING FOR CONCRETE ENDWALL FOR SINGLE AND DOUBLE PIPE CULVERTS 15" THRU 48" PIPE - 90° SKEW

SHEET 1 OF 3
838.01

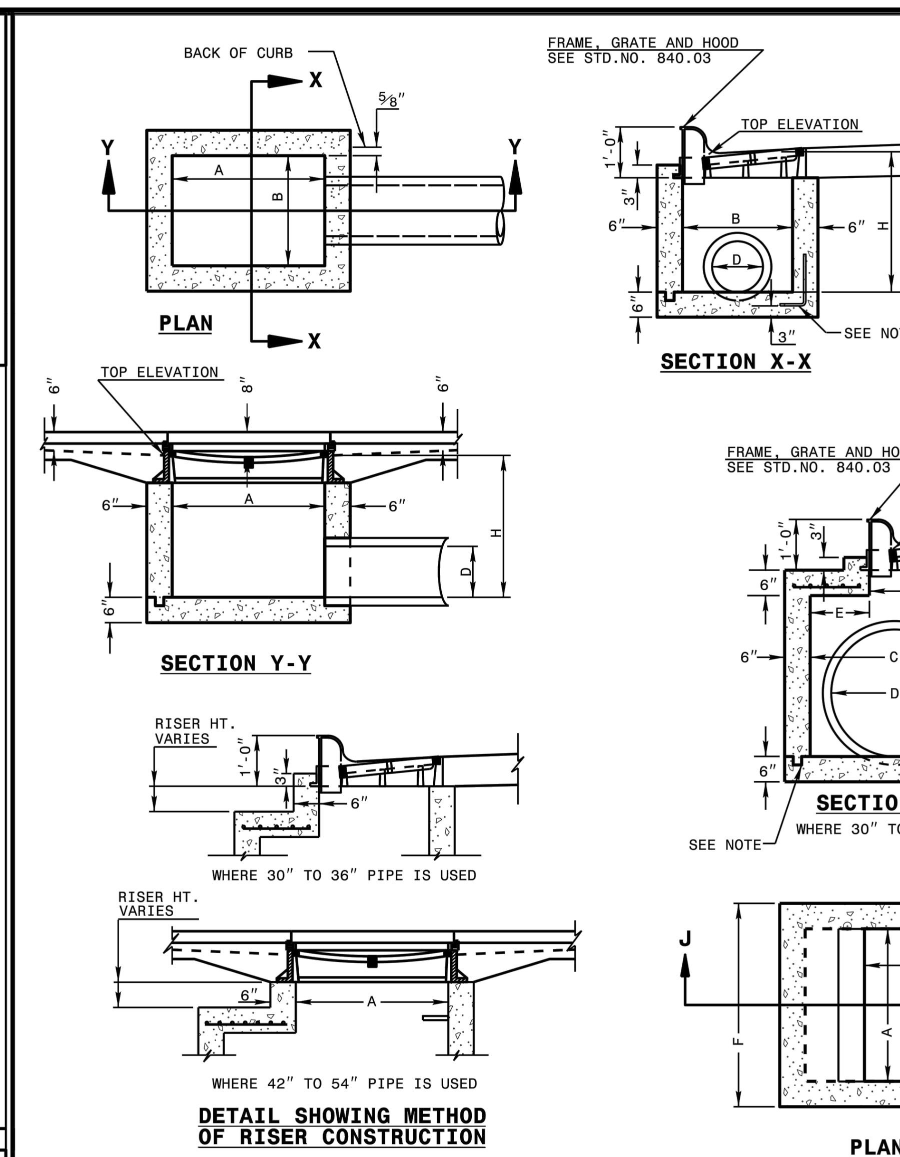

GENERAL NOTES:

USE CLASS "B" CONCRETE THROUGHOUT.

PROVIDE ALL CATCH BASINS OVER 3'-6" IN DEPTH WITH STEPS 12" ON CENTER. USE STEPS WHICH COMPLY WITH STD. DRAWING 840.66.

OPTIONAL CONSTRUCTION - MONOLITHIC POUR, 2" KEYWAY, OR #4 BAR DOWELS AT 12" CENTERS AS DIRECTED BY THE ENGINEER.

USE FORMS FOR THE CONSTRUCTION OF THE BOTTOM SLAB.

IF REINFORCED CONCRETE PIPE IS SET IN BOTTOM SLAB OF BOX, ADD TO SLAB AS SHOWN ON STD. NO. 840.00.

USE TYPE "E", "F" AND "G" GRATES UNLESS OTHERWISE INDICATED.

FOR 8'-0" IN HEIGHT OR LESS USE 6" WALLS AND BOTTOM SLAB. OVER 8'-0" TO 16'-0" IN HEIGHT USE 8" WALLS AND BOTTOM SLAB. ADJUST QUANTITIES ACCORDINGLY.

CONSTRUCT WITH PIPE CROWNS MATCHING.

CHAMFER ALL EXPOSED CORNERS 1".

DRAWING NOT TO SCALE.

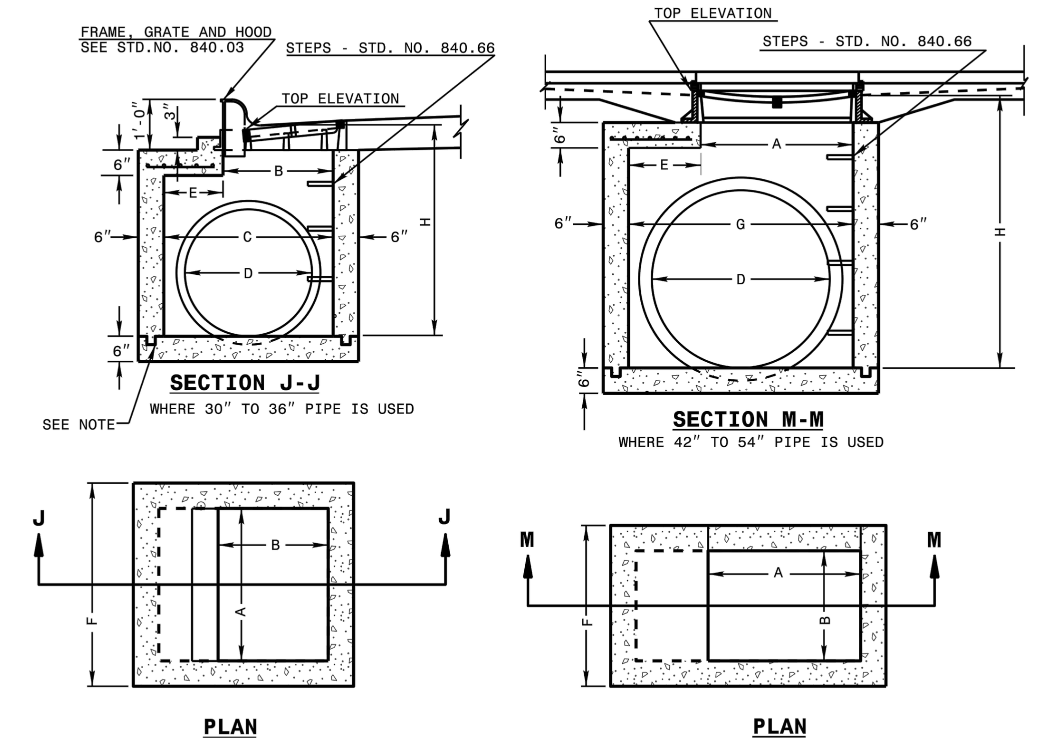

1-18 STATE OF NORTH CAROLINA DEPT. OF TRANSPORTATION DIVISION OF HIGHWAYS RALEIGH, N.C.

ROADWAY STANDARD DRAWING FOR CONCRETE CATCH BASIN 12" THRU 54" PIPE

SHEET 1 OF 2
840.02

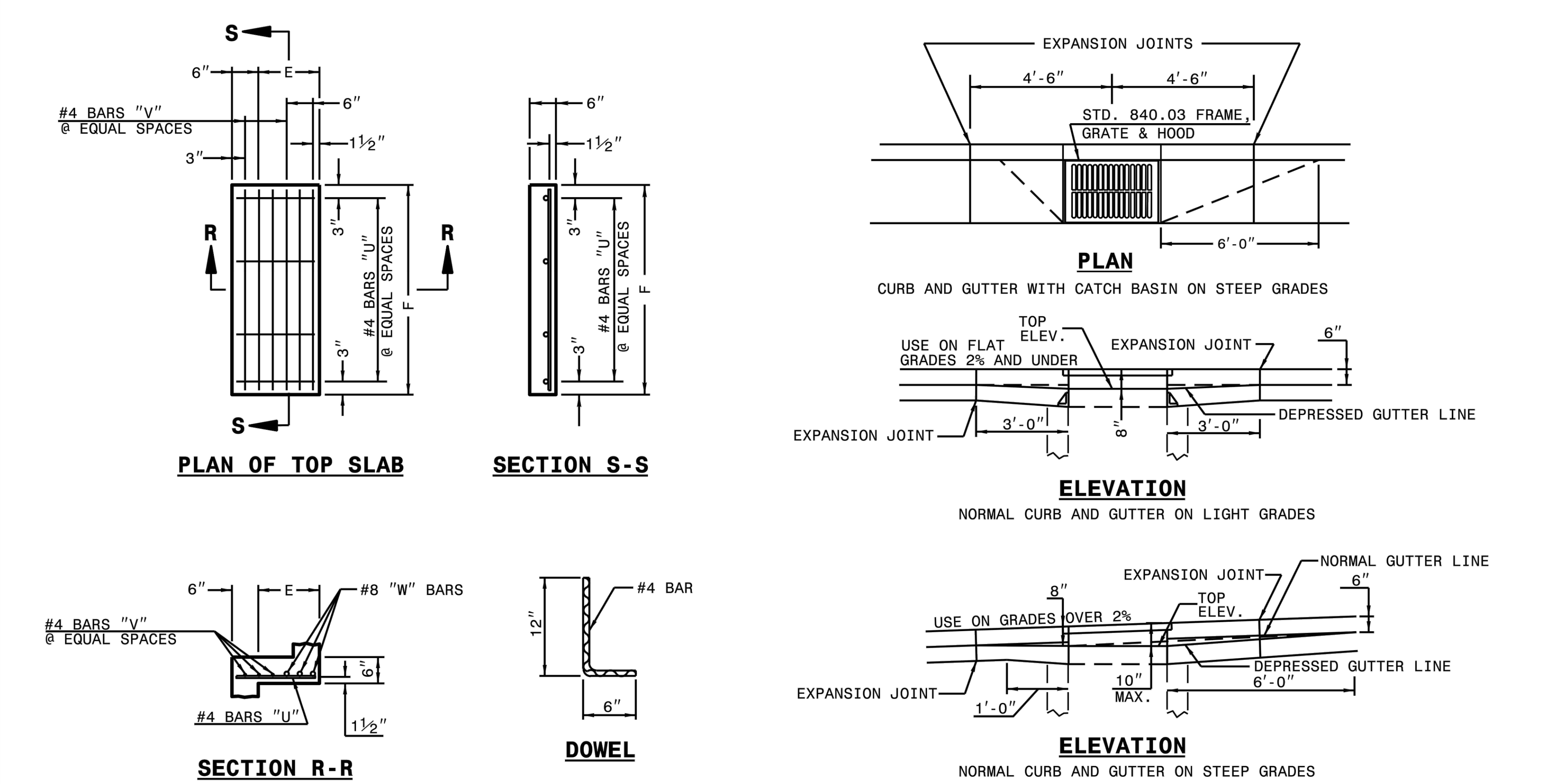

MINIMUM DIMENSIONS AND QUANTITIES FOR CONCRETE CATCH BASIN(BASED ON MIN. HEIGHT, H, WITH NO RISER) *																			
DIMENSIONS OF BOX AND PIPE						COVER DIMENSION									CU.YDS. CONC. IN BOX			DEDUCTIONS ONE PIPE	
PIPE	SPAN	WIDTH	WIDTH	SPAN	MIN. HEIGHT			BARS-U		BARS-V		BARS-W		TOTAL LBS.	TOP SLAB	BOTTOM SLAB	TOT. CONC. FOR MINIMUM HEIGHT, H		
D	A	B	C	G	H	E	F	NO.	LENGTH	NO.	LENGTH	NO.	LENGTH					C.M.	R.C.
12"	3'-0"	2'-2"	--	--	2'-9"	--	--	--	--	--	--	--	--	--	--	0.235	0.772	0.015	0.026
15"	3'-0"	2'-2"			3'-0"											0.235	0.829	0.023	0.036
18"	3'-0"	2'-2"			3'-3"											0.235	0.887	0.033	0.049
24"	3'-0"	2'-2"			3'-9"											0.235	1.001	0.059	0.085
30"	3'-0"	2'-2"	3'-4"		4'-3"	1'-2"	4'-0"	4	1'-5"	2	3'-9"	3	3'-9"	39	0.123	0.321	1.433	0.092	0.127
36"	3'-0"	2'-2"	3'-10"		4'-9"	1'-8"	4'-0"	4	1'-11"	3	3'-9"	3	3'-9"	43	0.161	0.358	1.714	0.132	0.178
42"	3'-0"	2'-2"		4'-5"	5'-3"	1'-5"	3'-2"	4	1'-8"	2	2'-11"	3	2'-11"	32	0.112	0.318	1.738	0.180	0.243
48"	3'-0"	2'-2"		5'-0"	5'-9"	2'-0"	3'-2"	4	2'-3"	3	2'-11"	3	2'-11"	35	0.145	0.352	2.052	0.235	0.317
54"	3'-0"	2'-2"		5'-7"	6'-3"	2'-7"	3'-2"	4	2'-10"	5	2'-11"	3	2'-11"	41	0.180	0.386	2.387	0.297	0.401

* RISER HAS .228 CUBIC YARDS OF CONCRETE PER FOOT HEIGHT

1-18 STATE OF NORTH CAROLINA DEPT. OF TRANSPORTATION DIVISION OF HIGHWAYS RALEIGH, N.C.

ROADWAY STANDARD DRAWING FOR CONCRETE CATCH BASIN 12" THRU 54" PIPE

SHEET 2 OF 2
840.02

NOTE: USE TYPE "E", "F" AND "G" GRATE UNLESS OTHERWISE NOTED.

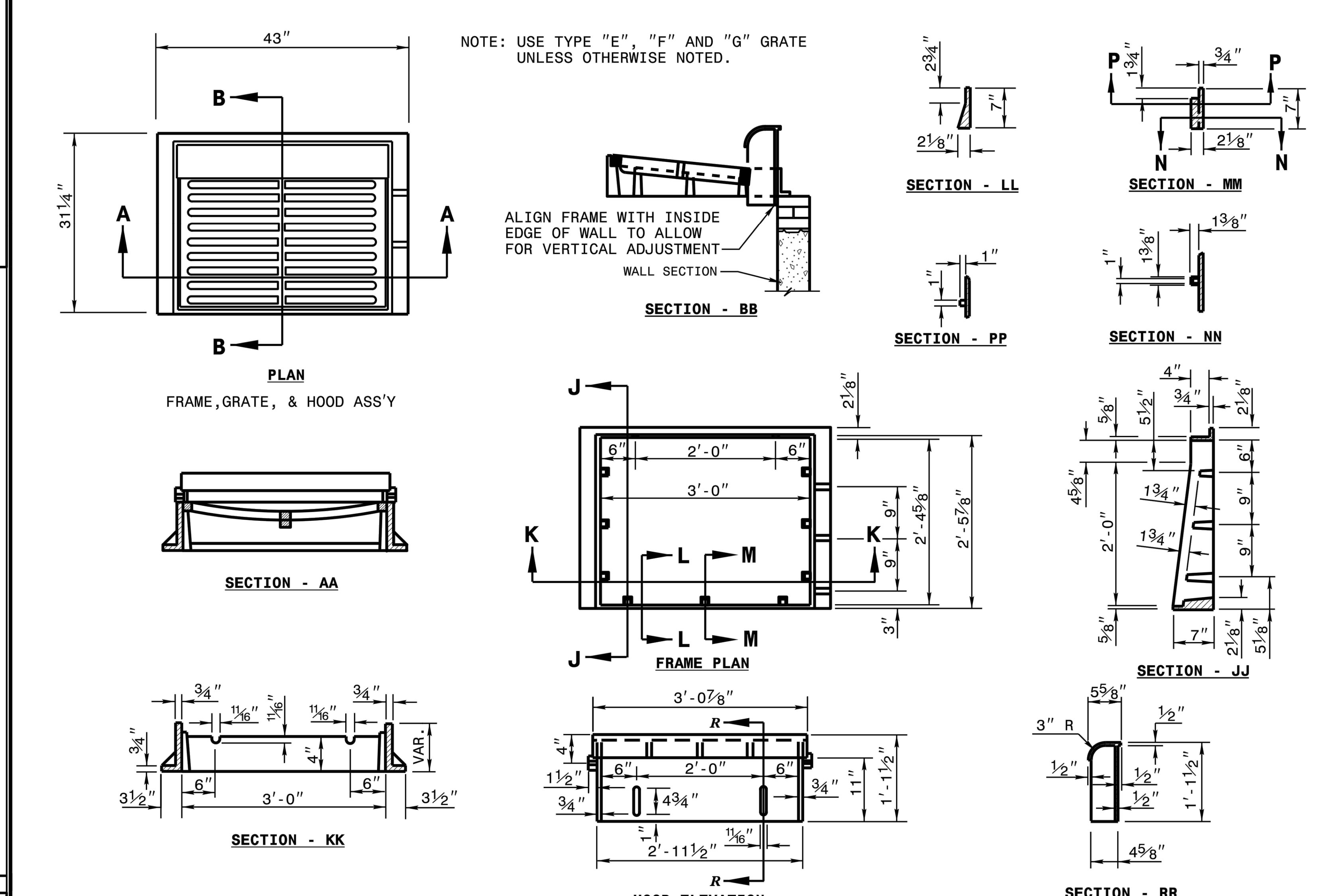

1-18 STATE OF NORTH CAROLINA DEPT. OF TRANSPORTATION DIVISION OF HIGHWAYS RALEIGH, N.C.

ROADWAY STANDARD DRAWING FOR FRAME, GRATES, AND HOOD FOR USE ON STANDARD CATCH BASIN

SHEET 1 OF 2
840.03

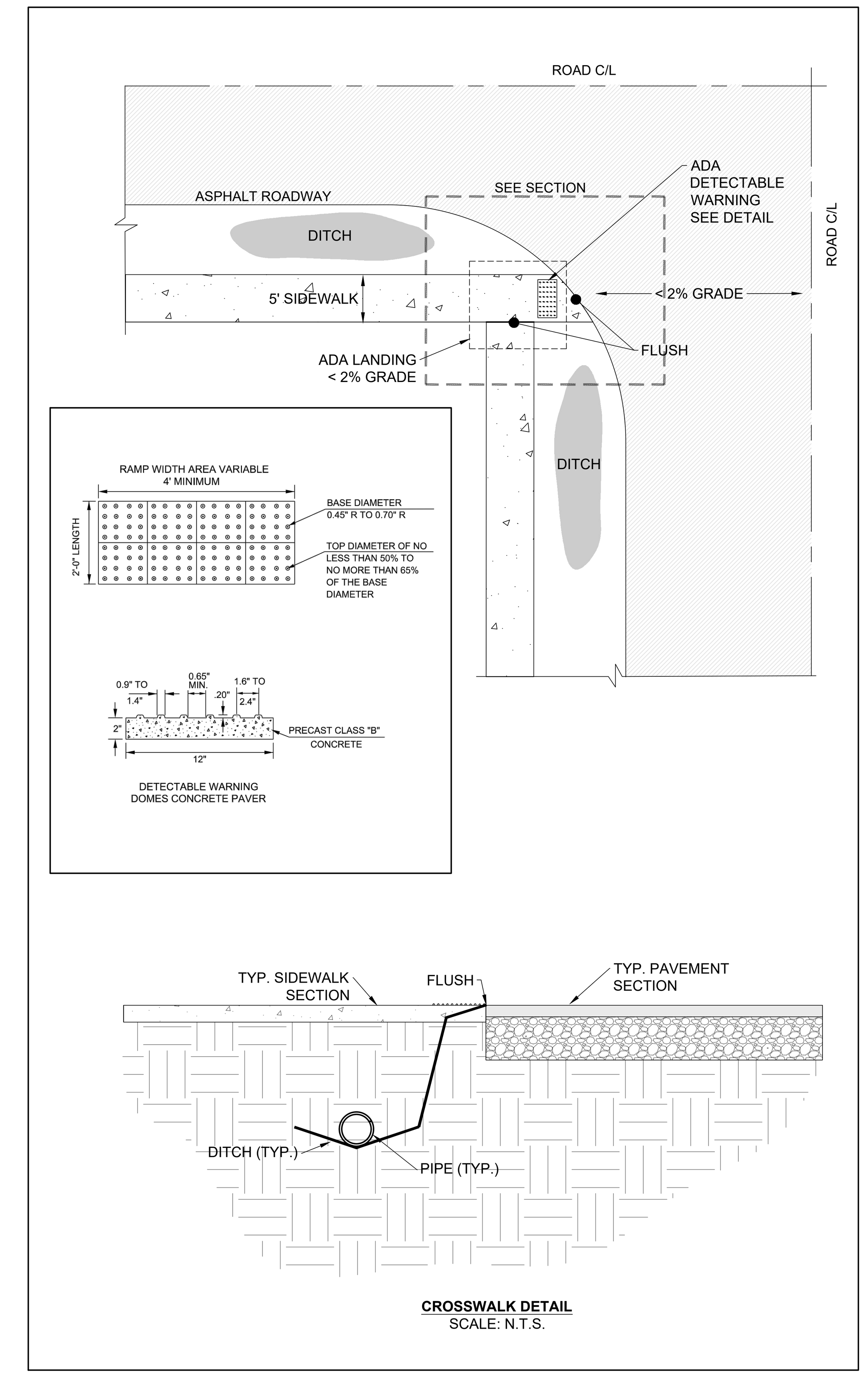

CROSSWALK DETAIL
SCALE: N.T.S.

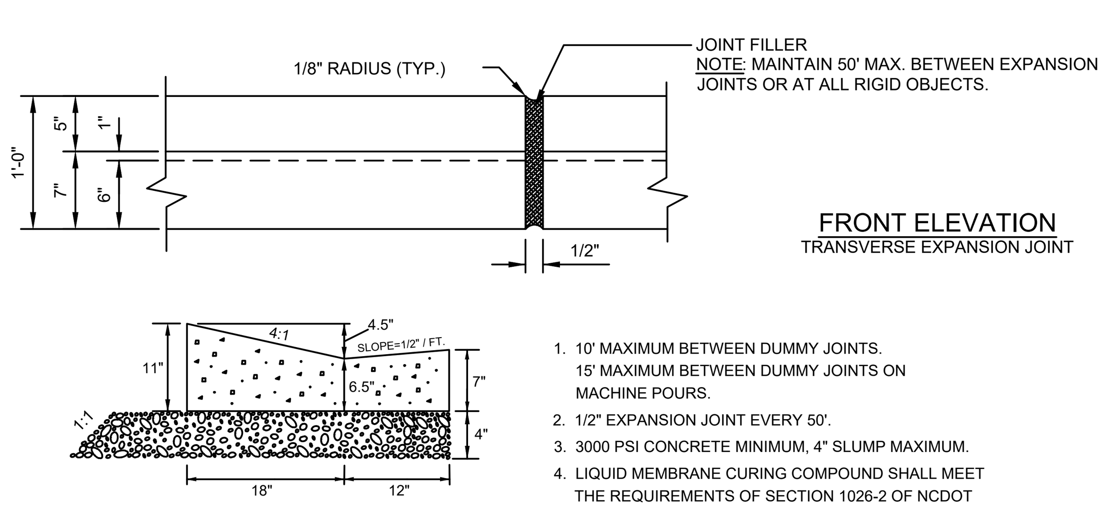

FRONT ELEVATION
TRANSVERSE EXPANSION JOINT

2. 30" VALLEY TYPE GUTTER

1. 10' MAXIMUM BETWEEN DUMMY JOINTS. 15' MAXIMUM BETWEEN DUMMY JOINTS ON MACHINE POURS.
2. 1/2" EXPANSION JOINT EVERY 50'.
3. 3000 PSI CONCRETE MINIMUM, 4" SLUMP MAXIMUM.
4. LIQUID MEMBRANE CURING COMPOUND SHALL MEET THE REQUIREMENTS OF SECTION 1026-2 OF NCDOT STANDARDS & SPECIFICATIONS FOR ROADS AND STRUCTURES.
5. ALL CONSTRUCTION JOINTS SHALL BE FILLED WITH JOINT FILLER AND SEALER IN ACCORDANCE WITH NCDOT ROADWAY STANDARD DETAIL 846.01 THE JOINT MATERIAL SHALL CONFORM TO SECTION 1028-2 OF NCDOT STANDARD & SPECIFICATIONS FOR ROADS AND STRUCTURES.
6. REFER TO NCDOT DETAIL 846.01 FOR CURB AND GUTTER SUPERELEVATION RATES.

CURB AND GUTTER
T-10.26.1

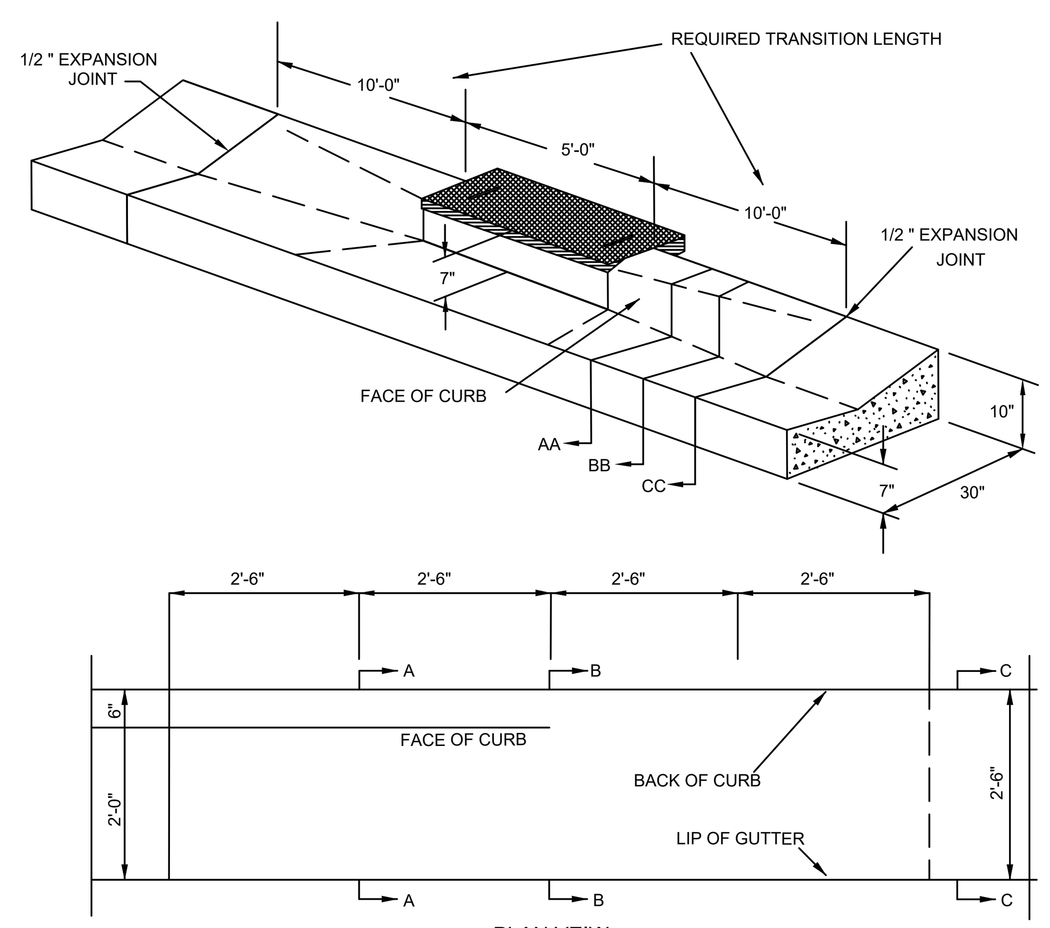

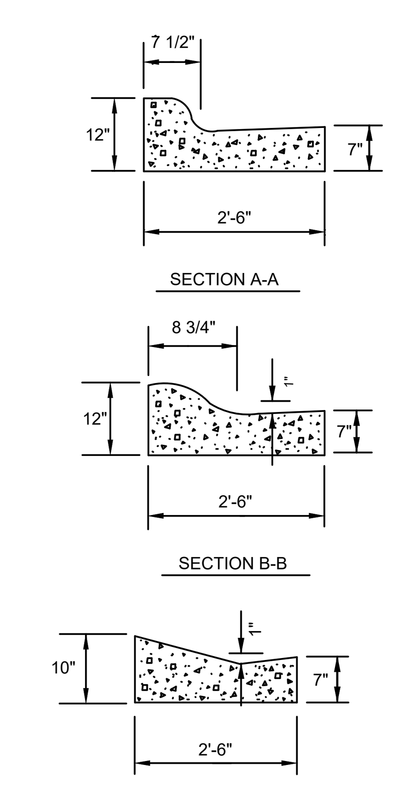

NOTES:
TRANSITION NOT TO BE LOCATED WITHIN THE CURB RADIUS.

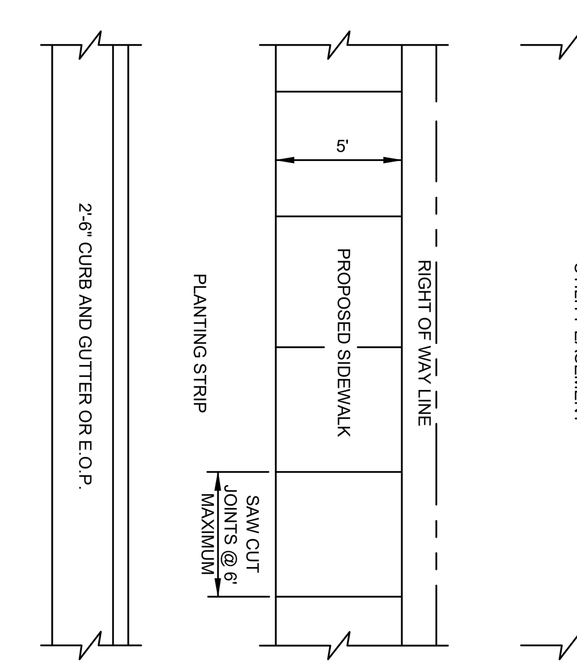

PLAN VIEW

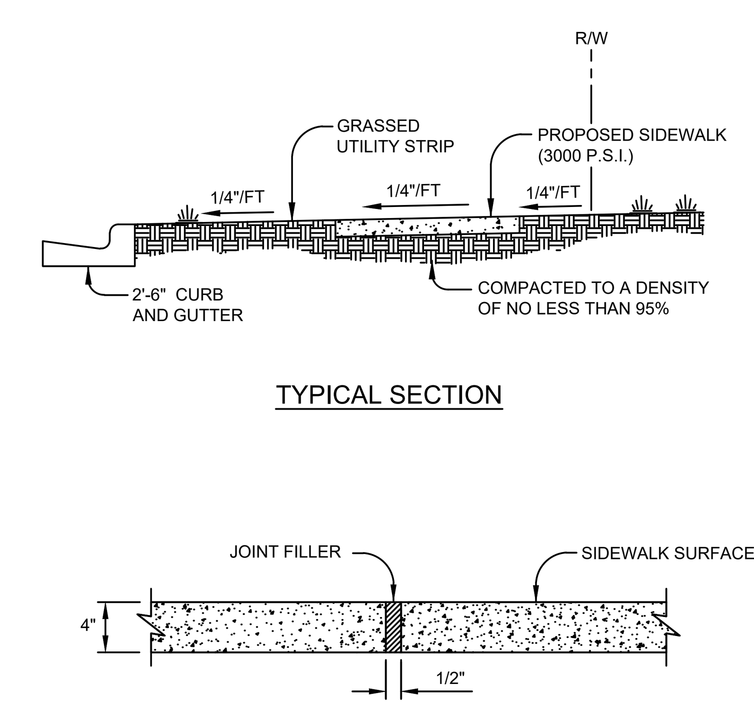

TRANSVERSE EXPANSION JOINT

NOTES:
1. TRANSVERSE EXPANSION JOINTS TO BE A MAXIMUM OF 50 FEET.
2. ALL CONCRETE TO BE 3000 PSI AND FINISHED WITH CURING COMPOUND.
3. A 6 INCH DEPTH IS REQUIRED AT LOCATIONS OF DRIVEWAY CROSSINGS, AT STREET INJTERSECTIONS (ALONG THE LENGTH OF RADIUS CURB RETURNS), AND IN THE HANDICAP RAMPS.

CONCRETE SIDEWALK
T-30.01

REV	DESCRIPTION	DATE
03	CONSTRUCTION DOCUMENTS 3rd SUBMITTAL	06/17/2020
02	CONSTRUCTION DOCUMENTS 2nd SUBMITTAL	04/15/2020
01	CONSTRUCTION DOCUMENTS 1st SUBMITTAL	01/13/2020

REVISIONS

Bateman Civil Survey Company
Engineers • Surveyors • Planners
2524 Reliance Avenue, Apex, North Carolina 27539
Phone: 919.577.1080 Fax: 919.577.1081
NCBELS FIRM No. C-2378

CHANDLER'S RIDGE
CONSTRUCTION DOCUMENTS
CONSERVATION SUBDIVISION
410 W. YOUNG ST.
ROLESVILLE, NC
WAKE COUNTY

SITE / NCDOT DETAILS

Project Engineer:	TSS
Designed By:	TEP
Drawn By:	TEP
Checked By:	TSS
Scale:	
Date:	06/17/2020
Project Number:	P170347

SHEET
C900

P:\2017 Projects\170347 Chanders Ridge\Eng\CAD\DWG\TP SHEETP_170347_C900_SITE_DETAILS.dwg

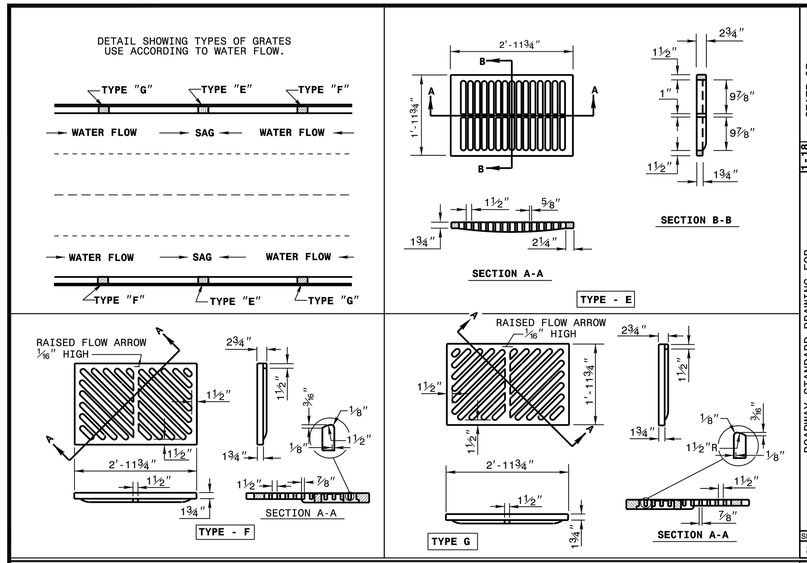

STATE OF NORTH CAROLINA
DEPT. OF TRANSPORTATION
DIVISION OF HIGHWAYS
RALEIGH, N.C.

1-18

ROADWAY STANDARD DRAWING FOR
FRAME, GRATES, AND HOOD
FOR USE ON STANDARD CATCH BASIN

SHEET 2 OF 2
840.03

NOTES:
INSTALL ALL STEPS PROTRUDING 4" FROM INSIDE FACE OF STRUCTURE WALL.
STEPS DIFFERING IN DIMENSIONS, CONFIGURATION, OR MATERIALS FROM THOSE SHOWN MAY ALSO BE USED PROVIDED THE CONTRACTOR HAS FURNISHED THE ENGINEER WITH DETAILS OF THE PROPOSED STEPS AND HAS RECEIVED WRITTEN APPROVAL FROM THE ENGINEER FOR THE USE OF SUCH STEPS.

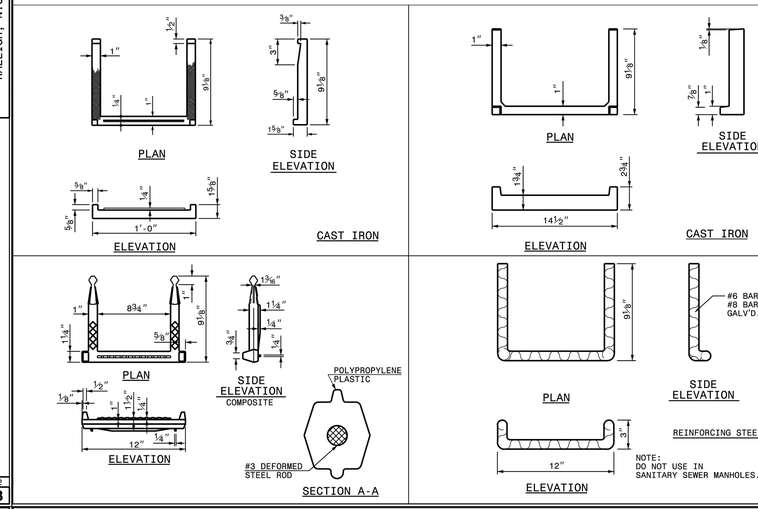

STATE OF NORTH CAROLINA
DEPT. OF TRANSPORTATION
DIVISION OF HIGHWAYS
RALEIGH, N.C.

1-18

ROADWAY STANDARD DRAWING FOR
DRAINAGE STRUCTURE STEPS

SHEET 1 OF 1
840.66

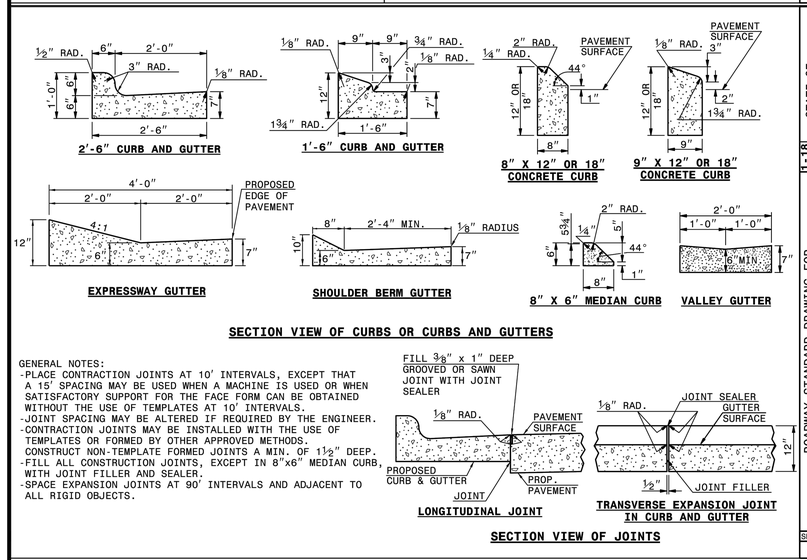

STATE OF NORTH CAROLINA
DEPT. OF TRANSPORTATION
DIVISION OF HIGHWAYS
RALEIGH, N.C.

1-18

ROADWAY STANDARD DRAWING FOR
CONCRETE CURB, GUTTER AND CURB & GUTTER

SHEET 1 OF 3
846.01

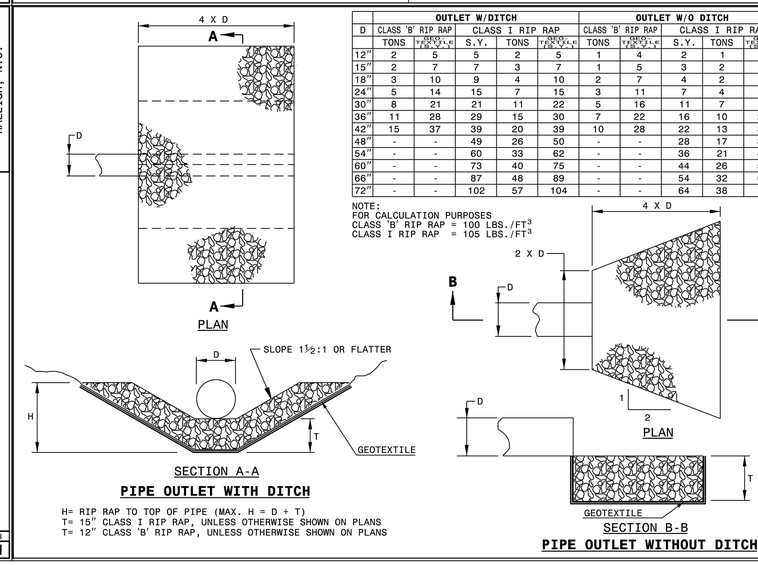

D	OUTLET W/DITCH					OUTLET W/O DITCH				
	CLASS 'B' RIP RAP		CLASS I RIP RAP			CLASS 'B' RIP RAP		CLASS I RIP RAP		
	TONS	THICKNESS FT.-IN.-U.S.	S.Y.	TONS	THICKNESS FT.-IN.-U.S.	TONS	THICKNESS FT.-IN.-U.S.	S.Y.	TONS	THICKNESS FT.-IN.-U.S.
12"	2	5	5	2	5	1	4	2	1	4
15"	2	7	7	3	7	1	5	3	2	6
18"	3	10	9	4	10	2	7	4	2	8
24"	5	14	15	7	15	3	11	7	4	12
30"	8	21	21	11	22	5	16	11	7	17
36"	11	28	29	15	30	7	22	16	10	23
42"	15	37	39	20	39	10	28	22	13	30
48"	-	-	49	26	50	-	-	28	17	38
54"	-	-	60	33	62	-	-	36	21	47
60"	-	-	73	40	75	-	-	44	26	56
66"	-	-	87	48	89	-	-	54	32	67
72"	-	-	102	57	104	-	-	64	38	78

NOTE:
FOR CALCULATION PURPOSES
CLASS 'B' RIP RAP = 100 LBS./FT^3
CLASS I RIP RAP = 105 LBS./FT^3

STATE OF NORTH CAROLINA
DEPT. OF TRANSPORTATION
DIVISION OF HIGHWAYS
RALEIGH, N.C.

1-18

ROADWAY STANDARD DRAWING FOR
GUIDE FOR RIP RAP AT PIPE OUTLETS

SHEET 1 OF 1
876.02

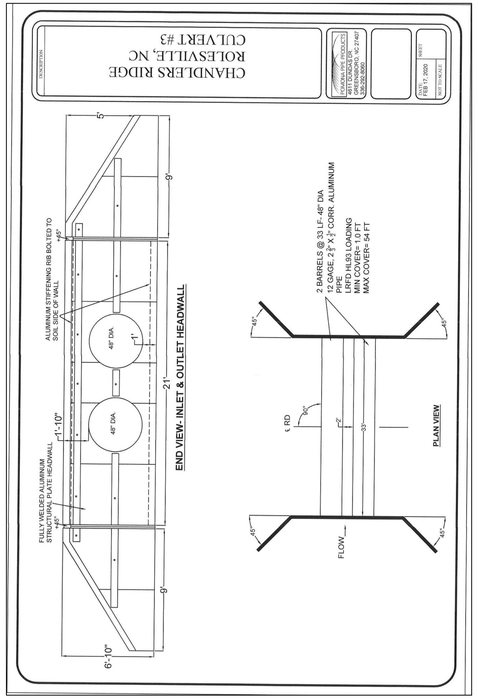

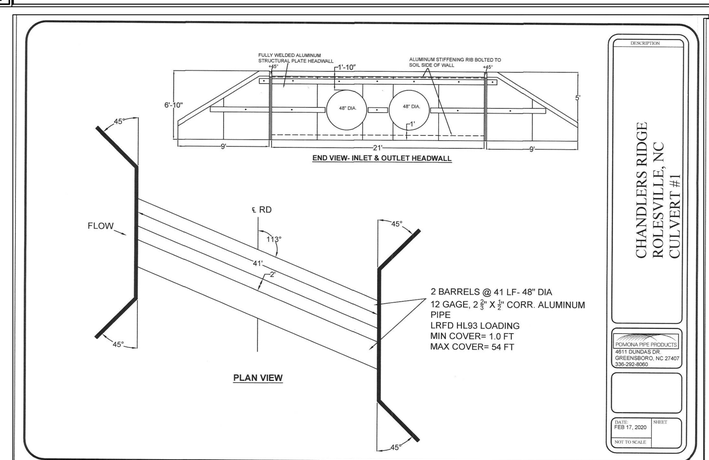

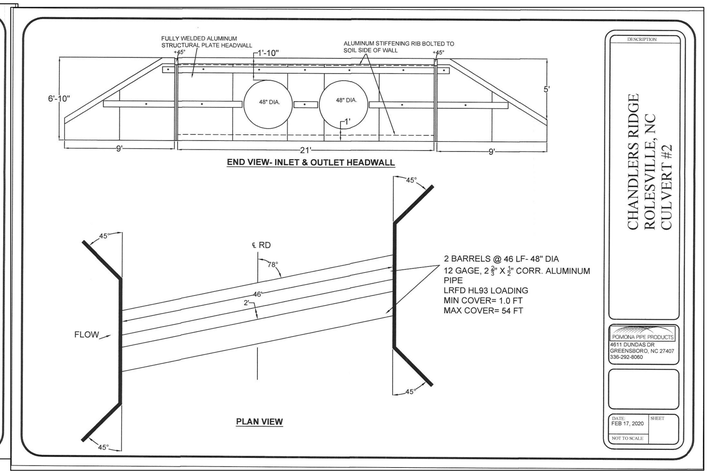

REV	DESCRIPTION	DATE
03	CONSTRUCTION DOCUMENTS 3rd SUBMITTAL	06/17/2020
02	CONSTRUCTION DOCUMENTS 2nd SUBMITTAL	04/15/2020
01	CONSTRUCTION DOCUMENTS 1st SUBMITTAL	01/13/2020

REVISIONS

P:\2017 Projects\170347 Chandlers Ridge\Eng\CAD\DWG\TP SHEET\P_170347_C900_SITE_DETAILS.dwg

NORTH CAROLINA PROFESSIONAL SEAL 20234 ENGINEER THOMAS S. SPOON, JR.

Bateman Civil Survey Company
Engineers • Surveyors • Planners
2524 Reliance Avenue, Apex, North Carolina 27539
Phone: 919.577.1080 Fax: 919.577.1081
NCBELS FIRM No. C-2378

CHANDLER'S RIDGE
CONSTRUCTION DOCUMENTS
CONSERVATION SUBDIVISION

410 W. YOUNG ST.
ROLESVILLE, NC
WAKE COUNTY

NCDOT DETAILS

Project Engineer:	TSS
Designed By:	TEP
Drawn By:	TEP
Checked By:	TSS
Scale:	
Date:	06/17/2020
Project Number:	P170347

SHEET
C901

CONTINUOUS LINES

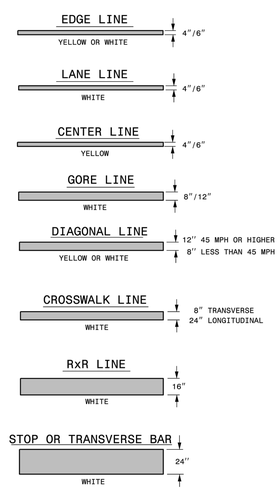

10'-30'/SP SKIP LINE

UNLESS OTHERWISED SHOWN, USE 10'-30'/SP SKIPS FOR SKIP LANE LINES AND SKIP CENTER LINES.

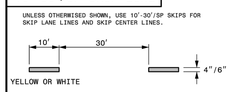

2'-6'/SP MINI-SKIP LINE

UNLESS OTHERWISED SHOWN, USE 2'-6'/SP MINI-SKIPS FOR LANE LINE EXTENSIONS THROUGH INTERSECTIONS, EDGE LINE EXTENSIONS THROUGH INTERSECTIONS AND MINI-SKIPS USED FOR BICYCLE LANE LINES.

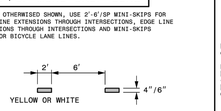

3'-3'/SP MINI-SKIP LINE

UNLESS OTHERWISED SHOWN, USE 3'-3'/SP MINI-SKIPS FOR THE WHITE EDGE LINE ENTENSIONS AT ROUNDABOUTS.

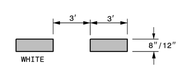

3'-9'/SP MINI-SKIP LINE

UNLESS OTHERWISED SHOWN, USE 3'-9'/SP MINI-SKIPS FOR MINI-SKIP LANE LINES AND LINE EXTENSIONS THROUGH TAPERS.

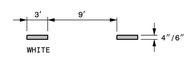

GENERAL NOTES:

1- USE 6" LANE, EDGE, AND CENTER LINES ON ALL FULL CONTROL OF ACCESS FACILITIES AND OTHER ROUTES AS DIRECTED BY THE ENGINEER.

2- LANE LINES INDICATED AS "WIDE" ON THE ROADWAY STANDARD DRAWINGS SHALL BE AT LEAST TWICE THE WIDTH OF THE NORMAL LINE.

3- GORE LINES SHALL BE TWICE THE WIDTH OF THE NORMAL LINE.

STATE OF NORTH CAROLINA
DEPT. OF TRANSPORTATION
DIVISION OF HIGHWAYS
RALEIGH, N.C.

1-18

ROADWAY STANDARD DRAWING FOR
PAVEMENT MARKINGS
LINE TYPES AND OFFSETS

SHEET 1 OF 2
1205.01

STRAIGHT ARROW

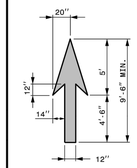

RIGHT OR LEFT TURN ARROW

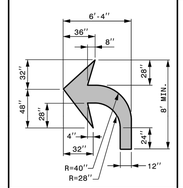

COMBINATION STRAIGHT AND LEFT OR RIGHT TURN ARROW

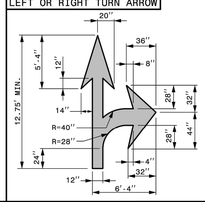

COMBINATION LEFT AND RIGHT TURN ARROW

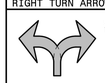

SAME DIMENSIONS APPLY AS FOR THE LEFT/RIGHT TURN ARROW

COMBINATION LEFT AND STRAIGHT AND RIGHT TURN ARROW

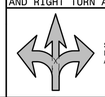

SAME DIMENSIONS APPLY AS FOR THE COMBINATION STRAIGHT AND LEFT/RIGHT TURN ARROW

MERGE ARROW

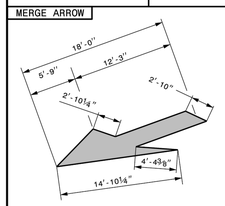

ELONGATED STRAIGHT ARROW

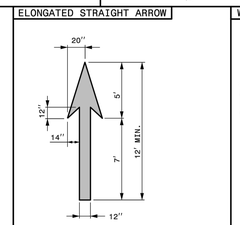

WRONG-WAY RAMP ARROW

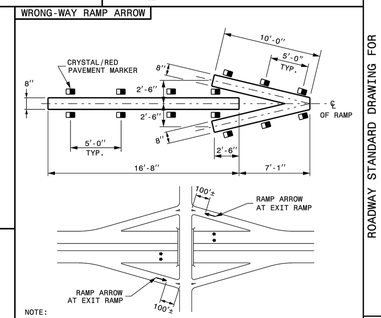

GENERAL NOTES:

1- USE THE COLOR WHITE FOR ALL PAVEMENT MARKING SYMBOLS.

2- DO NOT LOCATE PAVEMENT MARKING SYMBOLS AS TO ENCROACH INTO INTERSECTION AREAS.

3- DO NOT PLACE SYMBOLS ACROSS TRANSVERSE EXPANSION JOINTS ON PORTLAND CEMENT CONCRETE PAVEMENTS, UNLESS APPROVED BY THE ENGINEER.

4- CONFORM ALL SYMBOLS TO THE FHWA "STANDARD HIGHWAY SIGNS" MANUAL WHICH INCLUDES PAVEMENT MARKINGS AND STANDARD ALPHABETS (REFER TO SHEETS 6 THRU 9); DIMENSIONS CAN VARY AMONG MANUFACTURERS, THEREFORE SLIGHT VARIANCES ARE ACCEPTABLE. HOWEVER, ALL SYMBOLS ARE REQUIRED TO BE APPROVED BY THE DEPARTMENT.

NOTE:

1- WHEN INSTALLING COLD APPLIED PLASTIC ON CONCRETE, IT IS RECOMMENDED TO USE COLD APPLIED PLASTIC WITH A BLACK CONTRASTING BOLDER.

STATE OF NORTH CAROLINA
DEPT. OF TRANSPORTATION
DIVISION OF HIGHWAYS
RALEIGH, N.C.

1-18

ROADWAY STANDARD DRAWING FOR
PAVEMENT MARKINGS
SYMBOLS AND WORD MESSAGES

SHEET 1 OF 9
1205.08

REV	DESCRIPTION	DATE
03	CONSTRUCTION DOCUMENTS 3rd SUBMITTAL	06/17/2020
02	CONSTRUCTION DOCUMENTS 2nd SUBMITTAL	04/15/2020
01	CONSTRUCTION DOCUMENTS 1st SUBMITTAL	01/13/2020

REVISIONS

P:\2017 Projects\170347 Chandlers Ridge\Eng\CAD\DWG\TP SHEET\P_170347_C900_SITE_DETAILS.dwg

NORTH CAROLINA PROFESSIONAL SEAL 20234 ENGINEER THOMAS S. SPOCHT, JR.

Bateman Civil Survey Company
Engineers • Surveyors • Planners
2524 Reliance Avenue, Apex, North Carolina 27539
Phone: 919.577.1080 Fax: 919.577.1081
NCBELS FIRM No. C-2378

CHANDLER'S RIDGE
CONSTRUCTION DOCUMENTS
CONSERVATION SUBDIVISION
410 W. YOUNG ST.
ROLESVILLE, NC
WAKE COUNTY

NCDOT
DETAILS

Project Engineer:	TSS
Designed By:	TEP
Drawn By:	TEP
Checked By:	TSS
Scale:	
Date:	06/17/2020
Project Number:	P170347

SHEET
C902

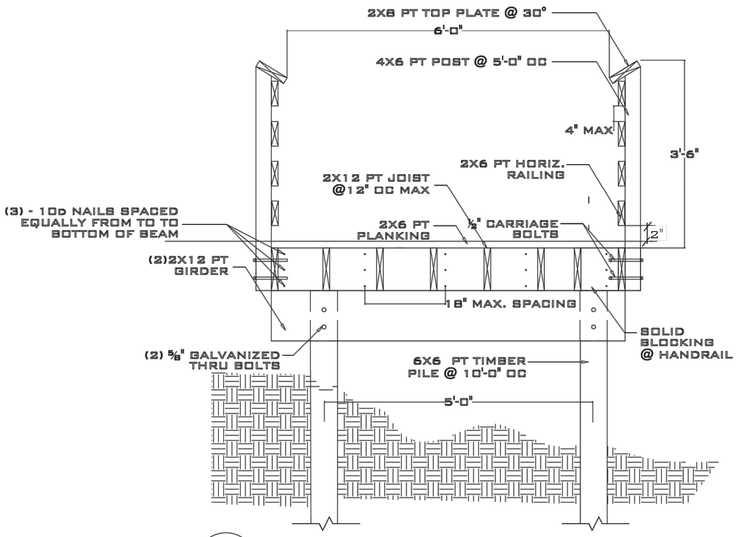

1 BOARDWALK SECTION

SCALE: ¾" = 1'-0"

NOTE: PILES SHALL BE INSTALLED SUCH THAT THERE IS NO JURISDICTIONAL IMPACT TO THE EXISTING RIPARIAN STREAM AND ITS' BUFFERS.

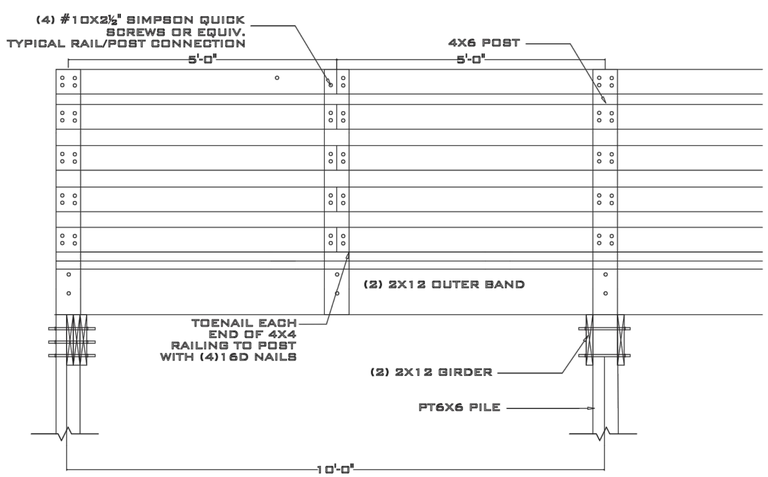

2 TYPICAL SECTION

SCALE: ¾"=1'-0"

NOTE: PILES SHALL BE INSTALLED SUCH THAT THERE IS NO JURISDICTIONAL IMPACT TO THE EXISTING RIPARIAN STREAM AND ITS' BUFFERS.

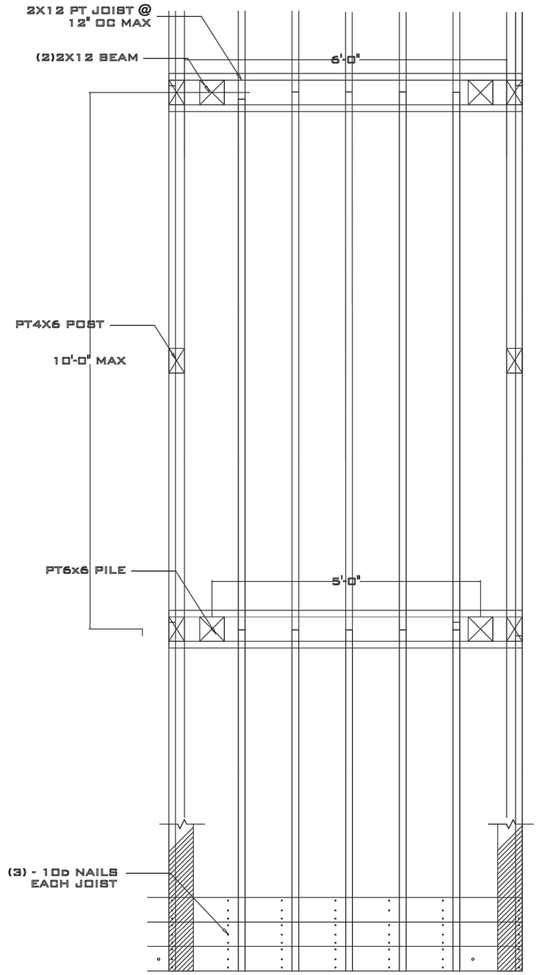

B PLAN VIEW

SCALE: ½"=1'-0"

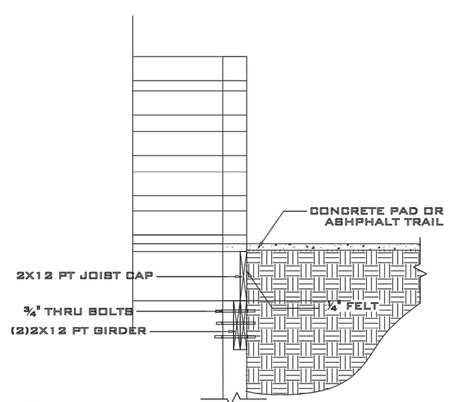

3 TYPICAL END SECTION

SCALE: ¾"=1'-0"

GENERAL NOTES:

GENERAL: ALL NOTES ARE FOR SUPPLEMENTING THE PLANS AND SPECIFICATIONS AND ARE IN NO WAY TO BE CONSIDERED AS EXCLUDING ANY ITEM IN THEM.

1. WOOD TO BE PRESSURE TREATED SOUTHERN YELLOW PINE (SYP)
BEAMS: NO.1 OR HIGHER
2. PRESERVATIVE PRESSURE TREATMENT TO BE IN ACCORDANCE WITH AWPA STANDARD M4-06 & U1-07 AND MEET THE FOLLOWING REQUIREMENTS:
DECKING, HANDRAILS AND JOISTS: UC3B
POST & PILES: UC4A
3. ALL FASTENERS AND HANGERS TO BE HOT DIPPED GALVANIZED (AT A MINIMUM)
4. FASTEN JOIST HANGERS PER MANUFACTURER'S SPECIFICATIONS:
(4) 10D COMMON NAILS TO JOIST
(4) 10D COMMON NAILS TO BEAM
5. DESIGN CRITERIA PER AASHTO:
LIVE LOAD: 85 PSF
DEAD LOAD: 20 PSF
SNOW LOAD: 15 PSF
WIND SPEED: 100 MPH
HORIZONTAL WIND: 35 PSF
VEHICLE LOAD: 5000 LBS
6. PROVIDE SOLID BLOCKING BETWEEN JOISTS AT POST LOCATIONS
7. ECONOMIC SUBSTITUTES MUST BE APPROVED BY ENGINEER OF RECORD
8. MINIMUM PILE PENETRATION SHALL BE 10'. SIZE AND PENETRATION ARE SUBJECT TO MODIFICATION BASED ON RECOMMENDATION OF GEOTECHNICAL REPORT PER 1803.5.5.
9. SITE SOIL PROPERTIES ARE ASSUMED TO SUPPORT FOUNDATION LOADS. CONTRACTOR SHALL PROVIDE GEOTECHNICAL REPORT BY PROFESSIONAL ENGINEER INDICATING SOIL PROPERTIES ARE SUFFICIENT TO SUPPORT ALL LOADS.

REV	DESCRIPTION	DATE
03	CONSTRUCTION DOCUMENTS 3rd SUBMITTAL	06/17/2020
02	CONSTRUCTION DOCUMENTS 2nd SUBMITTAL	04/15/2020
01	CONSTRUCTION DOCUMENTS 1st SUBMITTAL	01/13/2020

REVISIONS

Bateman Civil Survey Company
Engineers • Surveyors • Planners
2524 Reliance Avenue, Apex, North Carolina 27539
Phone: 919.577.1080 Fax: 919.577.1081
NCBELS FIRM No. C-2378

CHANDLER'S RIDGE
CONSTRUCTION DOCUMENTS
CONSERVATION SUBDIVISION
410 W. YOUNG ST.
ROLESVILLE, NC
WAKE COUNTY

PEDESTRIAN BRIDGE DETAILS

Project Engineer:	TSS
Designed By:	TEP
Drawn By:	TEP
Checked By:	TSS
Scale:	
Date:	06/17/2020
Project Number:	P170347

SHEET

C903

P:\2017 Projects\170347 Chandlers Ridge\Eng\CAD\DWG\TP SHEET\P_170347_C900_SITE_DETAILS.dwg

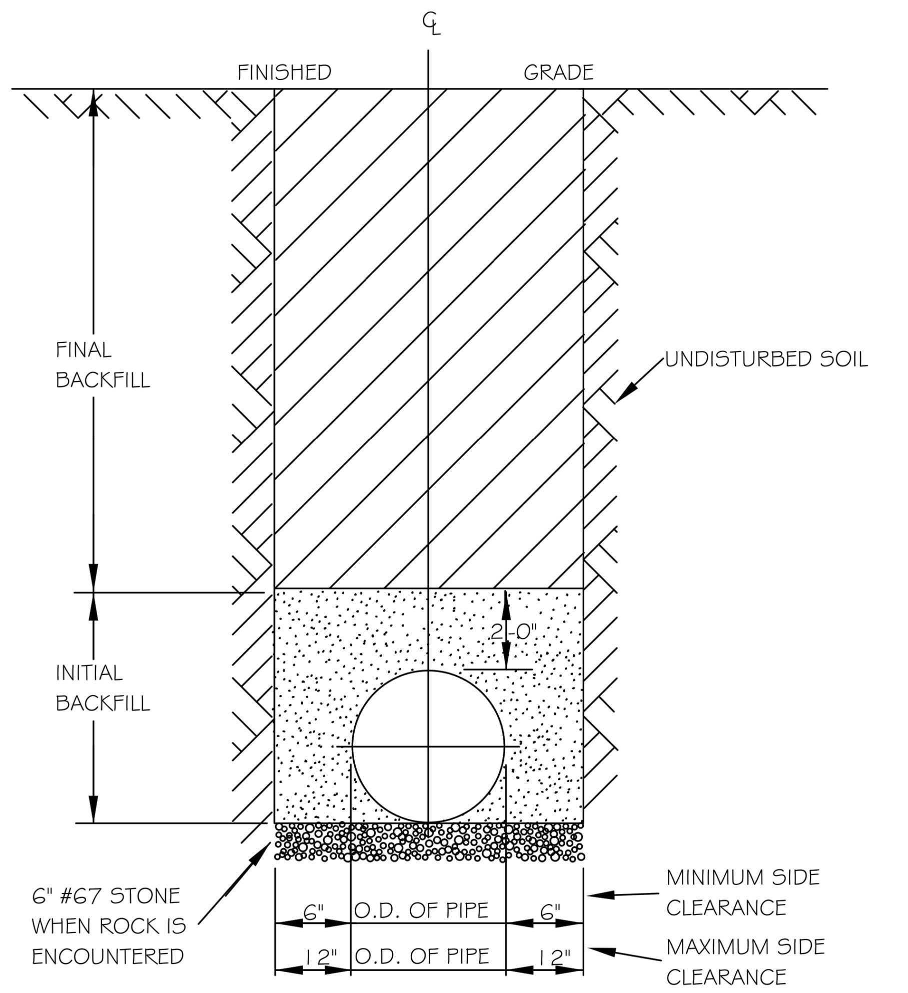

NOTES:
1. TRENCHES REQUIRING SHORING AND BRACING, DIMENSIONS SHALL BE TAKEN FROM THE INSIDE FACE OF THE SHORING AND BRACING.
2. NO ROCKS OR BOULDERS 4" OR LARGER TO BE USED IN INITIAL BACKFILL.
3. ALL BACKFILL MATERIAL SHALL BE SUITABLE NATIVE MATERIAL.
4. BACKFILL SHALL BE TAMPED IN 6" LIFTS IN TRAFFIC AREAS, 12" IN NON-TRAFFIC AREAS.
5. ACHIEVE 80% COMPACTION IN NON-TRAFFIC AREAS, AND 95% COMPACTION IN TRAFFIC AREAS.
6. IF IN EASEMENT 4" TOPSOIL, AND 12" CLEAN SELECT FILL MAY BE REQUIRED.
7. NO BOULDERS 8" IN DIAMETER OR GREATER ALLOWED IN FINAL BACKFILL.

CITY OF RALEIGH
DEPARTMENT OF PUBLIC UTILITIES
TRENCH BOTTOM DIMENSIONS & BACKFILLING REQUIREMENTS FOR DUCTILE IRON

DWG. NO.	REVISIONS	DATE	REVISIONS	DATE
S-4	D.W.C.	9-3-99		
	RRH	3-30-00		

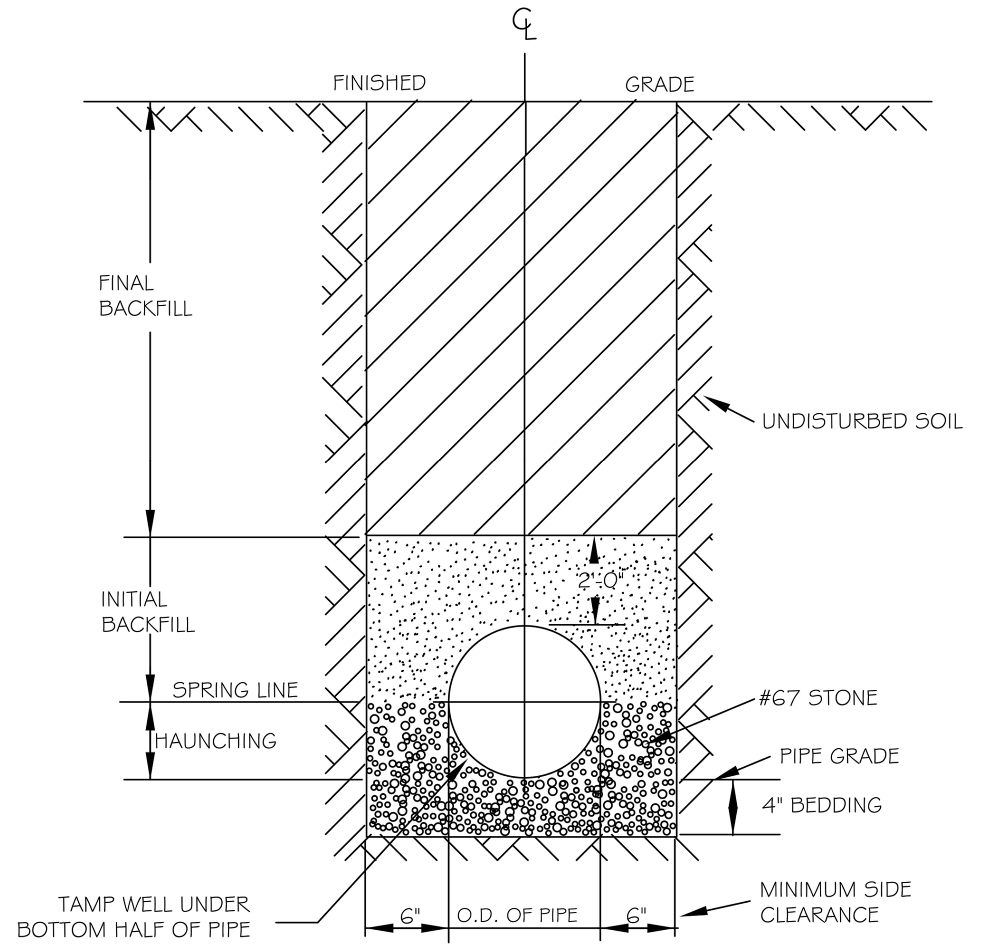

TYPICAL TRENCH BOTTOM DIMENSIONS FOR SDR 35 PVC GRAVITY PIPE

NOTES:
1. FOR TRENCHES REQUIRING SHORING AND BRACING, DIMENSIONS SHALL BE TAKEN FROM THE INSIDE FACE OF THE SHORING AND BRACING.
2. NO ROCKS OR BOULDERS 4" OR LARGER TO BE USED IN INITIAL BACKFILL.
3. ALL BACKFILL MATERIAL SHALL BE SUITABLE NATIVE MATERIAL.
4. BACKFILL SHALL BE TAMPED IN 6" LIFTS IN TRAFFIC AREAS, 12" IN NON-TRAFFIC AREAS.

CITY OF RALEIGH
DEPARTMENT OF PUBLIC UTILITIES
TRENCH BOTTOM DIMENSIONS AND BACKFILLING REQUIREMENTS FOR PVC GRAVITY SEWER MAIN

DWG. NO.	REVISIONS	DATE	REVISIONS	DATE
S-5	TO NOTES	3-1-87	D.W.C.	9-3-99
		7-2-82	RRH	3-30-00

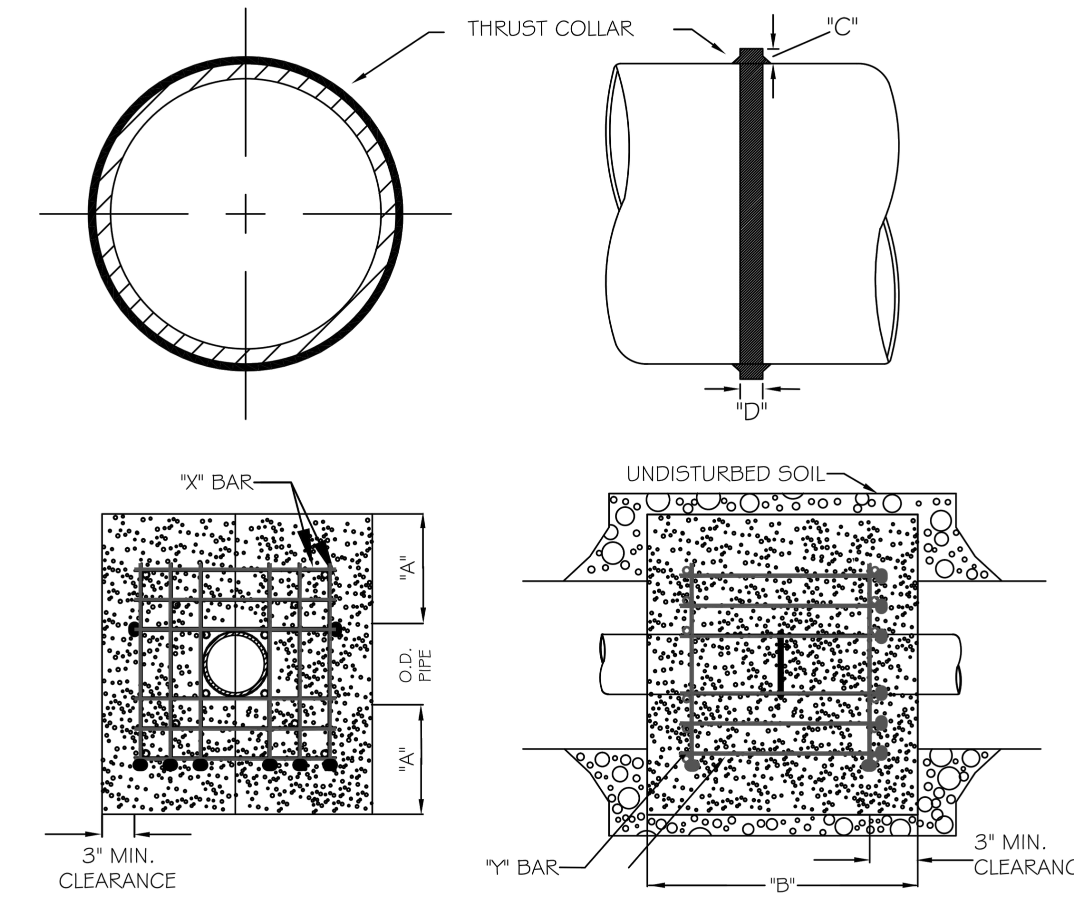

REINFORCING REQUIREMENTS

I.D. PIPE	REBAR SIZE	"X" BAR LENGTH	"X" BAR WEIGHT	"Y" BAR LENGTH	"Y" BAR WEIGHT	NO. REQUIRED
6" - 36"	#5	2'-2"+ O.D. PIPE	1.043 LBS/FT	1'-1"	1.1 LBS. EACH	X-24, Y-12
48" & greater	#6	3'-0"+ O.D. PIPE	1.502 LBS/FT	1'-3"	1.9 LBS. EACH	X-24, Y-12

THRUST COLLAR, AND THRUST SCHEDULE

I.D. PIPE	"A"	"B"	"C"	"D"
6" - 16"	1'-4"	1'-7"	2"	3/8"
20" - 24"	1'-4"	1'-7"	3"	1/2"
30" - 36"	1'-4"	1'-7"	4"	5/8"
48" & greater	1'-8"	1'-9"	6"	7/8"

NOTES:
1. CONCRETE SHALL BE 3000 PSI AND TRANSIT MIXED.
2. REINFORCING BARS SHALL BE DEFORMED AND TIED TOGETHER.
3. TRENCH BOTTOM WIDTH IN VICINITY OF THRUST BLOCK INSTALLATION SHALL BE THE MINIMUM WIDTH AS SHOWN ON STANDARD DETAIL W-3.
4. BACKFILL TAMPED IN 6" LIFTS PER STANDARD DETAIL W-3.
5. THRUST COLLAR MUST BE FACTORY WELDED ON BOTH SIDES ALONG BOTH EDGES OF COLLAR AROUND CIRCUMFERENCE.

CITY OF RALEIGH
DEPARTMENT OF PUBLIC UTILITIES
RESTRAINING COLLAR DESIGN DATA FOR SEWER FORCE MAIN

DWG. NO.	REVISIONS	DATE	REVISIONS	DATE
S-6	RRH	1-21-00		
	D.H.L.	6-18-08		

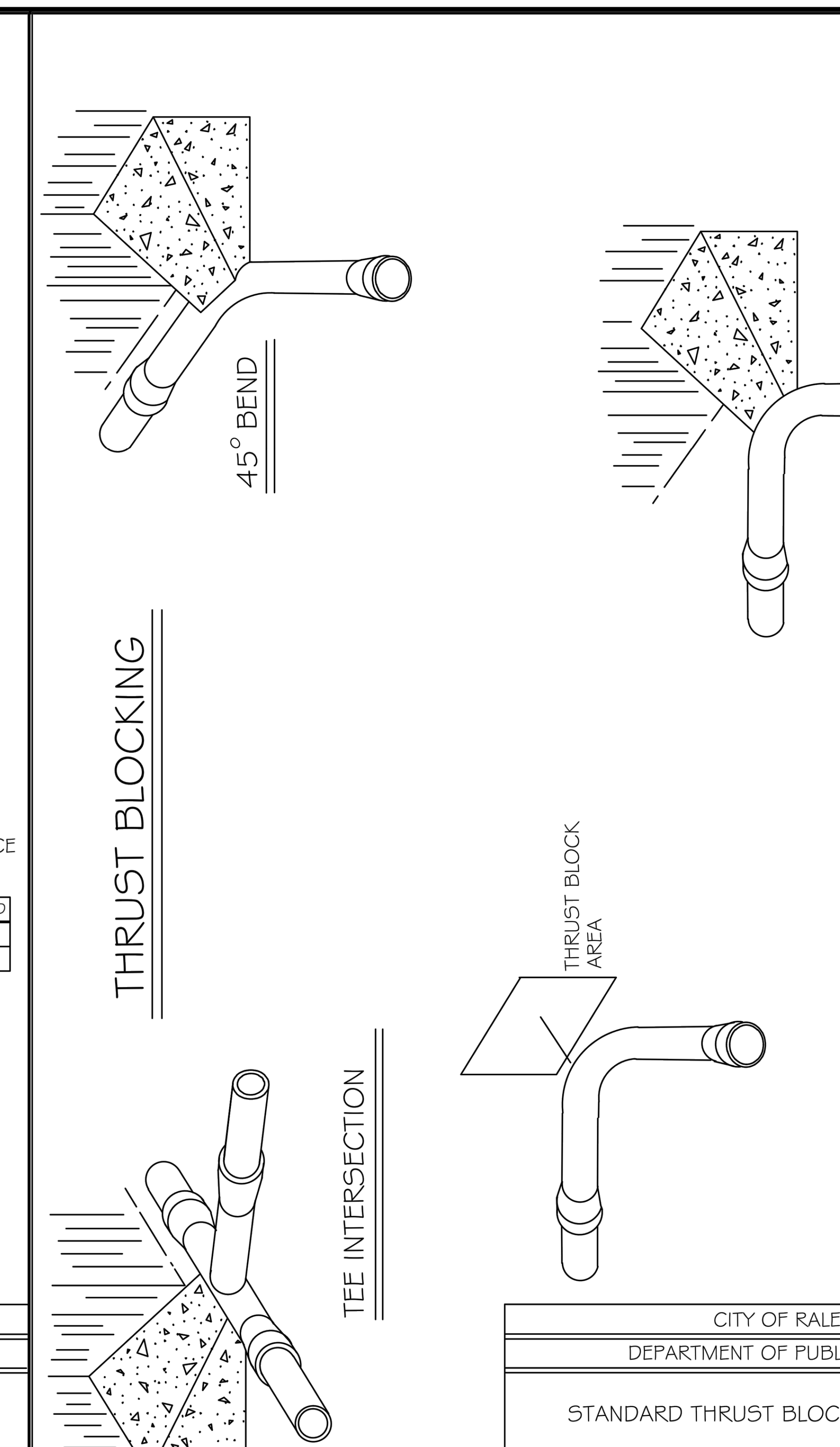

NOTES:
1. CONCRETE SHALL BE 3000 PSI
2. CONCRETE SHALL NOT CONTACT BOLTS OR ENDS OF MECHANICAL JOINT FITTINGS.
3. TRENCHES SHALL CONFORM TO STANDARD DETAIL W-3.
4. SEE STANDARD THRUST BLOCK TABLES, W-10 THRU W-11, FOR AREA OF CONCRETE REQUIRED.
5. ALL BENDS AND INTERSECTIONS SHALL HAVE CONCRETE THRUST BLOCKING.

CITY OF RALEIGH
DEPARTMENT OF PUBLIC UTILITIES
STANDARD THRUST BLOCKING VIEWS

DWG. NO.	REVISIONS	DATE	REVISIONS	DATE
S-7		3-1-87	RRH	3-31-00
	D.W.C.	9-7-99	D.H.L.	6-18-08

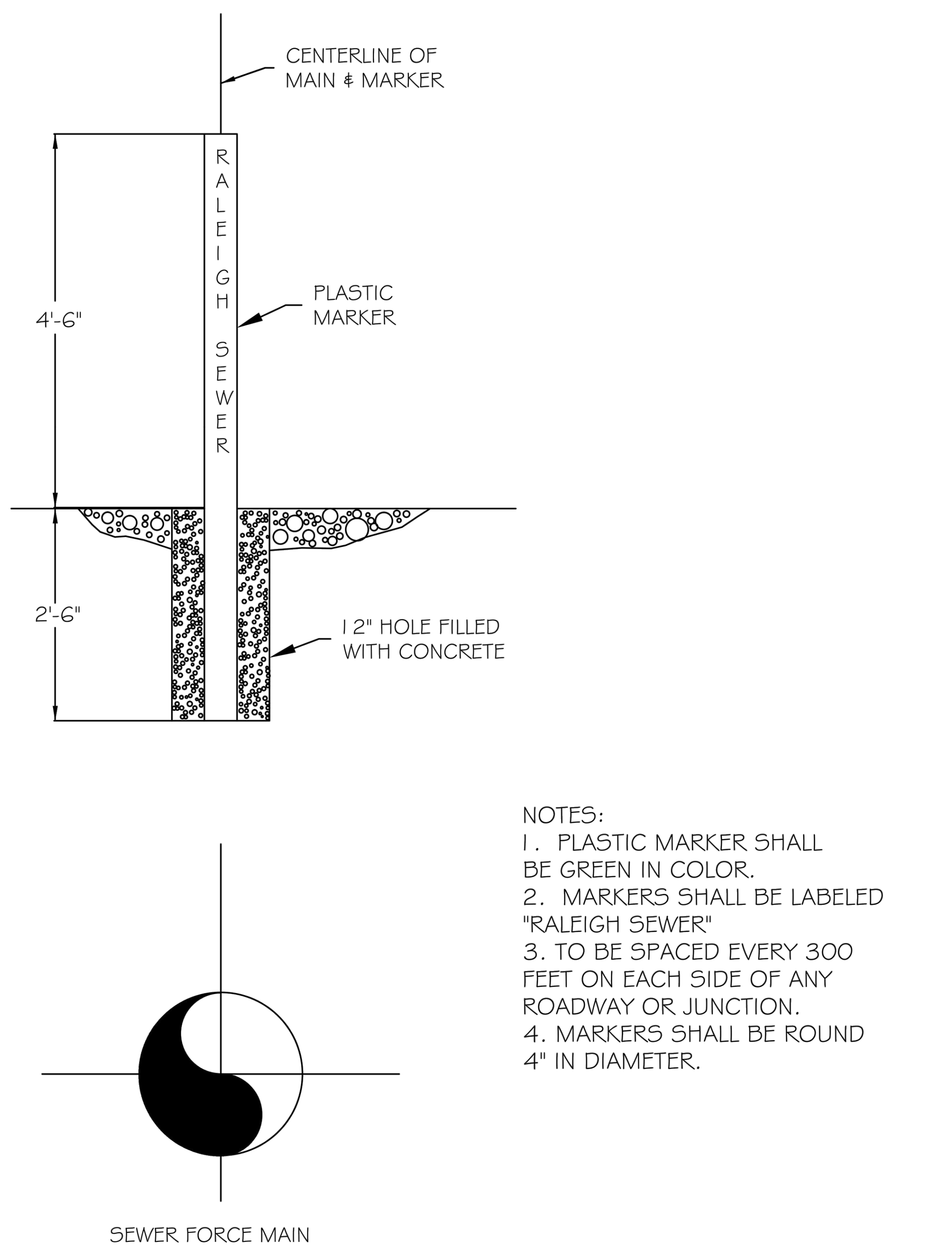

NOTES:
1. PLASTIC MARKER SHALL BE GREEN IN COLOR.
2. MARKERS SHALL BE LABELED "RALEIGH SEWER"
3. TO BE SPACED EVERY 300 FEET ON EACH SIDE OF ANY ROADWAY OR JUNCTION.
4. MARKERS SHALL BE ROUND 4" IN DIAMETER.

CITY OF RALEIGH
DEPARTMENT OF PUBLIC UTILITIES
STANDARD MAIN MARKER FOR SEWER FORCE MAINS IN EASEMENTS

DWG. NO.	REVISIONS	DATE	REVISIONS	DATE
S-8	RRH	1-21-00		
	DHL	6-18-08		

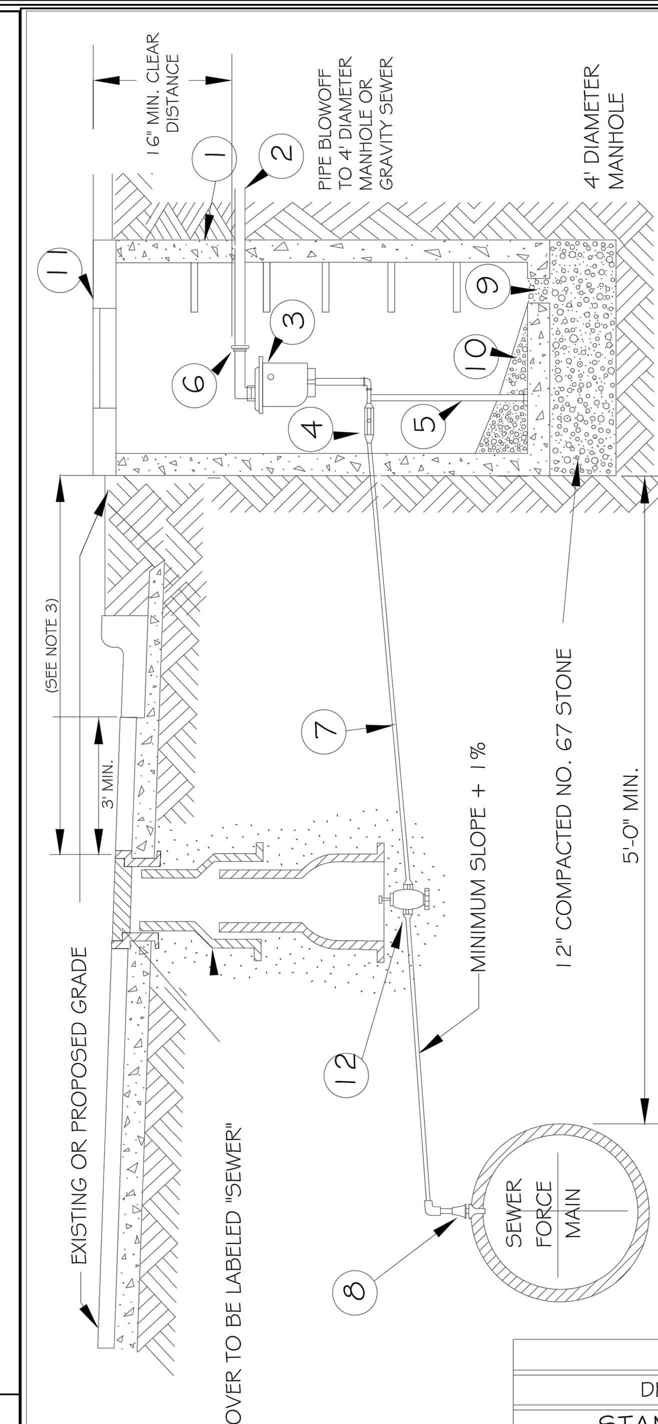

BILL OF MATERIALS

1	PRECAST MANHOLE W\ FLAT TOP
2	BLOW OFF PIPE SCD 80 PVC
3	2" AIR RELEASE VALVE
4	2"-SS BALL VALVE
5	PIPE STAND SUPPORT SS
6	2" UNION SCD 80 PVC
7	2" TYPE "K", SOFT COPPER WITH FLARED ELBOW
8	CORPORATION COCK
9	6" DIAMETER DRAIN
10	GROUT, 1/8" TO 1'-0" MIN. SLOPE TO DRAIN
11	36" x 30" HALLIDAY HATCH, ALUM.
12	2"-GATE VALVE

SEE STANDARD DETAIL S-4 & S-5 TO INSURE PROPER BACKFILL.

NOTE:
1. AIR RELEASE/VACUUM VALVE TO BE A.R.I. FLOW CONTROL MODEL SAAR SHORT VERSION D-025 SS (STAINLESS STEEL)
2. THE AIR RELEASE MANHOLE SHALL BE INSTALLED IN THE SHOULDER OR AS DIRECTED BY THE ENGINEER.
3. FOR MAINS LOCATED OUTSIDE OF STREET RIGHT-OF-WAYS THE MAXIMUM DISTANCE BETWEEN THE MANHOLE AND THE VALVE BOX SHOULD BE THREE (3) FEET.
4. MAIN SHALL BE DEEP ENOUGH TO ACCOMODATE INSTALLATION AS SHOWN

CITY OF RALEIGH
DEPARTMENT OF PUBLIC UTILITIES
STANDARD SEWER FORCE MAIN AIR RELEASE VALVE

DWG. NO.	REVISIONS	DATE	REVISIONS	DATE
S-9		7-14-82		12-31-91
	LBN	9-30-04	RRH	3-30-00

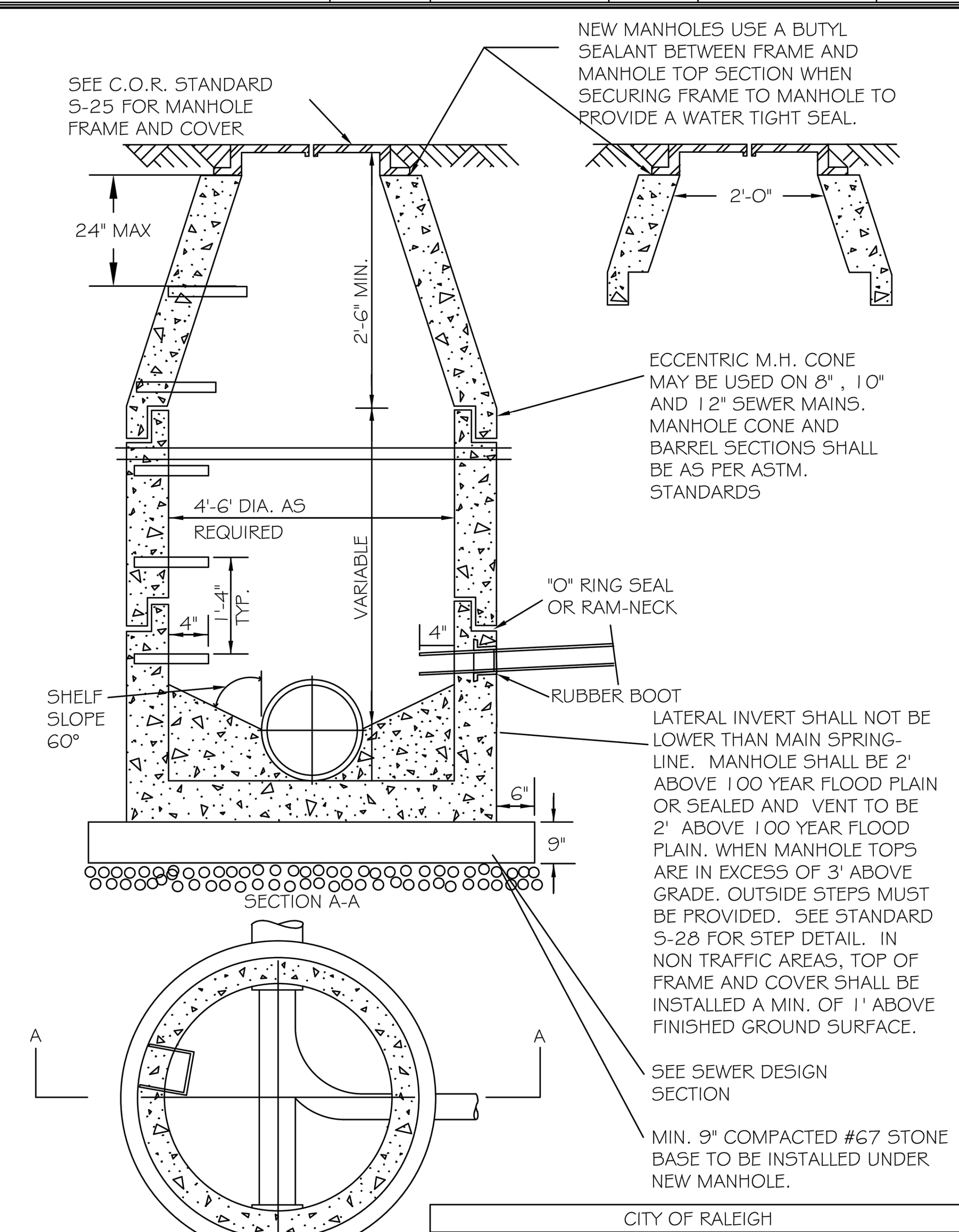

CITY OF RALEIGH
DEPARTMENT OF PUBLIC UTILITIES
STANDARD PRECAST SANITARY SEWER MANHOLE

DWG. NO.	REVISIONS	DATE	REVISIONS	DATE
S-20	Y.C.A.	12-31-92	ABB	2-21-05
	RRH	3-30-00	D.H.L.	6-16-08

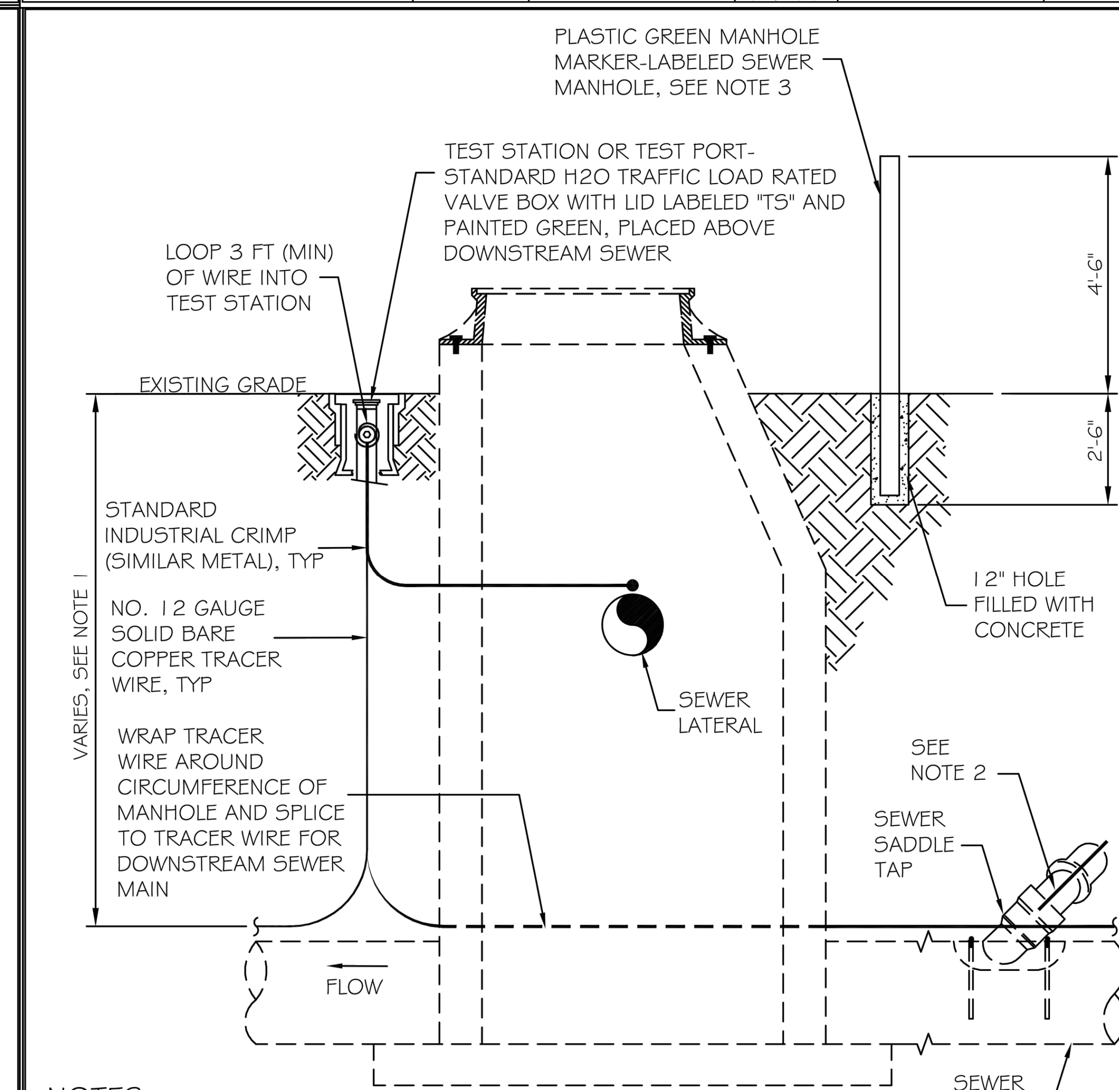

NOTES:
1. THE TRACER WIRE SHALL BE CONTINUOUS TO THE GREATEST EXTENT POSSIBLE. FOR GRAVITY MAIN AND OR LATERAL INSTALLATIONS LESS THAN 8 FT, THE TRACING WIRE SHALL BE ATTACHED TO THE PIPE. TRACER WIRE SHALL BE LAID FLAT AND SECURELY AFFIXED TO THE PIPE AT 10 FOOT INTERVALS. FOR GRAVITY MAIN AND OR LATERAL INSTALLATION DEEPER THAN 8 FT, THE TRACING WIRE SHALL BE INSTALLED AT A DEPTH OF 7-8 FT. THE WIRE SHALL BE PROTECTED FROM DAMAGE DURING THE EXECUTION OF THE WORK. NO BREAKS OF CUTS IN THE TRACER WIRE SHALL BE PERMITTED.
2. WHERE LATERAL TAPS ARE MADE BY SERVICE SADDLES, THE TRACER WIRE SHALL NOT BE ALLOWED TO TO BE PLACED BETWEEN THE SADDLE AND MAIN.
3. MANHOLE MARKERS SHALL BE PLACED ADJACENT TO MANHOLES AT THE DISCRETION OF OWNER OR OWNER'S REPRESENTATIVE.

CITY OF RALEIGH
DEPARTMENT OF PUBLIC UTILITIES
GRAVITY SEWER MAIN TRACER WIRE AND MANHOLE MARKER

DWG. NO.	REVISIONS	DATE	REVISIONS	DATE
S-20A	WKD	09-14		

Bateman Civil Survey Company
Engineers • Surveyors • Planners
2524 Reliance Avenue, Apex, North Carolina 27539
Phone: 919.577.1080 Fax: 919.577.1081
NCBELS FIRM No. C-2378

CHANDLER'S RIDGE
CONSTRUCTION DOCUMENTS
CONSERVATION SUBDIVISION
410 W. YOUNG ST.
ROLESVILLE, NC
WAKE COUNTY

CITY OF RALEIGH SEWER & FORCEMAIN DETAILS

Project Engineer:	TSS
Designed By:	TEP
Drawn By:	TEP
Checked By:	TSS
Scale:	
Date:	06/17/2020
Project Number:	P170347

SHEET
C910

REV	DESCRIPTION	DATE
03	CONSTRUCTION DOCUMENTS 3rd SUBMITTAL	06/17/2020
02	CONSTRUCTION DOCUMENTS 2nd SUBMITTAL	04/15/2020
01	CONSTRUCTION DOCUMENTS 1st SUBMITTAL	01/13/2020

REVISIONS

P:\2017 Projects\170347 Chandlers Ridge\Eng\CAD\DWG\TP SHEET\P_170347_C910_UTILITY_DETAILS.dwg

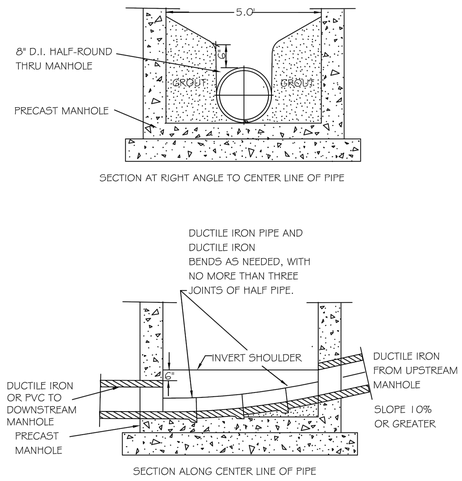

NOTE:
NO HORIZONTAL ALIGNMENT CHANGE CAN BE MADE WITH IN THIS MANHOLE TYPE. USE ON GRADES 10% OR GREATER.

CITY OF RALEIGH
DEPARTMENT OF PUBLIC UTILITIES
STANDARD HIGH VELOCITY MANHOLE INVERT

DWG. NO.	REVISIONS	DATE	REVISIONS	DATE
S-23		3-1-87	RRH	3-30-00
	Y.C.A.	12-31-91		

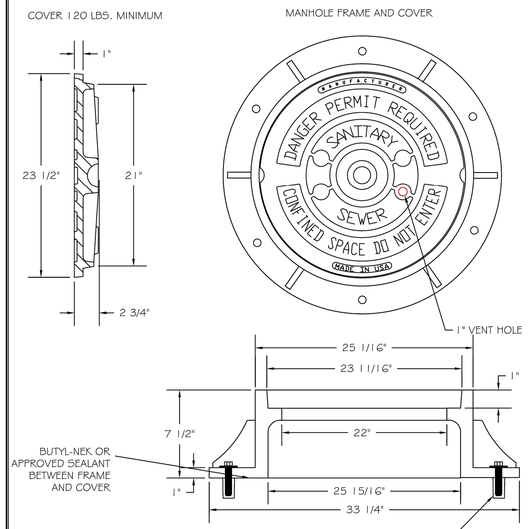

NOTES:
1) ALL MANHOLE FRAMES SHALL BE DOMESTICALLY CAST.
2) FRAME SHALL BE A MINIMUM WEIGHT OF 182 LBS. WITHIN PUBLIC ROW AND 160 LBS. WITHIN EASEMENTS.
3) COVER SHALL WEIGH A MIN. OF 120 LBS.
4) ALL MANHOLE FRAMES OUTSIDE OF PAVED SURFACES SHALL BE BOLTED TO THE CONE SECTION OR RING WITH A MINIMUM OF 4 BOLTS PER FRAME.

5/8"X3" LAGSHIELD IN HOLE DRILLED INTO CONE OR RING WITH ANCHOR SUNK TO DESIGN DEPTH, AND 3/8"X3" HOT DIPPED GALVANIZED LAG BOLT AND WASHER.

CITY OF RALEIGH
DEPARTMENT OF PUBLIC UTILITIES
STANDARD MANHOLE COVER

DWG. NO.	REVISIONS	DATE	REVISIONS	DATE
S-25	3-1-87	3-1-87	A.B.B.	2-9-05
	RRH	3-30-00	D.H.L.	6-18-08

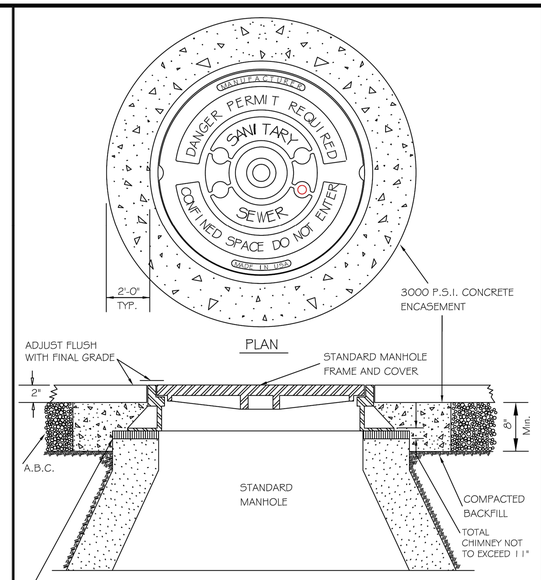

CITY OF RALEIGH
DEPARTMENT OF PUBLIC UTILITIES
STANDARD MANHOLE FRAME AND COVER DETAIL WITHIN PAVED SURFACES

DWG. NO.	REVISIONS	DATE	REVISIONS	DATE
S-29	Y.C.A.	12-31-91	ABB	9-20-04
	RRH	3-30-00	DHL	11-29-07

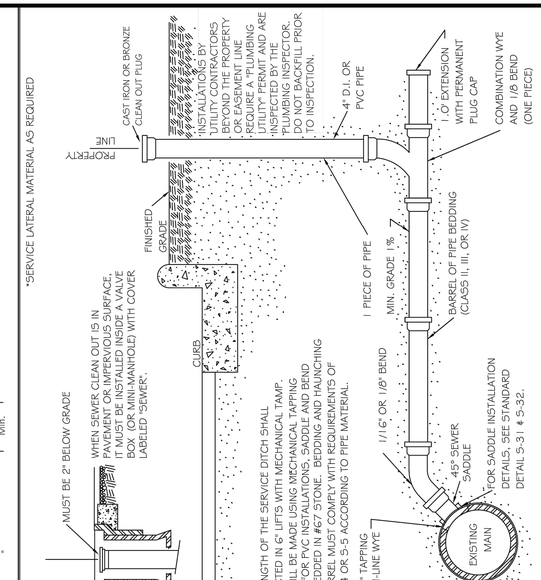

NOTE:
THE FULL LENGTH OF THE SERVICE DITCH SHALL BE COMPACTED IN 6" LIFTS WITH MECHANICAL TAMP. ALL TAPS WILL BE MADE USING MECHANICAL TAPPING MACHINES. ALL PIPE BENDS, 1/8 AND 1/16 BEND, MUST BE BEDDED IN MIN. 6" STONE BEDDING AND HAUNCHING OF PIPE BARREL MUST COMPLY WITH REQUIREMENTS OF DETAILS 5-4 OR 5-5 ACCORDING TO PIPE MATERIAL.

CITY OF RALEIGH
DEPARTMENT OF PUBLIC UTILITIES
TYPICAL SANITARY SEWER LATERAL CONNECTION

DWG. NO.	REVISIONS	DATE	REVISIONS	DATE
S-30	Y.C.A.	6-92	A.B.B.	4-8-04
	RRH	3-30-00	D.H.L.	6-18-08

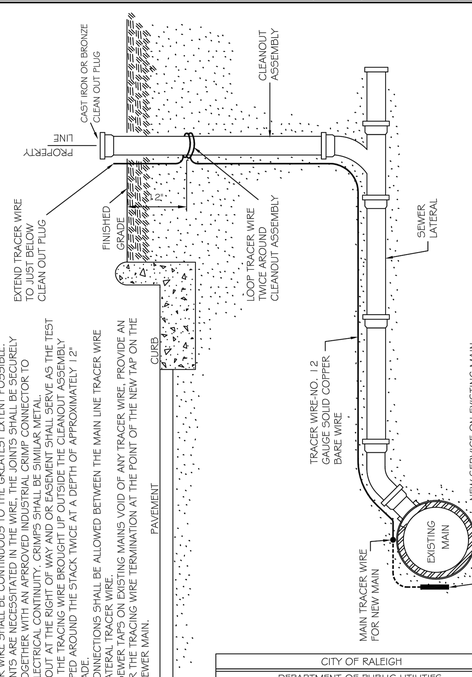

NOTES:
1. THE TRACER WIRE SHALL BE CONTINUOUS TO THE GREATEST EXTENT POSSIBLE. WHERE JOINTS ARE NECESSITATED IN THE WIRE, THE JOINTS SHALL BE SECURELY BONDED TOGETHER WITH AN APPROVED INDUSTRIAL CRIMP CONNECTOR TO PROVIDE ELECTRICAL CONTINUITY. CRIMPS SHALL BE SIMILAR METAL.
2. PROVIDE ELECTRICAL CONTINUITY TEST AT THE FURTHEST DWELLING AS THE TEST PORT WITH THE TRACING WIRE BROUGHT UP OUTSIDE THE CLEANOUT ASSEMBLY AND WRAPPED AROUND THE STACK TWICE AT A DEPTH OF APPROXIMATELY 12" BELOW GRADE.
3. SPLICED CONNECTIONS SHALL BE ALLOWED BETWEEN THE MAIN LINE TRACER WIRE AND THE LATERAL TRACER WIRE.
4. FOR NEW SEWER TAPS ON EXISTING MAINS VOID OF ANY TRACER WIRE, PROVIDE AN ADAPTER FOR THE TRACING WIRE TERMINATION AT THE POINT OF THE NEW TAP ON THE EXISTING SEWER MAIN.

CITY OF RALEIGH
DEPARTMENT OF PUBLIC UTILITIES
TYPICAL SANITARY SEWER LATERAL TRACER WIRE

DWG. NO.	REVISIONS	DATE	REVISIONS	DATE
S-30A	WKD	9-14		

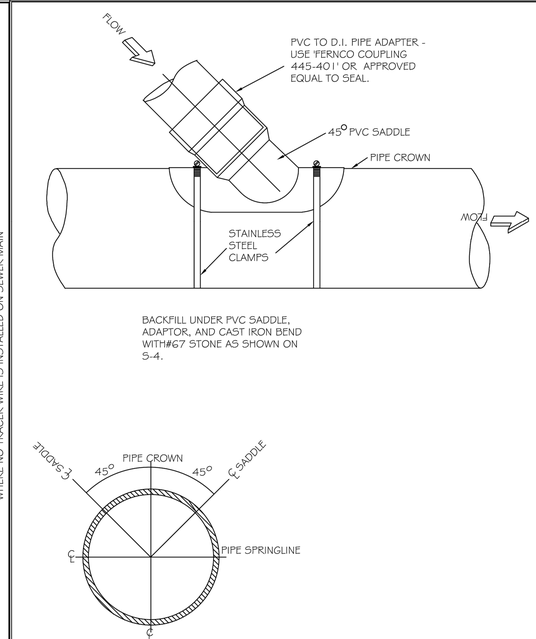

CITY OF RALEIGH
DEPARTMENT OF PUBLIC UTILITIES
LATERAL SADDLE INSTALLATION DETAIL FOR PVC PIPE

DWG. NO.	REVISIONS	DATE	REVISIONS	DATE
S-31		3-1-87		
	RRH	3-30-00		

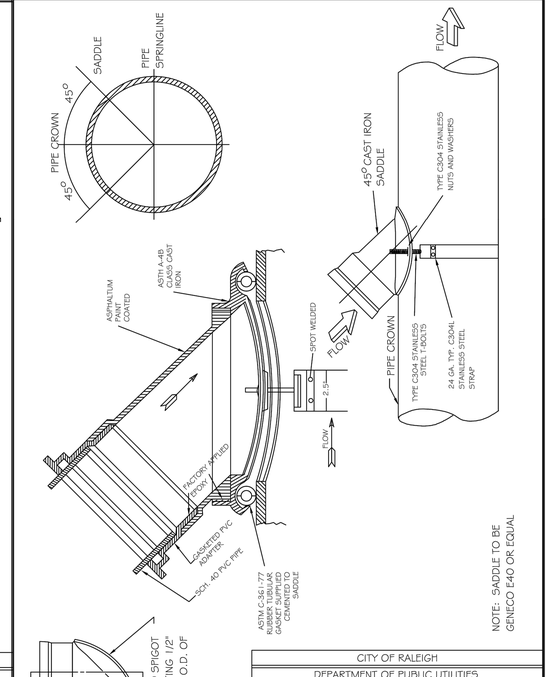

CITY OF RALEIGH
DEPARTMENT OF PUBLIC UTILITIES
LATERAL SADDLE INSTALLATION DETAIL FOR VCP AND DUCTILE IRON PIPE

DWG. NO.	REVISIONS	DATE	REVISIONS	DATE
S-32	3-1-87	3-1-87		
	RRH	3-30-00		

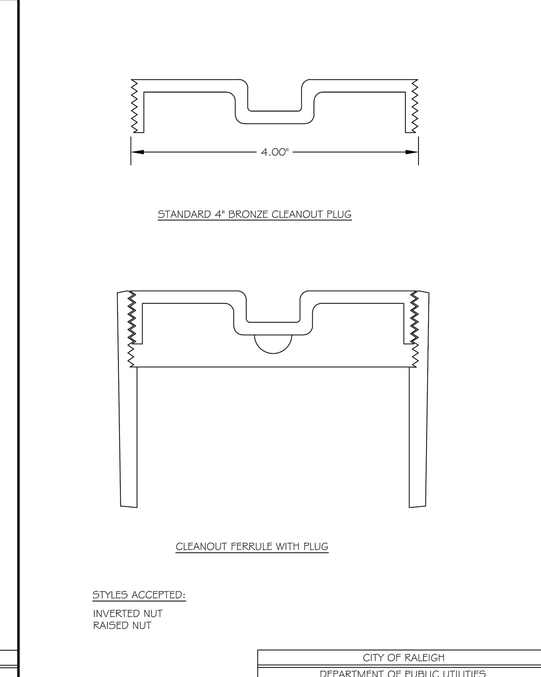

STYLES ACCEPTED:
INVERTED NUT
RAISED NUT

CITY OF RALEIGH
DEPARTMENT OF PUBLIC UTILITIES
4" CLEANOUT PLUG

DWG. NO.	REVISIONS	DATE	REVISIONS	DATE
S-34		3-1-87	RRH	3-30-00
	D.W.C.	3-27-98		

REV	DESCRIPTION	DATE
03	CONSTRUCTION DOCUMENTS 3rd SUBMITTAL	06/17/2020
02	CONSTRUCTION DOCUMENTS 2nd SUBMITTAL	04/15/2020
01	CONSTRUCTION DOCUMENTS 1st SUBMITTAL	01/13/2020

REVISIONS

P:\2017 Projects\170347 Chandlers Ridge\Eng\CADD\WG\TP SHEET\P_170347_C910_UTILITY_DETAILS.dwg

NORTH CAROLINA PROFESSIONAL SEAL 20234 ENGINEER THOMAS S. SPOON, JR.

Bateman Civil Survey Company
Engineers • Surveyors • Planners
2524 Reliance Avenue, Apex, North Carolina 27539
Phone: 919.577.1080 Fax: 919.577.1081
NCBELS FIRM No. C-2378

CHANDLER'S RIDGE
CONSTRUCTION DOCUMENTS
CONSERVATION SUBDIVISION

410 W. YOUNG ST.
ROLESVILLE, NC
WAKE COUNTY

CITY OF RALEIGH SEWER & FORCEMAIN DETAILS

Project Engineer:	TSS
Designed By:	TEP
Drawn By:	TEP
Checked By:	TSS
Scale:	
Date:	06/17/2020
Project Number:	P170347

SHEET
C911

P:\2017 Projects\170347 Chandlers Ridge\Eng\CAD\DWG\TP SHEET\P_170347_C910_UTILITY_DETAILS.dwg

REV	DESCRIPTION	DATE
03	CONSTRUCTION DOCUMENTS 3rd SUBMITTAL	06/17/2020
02	CONSTRUCTION DOCUMENTS 2nd SUBMITTAL	04/15/2020
01	CONSTRUCTION DOCUMENTS 1st SUBMITTAL	01/13/2020

REVISIONS

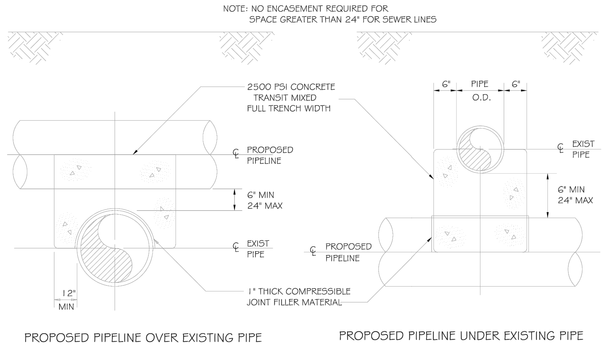

PROPOSED PIPELINE OVER EXISTING PIPE

PROPOSED PIPELINE UNDER EXISTING PIPE

CITY OF RALEIGH
DEPARTMENT OF PUBLIC UTILITIES

CONCRETE CRADLE PROTECTION FOR SEWER LINE CROSSINGS

DWG. NO. S-49

REVISIONS	DATE
DHL	2-20-08

REVISIONS	DATE

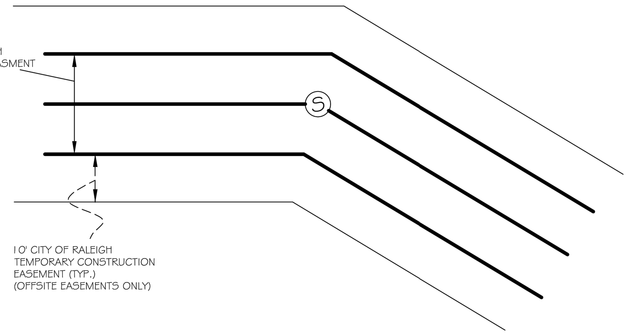

CITY OF RALEIGH
DEPARTMENT OF PUBLIC UTILITIES

8" & 10" SANITARY SEWER EASEMENT WIDTHS

DWG. NO. S-43

REVISIONS	DATE
A.B.B.	1-27-05
D.H.L.	6-18-08

REVISIONS	DATE

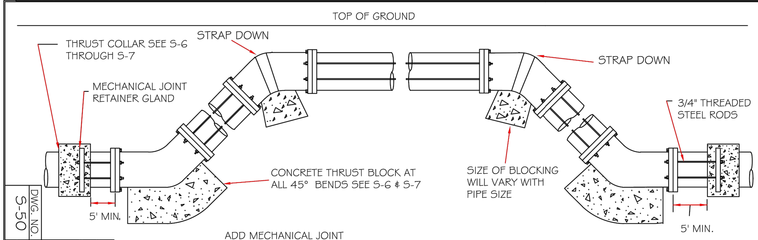

ADD MECHANICAL JOINT RETAINER GLANDS THROUGHOUT ASSEMBLY.

ROD REQUIREMENTS

SIZE OF 45 BEND	STATIC THRUST IN POUNDS	NO. OF RODS REQUIRED
6"	4,328	2
8"	7,694	4
12"	17,312	4
16"	30,779	8
24"	69,252	8

GENERAL NOTES:

1. STEEL RODS AND BOLTS SHALL BE 3/4" HOT DIPPED GALVANIZED.
2. CONCRETE SHALL NOT CONTACT BOLTS OR ENDS OF MECHANICAL JOINT BENDS.
3. RESTRAINED MECHANICAL GLANDS TO BE USED AT ALL FITTINGS.
4. MUST USE DUCTILE IRON EYE BOLTS WHERE NECESSARY.
5. ALL PIPING IN VERTICAL BENDS MUST BE DUCTILE IRON.
6. PIPE SHALL BE DUCTILE IRON A MINIMUM OF ONE JOINT IN EACH DIRECTION.
7. 3' MINIMUM COVER MUST BE MAINTAINED ON ALL FORCE MAINS

CITY OF RALEIGH
DEPARTMENT OF PUBLIC UTILITIES

STANDARD VERTICAL BEND

DWG. NO. S-50

REVISIONS	DATE
A.B.B.	4-15-04
D.H.L.	6-18-08

REVISIONS	DATE
J.T.S.	01-19-10

CITY OF RALEIGH SEWER & FORCEMAIN DETAILS

CHANDLER'S RIDGE
CONSTRUCTION DOCUMENTS
CONSERVATION SUBDIVISION

410 W. YOUNG ST.
ROLESVILLE, NC
WAKE COUNTY

Bateman Civil Survey Company
Engineers • Surveyors • Planners
2524 Reliance Avenue, Apex, North Carolina 27539
Phone: 919.577.1080 Fax: 919.577.1081
NCBELS FIRM No. C-2378

NORTH CAROLINA PROFESSIONAL SEAL 22236 ENGINEER TIMOTHY S. SPEIGHT

Project Engineer: TSS
Designed By: TEP
Drawn By: TEP
Checked By: TSS
Scale:
Date: 06/17/2020
Project Number: P170347

SHEET
C912

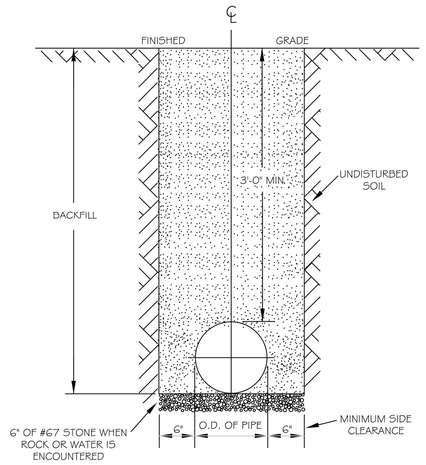

NOTES:
1. TRENCHES REQUIRING SHORING AND BRACING, DIMENSIONS SHALL BE TAKEN FROM THE INSIDE FACE OF THE SHORING AND BRACING.
2. NO ROCKS OR BOULDERS 4" OR LARGER TO BE USED IN BACKFILL.
3. ALL BACKFILL MATERIAL SHALL BE SUITABLE NATIVE MATERIAL.
4. BACKFILL SHALL BE TAMPED IN 6" LIFTS.
5. ACHIEVE 95% COMPACTION IN BACKFILL.

CITY OF RALEIGH
DEPARTMENT OF PUBLIC UTILITIES
TRENCH BOTTOM DIMENSIONS & BACKFILLING REQUIREMENTS FOR DUCTILE IRON

DWG. NO.	REVISIONS	DATE	REVISIONS	DATE
W-3	D.W.C.	9-3-99	ABB	2-15-05
	RRH	3-31-00	J.P.S.	10-29-10

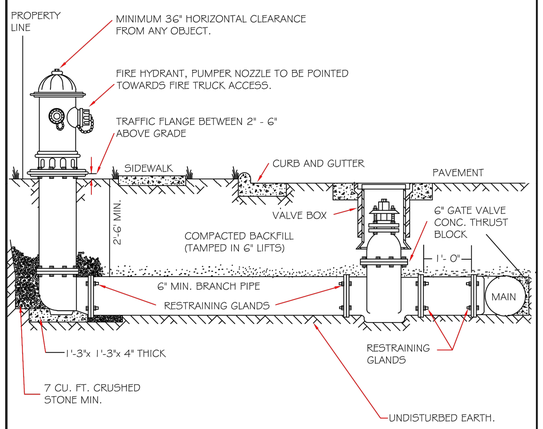

NOTES:
1. FIRE HYDRANT SHALL BE AS MANUFACTURED: MUELLER, AMERICAN DARLING, KENNEDY, M&H, WATEROUS, CLOW, EAST JORDAN IRON WORKS, OR US PIPE.
2. BRANCH PIPE SHALL BE DUCTILE IRON AWWA C150-96
3. 6" GATE VALVE SHALL BE AWWA C500-86 OPEN LEFT
4. STEEL RODS AND BOLTS SHALL BE ¾" HOT DIPPED GALVANIZED
5. FIRE HYDRANTS WILL BE INSTALLED IN TRUE VERTICAL POSITION
   RODS SHALL NOT BE COUPLED MORE THAN ONCE. IF THE LENGTH FROM THE VALVE TO THE HYDRANT EXCEEDS 20' THEN A MECHANICAL RESTRAINING GLAND WITH A REBAR CAGE SHALL BE INSTALLED NO MORE THAN 10' FROM HYDRANT AND POURED IN CONCRETE.
   FIRE HYDRANTS TO BE LOCATED IN ROW OR 2 FOOT EASEMENT ADJACENT TO ROW

ANYTIME SITE WORK, CONSTRUCTION, ROAD WORK, OR ANY OTHER WORK CHANGES THE GRADE OF THE FIRE HYDRANT, THE PERSON RESPONSIBLE FOR THE WORK IS RESPONSIBLE FOR ADJUSTING THE FIRE HYDRANT TO STAY WITHIN COMPLIANCE.

CITY OF RALEIGH
DEPARTMENT OF PUBLIC UTILITIES
STANDARD FIRE HYDRANT INSTALLATION DETAIL

DWG. NO.	REVISIONS	DATE	REVISIONS	DATE
W-4	ABB	4-6-04	PAP	2/17/09
	DHL	2/14/08		

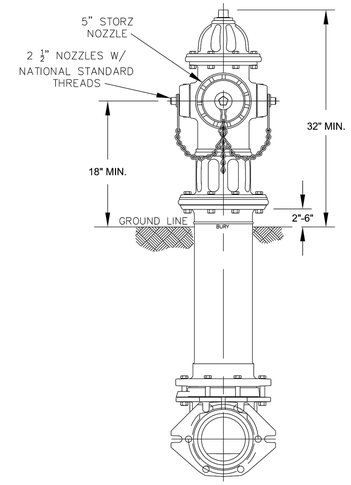

NOTES:
1. ALL PUBLIC FIRE HYDRANTS IN THE CITY OF RALEIGH AND THE MERGER TOWNS OF GARNER, ROLESVILLE, WAKE FOREST, KNIGHTDALE, WENDELL AND ZEBULON SHALL BE PAINTED CHROME YELLOW WITH HIGH REFLECTIVE ALUMINUM SILVER CAPS, BONNETS AND OPERATING NUTS.
2. ALL PRIVATE FIRE HYDRANTS SHALL BE RED.

CITY OF RALEIGH
DEPARTMENT OF PUBLIC UTILITIES
RALEIGH, GARNER, KNIGHTDALE, ROLESVILLE, WAKE FOREST, WENDELL & ZEBULON
STANDARD FIRE HYDRANT WITH 5" STORZ PUMPER NOZZLE

DWG. NO.	REVISIONS	DATE	REVISIONS	DATE
W-5	MAB	6-30-16		
	KAT	9-15-17		

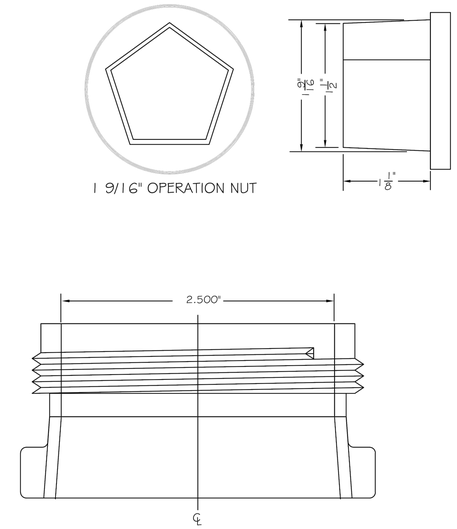

CITY OF RALEIGH
DEPARTMENT OF PUBLIC UTILITIES
HYDRANT OPERATING NUT AND 2 1/2" OUTLET THREADS

DWG. NO.	REVISIONS	DATE	REVISIONS	DATE
W-6	RRH	3-31-00	DHL	2-18-08
	A.B.B	4-13-04	J.P.S	11-1-10

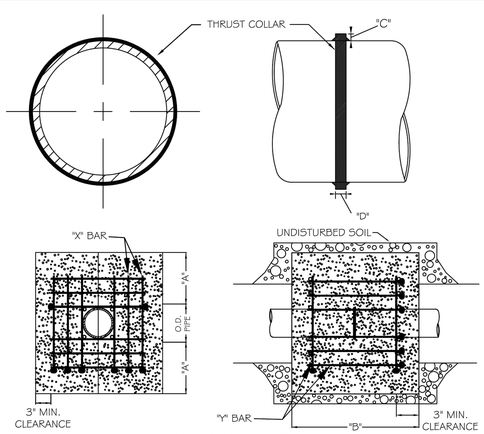

REINFORCING REQUIREMENTS

I.D. PIPE	REBAR SIZE	"X" BAR LENGTH	"X" BAR WEIGHT	"Y" BAR LENGTH	"Y" BAR WEIGHT	NO. REQUIRED
6" - 36"	#5	2'-2"+ O.D. PIPE	1.043 LBS/FT	1'-1"	1.1 LBS. EACH	X-24, Y-12
48" & greater	#6	3'-0"+ O.D. PIPE	1.502 LBS/FT	1'-3"	1.9 LBS. EACH	X-24, Y-12

THRUST COLLAR, AND THRUST SCHEDULE

I.D. PIPE	"A"	"B"	"C"	"D"
6" - 16"	1'-4"	1'-7"	2"	3/8"
20" - 24"	1'-4"	1'-7"	3"	1/2"
30" - 36"	1'-4"	1'-7"	4"	5/8"
48" & greater	1'-8"	1'-9"	6"	7/8"

NOTES:
1. SEE STANDARD DETAIL W-9 FOR THRUST BLOCK LOCATIONS.
2. CONCRETE SHALL BE 3000 PSI AND TRANSIT MIXED.
3. REINFORCING BARS SHALL BE DEFORMED AND TIED TOGETHER.
4. TRENCH BOTTOM WIDTH IN VICINITY OF THRUST BLOCK INSTALLATION SHALL BE THE MINIMUM WIDTH AS SHOWN ON STANDARD DETAIL W-3.
5. BACKFILL TAMPED IN 6" LIFTS PER STANDARD DETAIL W-3.
6. THRUST COLLAR MUST BE FACTORY WELDED ON BOTH SIDES ALONG BOTH EDGES OF COLLAR AROUND CIRCUMFERENCE.

CITY OF RALEIGH
DEPARTMENT OF PUBLIC UTILITIES
THRUST BLOCKING DESIGN DATA FOR WATER MAINS

DWG. NO.	REVISIONS	DATE	REVISIONS	DATE
W-7	RRH	3-21-00	J.P.S.	11-1-10
		6-18-08		

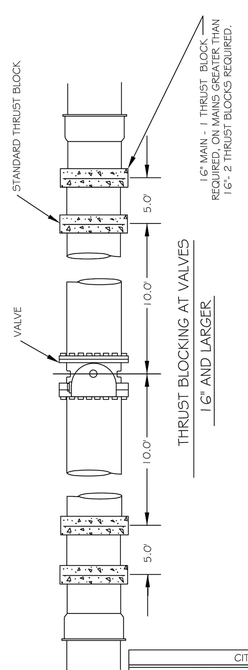

CITY OF RALEIGH
DEPARTMENT OF PUBLIC UTILITIES
STANDARD THRUST BLOCK INSTALLATION FOR 16" AND LARGER VALVES AND DEAD END MAINS

DWG. NO.	REVISIONS	DATE	REVISIONS	DATE
W-8	Y.C.A.	4-12-90	D.W.C.	9-7-99
		6-92	RRH	3-31-00

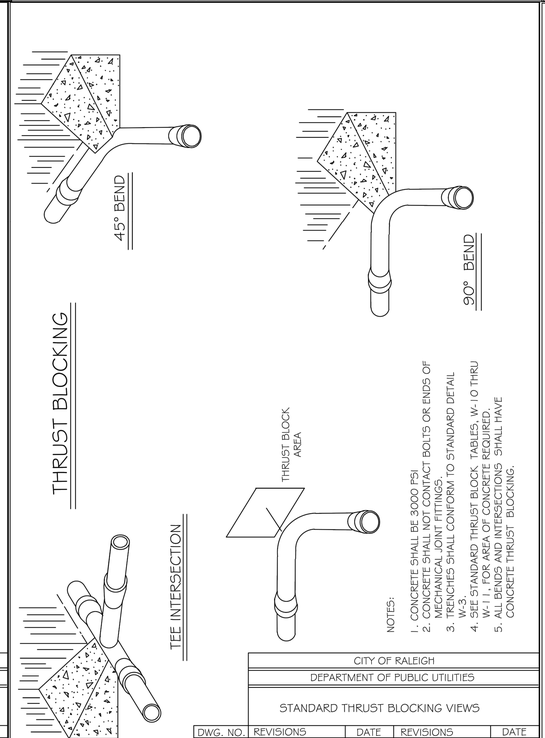

NOTES:
1. CONCRETE SHALL BE 3000 PSI
2. CONCRETE SHALL NOT CONTACT BOLTS OR ENDS OF MECHANICAL JOINT FITTINGS.
3. TRENCHES SHALL CONFORM TO STANDARD DETAIL W-3.
4. SEE STANDARD THRUST BLOCK TABLES, W-10 THRU W-11, FOR AREA OF CONCRETE REQUIRED.
5. ALL BENDS AND INTERSECTIONS SHALL HAVE CONCRETE THRUST BLOCKING.

CITY OF RALEIGH
DEPARTMENT OF PUBLIC UTILITIES
STANDARD THRUST BLOCKING VIEWS

DWG. NO.	REVISIONS	DATE	REVISIONS	DATE
W-9	D.W.C.	3-1-87	RRH	3-31-00
		9-7-99	D.H.L.	6-18-08

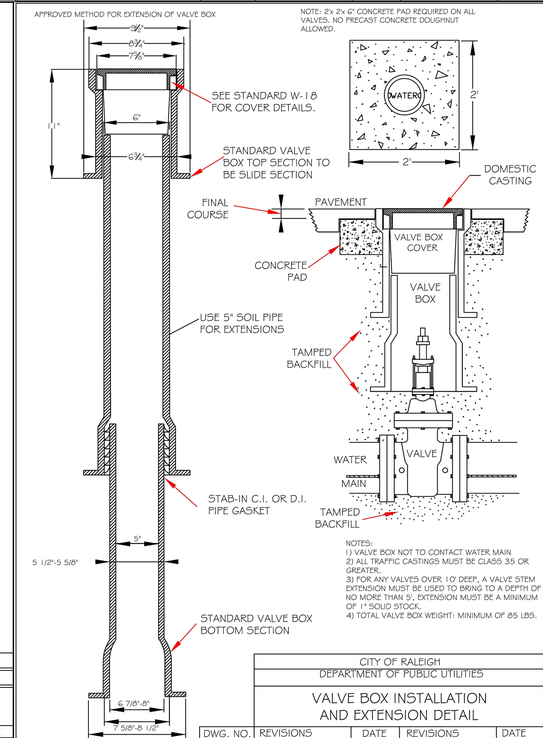

NOTES:
1) VALVE BOX NOT TO CONTACT WATER MAIN
2) ALL TRAFFIC CASTINGS MUST BE CLASS 35 OR GREATER.
3) FOR ANY VALVES OVER 10' DEEP, A VALVE STEM EXTENSION MUST BE USED TO BRING TO A DEPTH OF NO MORE THAN 5'. EXTENSION MUST BE A MINIMUM OF 1" SOLID STOCK.
4) TOTAL VALVE BOX WEIGHT: MINIMUM OF 85 LBS.

CITY OF RALEIGH
DEPARTMENT OF PUBLIC UTILITIES
VALVE BOX INSTALLATION AND EXTENSION DETAIL

DWG. NO.	REVISIONS	DATE	REVISIONS	DATE
W-17	D.W.C.	9-7-99	A.B.B.	4-15-04
	RRH	3-31-00	DHL	6-16-07

REV	DESCRIPTION	DATE
03	CONSTRUCTION DOCUMENTS 3rd SUBMITTAL	06/17/2020
02	CONSTRUCTION DOCUMENTS 2nd SUBMITTAL	04/15/2020
01	CONSTRUCTION DOCUMENTS 1st SUBMITTAL	01/13/2020

REVISIONS

P:\2017 Projects\170347 Chandlers Ridge\Eng\CAD\DWG\TP SHEET\P_170347_C910_UTILITY_DETAILS.dwg

NORTH CAROLINA PROFESSIONAL SEAL 20234 ENGINEER THOMAS S. SPOLDI, JR.

Bateman Civil Survey Company
Engineers • Surveyors • Planners
2524 Reliance Avenue, Apex, North Carolina 27539
Phone: 919.577.1080 Fax: 919.577.1081
NCBELS FIRM No. C-2378

CHANDLER'S RIDGE
CONSTRUCTION DOCUMENTS
CONSERVATION SUBDIVISION
410 W. YOUNG ST.
ROLESVILLE, NC
WAKE COUNTY

CITY OF RALEIGH
WATER DETAILS

Project Engineer:	TSS
Designed By:	TEP
Drawn By:	TEP
Checked By:	TSS
Scale:	
Date:	06/17/2020
Project Number:	P170347

SHEET
C913

REACTION BEARING AREAS FOR HORIZONTAL WATER PIPE BENDS
BASED ON TEST PRESSURE OF 200 P.S.I.

ALL AREAS GIVEN IN SQUARE FEET.

SIZE AND DEGREE OF BEND	STATIC THRUST IN POUNDS	MODERATELY DRY CLAY 4000 LBS/FT²	SOFT CLAY 2000 LBS/FT²	1600 LBS/FT² GRAVEL / COARSE SAND	8000 LBS/FT² DRY CLAY - ALWAYS DRY	SAND, COMPACT FIRM 8000 LBS/FT²	SAND - CLEAN DRY 4000 LBS/FT²	SOIL 1,000 LBS/FT² QUICKSAND - VERY POOR	ROCK - POOR 10,000 LBS/FT²
6"									
11 1/4°	1,108	1	1	1	1	1	1	2	1
22 1/2°	2,207	1	2	2	1	1	1	3	1
45°	4,328	2	3	3	1	1	2	5	1
90°	7,996	2	4	5	1	1	2	8	1
PLUG	5,655	2	3	4	1	1	2	6	1
8"									
11 1/4°	1,970	1	1	2	1	1	1	2	1
22 1/2°	3,922	1	2	3	1	1	1	4	1
45°	7,694	2	4	5	1	1	2	8	1
90°	14,215	4	8	9	2	2	4	15	2
PLUG	10,053	3	5	6	2	2	3	10	1
12"									
11 1/4°	4,433	2	3	3	1	1	2	5	1
22 1/2°	8,826	3	5	6	2	2	3	9	1
45°	17,312	5	9	11	3	3	5	18	2
90°	31,983	8	16	19	4	4	8	32	4
PLUG	22,619	6	12	14	3	3	6	23	3
16"									
11 1/4°	7,881	2	4	5	1	1	2	8	1
22 1/2°	15,691	4	8	10	2	2	4	16	2
45°	30,779	8	16	19	4	4	8	31	4
90°	56,861	15	29	35	8	8	15	57	6
PLUG	40,213	10	21	25	5	5	10	41	5

REACTION BEARING AREAS ARE IN SQUARE FEET MEASURED IN A VERTICAL PLANE IN THE TRENCH SIDE AT AN ANGLE OF 90° TO THE THRUST VECTOR.

USE 6" - 90 BEND VALUE FOR HYDRANTS FOR ADDITIONAL SAFETY FACTOR.

CITY OF RALEIGH
DEPARTMENT OF PUBLIC UTILITIES
THRUST BLOCKING DESIGN QUANTITY TABLE

DWG. NO.	REVISIONS	DATE	REVISIONS	DATE
W-10	D.W.C.	6-23-99		

REACTION BEARING AREAS FOR HORIZONTAL WATER PIPE BENDS
BASED ON TEST PRESSURE OF 200 P.S.I.

ALL AREAS GIVEN IN SQUARE FEET.

SIZE AND DEGREE OF BEND	STATIC THRUST IN POUNDS	MODERATELY DRY CLAY 4000 LBS/FT²	SOFT CLAY 2000 LBS/FT²	GRAVEL/COARSE SAND 1600LBS/FT²	8000 LBS/FT² DRY CLAY - ALWAYS DRY	SAND, COMPACT FIRM 8000 LBS/FT²	SAND - CLEAN DRY 4000 LBS/FT²	SOIL 1000 LBS/FT² QUICKSAND - VERY POOR	ROCK - POOR 10,000 LBS/FT²
24"									
11 1/4°	17,734	5	9	11	3	3	5	18	2
22 1/2°	35,305	9	18	22	5	5	9	36	4
45°	69,252	18	35	42	9	9	18	70	7
90°	127,936	32	64	77	16	16	32	128	13
PLUG	90,478	23	46	55	12	12	23	91	10
30"									
11 1/4°	27,709	7	14	17	4	4	7	2	3
22 1/2°	55,163	14	28	34	7	7	14	56	6
45°	108,206	28	55	65	14	14	28	109	11
90°	199,900	50	100	120	25	25	50	200	20
PLUG	141,372	36	71	85	18	18	36	142	15
36"									
11 1/4°	39,901	10	20	24	5	5	10	40	4
22 1/2°	79,439	20	40	48	10	10	20	30	8
45°	155,816	39	78	94	20	20	39	156	16
90°	287,855	72	144	172	36	36	72	288	29
PLUG	203,575	51	102	122	26	26	51	204	21
48"									
11 1/4°	70,935	18	36	43	9	9	18	71	8
22 1/2°	141,218	36	71	85	18	18	36	142	15
45°	277,007	70	139	166	35	35	70	277	28
90°	511,742	128	256	320	64	64	128	512	52
PLUG	361,911	91	181	217	46	46	91	362	37

REACTION BEARING AREAS ARE IN SQUARE FEET MEASURED IN A VERTICAL PLANE IN THE TRENCH SIDE AT AN ANGLE OF 90° TO THE THRUST VECTOR.

USE 6" - 90° BEND VALUE FOR HYDRANTS FOR ADDITIONAL SAFETY FACTOR.

CITY OF RALEIGH
DEPARTMENT OF PUBLIC UTILITIES
THRUST BLOCKING DESIGN QUANTITY TABLE

DWG. NO.	REVISIONS	DATE	REVISIONS	DATE
W-11	D.W.C.	6-23-99		

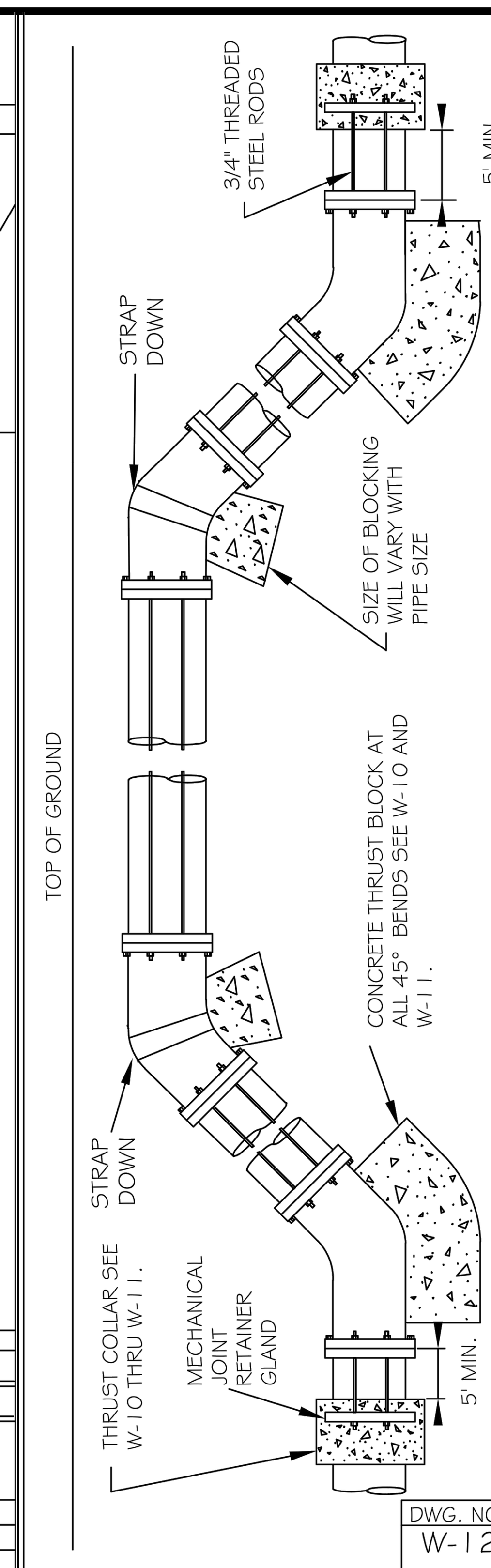

ROD REQUIREMENTS

SIZE OF 45 BEND	STATIC THRUST IN POUNDS	NO. OF RODS REQUIRED
6"	4,328	2
8"	7,694	4
12"	17,312	4
16"	30,779	8
24"	69,252	8

GENERAL NOTES:
1. STEEL RODS AND BOLTS SHALL BE 3/4" HOT DIPPED GALVANIZED.
2. CONCRETE SHALL NOT CONTACT BOLTS OR ENDS OF MECHANICAL JOINT BENDS.
3. RESTRAINED MECHANICAL GLANDS TO BE USED AT ALL FITTINGS.
4. MUST USE DUCTILE IRON EYE BOLTS WHERE NECESSARY.
5. 3' MINIMUM COVER MUST BE MAINTAINED ON ALL WATER MAINS

CITY OF RALEIGH
DEPARTMENT OF PUBLIC UTILITIES
STANDARD VERTICAL BEND

DWG. NO.	REVISIONS	DATE	REVISIONS	DATE
W-12	ABB	4-6-04	J.P.S.	11-1-10
	D.H.L.	6-18-08		

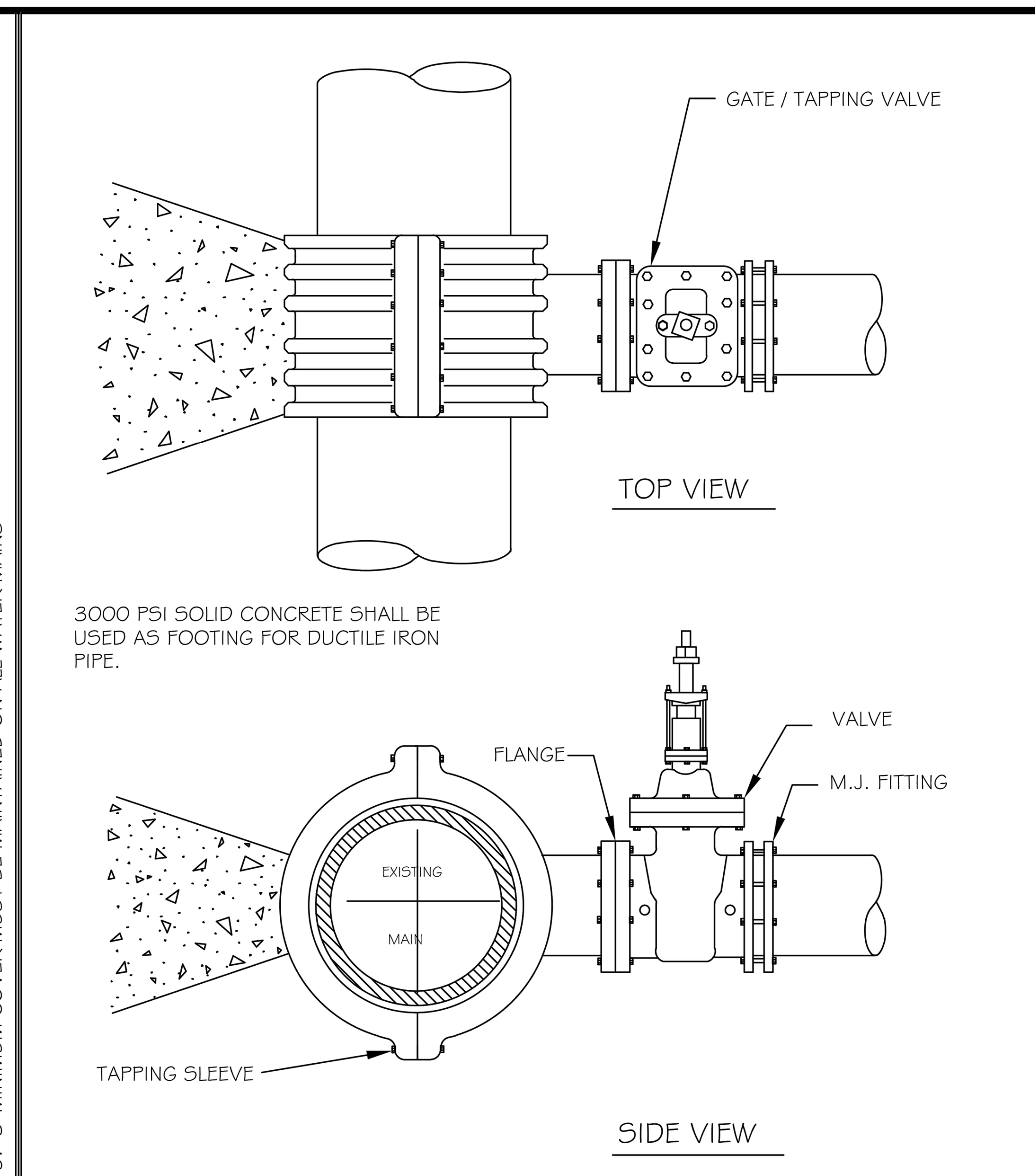

NOTES:
1. CONCRETE SHALL NOT CONTACT BOLTS OR ENDS OF MECHANICAL JOINT FITTINGS.
2. SEE STANDARD REACTION BLOCK TABLES, W-10 AND W-11 FOR AREA OF CONCRETE REQUIRED.

CITY OF RALEIGH
DEPARTMENT OF PUBLIC UTILITIES
4" - 24" STANDARD TAPPING SLEEVE AND VALVE ASSEMBLY

DWG. NO.	REVISIONS	DATE	REVISIONS	DATE
W-14	Y.C.A.	12-31-91	RRH	3-31-00
	D.W.C.	9-7-99	J.P.S.	11-1-10

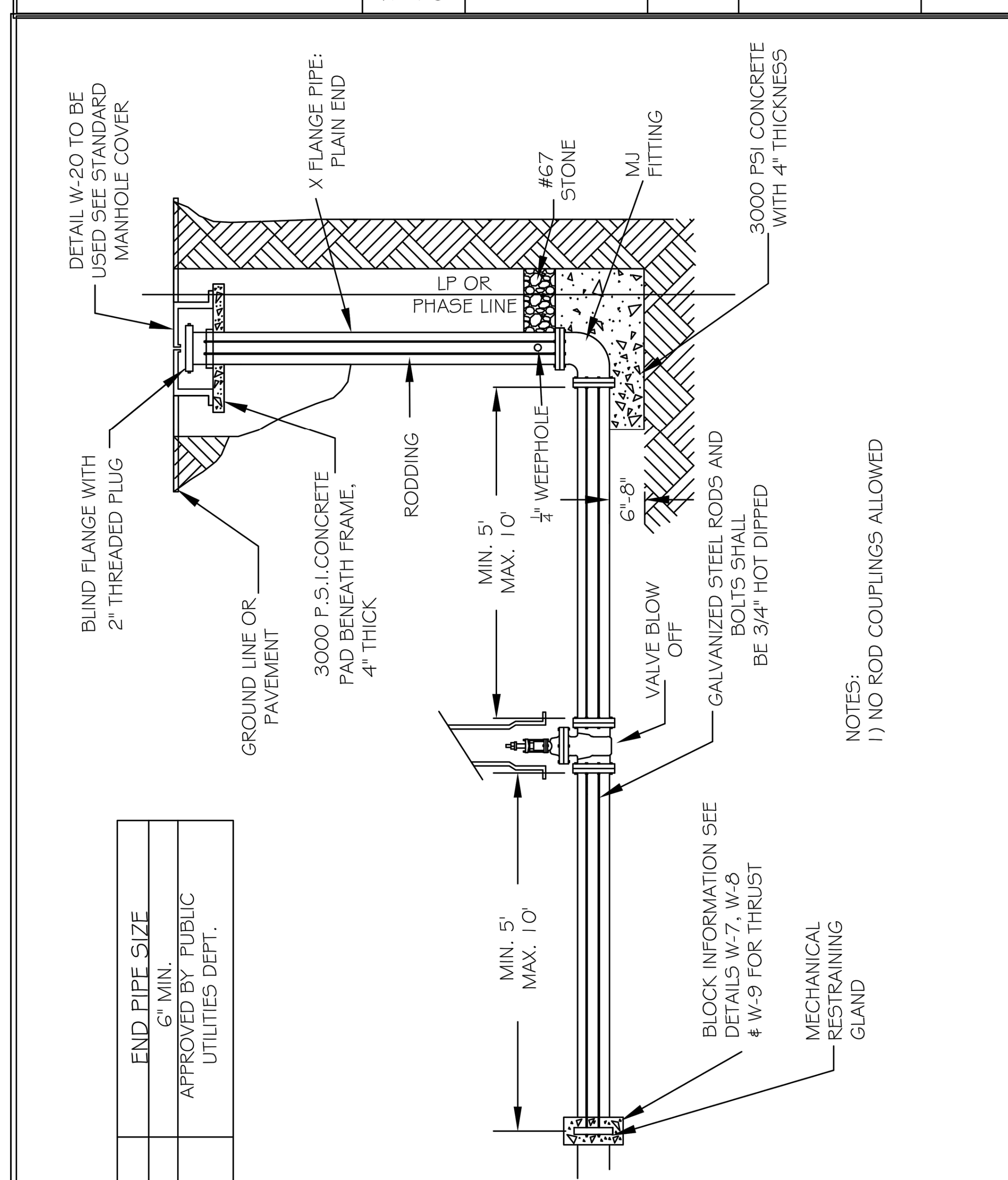

MAIN SIZE	END PIPE SIZE
16" & GREATER	6" MIN. APPROVED BY PUBLIC UTILITIES DEPT.
6" - 12"	2"

CITY OF RALEIGH
DEPARTMENT OF PUBLIC UTILITIES
TEMPORARY WATER MAIN BLOW OFF ASSEMBLY

DWG. NO.	REVISIONS	DATE	REVISIONS	DATE
W-21	D.W.C.	12-28-99	A.B.B.	4-12-04
	RKH	3-31-00	DHL	8-16-07

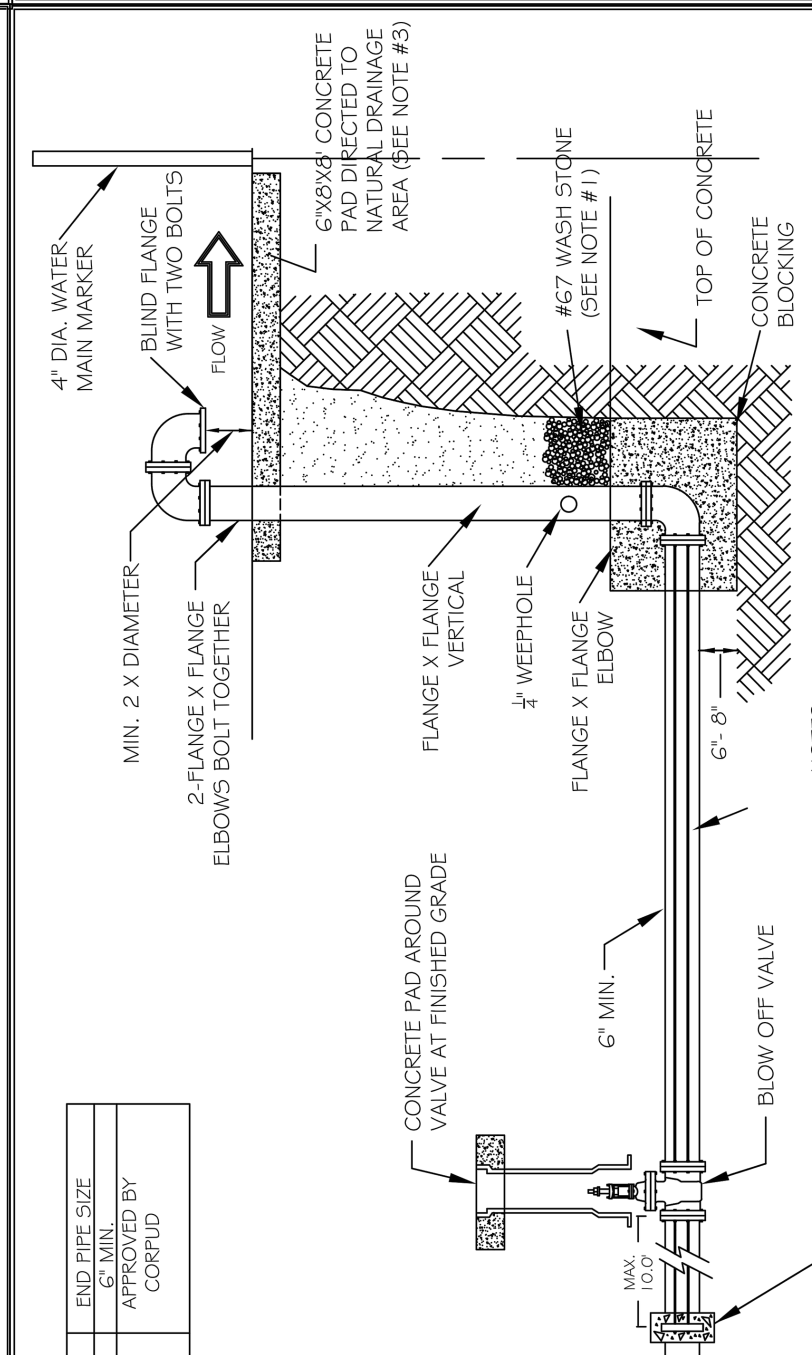

NOTES:
1. DRILL 1/4" WEEP HOLE FOR STACK DRAINAGE INTO STONE.
2. DOUBLE 3/4" BRIDLE RODS ON BOTH SIDES.
3. A RIP RAP SWALE FROM CONCRETE SPLASH PAD TO POSITIVE DRAINAGE AREA IS REQUIRED.
4. BOTTOM 90 ELBOW SHALL HAVE BLIND FLANGE ATTACHED WITH TWO BOLTS.
5. INSTALL WATER MAIN MARKER AT RW OR P/L TO LOCATE MAIN.
6. 3/4" RODS AND BOLTS TO BE HOT DIPPED GALVANIZED.
7. END PIPE SIZE 6" MIN. OR AS APPROVED BY PUBLIC UTILITIES.

MAIN SIZE	END PIPE SIZE
6" - 12"	6" MIN.
16"+	APPROVED BY CORPUD

CITY OF RALEIGH
DEPARTMENT OF PUBLIC UTILITIES
PERMANENT WATER MAIN BLOW OFF ASSEMBLY

DWG. NO.	REVISIONS	DATE	REVISIONS	DATE
W-22	D.W.C.	12-28-99	DHL	8-16-07
	A.B.B.	4-13-04		

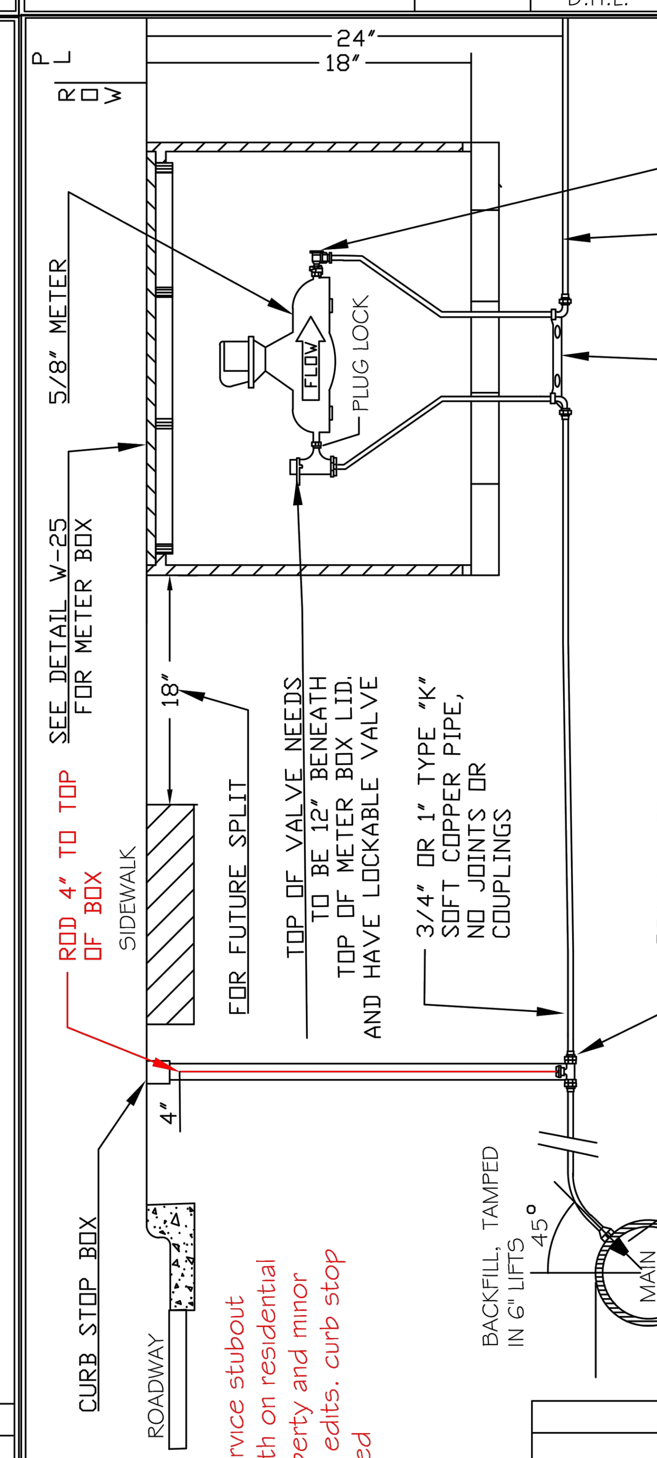

NOTES:
1. WATER METER AS MANUFACTURED BY SENSUS, OR SCHLUMBERGER.
2. DIRECT TAP ALLOWED ON MAINS NO LARGER THAN 16" LINE.
3. METER BOX TO BE LOCATED IN R/W ADJACENT TO PROPERTY OR IN APPROVED EASEMENT ADJACENT TO R/W.
4. WHEN THE GRADE CHANGES ON EXISTING SERVICES, A COPPER RESETTER CAN BE USED TO ADJUST TO GRADE. COPPER RESETTERS ARE PROHIBITED ON NEW SERVICES.
5. CURB STOP BOX SHALL HAVE PLUG STYLE LID WITH PENTAGON BOLT, 1-1/4" STEEL UPPER SECTION, AND ARCH STYLE BASE. STEEL STATIONARY ROD TO BE PROVIDED FOR CURB STOP OPERATION.

CITY OF RALEIGH
DEPARTMENT OF PUBLIC UTILITIES
STANDARD 3/4" & 1" WATER SERVICE INSTALLATION

DWG. NO.	REVISIONS	DATE	REVISIONS	DATE
W-23	ABB	4-6-04	RKV	7/23/13
	D.H.L.	6/18/08		

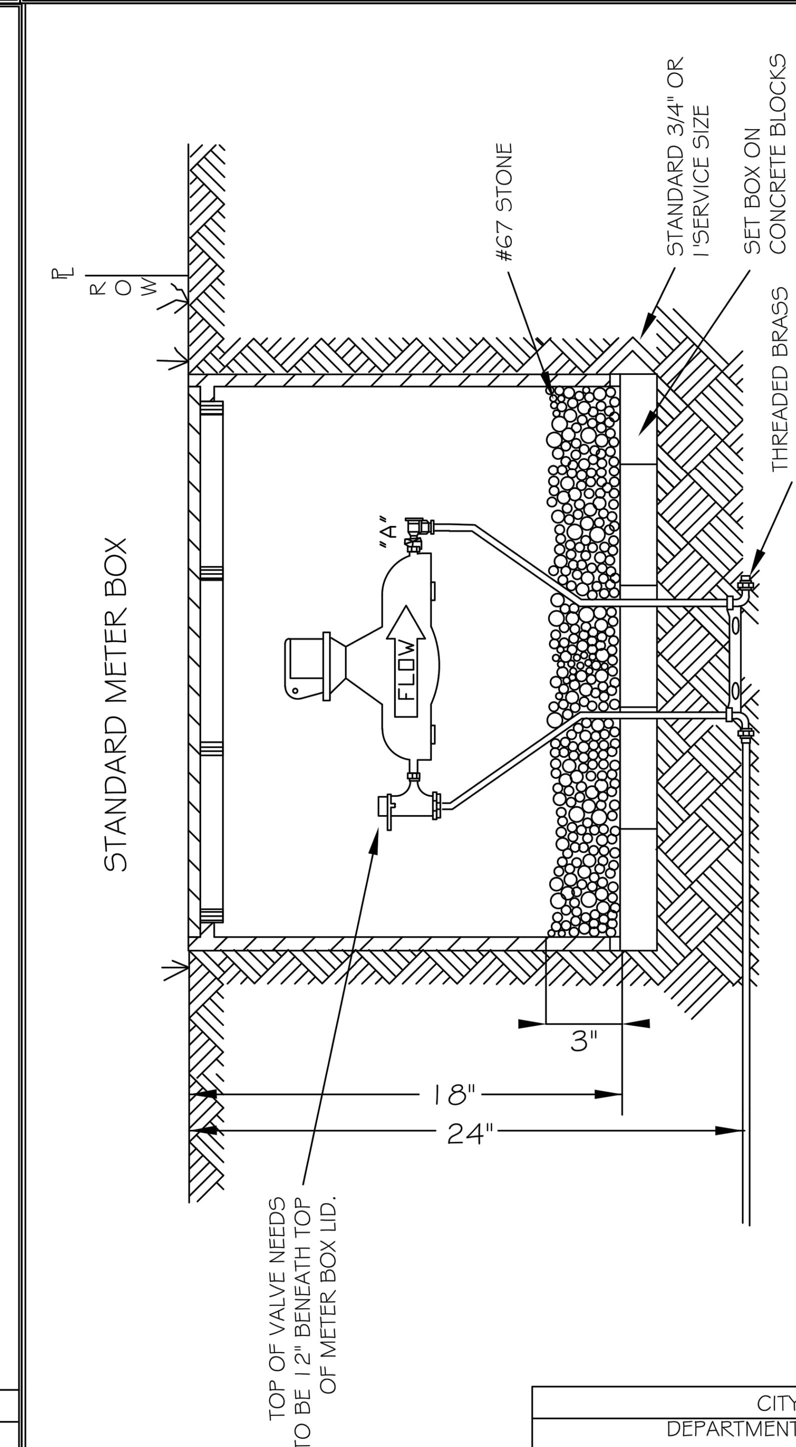

THE BACKFLOW PREVENTER LOCATION IS DEPENDENT ON THE TYPE DEVICE PROPOSED FOR USE AS FOLLOWS:

ONE OR TWO FAMILY RESIDENTIAL		COMMERCIAL	
DEVICE	LOCATION	DEVICE	LOCATION
"A"	FORD ANGLE CHECK OR OTHER APPROVED DUAL CHECK VALVES	"A"	BACKFLOW PREVENTION SHALL BE DETERMINED BY OCCUPANCY & APPROVED BACKFLOW LIST.

CITY OF RALEIGH
DEPARTMENT OF PUBLIC UTILITIES
ONE OR TWO FAMILY DWELLINGS BACKFLOW PREVENTION/ METER ASSEMBLY INSTALLATION

DWG. NO.	REVISIONS	DATE	REVISIONS	DATE
W-24	Y.C.A.	12-31-91	D.H.L.	6/18/08
	A.B.B.	4-7-04	J.P.S.	11/4/10

REV	DESCRIPTION	DATE
03	CONSTRUCTION DOCUMENTS 3rd SUBMITTAL	06/17/2020
02	CONSTRUCTION DOCUMENTS 2nd SUBMITTAL	04/15/2020
01	CONSTRUCTION DOCUMENTS 1st SUBMITTAL	01/13/2020

REVISIONS

P:\2017 Projects\170347 Chanders Ridge\Eng\CAD\DWG\TP SHEET\P_170347_C910_UTILITY_DETAILS.dwg

NORTH CAROLINA PROFESSIONAL SEAL 20234 ENGINEER THOMAS S. SPEIGHT, JR.

Bateman Civil Survey Company
Engineers • Surveyors • Planners
2524 Reliance Avenue, Apex, North Carolina 27539
Phone: 919.577.1080 Fax: 919.577.1081
NCBELS FIRM No. C-2378

CHANDLER'S RIDGE
CONSTRUCTION DOCUMENTS
CONSERVATION SUBDIVISION
410 W. YOUNG ST.
ROLESVILLE, NC
WAKE COUNTY

CITY OF RALEIGH WATER DETAILS

Project Engineer:	TSS
Designed By:	TEP
Drawn By:	TEP
Checked By:	TSS
Scale:	
Date:	06/17/2020
Project Number:	P170347

SHEET
C914

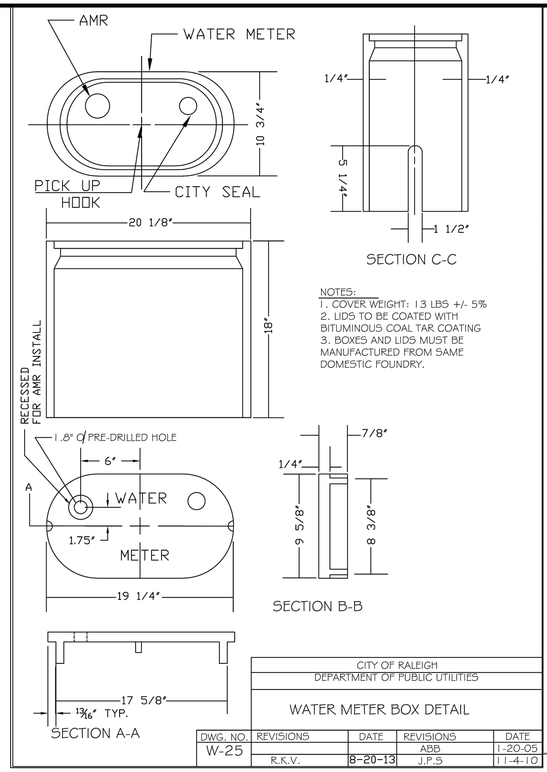

NOTES:
1. COVER WEIGHT: 13 LBS +/- 5%
2. LIDS TO BE COATED WITH BITUMINOUS COAL TAR COATING
3. BOXES AND LIDS MUST BE MANUFACTURED FROM SAME DOMESTIC FOUNDRY.

DWG. NO.	REVISIONS	DATE	REVISIONS	DATE
W-25			ABB	1-20-05
	R.K.V.	8-20-13	J.P.S	11-4-10

CITY OF RALEIGH
DEPARTMENT OF PUBLIC UTILITIES

WATER METER BOX DETAIL

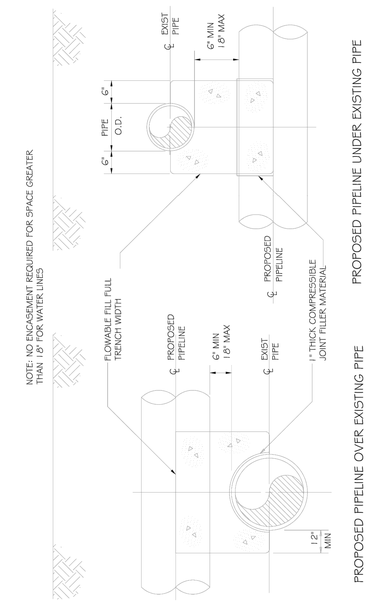

CITY OF RALEIGH
DEPARTMENT OF PUBLIC UTILITIES

CONCRETE CRADLE PROTECTION FOR WATER LINE CROSSINGS

DWG. NO.	REVISIONS	DATE	REVISIONS	DATE
W-41	DHL	2-20-08		

REV	DESCRIPTION	DATE
03	CONSTRUCTION DOCUMENTS 3rd SUBMITTAL	06/17/2020
02	CONSTRUCTION DOCUMENTS 2nd SUBMITTAL	04/15/2020
01	CONSTRUCTION DOCUMENTS 1st SUBMITTAL	01/13/2020

REVISIONS

P:\2017 Projects\170347 Chandlers Ridge\Eng\CAD\DWG\TP SHEET\P_170347_C910_UTILITY_DETAILS.dwg

NORTH CAROLINA PROFESSIONAL SEAL 20234 ENGINEER THOMAS S. SPOCHT, JR.

Bateman Civil Survey Company
Engineers • Surveyors • Planners
2524 Reliance Avenue, Apex, North Carolina 27539
Phone: 919.577.1080 Fax: 919.577.1081
NCBELS FIRM No. C-2378

CHANDLER'S RIDGE
CONSTRUCTION DOCUMENTS
CONSERVATION SUBDIVISION
410 W. YOUNG ST.
ROLESVILLE, NC
WAKE COUNTY

CITY OF RALEIGH
WATER DETAILS

Project Engineer:	TSS
Designed By:	TEP
Drawn By:	TEP
Checked By:	TSS
Scale:	
Date:	06/17/2020
Project Number:	P170347

SHEET
C915

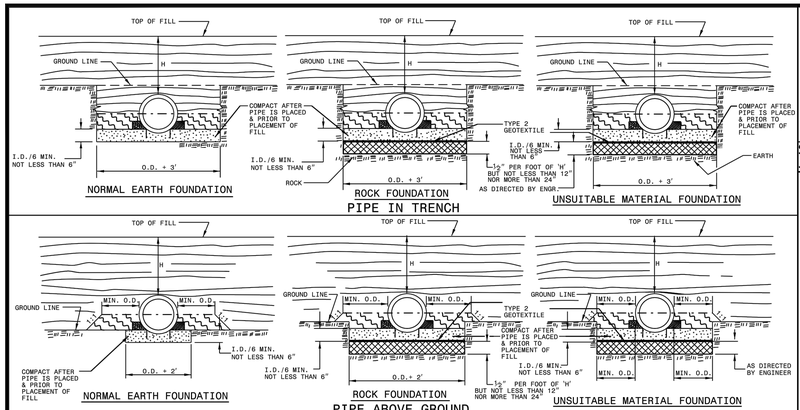

GENERAL NOTES:

I.D. = THE MAXIMUM HORIZONTAL INSIDE DIAMETER DIMENSION.

O.D. = THE MAXIMUM HORIZONTAL OUTSIDE DIAMETER DIMENSION.

H = THE FILL HEIGHT MEASURED VERTICALLY AT ANY POINT ALONG THE PIPE FROM THE TOP OF THE PIPE TO THE TOP OF THE EMBANKMENT AT THAT POINT.

TAKE CARE TO FULLY COMPACT HAUNCH ZONE OF PIPE BACKFILL.

LOOSELY PLACED SELECT MATERIAL CLASS III OR CLASS II, TYPE 1 FOR PIPE BEDDING. LEAVE SECTION DIRECTLY BENEATH PIPE UNCOMPACTED AS PIPE SEATING AND BACKFILL WILL ACCOMPLISH COMPACTION.

DO NOT OPERATE HEAVY EQUIPMENT OVER ANY PIPE CULVERT UNTIL THE PIPE CULVERT HAS BEEN PROPERLY BACKFILLED AND COVERED WITH AT LEAST 3 FEET OF APPROVED MATERIAL.

SPRINGLINE OF PIPE

SELECT BACKFILL MATERIAL CLASS III OR CLASS II, BELOW SPRINGLINE.

APPROVED SUITABLE LOCAL MATERIAL ABOVE SPRINGLINE.

UNDISTURBED EARTH MATERIAL

SELECT MATERIAL CLASS V OR VI FOR FOUNDATION CONDITIONING. ENCAPSULATE WITH TYPE 2 GEOTEXTILE AS DIRECTED BY THE ENGINEER.

STATE OF NORTH CAROLINA
DEPT. OF TRANSPORTATION
DIVISION OF HIGHWAYS
RALEIGH, N.C.

1-18

ROADWAY STANDARD DRAWING FOR
METHOD OF PIPE INSTALLATION
RIGID PIPE

SHEET 2 OF 3
300.01

FLEXIBLE PIPE

Round Corrugated Steel Pipe
2 2/3 x ½ corrugation **

Diameter (inches)	Minimum cover (inches)	(Ga)	Maximum Height of Cover (feet) 16	14	12	10	8
12	12		204	256			
15	12		162	204			
18	12		135	169	239		
21	12		115	145	204		
24	12		100	126	178		
30	12		79	100	142		
36	12		65	83	117	152	
42	12		55	70	100	130	160
48	12		48	61	87	113	139
54	12			54	77	100	123
60	12				69	90	111
66	12					81	100
72	12					74	91
78	12						81
84	12						69

Round Corrugated Aluminum Pipe
2 2/3 x ½ corrugation **

Diameter (inches)	Minimum cover (inches)	(Ga)	Maximum Height of Cover (feet) 16	14	12	10	8
12	12		123	155	218	281	344
15	12		98	123	174	224	275
18	12		81	102	144	187	228
21	12		69	87	123	160	195
24	12		60	76	108	139	171
27	12			67	95	123	151
30	12			60	85	111	136
36	12			50	71	92	113
42	12				60	78	96
48	12				52	68	84
54	12				46	60	74
60	12					50	62
66	12						51
72	12						41

** FOR DIFFERENT CORRUGATIONS AND ARCH PIPES REFER TO ROADWAY DESIGN MANUAL OR MANUFACTURERS SPECIFICATION.

REFER TO THE FOLLOWING FOR PIPE SPECIFICATIONS

CSP - AASHTO M36
CAAP - AASHTO M196
HDPE - AASHTO M294
PVC - ASTM F949 or AASHTO M304

HDPE - * (Minimum fill) 2' for pipe diameters ≥ 12" and ≤ 60"
* (Maximum fill) 20' for pipe diameters ≤ 24"
17' for pipe diameters ≥ 30" and ≤ 60"

PVC - * (Minimum fill) 2' for pipe diameters ≥ 12" and ≤ 36"
* (Maximum fill) 30' for pipe diameters ≥ 12" and ≤ 36"

NOTES: FILL HEIGHTS SHOWN WERE CALCULATED USING AASHTO LRFD BRIDGE DESIGN SPECIFICATIONS

1' MINIMUM COVER FOR ALL SIDE DRAIN PIPE IN ACCORDANCE WITH THE STANDARD SPECIFICATIONS

* FILL HEIGHT IS MEASURED FROM THE TOP OF THE PIPE TO THE BOTTOM OF THE PAVEMENT STRUCTURE

RIGID PIPE

RCP - * (Minimum fill) 1' for Class IV & CLASS V
2' for Class III & Class II

* (Maximum fill) 10' - Class II pipe
20' - Class III pipe
30' - Class IV pipe
40' - Class V pipe

(For fills > 40' & < 80' use LRFD Direct Design Method)

REFER TO THE FOLLOWING FOR PIPE SPECIFICATIONS

RCP - AASHTO M170

NOTES: FILL HEIGHTS SHOWN WERE CALCULATED USING AASHTO LRFD BRIDGE DESIGN SPECIFICATIONS

1' MINIMUM COVER FOR ALL SIDE DRAIN PIPE IN ACCORDANCE WITH THE STANDARD SPECIFICATIONS

* FILL HEIGHT IS MEASURED FROM THE TOP OF THE PIPE TO THE BOTTOM OF THE PAVEMENT STRUCTURE

STATE OF NORTH CAROLINA
DEPT. OF TRANSPORTATION
DIVISION OF HIGHWAYS
RALEIGH, N.C.

1-18

ROADWAY STANDARD DRAWING FOR
METHOD OF PIPE INSTALLATION
FILL HEIGHT TABLES

SHEET 3 OF 3
300.01

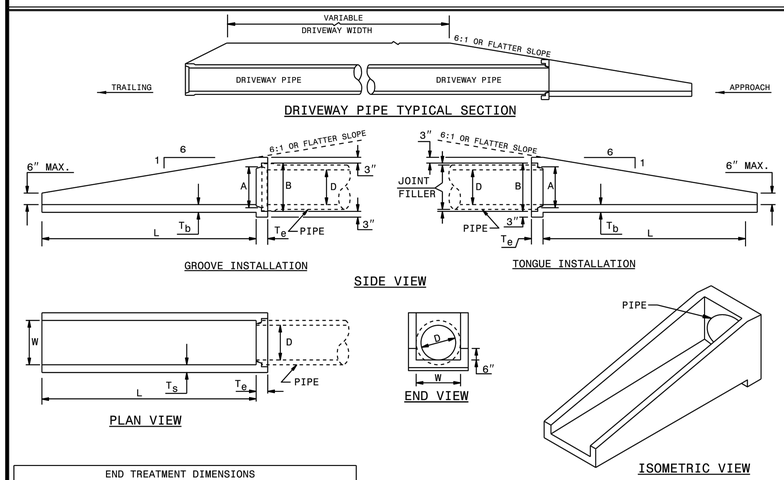

END TREATMENT DIMENSIONS							
D	L	W	T_s	T_b	T_e	A	B
15"	7'-6"	19"	4"	4"	6"	17¾"	20⅞"
18"	9'-0"	23"	4"	4"	6"	21¼"	25"
24"	12'-6"	30"	4"	4"	6"	27⅞"	32"

NOTES:
1. CONSTRUCT PIPE END SECTION USING #4 REBAR SPACED 9" EACH WAY AND MEET ALL REQUIREMENTS OF STD. SPEC. 310.
2. CHAMFER ALL EXPOSED CORNERS ¾".

STATE OF NORTH CAROLINA
DEPT. OF TRANSPORTATION
DIVISION OF HIGHWAYS
RALEIGH, N.C.

1-18

ROADWAY STANDARD DRAWING FOR
PARALLEL PIPE END SECTION
PRECAST CONCRETE SECTION FOR 15" TO 24" PIPE

SHEET 1 OF 1
310.02

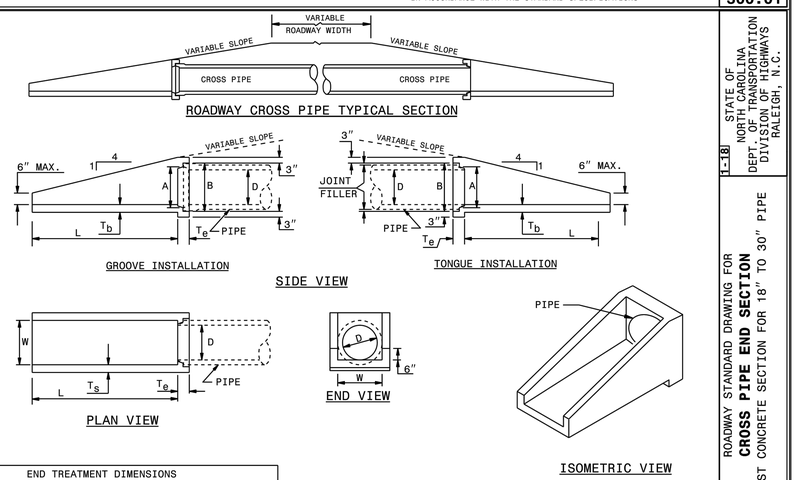

END TREATMENT DIMENSIONS							
D	L	W	T_s	T_b	T_e	A	B
18"	6'-0"	23"	4"	4"	6"	21¼"	25"
24"	8'-2"	30"	4"	4"	6"	27⅞"	32"
30"	10'-4"	37"	4"	4"	6"	33⅝"	39"

NOTES:
1. CONSTRUCT PIPE END SECTION USING #4 REBAR SPACED 9" EACH WAY AND MEET ALL REQUIREMENTS OF STD. SPEC. 310.
2. CHAMFER ALL EXPOSED CORNERS ¾".

STATE OF NORTH CAROLINA
DEPT. OF TRANSPORTATION
DIVISION OF HIGHWAYS
RALEIGH, N.C.

1-18

ROADWAY STANDARD DRAWING FOR
CROSS PIPE END SECTION
PRECAST CONCRETE SECTION FOR 18" TO 30" PIPE

SHEET 1 OF 1
310.03

STATE OF NORTH CAROLINA
DEPT. OF TRANSPORTATION
DIVISION OF HIGHWAYS
RALEIGH, N.C.

1-18

ROADWAY STANDARD DRAWING FOR
DRIVEWAY PIPE CONSTRUCTION
USING NO SPECIAL END SECTIONS

SHEET 1 OF 1
310.10

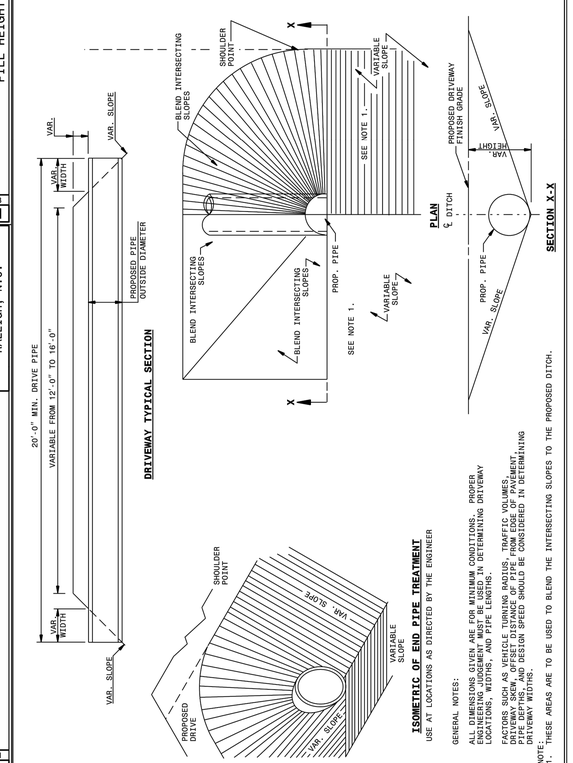

GENERAL NOTES:

ALL DIMENSIONS GIVEN ARE FOR MINIMUM CONDITIONS. PROPER ENGINEERING JUDGEMENT MUST BE USED IN DETERMINING DRIVEWAY LOCATIONS, WIDTHS, AND PIPE LENGTHS.

FACTORS SUCH AS VEHICLE TURNING RADIUS, TRAFFIC VOLUMES, DITCH SIZES, PIPE TYPES, PIPE DIAMETERS, PAVEMENT, PIPE DEPTHS, AND DESIGN SPEED SHOULD BE CONSIDERED IN DETERMINING DRIVEWAY WIDTHS.

NOTE:
1. THESE AREAS ARE TO BE USED TO BLEND THE INTERSECTING SLOPES TO THE PROPOSED DITCH.

Bateman Civil Survey Company
Engineers • Surveyors • Planners
2524 Reliance Avenue, Apex, North Carolina 27539
Phone: 919.577.1080 Fax: 919.577.1081
NCBELS FIRM No. C-2378

CHANDLER'S RIDGE
CONSTRUCTION DOCUMENTS
CONSERVATION SUBDIVISION

410 W. YOUNG ST.
ROLESVILLE, NC
WAKE COUNTY

STORMWATER DETAILS

Project Engineer:	TSS
Designed By:	TEP
Drawn By:	TEP
Checked By:	TSS
Scale:	
Date:	06/17/2020
Project Number:	P170347

SHEET
C920

REV	DESCRIPTION	DATE
03	CONSTRUCTION DOCUMENTS 3rd SUBMITTAL	06/17/2020
02	CONSTRUCTION DOCUMENTS 2nd SUBMITTAL	04/15/2020
01	CONSTRUCTION DOCUMENTS 1st SUBMITTAL	01/13/2020

REVISIONS

P:\2017 Projects\170347 Chandlers Ridge\Eng\CAD\DWG\TP SHEET\P_170347_C920_EC_DETAILS.dwg

STORMWATER DETAILS

ROADWAY STANDARD DRAWING FOR CONCRETE ENDWALL FOR SINGLE AND DOUBLE PIPE CULVERTS 15" THRU 48" PIPE - 90° SKEW

STATE OF NORTH CAROLINA
DEPT. OF TRANSPORTATION
DIVISION OF HIGHWAYS
RALEIGH, N.C.
1-18

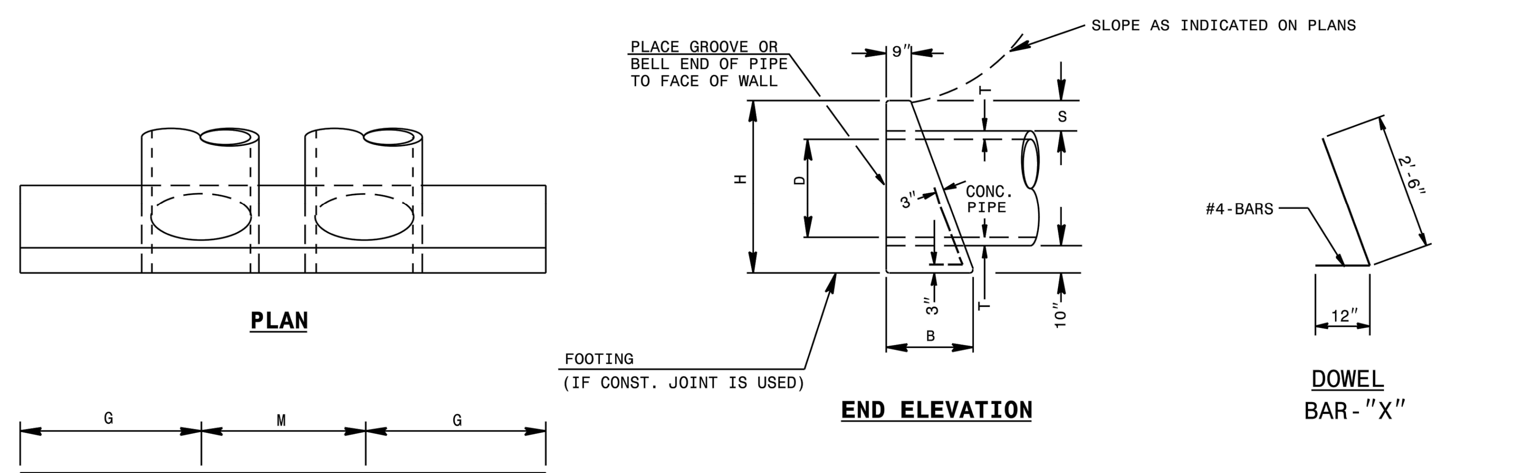

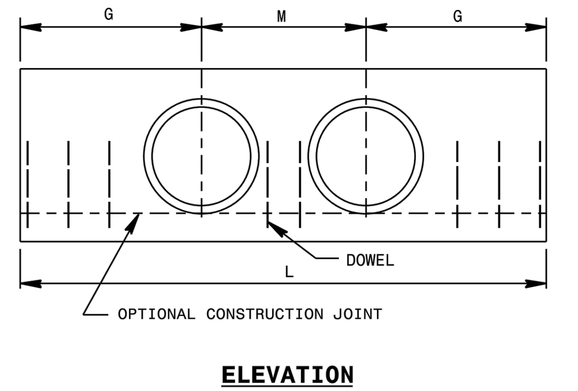

DOWELS IN ENDWALL WITH REINFORCED CONCRETE PIPE																		
LOC.	PIPE	SINGLE PIPE									DOUBLE PIPE							
	DIA.	15"	18"	24"	30"	36"	42"		48"		15"	18"	24"	30"	36"	42"		48"	
	BARS	"X"	"X"	"X"	"X"	"X"	"X"	Y*	"X"	Y*	"X"	"X"	"X"	"X"	"X"	"X"	Y*	"X"	Y*
G	QTY.	2	2	3	3	4	4	2	5	2	2	2	3	3	4	4	2	5	2
M	QTY.	-	-	-	-	-	-		-		1	1	2	2	2	2		3	
G	QTY.	2	2	3	3	4	4		5		2	2	3	3	4	4		5	
TOTAL LBS.		9	9	14	14	19	55		65		12	12	19	19	23	77		92	

DIMENSIONS AND CONCRETE QUANTITIES USING CONCRETE PIPE										
	COMMON DIMENSIONS					SINGLE PIPE		DOUBLE PIPE		
D	H	B	G	T	S	L	YD^3	M	L	YD^3
15"	3'-3"	1'-8"	2'-9"	2¼"	9½"	5'-6"	0.7	2'-2"	7'-8"	1.0
18"	3'-7"	1'-10"	3'-2"	2½"	10"	6'-4"	1.0	2'-7"	8'-11"	1.3
24"	4'-2"	2'-1"	4'-0"	3"	10"	8'-0"	1.5	3'-5"	11'-5"	2.0
30"	5'-0"	2'-6"	4'-7"	4¼"	11½"	9'-2"	2.3	4'-3"	13'-5"	3.1
36"	5'-8"	2'-8"	5'-6"	4¾"	11½"	11'-0"	3.4	5'-0"	16'-0"	4.5
42"	6'-2"	3'-1"	6'-4"	5¼"	11½"	12'-8"	4.5	5'-10"	18'-6"	6.0
48"	6'-9"	3'-5"	7'-2"	5¾"	11½"	14'-4"	6.0	6'-8"	21'-0"	8.0

*SEE SHEET 3

SHEET 1 OF 3
838.01

ROADWAY STANDARD DRAWING FOR CONCRETE CATCH BASIN 12" THRU 54" PIPE

STATE OF NORTH CAROLINA
DEPT. OF TRANSPORTATION
DIVISION OF HIGHWAYS
RALEIGH, N.C.
1-18

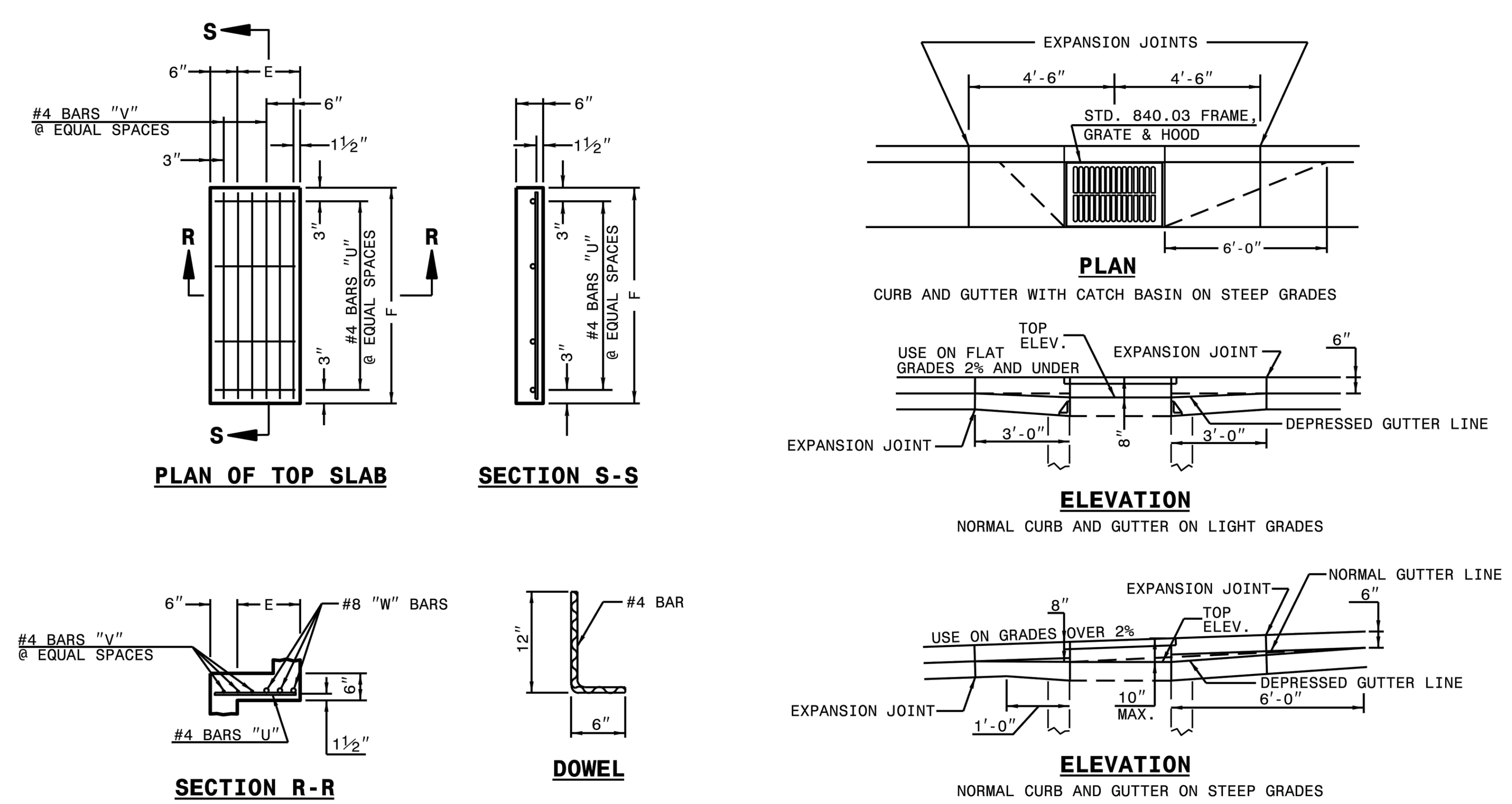

MINIMUM DIMENSIONS AND QUANTITIES FOR CONCRETE CATCH BASIN(BASED ON MIN. HEIGHT, H, WITH NO RISER) *																			
DIMENSIONS OF BOX AND PIPE						COVER DIMENSION									CU.YDS. CONC. IN BOX			DEDUCTIONS ONE PIPE	
PIPE	SPAN	WIDTH	WIDTH	SPAN	MIN. HEIGHT			BARS-U		BARS-V		BARS-W		TOTAL LBS.	TOP SLAB	BOTTOM SLAB	TOT. CONC. FOR MINIMUM HEIGHT, H		
D	A	B	C	G	H	E	F	NO.	LENGTH	NO.	LENGTH	NO.	LENGTH					C.M.	R.C.
12"	3'-0"	2'-2"	--	--	2'-9"	--	--	--	--	--	--	--	--	--	--	0.235	0.772	0.015	0.026
15"	3'-0"	2'-2"			3'-0"											0.235	0.829	0.023	0.036
18"	3'-0"	2'-2"			3'-3"											0.235	0.887	0.033	0.049
24"	3'-0"	2'-2"			3'-9"											0.235	1.001	0.059	0.085
30"	3'-0"	2'-2"	3'-4"		4'-3"	1'-2"	4'-0"	4	1'-5"	2	3'-9"	3	3'-9"	39	0.123	0.321	1.433	0.092	0.127
36"	3'-0"	2'-2"	3'-10"		4'-9"	1'-8"	4'-0"	4	1'-11"	3	3'-9"	3	3'-9"	43	0.161	0.358	1.714	0.132	0.178
42"	3'-0"	2'-2"		4'-5"	5'-3"	1'-5"	3'-2"	4	1'-8"	2	2'-11"	3	2'-11"	32	0.112	0.318	1.738	0.180	0.243
48"	3'-0"	2'-2"		5'-0"	5'-9"	2'-0"	3'-2"	4	2'-3"	3	2'-11"	3	2'-11"	35	0.145	0.352	2.052	0.235	0.317
54"	3'-0"	2'-2"		5'-7"	6'-3"	2'-7"	3'-2"	4	2'-10"	5	2'-11"	3	2'-11"	41	0.180	0.386	2.387	0.297	0.401

* RISER HAS .228 CUBIC YARDS OF CONCRETE PER FOOT HEIGHT

SHEET 2 OF 2
840.02

ROADWAY STANDARD DRAWING FOR CONCRETE DROP INLET 12" THRU 30" PIPE

STATE OF NORTH CAROLINA
DEPT. OF TRANSPORTATION
DIVISION OF HIGHWAYS
RALEIGH, N.C.
1-18

GENERAL NOTES:

USE CLASS "B" CONCRETE THROUGHOUT.

PROVIDE ALL DROP INLETS OVER 3'-6" IN DEPTH WITH STEPS 12" ON CENTER. USE STEPS WHICH COMPLY WITH STD. DRAWING 840.66.

OPTIONAL CONSTRUCTION - MONOLITHIC POUR 2" KEYWAY OR #4 BAR DOWELS AT 12" CENTERS AS DIRECTED BY THE ENGINEER.

USE FORMS FOR THE CONSTRUCTION OF THE BOTTOM SLAB.

IF REINFORCED CONCRETE PIPE IS SET IN BOTTOM SLAB OF BOX, ADD TO SLAB AS SHOWN ON STD. NO. 840.00.

CONSTRUCT WITH PIPE CROWNS MATCHING.

SEE STANDARD DRAWING 840.25 FOR ATTACHMENT OF FRAMES AND GRATES NOT SHOWN.

INSTALL 2" WEEPHOLES AS DIRECTED BY THE ENGINEER.

INSTALL STONE DRAINS, OF A MINIMUM OF 1 CUBIC FOOT OF NO. 78M STONE IN A POROUS FABRIC BAG OR WRAP, AT EACH WEEP HOLE OR AS DIRECTED BY THE ENGINEER.

CHAMFER ALL EXPOSED CORNERS 1".

DRAWING NOT TO SCALE.

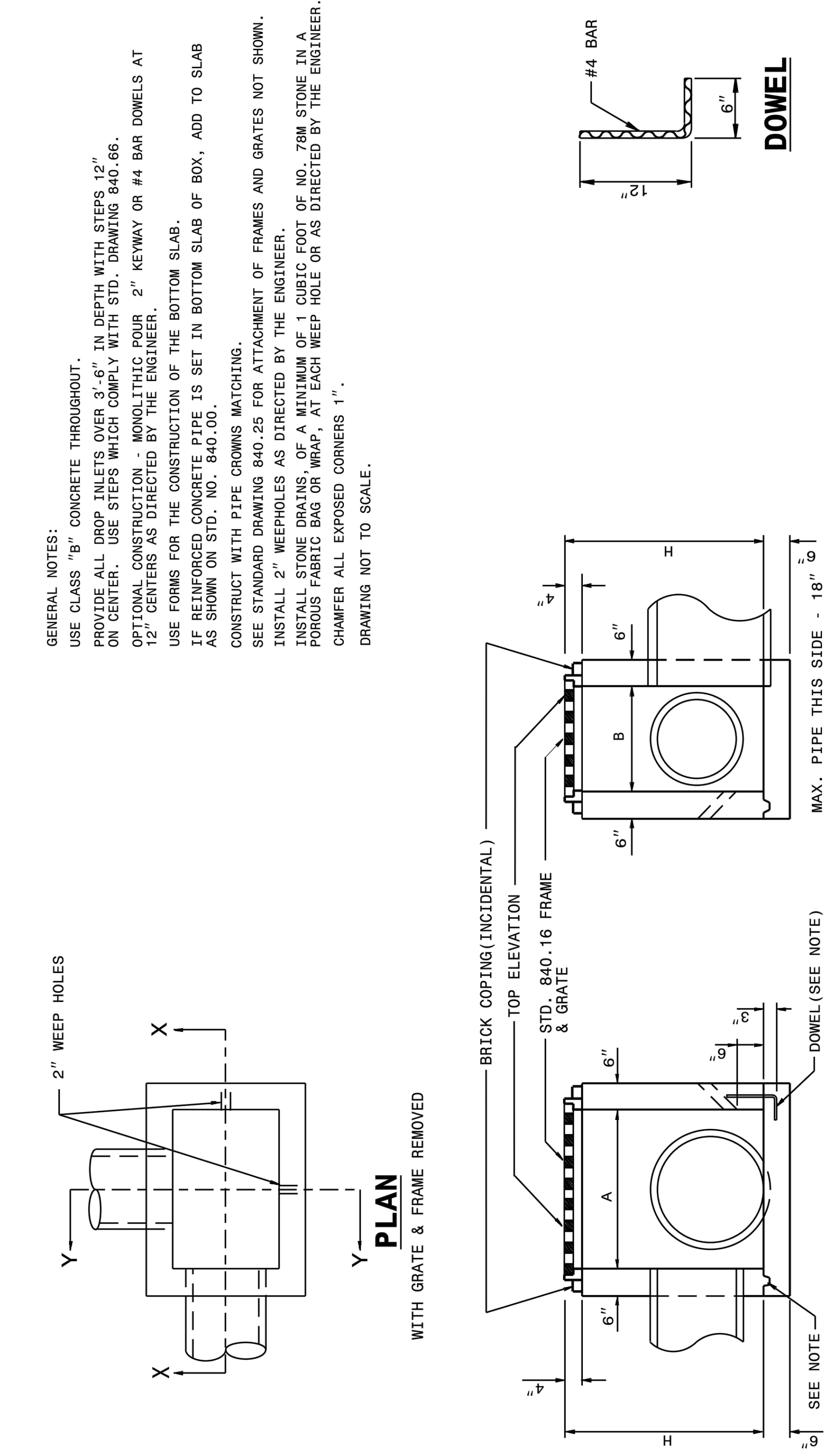

DIMENSIONS AND QUANTITIES FOR DROP INLET(BASED ON MIN. HEIGHT, H)								
DIMENSIONS OF BOX & PIPE				CUBIC YARDS CONC. IN BOX			DEDUCTIONS FOR ONE PIPE	
PIPE	SPAN	WIDTH	MIN. HEIGHT	BOTTOM SLAB	WALL PER FT. HT.	TOTAL CONCRETE FOR MINIMUM HEIGHT, H		
D	A	B	H				C.M.	R.C.
12"	3'-0"	2'-0"	2'-0"	0.222	0.222	0.592	0.015	0.026
15"			2'-3"			0.648	0.023	0.036
18"			2'-6"			0.703	0.033	0.049
24"			3'-0"			0.814	0.059	0.085
30"	3'-0"	2'-0"	3'-6"	0.222	0.222	0.925	0.092	0.127

SHEET 1 OF 1
840.14

ROADWAY STANDARD DRAWING FOR FRAME, GRATES, AND HOOD FOR USE ON STANDARD CATCH BASIN

STATE OF NORTH CAROLINA
DEPT. OF TRANSPORTATION
DIVISION OF HIGHWAYS
RALEIGH, N.C.
1-18

NOTE: USE TYPE "E", "F" AND "G" GRATE UNLESS OTHERWISE NOTED.

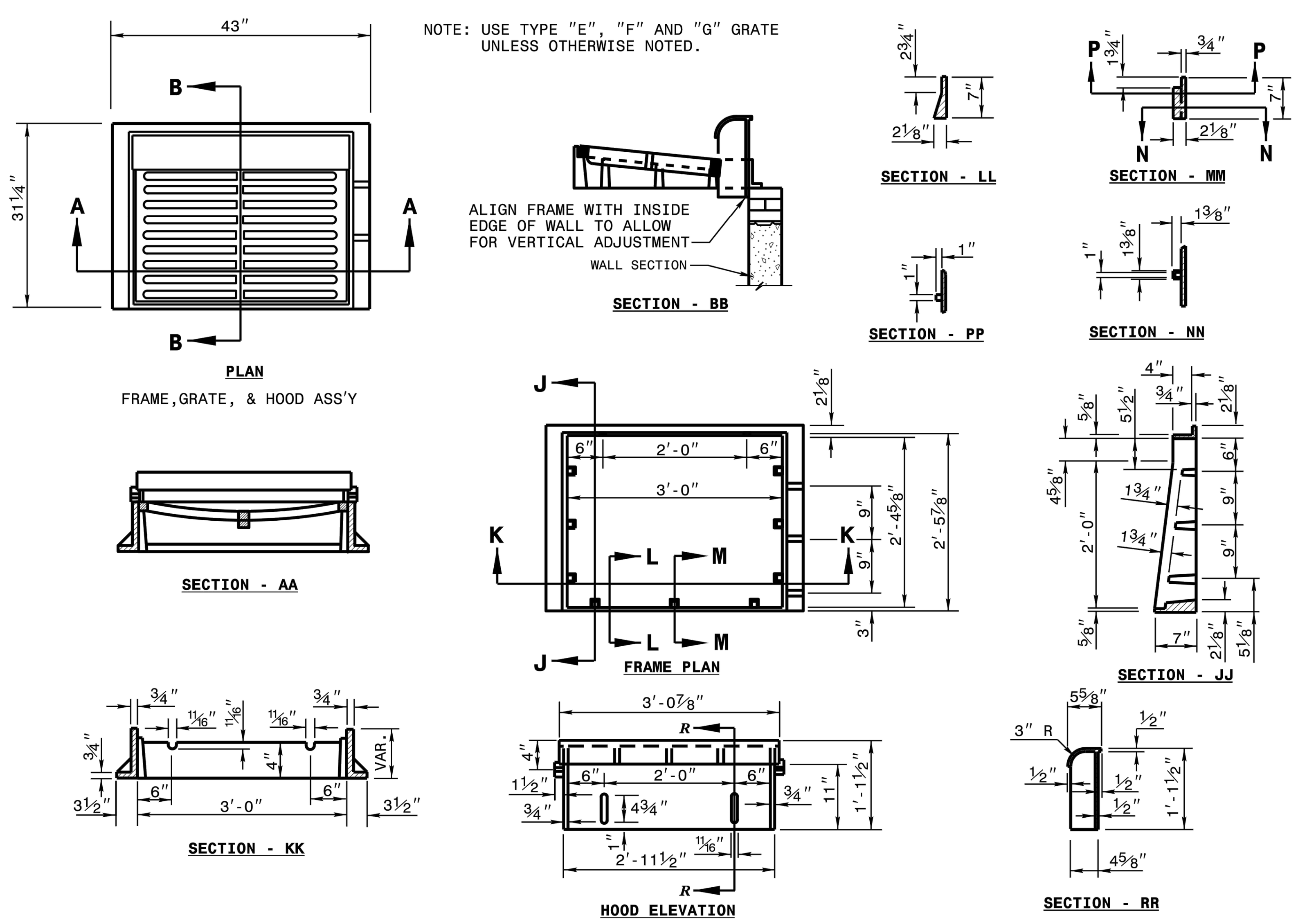

SHEET 1 OF 2
840.03

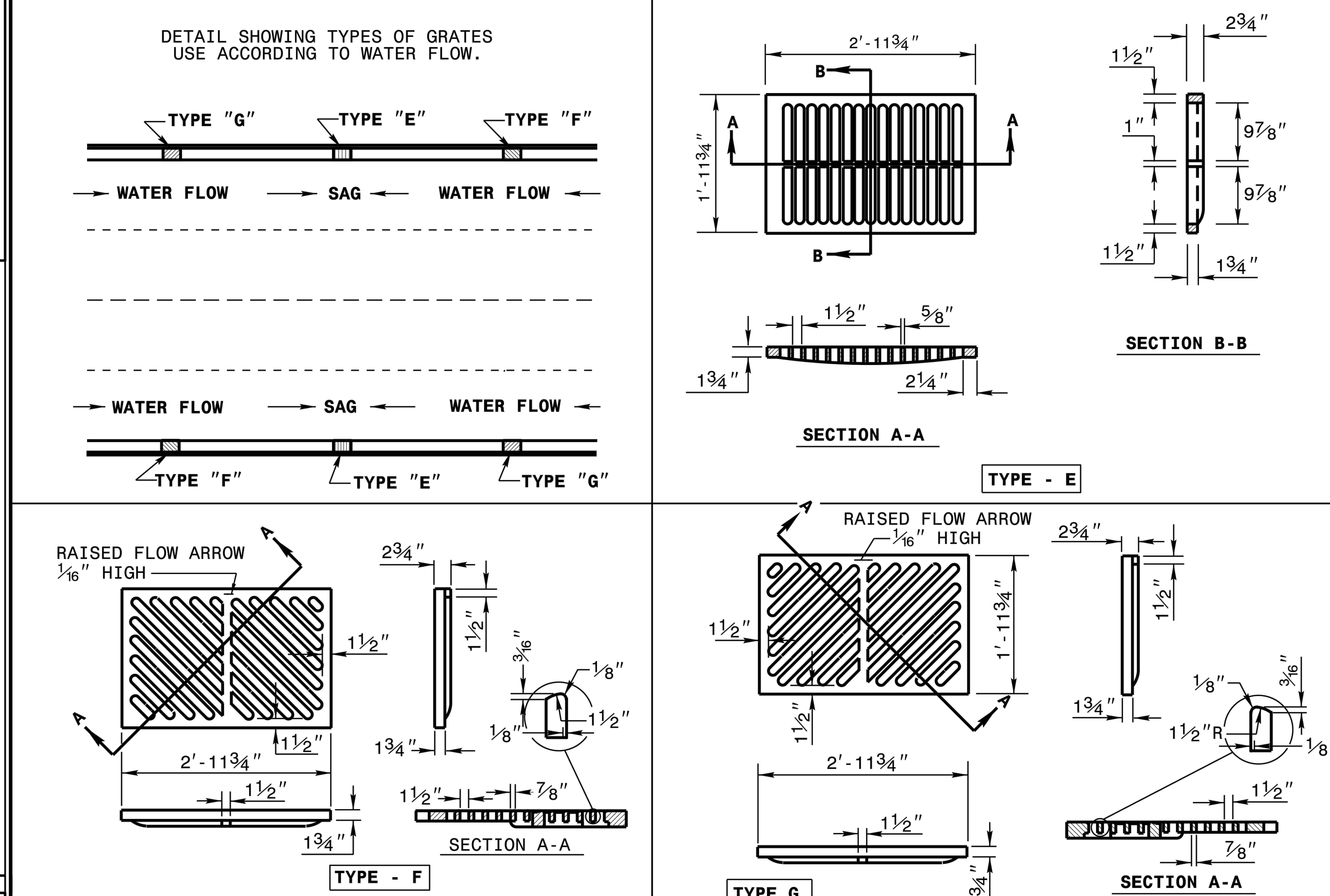

SHEET 2 OF 2
840.03

CHANDLER'S RIDGE
CONSTRUCTION DOCUMENTS
CONSERVATION SUBDIVISION
410 W. YOUNG ST.
ROLESVILLE, NC
WAKE COUNTY

Bateman Civil Survey Company
Engineers • Surveyors • Planners
2524 Reliance Avenue, Apex, North Carolina 27539
Phone: 919.577.1080 Fax: 919.577.1081
NCBELS FIRM No. C-2378

NORTH CAROLINA PROFESSIONAL SEAL 20234 ENGINEER THOMAS S. SPEIGHT, JR. 6/17/2020

Project Engineer:	TSS
Designed By:	TEP
Drawn By:	TEP
Checked By:	TSS
Scale:	
Date:	06/17/2020
Project Number:	P170347

SHEET
C921

REV	DESCRIPTION	DATE
03	CONSTRUCTION DOCUMENTS 3rd SUBMITTAL	06/17/2020
02	CONSTRUCTION DOCUMENTS 2nd SUBMITTAL	04/15/2020
01	CONSTRUCTION DOCUMENTS 1st SUBMITTAL	01/13/2020

REVISIONS

P:\2017 Projects\170347 Chandlers Ridge\Eng\CAD\DWG\TP SHEET\P_170347_C920_EC_DETAILS.dwg

EROSION CONTROL CONSTRUCTION SEQUENCE AND NOTES

1. CONTACT KARYN PAGEAU WITH WAKE COUNTY ENVIRONMENTAL SERVICES AT (919) 796-8769 BEFORE ANY LAND DISTURBING ACTIVITIES BEGIN.
2. INSPECT THE EROSION CONTROL MEASURES INSTALLED DURING CLEARING OPERATIONS FOR COMPLIANCE WITH THE APPROVED EROSION CONTROL PLAN. REPAIR ANY DEFICIENCIES IN THE MEASURES PRIOR TO BEGINNING GRADING OPERATIONS.
3. INSTALL NEW CONSTRUCTION ENTRANCE AT LOCATIONS DEPICTED FOR EACH LOT IN THE PLANS AND CLOSE THE FIRST CONSTRUCTION ENTRANCE.
4. INSTALL ALL OTHER ADDITIONAL PERIMETER EROSION CONTROL DEVICES INDICATED ON THE PLANS. INSTALL SILT FENCE AROUND WORK AREA PRIOR TO BEGINNING WIDENING WORK.
5. ERECT STRUCTURES AND OTHER SURFACE FEATURES SUCH AS DRIVEWAYS AND SIDEWALKS, WERE APPLICABLE. ESTABLISH FINAL GRADES. ONCE REACHED, AND FINISHED SLOPES ARE DRESSED, SEED AND MULCH ALL DISTURBED AREAS IN ACCORDANCE WITH THE FOLLOWING PROVISIONS FOR GROUND COVER, AND IN ACCORDANCE WITH THE SEEDING SPECIFICATIONS ON THIS SHEET.
6. PURSUANT TO G.S. 113A-57(2), THE ANGLE FOR GRADED SLOPES AND FILLS SHALL BE NO GREATER THAN THE ANGLE THAT CAN BE RETAINED BY VEGETATIVE COVER OR OTHER ADEQUATE EROSION-CONTROL DEVICES OR STRUCTURES.
7. PROVISIONS FOR PERMANENT GROUNDCOVER SUFFICIENT TO RESTRAIN EROSION ON A SITE WHERE LAND DISTURBING ACTIVITIES HAVE TEMPORARILY OR PERMANENTLY CEASED MUST BE ACCOMPLISHED FOR ALL DISTURBED AREAS WITHIN 14 CALENDAR DAYS FROM THE LAST LAND DISTURBING ACTIVITY.
   - 7.1. ALL PERIMETER DIKES, SWALES, DITCHES, PERIMETER SLOPES AND ALL SLOPES STEEPER THAN 3 HORIZONTAL TO 1 VERTICAL (3:1) SHALL BE PROVIDED TEMPORARY OR PERMANENT STABILIZATION WITH GROUND COVER AS SOON AS PRACTICABLE BUT IN ANY EVENT WITHIN 7 CALENDAR DAYS FROM THE LAST LAND-DISTURBING ACTIVITY.
8. OTHER SLOPE STABILIZATION REQUIREMENTS/EXEMPTIONS:
   - 8.1. EXTENSIONS OF TIME MAY BE APPROVED BY THE PERMITTING AUTHORITY BASED ON WEATHER OR OTHER SITE-SPECIFIC CONDITIONS THAT MAKE COMPLIANCE IMPRACTICABLE.
   - 8.2. ALL SLOPES 50' IN LENGTH OR GREATER SHALL APPLY THE GROUND COVER WITHIN 7 DAYS EXCEPT WHEN THE SLOPE IS FLATTER THAN 4:1. SLOPES LESS THAN 50' SHALL APPLY GROUND COVER WITHIN 14 DAYS EXCEPT WHEN SLOPES ARE STEEPER THAN 3:1, WHEN THE 7-DAY REQUIREMENT APPLIES.
   - 8.3. ANY SLOPED AREA FLATTER THAN 4:1 SHALL BE EXEMPT FROM THE 7-DAY GROUND COVER REQUIREMENT.
   - 8.4. SLOPES 10' OR LESS IN LENGTH SHALL BE EXEMPT FROM THE 7-DAY GROUND COVER REQUIREMENT EXCEPT WHEN THE SLOPE IS STEEPER THAN 2:1.
   - 8.5. ALL APPLICABLE EROSION AND SEDIMENT CONTROL MEASURES SHALL BE MAINTAINED UNTIL STABLE PERMANENT VEGETATION HAS BEEN ESTABLISHED.
9. ONCE DENSE GROUND COVER HAS BEEN ESTABLISHED, TEMPORARY EROSION CONTROL DEVICES MAY BE REMOVED. BARE AREAS REMAINING IN DITCHES AFTER REMOVAL OF TEMPORARY MEASURES SHALL BE IMMEDIATELY SEEDED AND PROTECTED WITH APPROPRIATE ROLLED EROSION CONTROL PRODUCT. ALL OTHER REMAINING DISTURBED AREAS SHALL BE IMMEDIATELY SEEDED IN ACCORDANCE WITH THE SEEDING SPECIFICATION. ONCE LAYDOWN AREAS ARE NO LONGER OF USE, THE CONTRACTOR SHALL RESTORE ALL DISTURBED AREAS TO PRE-CONSTRUCTION CONDITION AND SEED AND MULCH IN ACCORDANCE WITH THE SEEDING SPECIFICATIONS.
10. AS LOTS ARE STABILIZED, SILT FENCE SHALL BE INSTALLED BETWEEN LOTS TO PREVENT SEDIMENT LOSS FROM ACTIVELY DISTURBED LOTS ONTO THE LOWER PROPERTIES.

EROSION CONTROL MEASURES SELF INSPECTION

1. THE FINANCIALLY RESPONSIBLE PARTY, LANDOWNER, OR THEIR AGENT SHALL CONDUCT INSPECTIONS OF ALL EROSION CONTROL DEVICES AND PRACTICES IN ACCORDANCE WITH NCDENR DIVISION OF LAND RESOURCES REQUIREMENTS FOR SELF INSPECTION.
2. A SELF INSPECTION SHALL BE PERFORMED AFTER EACH PHASE OF THE APPROVED SEDIMENT AND EROSION CONTROL PLAN IS COMPLETE. THIS SHALL INCLUDE BUT SHALL NOT BE LIMITED TO THE FOLLOWING:
   - 2.1. INSTALLATION OF PERIMETER EROSION AND SEDIMENT CONTROL MEASURES.
   - 2.2. CLEARING AND GRUBBING OF EXISTING GROUND COVER.
   - 2.3. COMPLETION OF ANY PHASE OF GRADING OF SLOPES OR FILLS.
   - 2.4. INSTALLATION OF STORM DRAINAGE FACILITIES.
   - 2.5. COMPLETION OF CONSTRUCTION OR DEVELOPMENT
   - 2.6. ESTABLISHMENT OF PERMANENT GROUND COVER SUFFICIENT TO RESTRAIN EROSION.
3. PERSON PERFORMING INSPECTION MAY USE THE STANDARD FORM PROVIDED BY NCDENR DIVISION OF LAND RESOURCES OR MAY MARK UP A SINGLE COPY OF THE APPROVED SEDIMENT AND EROSION CONTROL PLAN. ANY DOCUMENTATION OF THE SELF INSPECTIONS SHALL BE MAINTAINED ON-SITE AND MADE AVAILABLE TO THE EROSION CONTROL INSPECTOR.
4. THE SEDIMENTATION POLLUTION CONTROL ACT WAS AMENDED IN 2006 TO REQUIRE THAT PERSONS RESPONSIBLE FOR LAND-DISTURBING ACTIVITIES INSPECT A PROJECT AFTER EACH PHASE OF THE PROJECT TO MAKE SURE THAT THE APPROVED EROSION AND SEDIMENTATION CONTROL PLAN IS BEING FOLLOWED. RULES DETAILING THE DOCUMENTATION OF THESE INSPECTIONS TOOK EFFECT OCTOBER 1, 2010. AS OF AUGUST 1, 2013 THE SELF-INSPECTION PROGRAM WAS COMBINED WITH THE WEEKLY SELF-MONITORING PROGRAM OF THE NPDES STORMWATER PERMIT FOR CONSTRUCTION ACTIVITIES. THE FOCUS OF THE SELF-INSPECTION REPORT IS THE INSTALLATION AND MAINTENANCE OF EROSION AND SEDIMENTATION CONTROL MEASURES ACCORDING TO THE APPROVED PLAN. THE INSPECTIONS MUST BE CONDUCTED AFTER EACH PHASE OF THE PROJECT, AND CONTINUED UNTIL PERMANENT GROUND COVER IS ESTABLISHED IN ACCORDANCE WITH NCGS 113A-54.1 AND 15A NCAC 4B.0131. A COMBINED SELF-INSPECTION / SELF-MONITORING FORM IS AVAILABLE AT THE FOLLOWING WEB ADDRESS: http://portal.ncdenr.org/web/lr/erosion . IF YOU HAVE ANY QUESTIONS OR CANNOT ACCESS THE FORM, PLEASE CONTACT THE LAND QUALITY SECTION AT (910) 433-3300.

STANDARD SEDIMENT AND EROSION CONTROL PLAN FOR SINGLE FAMILY LOTS APPLICABLE CONDITIONS

1. THIS STANDARD PLAN IS FOR LOTS WITH A DISTURBED AREA OF LESS THAN 1 ACRE AND A TOTAL SITE DISTURBANCE LESS THAN 5 ACRES. IF THE DISTURBED AREA IS GREATER THAN 1 ACRE (ON A SINGLE LOT OR MULTIPLE LOTS THAT ARE MASS GRADED) A CUSTOM EROSION CONTROL PLAN MUST BE PREPARED AND SUBMITTED ONLINE FOR THE 30-DAY REVIEW CYCLE AND PAY THE EROSION CONTROL PLAN REVIEW AND GRADING PERMIT FEES.
2. THIS STANDARD PLAN IS FOR LOTS THAT ARE "FINISHED, PAD READY", OR AT FINAL GRADE. MASS GRADING WITH FULL STABILIZATION HAS ALREADY OCCURRED OR MASS GRADING WILL NOT OCCUR.
3. THE STANDARD PLAN IS NOT FOR SITES LOCATED IN A HIGH QUALITY WATER (HQW) ZONE AND PROPERTIES THAT CONTAIN JURISDICTIONAL WETLANDS OR STREAMS WITHIN 100 FEET OF THE LOTS.
4. THIS PLAN SHALL NOT BE USED WITH LOTS THAT HAVE OFF-SITE SEPTIC EASEMENTS OR IF ANY PART OF THE SEPTIC SYSTEM OR REPAIR AREA IS LOCATED WITHIN 10 FT. OF A PROPERTY LINE.
5. ADDITIONALLY, THIS PLAN SHALL NOT BE USED FOR LOTS WITH:
   - a. BASEMENTS
   - b. GREATER THAN 5 FT. OF ELEVATION BETWEEN THE TOE OF SLOPE FOR EACH LOT AND/OR LOTS WITH GREATER THAN 10 FT. ELEVATION DIFFERENCE OF THE DISTURBED AREA FROM FRONT TO BACK
   - c. CONCENTRATED FLOW/SWALES BETWEEN THEM
   - d. STORMWATER CONTROL MEASURES (SCMS) FOR THE INDIVIDUAL LOT
   - e. RECEIVING OFFSITE CONCENTRATED STORMWATER.

TYPICAL CONSTRUCTION SEQUENCE FOR SINGLE FAMILY LOTS SEDIMENT AND EROSION CONTROL

1. WAKE COUNTY RESERVES THE RIGHT TO REQUIRE A SITE SPECIFIC EROSION CONTROL PLAN TO BE PREPARED AND SUBMITTED FOR THE 30-DAY REVIEW CYCLE.
2. AS OF APRIL 1, 2019 APPLICANTS MUST APPLY ONLINE FOR NCG-01 PERMIT COVERAGE FROM NCDEQ. THIS REQUIREMENT IS IN ADDITION TO THE WAKE COUNTY LAND DISTURBANCE PERMIT.
3. OBTAIN ALL NECESSARY PERMITS AND CERTIFICATES. DOWNLOAD STANDARD SEDIMENT AND EROSION CONTROL PLAN FOR SINGLE FAMILY LOTS FROM WWW.WAKEGOV.COM.
4. INSTALL TREE PROTECTION FENCE IF REQUIRED. INSTALL GRAVEL CONSTRUCTION ENTRANCE, SILT FENCE, SILT FENCE OUTLETS AND ADDITIONAL MEASURES AS NEEDED. CLEAR ONLY AS NECESSARY TO INSTALL DEVICES. PROVIDE GROUNDCOVER FOR ALL DISTURBED AREAS.
5. CALL ENVIRONMENTAL CONSULTANT FOR AN ONSITE INSPECTION BY THE ENVIRONMENTAL CONSULTANT TO OBTAIN A CERTIFICATE OF COMPLIANCE.
6. BEGIN CONSTRUCTION, BUILDING, CLEARING AND GRUBBING. MAINTAIN EROSION CONTROL DEVICES AS NEEDED.
7. STABILIZE SITE AS AREAS ARE BROUGHT UP TO FINISH GRADE WITH VEGETATION, PAVING, DITCH LININGS, ETC. PROVIDE GROUNDCOVER FOR DENUDED AREAS PER NPDES GROUND STABILIZATION TIMEFRAMES.
8. WHEN CONSTRUCTION IS COMPLETE, AND ALL AREAS ARE PERMANENTLY STABILIZED AND EROSION CONTROL MEASURES ARE REMOVED, CALL ENVIRONMENTAL CONSULTANT FOR AN INSPECTION.
9. OBTAIN A CERTIFICATE OF COMPLETION.

Seedbed Preparation:

1. Chisel compacted areas and spread topsoil three inches deep over adverse soil conditions, if available.
2. Rip the entire area to six inches deep.
3. Remove all loose rock, roots and other obstructions, leaving surface reasonable smooth and uniform.
4. Apply agricultural lime, fertilizer and superphosphate uniformly and mix with soil (see mixture below).
5. Continue tillage until a well-pulverized, firm, reasonably uniform sedbed is prepared four to six inches deep.
6. Seed on a freshly prepared seedbed and cover seed lightly with seeding equipment or cultipack after seeding.
7. Mulch immediately after seeding and anchor mulch.
8. Inspect all seeded areas and make necessary repairs or reseedings within the planting season, if possible. If stand should be more than 60% damaged, re- establish following the original lime, fertilizer and seeding rates.

Mixture:

Agricultural Limestone - 2 tons/acre (3 tons/acre in clay soils)
Fertilizer - 1,000 lbs/acre - 10-10-10
Superphosphate - 500 lbs/acre - 20% analysis
Mulch - 2 tons/acre - small grain straw
Anchor - Asphalt emulsion at 300 gallons/acre

PERMANENT SEEDING REQUIREMENTS FOR SHOULDERS, SIDE DITCHES, SLOPES (MAX. 3:1)

Date	Type	Planting Rate
Aug 15 - Nov 1	Tall Fescue	300 lbs/acre
Nov 1 - Mar 1	Tall Fescue & Abruzzi Rye	300 lbs/acre
Mar 1 - Apr 15	Tall Fescue	300 lbs/acre
Apr 15 - Jun 30	Hulled Common Bermudagrass	25 lbs/acre
Jul 1 - Aug 15	Tall Fescue AND Browntop Millet or Sorghum-Sudan Hybrids***	125 lbs/acre (Tall Fescue); 35 lbs/acre Browntop Millet); 30 lbs/acre (Sorghum-Sudan Hybrids)

REV	DESCRIPTION	DATE
03	CONSTRUCTION DOCUMENTS 3rd SUBMITTAL	06/17/2020
02	CONSTRUCTION DOCUMENTS 2nd SUBMITTAL	04/15/2020
01	CONSTRUCTION DOCUMENTS 1st SUBMITTAL	01/13/2020

REVISIONS

P:\2017 Projects\170347 Chanders Ridge\Eng\CAD\DWG\TP SHEET\P_170347_C920_EC_DETAILS.dwg

PART III
SELF-INSPECTION, RECORDKEEPING AND REPORTING

SECTION A: SELF-INSPECTION

Self-inspections are required during normal business hours in accordance with the table below. When adverse weather or site conditions would cause the safety of the inspection personnel to be in jeopardy, the inspection may be delayed until the next business day on which it is safe to perform the inspection. In addition, when a storm event of equal to or greater than 1.0 inch occurs outside of normal business hours, the self-inspection shall be performed upon the commencement of the next business day. Any time when inspections were delayed shall be noted in the Inspection Record.

Inspect	Frequency (during normal business hours)	Inspection records must include:
(1) Rain gauge maintained in good working order	Daily	Daily rainfall amounts. If no daily rain gauge observations are made during weekend or holiday periods, and no individual-day rainfall information is available, record the cumulative rain measurement for those un-attended days (and this will determine if a site inspection is needed). Days on which no rainfall occurred shall be recorded as "zero." The permittee may use another rain-monitoring device approved by the Division.
(2) E&SC Measures	At least once per 7 calendar days and within 24 hours of a rain event ≥ 1.0 inch in 24 hours	1. Identification of the measures inspected, 2. Date and time of the inspection, 3. Name of the person performing the inspection, 4. Indication of whether the measures were operating properly, 5. Description of maintenance needs for the measure, 6. Description, evidence, and date of corrective actions taken.
(3) Stormwater discharge outfalls (SDOs)	At least once per 7 calendar days and within 24 hours of a rain event ≥ 1.0 inch in 24 hours	1. Identification of the discharge outfalls inspected, 2. Date and time of the inspection, 3. Name of the person performing the inspection, 4. Evidence of indicators of stormwater pollution such as oil sheen, floating or suspended solids or discoloration, 5. Indication of visible sediment leaving the site, 6. Description, evidence, and date of corrective actions taken.
(4) Perimeter of site	At least once per 7 calendar days and within 24 hours of a rain event ≥ 1.0 inch in 24 hours	If visible sedimentation is found outside site limits, then a record of the following shall be made: 1. Actions taken to clean up or stabilize the sediment that has left the site limits, 2. Description, evidence, and date of corrective actions taken, and 3. An explanation as to the actions taken to control future releases.
(5) Streams or wetlands onsite or offsite (where accessible)	At least once per 7 calendar days and within 24 hours of a rain event ≥ 1.0 inch in 24 hours	If the stream or wetland has increased visible sedimentation or a stream has visible increased turbidity from the construction activity, then a record of the following shall be made: 1. Description, evidence and date of corrective actions taken, and 2. Records of the required reports to the appropriate Division Regional Office per Part III, Section C, Item (2)(a) of this permit.
(6) Ground stabilization measures	After each phase of grading	1. The phase of grading (installation of perimeter E&SC measures, clearing and grubbing, installation of storm drainage facilities, completion of all land-disturbing activity, construction or redevelopment, permanent ground cover). 2. Documentation that the required ground stabilization measures have been provided within the required timeframe or an assurance that they will be provided as soon as possible.

NOTE: The rain inspection resets the required 7 calendar day inspection requirement.

PART III
SELF-INSPECTION, RECORDKEEPING AND REPORTING

SECTION B: RECORDKEEPING

1. E&SC Plan Documentation

The approved E&SC plan as well as any approved deviation shall be kept on the site. The approved E&SC plan must be kept up-to-date throughout the coverage under this permit. The following items pertaining to the E&SC plan shall be kept on site and available for inspection at all times during normal business hours.

Item to Document	Documentation Requirements
(a) Each E&SC measure has been installed and does not significantly deviate from the locations, dimensions and relative elevations shown on the approved E&SC plan.	Initial and date each E&SC measure on a copy of the approved E&SC plan or complete, date and sign an inspection report that lists each E&SC measure shown on the approved E&SC plan. This documentation is required upon the initial installation of the E&SC measures or if the E&SC measures are modified after initial installation.
(b) A phase of grading has been completed.	Initial and date a copy of the approved E&SC plan or complete, date and sign an inspection report to indicate completion of the construction phase.
(c) Ground cover is located and installed in accordance with the approved E&SC plan.	Initial and date a copy of the approved E&SC plan or complete, date and sign an inspection report to indicate compliance with approved ground cover specifications.
(d) The maintenance and repair requirements for all E&SC measures have been performed.	Complete, date and sign an inspection report.
(e) Corrective actions have been taken to E&SC measures.	Initial and date a copy of the approved E&SC plan or complete, date and sign an inspection report to indicate the completion of the corrective action.

2. Additional Documentation to be Kept on Site

In addition to the E&SC plan documents above, the following items shall be kept on the site and available for inspectors at all times during normal business hours, unless the Division provides a site-specific exemption based on unique site conditions that make this requirement not practical:

(a) This General Permit as well as the Certificate of Coverage, after it is received.

(b) Records of inspections made during the previous twelve months. The permittee shall record the required observations on the Inspection Record Form provided by the Division or a similar inspection form that includes all the required elements. Use of electronically-available records in lieu of the required paper copies will be allowed if shown to provide equal access and utility as the hard-copy records.

3. Documentation to be Retained for Three Years

All data used to complete the e-NOI and all inspection records shall be maintained for a period of three years after project completion and made available upon request. [40 CFR 122.41]

PART III
SELF-INSPECTION, RECORDKEEPING AND REPORTING

SECTION C: REPORTING

1. Occurrences that Must be Reported

Permittees shall report the following occurrences:

(a) Visible sediment deposition in a stream or wetland.

(b) Oil spills if:
- They are 25 gallons or more,
- They are less than 25 gallons but cannot be cleaned up within 24 hours,
- They cause sheen on surface waters (regardless of volume), or
- They are within 100 feet of surface waters (regardless of volume).

(c) Releases of hazardous substances in excess of reportable quantities under Section 311 of the Clean Water Act (Ref: 40 CFR 110.3 and 40 CFR 117.3) or Section 102 of CERCLA (Ref: 40 CFR 302.4) or G.S. 143-215.85.

(d) Anticipated bypasses and unanticipated bypasses.

(e) Noncompliance with the conditions of this permit that may endanger health or the environment.

2. Reporting Timeframes and Other Requirements

After a permittee becomes aware of an occurrence that must be reported, he shall contact the appropriate Division regional office within the timeframes and in accordance with the other requirements listed below. Occurrences outside normal business hours may also be reported to the Department's Environmental Emergency Center personnel at (800) 858-0368.

Occurrence	Reporting Timeframes (After Discovery) and Other Requirements
(a) Visible sediment deposition in a stream or wetland	• ***Within 24 hours***, an oral or electronic notification. • ***Within 7 calendar days***, a report that contains a description of the sediment and actions taken to address the cause of the deposition. Division staff may waive the requirement for a written report on a case-by-case basis. • If the stream is named on the NC 303(d) list as impaired for sediment-related causes, the permittee may be required to perform additional monitoring, inspections or apply more stringent practices if staff determine that additional requirements are needed to assure compliance with the federal or state impaired-waters conditions.
(b) Oil spills and release of hazardous substances per Item 1(b)-(c) above	• ***Within 24 hours***, an oral or electronic notification. The notification shall include information about the date, time, nature, volume and location of the spill or release.
(c) Anticipated bypasses [40 CFR 122.41(m)(3)]	• ***A report at least ten days before the date of the bypass, if possible***. The report shall include an evaluation of the anticipated quality and effect of the bypass.
(d) Unanticipated bypasses [40 CFR 122.41(m)(3)]	• ***Within 24 hours***, an oral or electronic notification. • ***Within 7 calendar days,*** a report that includes an evaluation of the quality and effect of the bypass.
(e) Noncompliance with the conditions of this permit that may endanger health or the environment[40 CFR 122.41(l)(7)]	• ***Within 24 hours***, an oral or electronic notification. • ***Within 7 calendar days***, a report that contains a description of the noncompliance, and its causes; the period of noncompliance, including exact dates and times, and if the noncompliance has not been corrected, the anticipated time noncompliance is expected to continue; and steps taken or planned to reduce, eliminate, and prevent reoccurrence of the noncompliance. [40 CFR 122.41(l)(6). • Division staff may waive the requirement for a written report on a case-by-case basis.

PART II, SECTION G, ITEM (4)
DRAW DOWN OF SEDIMENT BASINS FOR MAINTENANCE OR CLOSE OUT

Sediment basins and traps that receive runoff from drainage areas of one acre or more shall use outlet structures that withdraw water from the surface when these devices need to be drawn down for maintenance or close out unless this is infeasible. The circumstances in which it is not feasible to withdraw water from the surface shall be rare (for example, times with extended cold weather). Non-surface withdrawals from sediment basins shall be allowed only when all of the following criteria have been met:

(a) The E&SC plan authority has been provided with documentation of the non-surface withdrawal and the specific time periods or conditions in which it will occur. The non-surface withdrawal shall not commence until the E&SC plan authority has approved these items,
(b) The non-surface withdrawal has been reported as an anticipated bypass in accordance with Part III, Section C, Item (2)(c) and (d) of this permit,
(c) Dewatering discharges are treated with controls to minimize discharges of pollutants from stormwater that is removed from the sediment basin. Examples of appropriate controls include properly sited, designed and maintained dewatering tanks, weir tanks, and filtration systems,
(d) Vegetated, upland areas of the sites or a properly designed stone pad is used to the extent feasible at the outlet of the dewatering treatment devices described in Item (c) above,
(e) Velocity dissipation devices such as check dams, sediment traps, and riprap are provided at the discharge points of all dewatering devices, and
(f) Sediment removed from the dewatering treatment devices described in Item (c) above is disposed of in a manner that does not cause deposition of sediment into waters of the United States.

NCG01 SELF-INSPECTION, RECORDKEEPING AND REPORTING

EFFECTIVE: 04/01/19

GROUND STABILIZATION AND MATERIALS HANDLING PRACTICES FOR COMPLIANCE WITH THE NCG01 CONSTRUCTION GENERAL PERMIT

Implementing the details and specifications on this plan sheet will result in the construction activity being considered compliant with the Ground Stabilization and Materials Handling sections of the NCG01 Construction General Permit (Sections E and F, respectively). The permittee shall comply with the Erosion and Sediment Control plan approved by the delegated authority having jurisdiction. All details and specifications shown on this sheet may not apply depending on site conditions and the delegated authority having jurisdiction.

SECTION E: GROUND STABILIZATION

Required Ground Stabilization Timeframes

Site Area Description	Stabilize within this many calendar days after ceasing land disturbance	Timeframe variations
(a) Perimeter dikes, swales, ditches, and perimeter slopes	7	None
(b) High Quality Water (HQW) Zones	7	None
(c) Slopes steeper than 3:1	7	If slopes are 10' or less in length and are not steeper than 2:1, 14 days are allowed
(d) Slopes 3:1 to 4:1	14	-7 days for slopes greater than 50' in length and with slopes steeper than 4:1 -7 days for perimeter dikes, swales, ditches, perimeter slopes and HQW Zones -10 days for Falls Lake Watershed
(e) Areas with slopes flatter than 4:1	14	-7 days for perimeter dikes, swales, ditches, perimeter slopes and HQW Zones -10 days for Falls Lake Watershed unless there is zero slope

Note: After the permanent cessation of construction activities, any areas with temporary ground stabilization shall be converted to permanent ground stabilization as soon as practicable but in no case longer than 90 calendar days after the last land disturbing activity. Temporary ground stabilization shall be maintained in a manner to render the surface stable against accelerated erosion until permanent ground stabilization is achieved.

GROUND STABILIZATION SPECIFICATION

Stabilize the ground sufficiently so that rain will not dislodge the soil. Use one of the techniques in the table below:

Temporary Stabilization	Permanent Stabilization
• Temporary grass seed covered with straw or other mulches and tackifiers • Hydroseeding • Rolled erosion control products with or without temporary grass seed • Appropriately applied straw or other mulch • Plastic sheeting	• Permanent grass seed covered with straw or other mulches and tackifiers • Geotextile fabrics such as permanent soil reinforcement matting • Hydroseeding • Shrubs or other permanent plantings covered with mulch • Uniform and evenly distributed ground cover sufficient to restrain erosion • Structural methods such as concrete, asphalt or retaining walls • Rolled erosion control products with grass seed

POLYACRYLAMIDES (PAMS) AND FLOCCULANTS

1. Select flocculants that are appropriate for the soils being exposed during construction, selecting from the *NC DWR List of Approved PAMS/Flocculants*.
2. Apply flocculants at or before the inlets to Erosion and Sediment Control Measures.
3. Apply flocculants at the concentrations specified in the *NC DWR List of Approved PAMS/Flocculants* and in accordance with the manufacturer's instructions.
4. Provide ponding area for containment of treated Stormwater before discharging offsite.
5. Store flocculants in leak-proof containers that are kept under storm-resistant cover or surrounded by secondary containment structures.

EQUIPMENT AND VEHICLE MAINTENANCE

1. Maintain vehicles and equipment to prevent discharge of fluids.
2. Provide drip pans under any stored equipment.
3. Identify leaks and repair as soon as feasible, or remove leaking equipment from the project.
4. Collect all spent fluids, store in separate containers and properly dispose as hazardous waste (recycle when possible).
5. Remove leaking vehicles and construction equipment from service until the problem has been corrected.
6. Bring used fuels, lubricants, coolants, hydraulic fluids and other petroleum products to a recycling or disposal center that handles these materials.

LITTER, BUILDING MATERIAL AND LAND CLEARING WASTE

1. Never bury or burn waste. Place litter and debris in approved waste containers.
2. Provide a sufficient number and size of waste containers (e.g dumpster, trash receptacle) on site to contain construction and domestic wastes.
3. Locate waste containers at least 50 feet away from storm drain inlets and surface waters unless no other alternatives are reasonably available.
4. Locate waste containers on areas that do not receive substantial amounts of runoff from upland areas and does not drain directly to a storm drain, stream or wetland.
5. Cover waste containers at the end of each workday and before storm events or provide secondary containment. Repair or replace damaged waste containers.
6. Anchor all lightweight items in waste containers during times of high winds.
7. Empty waste containers as needed to prevent overflow. Clean up immediately if containers overflow.
8. Dispose waste off-site at an approved disposal facility.
9. On business days, clean up and dispose of waste in designated waste containers.

PAINT AND OTHER LIQUID WASTE

1. Do not dump paint and other liquid waste into storm drains, streams or wetlands.
2. Locate paint washouts at least 50 feet away from storm drain inlets and surface waters unless no other alternatives are reasonably available.
3. Contain liquid wastes in a controlled area.
4. Containment must be labeled, sized and placed appropriately for the needs of site.
5. Prevent the discharge of soaps, solvents, detergents and other liquid wastes from construction sites.

PORTABLE TOILETS

1. Install portable toilets on level ground, at least 50 feet away from storm drains, streams or wetlands unless there is no alternative reasonably available. If 50 foot offset is not attainable, provide relocation of portable toilet behind silt fence or place on a gravel pad and surround with sand bags.
2. Provide staking or anchoring of portable toilets during periods of high winds or in high foot traffic areas.
3. Monitor portable toilets for leaking and properly dispose of any leaked material. Utilize a licensed sanitary waste hauler to remove leaking portable toilets and replace with properly operating unit.

EARTHEN STOCKPILE MANAGEMENT

1. Show stockpile locations on plans. Locate earthen-material stockpile areas at least 50 feet away from storm drain inlets, sediment basins, perimeter sediment controls and surface waters unless it can be shown no other alternatives are reasonably available.
2. Protect stockpile with silt fence installed along toe of slope with a minimum offset of five feet from the toe of stockpile.
3. Provide stable stone access point when feasible.
4. Stabilize stockpile within the timeframes provided on this sheet and in accordance with the approved plan and any additional requirements. Soil stabilization is defined as vegetative, physical or chemical coverage techniques that will restrain accelerated erosion on disturbed soils for temporary or permanent control needs.

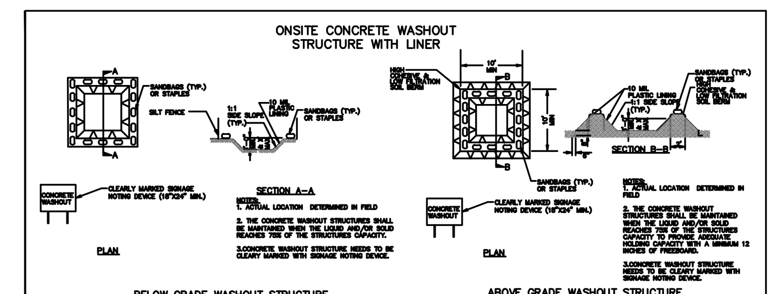

CONCRETE WASHOUTS

1. Do not discharge concrete or cement slurry from the site.
2. Dispose of, or recycle settled, hardened concrete residue in accordance with local and state solid waste regulations and at an approved facility.
3. Manage washout from mortar mixers in accordance with the above item and in addition place the mixer and associated materials on impervious barrier and within lot perimeter silt fence.
4. Install temporary concrete washouts per local requirements, where applicable. If an alternate method or product is to be used, contact your approval authority for review and approval. If local standard details are not available, use one of the two types of temporary concrete washouts provided on this detail.
5. Do not use concrete washouts for dewatering or storing defective curb or sidewalk sections. Stormwater accumulated within the washout may not be pumped into or discharged to the storm drain system or receiving surface waters. Liquid waste must be pumped out and removed from project.
6. Locate washouts at least 50 feet from storm drain inlets and surface waters unless it can be shown that no other alternatives are reasonably available. At a minimum, install protection of storm drain inlet(s) closest to the washout which could receive spills or overflow.
7. Locate washouts in an easily accessible area, on level ground and install a stone entrance pad in front of the washout. Additional controls may be required by the approving authority.
8. Install at least one sign directing concrete trucks to the washout within the project limits. Post signage on the washout itself to identify this location.
9. Remove leavings from the washout when at approximately 75% capacity to limit overflow events. Replace the tarp, sand bags or other temporary structural components when no longer functional. When utilizing alternative or proprietary products, follow manufacturer's instructions.
10. At the completion of the concrete work, remove remaining leavings and dispose of in an approved disposal facility. Fill pit, if applicable, and stabilize any disturbance caused by removal of washout.

HERBICIDES, PESTICIDES AND RODENTICIDES

1. Store and apply herbicides, pesticides and rodenticides in accordance with label restrictions.
2. Store herbicides, pesticides and rodenticides in their original containers with the label, which lists directions for use, ingredients and first aid steps in case of accidental poisoning.
3. Do not store herbicides, pesticides and rodenticides in areas where flooding is possible or where they may spill or leak into wells, stormwater drains, ground water or surface water. If a spill occurs, clean area immediately.
4. Do not stockpile these materials onsite.

HAZARDOUS AND TOXIC WASTE

1. Create designated hazardous waste collection areas on-site.
2. Place hazardous waste containers under cover or in secondary containment.
3. Do not store hazardous chemicals, drums or bagged materials directly on the ground.

NCG01 GROUND STABILIZATION AND MATERIALS HANDLING

EFFECTIVE: 04/01/19

PERMANENT SEEDING SCHEDULE

FOR SHOULDERS, SIDE DITHCES, SLOPES (3:1 MAX)

Date	Type	Planting Rate
Aug 15–Nov 1	Tall Fescue	300 lbs/acre
Nov 1–Mar 1	Tall Fescue & Abruzzi Rye	300 lbs/acre
Mar 1–Apr 15	Tall Fescue	300 lbs/acre
Apr 15–Jun 30	Hulled Common Bermudagrass	25 lbs/acre
Jul 1–Aug 15	Tall Fescue AND Browntop Millet or Sorghum-Sudan Hybrids***	125 lbs/acre (Tall Fescue); 35 lbs/acre (Browntop Millet); 30 lbs/acre (Sorghum-Sudan Hybrids)

FOR SHOULDERS, SIDE DITCHES, SLOPES (3:1 TO 2:1)

Date	Type	Planting Rate
Mar 1–Jun 1	Sericea Lespedeza (scarified) and use the following combinations:	50 lbs/acre (Sericea Lespedeza);
Mar 1–Apr 15	Add Tall Fescue	120 lbs/acre
Mar 1–Jun 30	Or add Weeping Love grass	10 lbs/acre
Mar 1–Jun 30	Or add Hulled Common Bermudagrass	25 lbs/acre
Jun 1–Sept 1	Tall Fescue AND Browntop Mullet or Sorghum-Sudan Hybrids***	120 lbs/acre (Tall Fescue); 35 lbs/acre (Browntop Mullet); 30 lbs/acre (Sorghum-Sudan Hybrids)
Sept 1–Mar 1	Sericea Lespedeza (unhulled – unscarified) AND Tall Fescue	70 lbs/acre (Sericea Lespedeza); 120 lbs/acre (Tall Fescue)
Nov 1–Mar 1	AND Abruzzi Rye	25 lbs/acre

*** **TEMPORARY**: Reseed according to optimum season for desired permanent vegetation. Do not allow temporary cover to grow more than 12" in height before mowing; otherwise, fescue may be shaded out.

MIXTURE:

Agricultural Limestone	2 tons/acre (3 tons/acre in clay soils)
Fertilizer	1,000 lbs/acre – 10-10-10
Superphosphate	500 lbs/acre – 20% analysis
Mulch	2 tons/acre – small grain straw
Anchor	Asphalt emulsion at 400 gals/acre

MAINTENANCE:
REFERTILIZE THE FOLLOWING APRIL WITH 50 LB/ACRE NITROGEN. REPEAT AS GROWTH REQUIRES. MAY BE MOWED AS OFTEN AS NEEDED.

NOTE: SEE NCDOT'S LATEST STANDARDS FOR STABILIZATION FOR MORE INFORMATION.

PERMANENT SEEDBED PREPARATION

1. CHISEL COMPACTED AREAS AND SPREAD TOPSOIL THREE INCHES DEEP OVER ADVERSE SOIL CONDITIONS, IF AVAILABLE.
2. RIP THE ENTIRE AREA TO SIX INCHES DEEP.
3. REMOVE ALL LOOSE ROCK, ROOTS AND OTHER OBSTRUCTIONS, LEAVING SURFACE REASONABLY SMOOTH AND UNIFORM.
4. APPLY AGRICULTURAL LIME, FERTILIZER AND SUPERPHOSPHATE UNIFORMLY AND MIX WITH SOIL (SEE MIXTURE BELOW).
5. CONTINUE TILLAGE UNTIL A WELL-PULVERIZED, FIRM, REASONABLY UNIFORM SEEDBED IS PREPARED FOUR TO SIX INCHES DEEP.
6. SEED ON A FRESHLY PREPARED SEEDBED AND COVER SEED LIGHTLY WITH SEEDING EQUIPMENT OR CULTIPACK AFTER SEEDING.
7. MULCH IMMEDIATELY AFTER SEEDING AND ANCHOR MULCH.
8. INSPECT ALL SEEDED AREAS AND MAKE NECESSARY REPAIRS OR RESEEDINGS WITHIN THE PLANTING SEASON, IF POSSIBLE. IF STAND SHOULD BE MORE THAN 60% DAMAGED, RE-ESTABLISH FOLLOWING THE ORIGINAL LIME, FERTILIZER AND SEEDING RATES.
9. CONSULT S&EC ENVIRONMENTAL ENGINEERS ON MAINTENANCE TREATMENT AND FERTILIZATION AFTER PERMANENT COVER IS ESTABLISHED.

Temporary seeding recommendations for late Winter/Early Spring

Seeding Mixture

Species	Rate (Lb/acre)
Rye Grain (green)	120
Annual lespedeza (Kobe in Piedmont and Costal Plain)	50

Omit annual lespedeza when duration of temporary cover is not to extend beyond June.

Seeding dates:
Piedmont and Coastal Plain- January 1 - May 1

Soil Amendments:
Follow recommendations of soil tests or apply 2 tons/acre ground agricultural limestone and 1,000 lb/acre 10-10-10 fertilizer.

Mulch:
Apply 4,000/lb/acre straw. Anchor straw by asphalt tack, netting or a mulch anchoring tool. A disk with blades set nearly straight can be used as a mulching anchoring tool.

Maintenance:
Re-fertilize if growth is not fully adequate. Reseed, re-fertilize and mulch immediately following erosion and other damage.

Temporary seeding recommendations for Summer

Seeding Mixture

Species	Rate (Lb/acre)
German millet	40

Seeding dates:
Piedmont- May 1 -Aug 15
Coastal Plain- April 15- Aug 31

Soil Amendments:
Follow recommendations of soil tests or apply 2 tons/acre ground agricultural limestone and 1,000 lb/acre 10-10-10 fertilizer.

Mulch:
Apply 4,000/lb/acre straw. Anchor straw by asphalt tack, netting or a mulch anchoring tool. A disk with blades set nearly straight can be used as a mulching anchoring tool.

Maintenance:
Re-fertilize if growth is not fully adequate. Reseed, re-fertilize and mulch immediately following erosion and other damage.

Temporary seeding recommendations for Fall

Seeding Mixture

Species	Rate (Lb/acre)
Rye Grain	120

Seeding dates:
Piedmont- Aug 15 - Dec 31
Coastal Plain- Aug 31 - Dec 31

Soil Amendments:
Follow recommendations of soil tests or apply 2 tons/acre ground agricultural limestone and 1,000 lb/acre 10-10-10 fertilizer.

Mulch:
Apply 4,000/lb/acre straw. Anchor straw by asphalt tack, netting or a mulch anchoring tool. A disk with blades set nearly straight can be used as a mulching anchoring tool.

Maintenance:
Repair and maintain damaged areas immediately. Topdress with 50 lb/acre of nitrogen in March. If it is necessary to extend temporary cover beyond June 15, overseed with 50 lb/acre Kobe (Piedmont and Costal Plain) in late February or early March.

NORTH CAROLINA PROFESSIONAL SEAL 20234 ENGINEER THOMAS S. SPEIGHT, JR.

Bateman Civil Survey Company
Engineers • Surveyors • Planners
2524 Reliance Avenue, Apex, North Carolina 27539
Phone: 919.577.1080 Fax: 919.577.1081
NCBELS FIRM No. C-2378

CHANDLER'S RIDGE
CONSTRUCTION DOCUMENTS
CONSERVATION SUBDIVISION
410 W. YOUNG ST.
ROLESVILLE, NC
WAKE COUNTY

EROSION CONTROL DETAILS

Project Engineer:	TSS
Designed By:	TEP
Drawn By:	TEP
Checked By:	TSS
Scale:	
Date:	06/17/2020
Project Number:	P170347

SHEET
C922

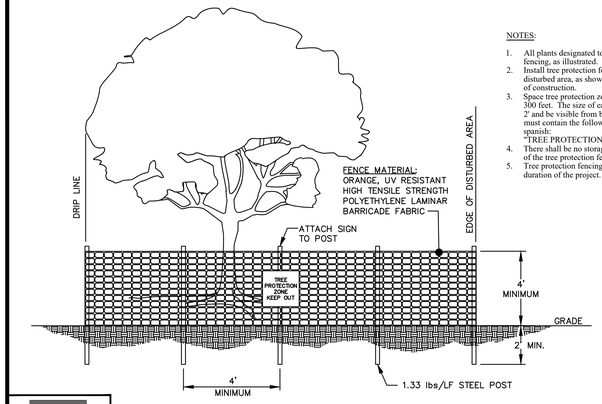

NOTES:

1. All plants designated to be saved shall be protected by fencing, as illustrated.
2. Install tree protection fence at tree drip line or at edge of disturbed area, as shown on plans, prior to commencement of construction.
3. Space tree protection zone signs a minimum of one every 300 feet. The size of each sign must be a minimum of 2' x 2' and be visible from both sides of the fence. The sign must contain the following language in both english & spanish:
   "TREE PROTECTION ZONE, KEEP OUT".
4. There shall be no storage of material within the boundaries of the tree protection fencing.
5. Tree protection fencing shall be maintained throughout the duration of the project.

WAKE COUNTY NORTH CAROLINA

EFFECTIVE: 4/15/19

STANDARD TREE PROTECTION FENCE DETAIL

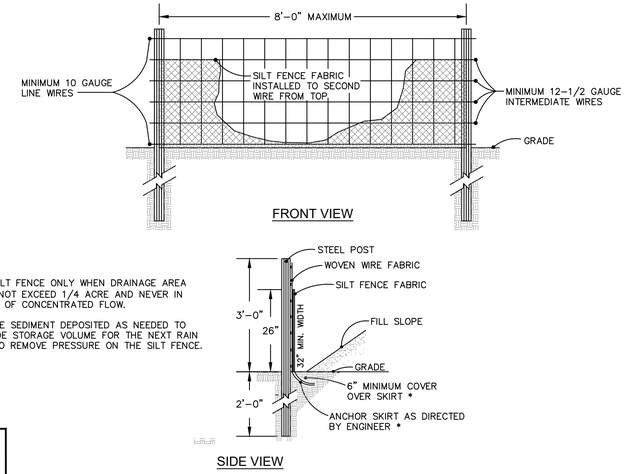

NOTE:

1. USE SILT FENCE ONLY WHEN DRAINAGE AREA DOES NOT EXCEED 1/4 ACRE AND NEVER IN AREAS OF CONCENTRATED FLOW.
2. REMOVE SEDIMENT DEPOSITED AS NEEDED TO PROVIDE STORAGE VOLUME FOR THE NEXT RAIN AND TO REMOVE PRESSURE ON THE SILT FENCE.

WAKE COUNTY NORTH CAROLINA

EFFECTIVE: 01/31/08

STANDARD TEMPORARY SILT FENCE

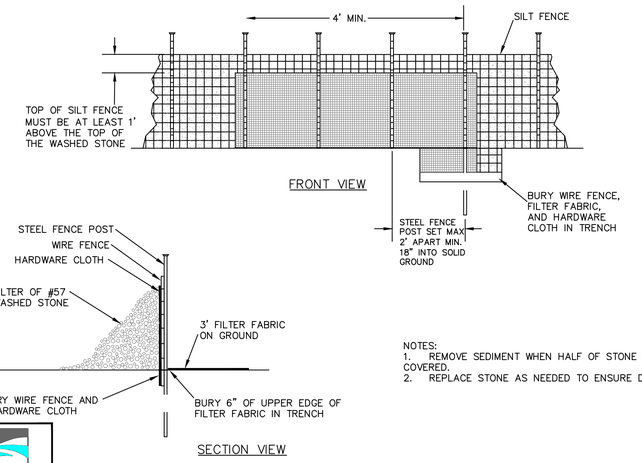

NOTES:

1. REMOVE SEDIMENT WHEN HALF OF STONE OUTLET IS COVERED.
2. REPLACE STONE AS NEEDED TO ENSURE DEWATERING.

WAKE COUNTY NORTH CAROLINA

EFFECTIVE: 01/31/08

STANDARD SILT FENCE OUTLET

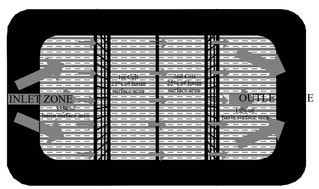

NOTES:

1. BAFFLE MATERIAL SHOULD BE SECURED AT THE BOTTOM AND SIDES USING STAPLES OR BY TRENCHING AS FOR SILT FENCE.
2. MOST OF THE SEDIMENT WILL ACCUMULATE IN THE 1ST BAY, WHICH SHOULD BE READILY ACCESSIBLE FOR MAINTENANCE.
3. PROVIDE 3 BAFFLES (USE TWO IF LESS THAN 20 FEET IN LENGTH). PROVIDE 5 BAFFLES FOR DRAINAGE AREAS GREATER THAN 10 ACRES.
4. BAFFLE SHALL BE 700 G/M2 COIR EROSION BLANKET.
5. TOPS OF BAFFLES SHOULD BE 2 INCHES LOWER THAN THE TOP OF THE BERMS
6. INSPECT BAFFLES FOR REPAIR ONCE A WEEK AND AFTER EACH RAINFALL

PLAN VIEW

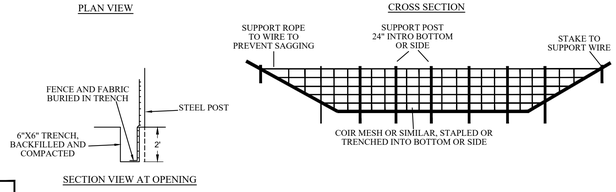

WAKE COUNTY NORTH CAROLINA

EFFECTIVE: 01/31/08

STANDARD BAFFLES DETAIL

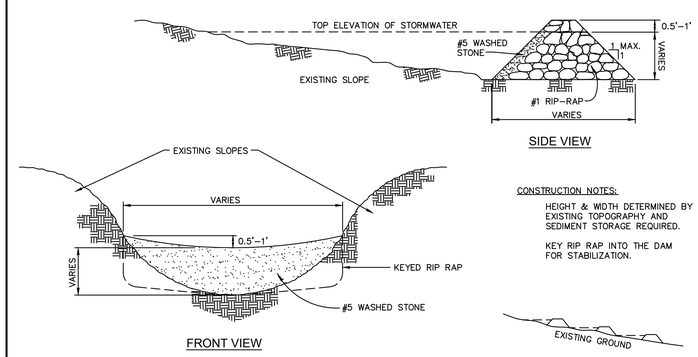

CONSTRUCTION NOTES:

HEIGHT & WIDTH DETERMINED BY EXISTING TOPOGRAPHY AND SEDIMENT STORAGE REQUIRED.

KEY RIP RAP INTO THE DAM FOR STABILIZATION.

NOTE: REMOVE SEDIMENT ACCUMULATION FROM BEHIND CHECK DAMS TO PREVENT DAMAGE TO CHANNEL VEGETATION. FLOW SHOULD BE MAINTAINED THROUGH THE DAM.

WAKE COUNTY NORTH CAROLINA

EFFECTIVE: 01/31/08

STANDARD CHECK DAM

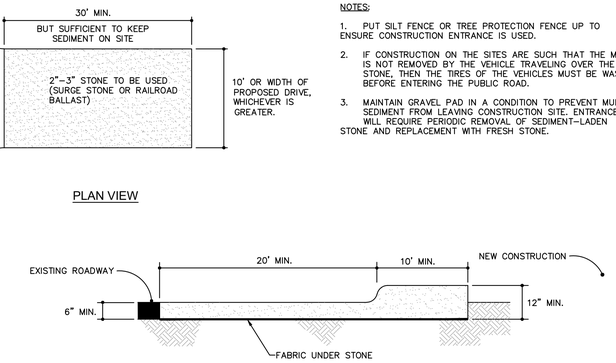

NOTES:

1. PUT SILT FENCE OR TREE PROTECTION FENCE UP TO ENSURE CONSTRUCTION ENTRANCE IS USED.
2. IF CONSTRUCTION ON THE SITES ARE SUCH THAT THE MUD IS NOT REMOVED BY THE VEHICLE TRAVELING OVER THE STONE, THEN THE TIRES OF THE VEHICLES MUST BE WASHED BEFORE ENTERING THE PUBLIC ROAD.
3. MAINTAIN GRAVEL PAD IN A CONDITION TO PREVENT MUD OR SEDIMENT FROM LEAVING CONSTRUCTION SITE. ENTRANCE WILL REQUIRE PERIODIC REMOVAL OF SEDIMENT-LADEN STONE AND REPLACEMENT WITH FRESH STONE.

WAKE COUNTY NORTH CAROLINA

EFFECTIVE: 01/31/08

STANDARD CONSTRUCTION ENTRANCE

NOTES:

1. DIVERSION TO BE USED UPSLOPE OF A CONSTRUCTION SITE TO PREVENT STORM RUNOFF FROM ENTERING THE DISTURBED AREA.
2. IMMEDIATELY LINE AND STABILIZE BEFORE ANY DOWNSLOPE GRADING BEGINS (STABILIZATION MUST OCCUR BEFORE ISSUANCE OF A CERTIFICATE OF COMPLIANCE). STABILIZATION METHOD IS BASED ON VELOCITY OF OFFSITE DRAINAGE.
3. DIVERSIONS SHOULD ONLY BE USED FOR DRAINAGES 5 ACRES OR LESS.
4. ANY SEDIMENT LADEN WATER PRIOR TO STABILIZATION OF THE DIVERSION MUST BE DIVERTED INTO AN APPROVED EROSION AND SEDIMENT CONTROL BMP. CLEAN WATER SHOULD EMPTY INTO AN APPROVED OUTLET DEVICE.

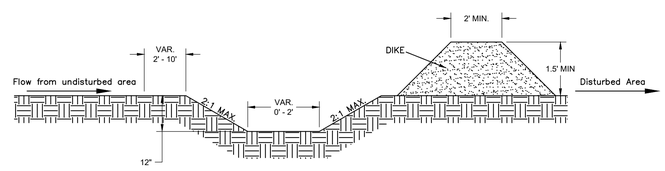

CROSS SECTIONAL VIEW

WAKE COUNTY NORTH CAROLINA

EFFECTIVE: 01/31/08

STANDARD CLEAN WATER DIVERSION

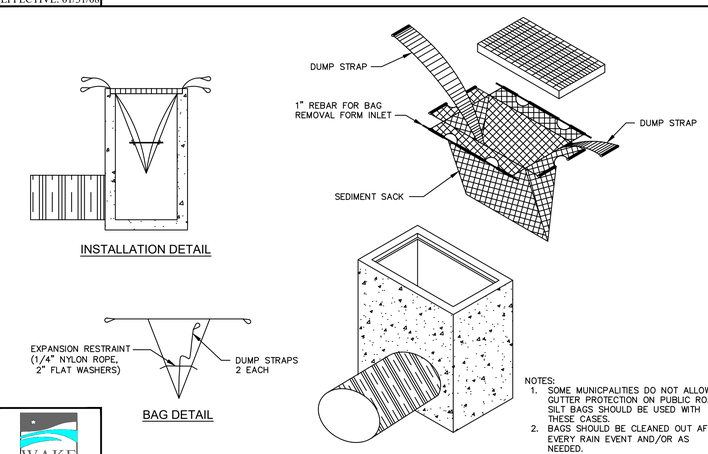

NOTES:

1. SOME MUNICPALITIES DO NOT ALLOW GUTTER PROTECTION ON PUBLIC ROADS. SILT BAGS SHOULD BE USED WITH THESE CASES.
2. BAGS SHOULD BE CLEANED OUT AFTER EVERY RAIN EVENT AND/OR AS NEEDED.

WAKE COUNTY NORTH CAROLINA

EFFECTIVE: 01/31/08

STANDARD SILT BAG - INLET SEDIMENT CONTROL DEVICE

REV	DESCRIPTION	DATE
03	CONSTRUCTION DOCUMENTS 3rd SUBMITTAL	06/17/2020
02	CONSTRUCTION DOCUMENTS 2nd SUBMITTAL	04/15/2020
01	CONSTRUCTION DOCUMENTS 1st SUBMITTAL	01/13/2020

REVISIONS

P:\2017 Projects\170347 Chandlers Ridge\Eng\CAD\DWG\TP SHEET\P_170347_C920_EC_DETAILS.dwg

NORTH CAROLINA PROFESSIONAL SEAL 20234 ENGINEER THOMAS S. SPOCHT, JR.

Bateman Civil Survey Company
Engineers • Surveyors • Planners
2524 Reliance Avenue, Apex, North Carolina 27539
Phone: 919.577.1080 Fax: 919.577.1081
NCBELS FIRM No. C-2378

CHANDLER'S RIDGE
CONSTRUCTION DOCUMENTS
CONSERVATION SUBDIVISION
410 W. YOUNG ST.
ROLESVILLE, NC
WAKE COUNTY

EROSION CONTROL
DETAILS

Project Engineer:	TSS
Designed By:	TEP
Drawn By:	TEP
Checked By:	TSS
Scale:	
Date:	06/17/2020
Project Number:	P170347

SHEET

C923

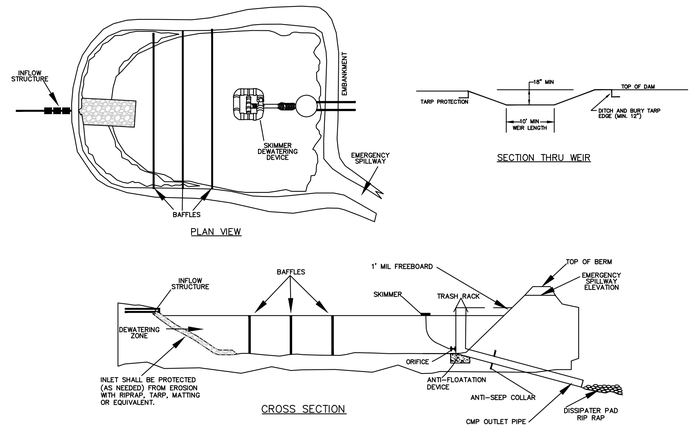

NOTES:
1) BASIN SHOULD BE CLEANED OUT WHEN CAPACITY REACHES AN ELEVATION REPRESENTING THAT THE BASIN IS HALF-FULL.
2) THE TARP USED TO PROTECT THE WEIR SHALL BE THE WIDTH SPECIFIED. THE LENGTH OF THE TARP SHALL BE ACCORDING TO AVAILABLE SUPPLY. IF MULTIPLE TARPS ARE TO BE USED, THEN TARPS SHALL BE OVERLAPPED AT LEAST 12". THE UPSTREAM 12" TARP SHALL OVERLAP THE DOWNSTREAM TARP. THE TARP SHALL BE 50 MIL. HEAVY DUTY SILVER TARPAULINS OR EQUIVALENT FOR U.V. RESISTANCE.
3) PROVIDE A MINIMUM OF THREE POROUS BAFFLES TO EVENLY DISTRIBUTE FLOW ACROSS THE BASIN, REDUCING TURBULENCE.
4) BAFFLE MATERIAL MUST BE SECURED AT THE BOTTOM AND SIDES USING STAPLES OR BY TRENCHING AS FOR A SILT FENCE.
5) MOST OF THE SEDIMENT WILL ACCUMULATE IN THE FIRST BAY, SO THIS SHOULD BE READILY AVAILABLE FOR MAINTENANCE.
6) DURING THE CONSTRUCTION PHASE OF THE PROJECT, PERMANENT STORMWATER RISER SHALL ONLY DEWATER FROM THE TOP OF PIPE.
7) POND SHALL NOT BE CONVERTED FOR STORMWATER USE UNTIL APPROVED BY ENVIRONMENTAL ENGINEER.

WAKE COUNTY NORTH CAROLINA

EFFECTIVE: 01/31/08

STANDARD SKIMMER ATTACHED TO PERMANENT RISER

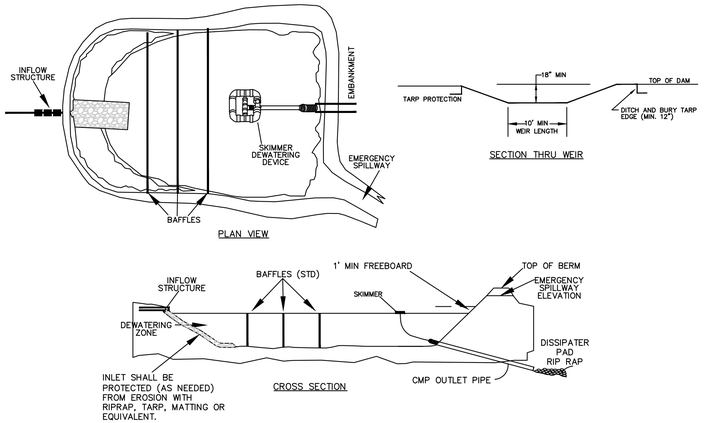

NOTES:
1) BASIN SHOULD BE CLEANED OUT WHEN CAPACITY REACHES AN ELEVATION REPRESENTING THAT THE BASIN IS HALF-FULL.
2) THE TARP USED TO PROTECT THE WEIR SHALL BE THE WIDTH SPECIFIED. THE LENGTH OF THE TARP SHALL BE ACCORDING TO AVAILABLE SUPPLY. IF MULTIPLE TARPS ARE TO BE USED, THEN TARPS SHALL BE OVERLAPPED AT LEAST 12". THE UPSTREAM 12" TARP SHALL OVERLAP THE DOWNSTREAM TARP. THE TARP SHALL BE 50 MIL. HEAVY DUTY SILVER TARPAULINS OR EQUIVALENT FOR U.V. RESISTANCE.
3) PROVIDE A MINIMUM OF THREE POROUS BAFFLES TO EVENLY DISTRIBUTE FLOW ACROSS THE BASIN, REDUCING TURBULENCE.
4) BAFFLE MATERIAL MUST BE SECURED AT THE BOTTOM AND SIDES USING STAPLES OR BY TRENCHING AS FOR A SILT FENCE.
5) MOST OF THE SEDIMENT WILL ACCUMULATE IN THE FIRST BAY, SO THIS SHOULD BE READILY AVAILABLE FOR MAINTENANCE.
6) DURING THE CONSTRUCTION PHASE OF THE PROJECT, PERMANENT STORMWATER RISER SHALL ONLY DEWATER FROM THE TOP OF PIPE.
7) POND SHALL NOT BE CONVERTED FOR STORMWATER USE UNTIL APPROVED BY ENVIRONMENTAL ENGINEER.

WAKE COUNTY NORTH CAROLINA

EFFECTIVE: 01/31/08

STANDARD SKIMMER BASIN

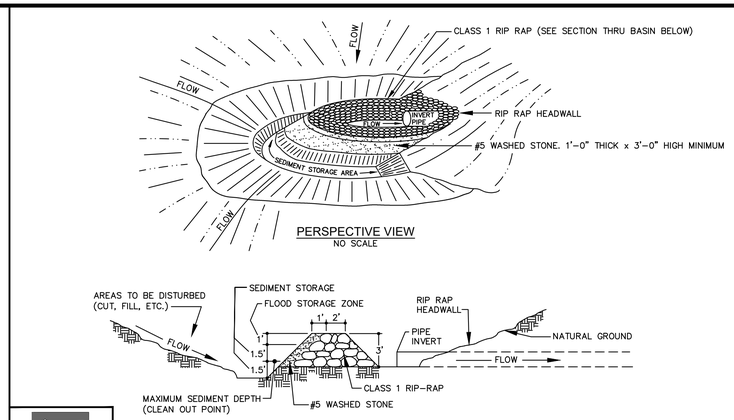

WAKE COUNTY NORTH CAROLINA

EFFECTIVE: 01/31/08

STANDARD HORSESHOE INLET PROTECTION

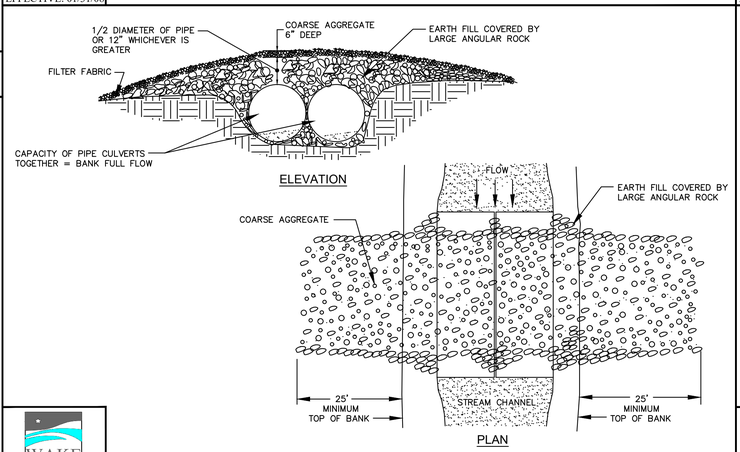

WAKE COUNTY NORTH CAROLINA

EFFECTIVE: 01/31/08

STANDARD TEMPORARY STREAM CROSSING

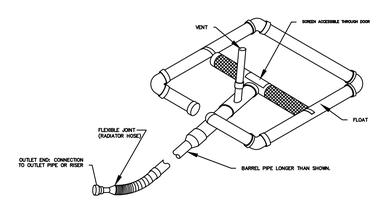

WAKE COUNTY NORTH CAROLINA

EFFECTIVE: 01/31/08

STANDARD SKIMMER DETAIL

NOTES:

1. TEMPORARY DIVERSION DITCH TO BE USED TO INTERCEPT FLOW AND/OR DIVERT TO A SEDIMENT CONTROL MEASURE OR BMP.
2. SILT SHALL BE REMOVED WHEN DITCH IS ONE-HALF FULL.
3. DITCH SHALL BE RECONSTRUCTED WHEN DAMAGED BY EQUIPMENT OR COVERED BY FILL.
4. STABILIZE DIVERSION DITCH BERM WITH TEMPORARY SEEDING, MULCH WITH TAC, AND/OR EROSION CONTROL NETTING.

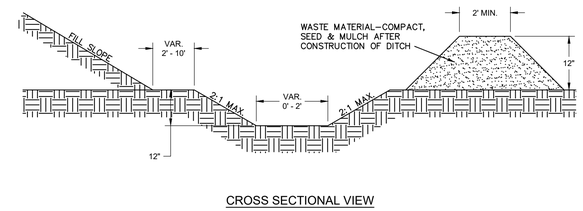

WAKE COUNTY NORTH CAROLINA

EFFECTIVE: 01/31/08

STANDARD TEMPORARY DIVERSION DITCH

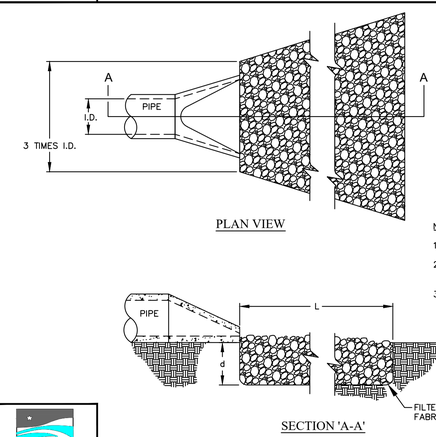

NOTES:

1. L = THE LENGTH OF THE RIPRAP APRON.
2. d = 1.5 TIMES THE MAXIMUM STONE DIAMETER BUT NOT LESS THAN 6" (INCHES).
3. A FILTER BLANKET OR FILTER FABRIC SHOULD BE INSTALLED BETWEEN THE RIPRAP AND SOIL FOUNDATION.

WAKE COUNTY NORTH CAROLINA

EFFECTIVE: 01/31/08

STANDARD PIPE OUTLET TO FLAT AREA NO WELL-DEFINED CHANNEL

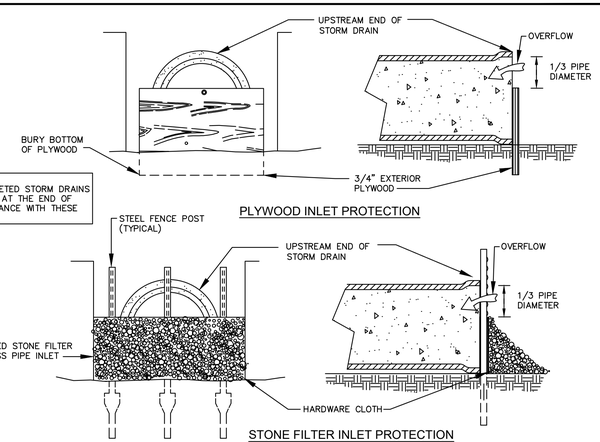

NOTE:
ALL PARTIALLY COMPLETED STORM DRAINS SHALL BE PROTECTED AT THE END OF EACH DAY IN ACCORDANCE WITH THESE DETAILS.

WAKE COUNTY NORTH CAROLINA

EFFECTIVE: 01/31/08

STANDARD PIPE INLET PROTECTION (PLYWOOD & STONE)

REV	DESCRIPTION	DATE
03	CONSTRUCTION DOCUMENTS 3rd SUBMITTAL	06/17/2020
02	CONSTRUCTION DOCUMENTS 2nd SUBMITTAL	04/15/2020
01	CONSTRUCTION DOCUMENTS 1st SUBMITTAL	01/13/2020

REVISIONS

NORTH CAROLINA PROFESSIONAL SEAL 20234 ENGINEER THOMAS S. SPOCHT, JR.

Bateman Civil Survey Company
Engineers • Surveyors • Planners
2524 Reliance Avenue, Apex, North Carolina 27539
Phone: 919.577.1080 Fax: 919.577.1081
NCBELS FIRM No. C-2378

CHANDLER'S RIDGE
CONSTRUCTION DOCUMENTS
CONSERVATION SUBDIVISION

410 W. YOUNG ST.
ROLESVILLE, NC
WAKE COUNTY

EROSION CONTROL DETAILS

Project Engineer:	TSS
Designed By:	TEP
Drawn By:	TEP
Checked By:	TSS
Scale:	
Date:	06/17/2020
Project Number:	P170347

SHEET
C924

P:\2017 Projects\170347 Chandlers Ridge\Eng\CAD\DWG\TP SHEET\P_170347_C920_EC_DETAILS.dwg

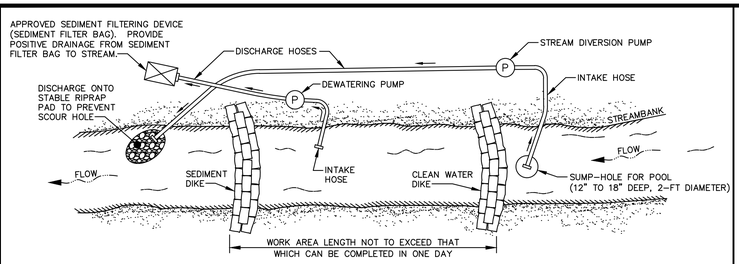

TEMPORARY PUMP AROUND SEQUENCE
1. SET UP PUMP WITH SUCTION AND DISCHARGE HOSE.
2. INSTALL UP-STREAM SANDBAG DAM.
3. INSTALL DOWN-STREAM SANDBAG DAM.
4. THE PUMP MUST RUN CONTINUOUSLY WHILE WORKING IN THE STREAM.
5. STREAMBANKS MUST BE STABILIZED AT THE END OF EACH DAY.

NOTES:
1. SANDBAG DIKES SHALL BE SITUATED AT THE UPSTREAM AND DOWNSTREAM ENDS OF THE WORK AREA, AND STREAM FLOW SHALL BE PUMPED AROUND THE WORK AREA. THE PUMP SHOULD DISCHARGE ONTO A STABLE VELOCITY DISSIPATER CONSTRUCTED OF RIPRAP OR SANDBAGS.
2. WATER FROM THE WORK AREA SHALL BE PUMPED TO A SEDIMENT FILTERING MEASURE SUCH AS A SEDIMENT BAG OR OTHER APPROVED DEVICE. THE MEASURE SHALL BE LOCATED SUCH THAT THE WATER DRAINS BACK INTO THE CHANNEL BELOW THE DOWNSTREAM SANDBAG DIKE WITHOUT CAUSING FURTHER EROSION BETWEEN THE SEDIMENT FILTER BAG AND THE STREAMBANK.

TEMPORARY PUMP AROUND

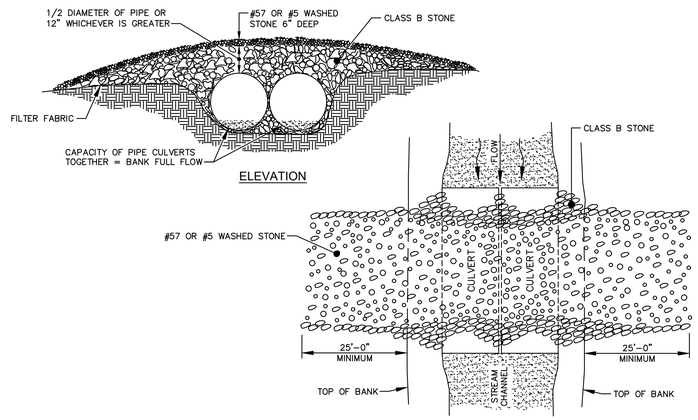

STANDARD TEMPORARY STREAM CROSSING

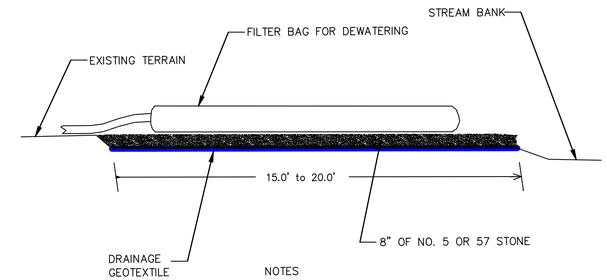

NOTES
PROVIDE STABILIZED OUTLET TO STREAM BANK. WOOD PALLETS MAY BE USED IN LIEU OF STONE AND GEOTEXTILE AS DIRECTED. A SUFFICIENT NUMBER OF PALLETS MUST BE PROVIDED TO ELEVATE THE ENTIRE FILTER BAG FOR DEWATERING ABOVE NATURAL GROUND.

NOT TO SCALE

WAKE COUNTY NORTH CAROLINA
EFFECTIVE: 01/31/08

STANDARD FILTER BAG FOR DEWATERING ACTIVITIES

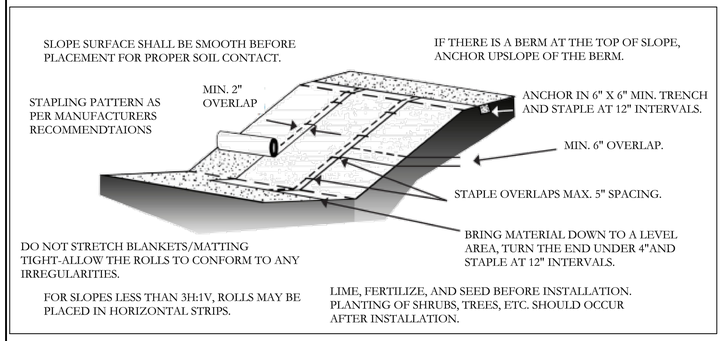

EROSION CONTROL MATTING ON SLOPES

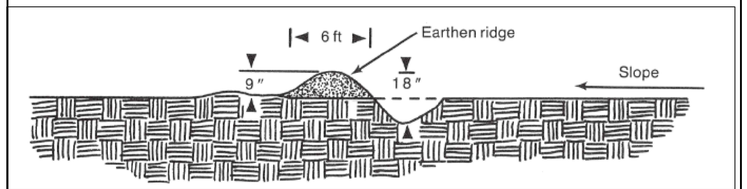

STANDARD WATER BAR

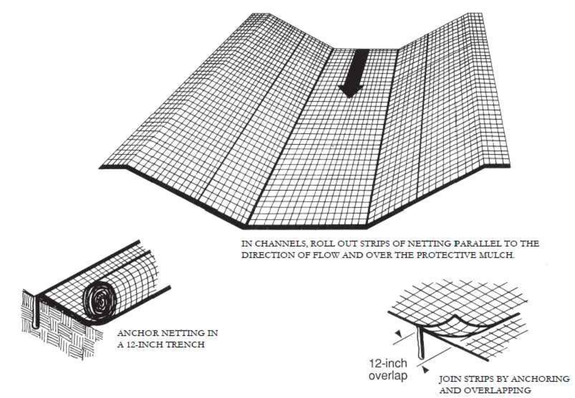

NOT TO SCALE

EROSION CONTROL MATTING IN CHANNEL

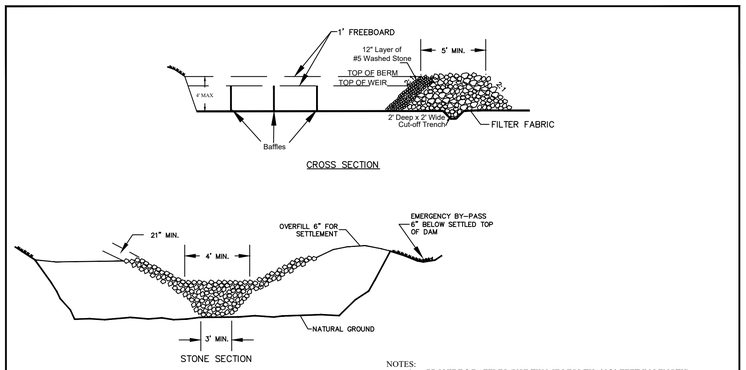

NOTES:
1. PROVIDE 3 BAFFLES (USE TWO IF LESS THAN 20 FEET IN LENGTH).
2. BAFFLE MATERIAL SHOULD BE SECURED AT THE BOTTOM AND SIDES USING STAPLES OR BY TRENCHING AS FOR SILT FENCE.
3. MOST OF THE SEDIMENT WILL ACCUMULATE IN THE 1ST BAY, WHICH SHOULD BE READILY ACCESSIBLE FOR MAINTENANCE.
4. BAFFLE SHALL BE 700 G/M2 COIR EROSION BLANKET.
5. TOPS OF BAFFLES SHOULD BE 2 INCHES LOWER THAN THE TOP OF THE BERMS
6. INSPECT BAFFLES FOR REPAIR ONCE A WEEK AND AFTER EACH RAINFALL.
7. BASIN SHOULD BE CLEANED OUT WHEN CAPACITY REACHES AN ELEVATION REPRESENTING THAT THE BASIN IS HALF-FULL.

WAKE COUNTY NORTH CAROLINA
EFFECTIVE: 01/31/08

STANDARD ROCK DAM SEDIMENT BASIN (SEDIMENT TRAP)

REV	DESCRIPTION	DATE
03	CONSTRUCTION DOCUMENTS 3rd SUBMITTAL	06/17/2020
02	CONSTRUCTION DOCUMENTS 2nd SUBMITTAL	04/15/2020
01	CONSTRUCTION DOCUMENTS 1st SUBMITTAL	01/13/2020

REVISIONS

P:\2017 Projects\170347 Chandlers Ridge\Eng\CAD\DWG\TP SHEET\P_170347_C920_EC_DETAILS.dwg

NORTH CAROLINA PROFESSIONAL SEAL 20234 ENGINEER THOMAS S. SPOONTS, JR.

Bateman Civil Survey Company
Engineers • Surveyors • Planners
2524 Reliance Avenue, Apex, North Carolina 27539
Phone: 919.577.1080 Fax: 919.577.1081
NCBELS FIRM No. C-2378

CHANDLER'S RIDGE
CONSTRUCTION DOCUMENTS
CONSERVATION SUBDIVISION
410 W. YOUNG ST.
ROLESVILLE, NC
WAKE COUNTY

EROSION CONTROL DETAILS

Project Engineer:	TSS
Designed By:	TEP
Drawn By:	TEP
Checked By:	TSS
Scale:	
Date:	06/17/2020
Project Number:	P170347

SHEET
C925