ALL CONSTRUCTION SHALL BE IN ACCORDANCE WITH CURRENT TOWN OF ROLESVILLE STANDARDS AND SPECIFICATIONS

COBBLESTONE VILLAGE
MIXED USE DEVELOPMENT

TOWN OF ROLESVILLE, WAKE COUNTY, NORTH CAROLINA

CONSTRUCTION DRAWINGS
TOWN OF ROLESVILLE PROJECT NO.
SITE PLAN APPLICATION NO. CUP-SB-21-01

SYMBOLS AND ABBREVIATIONS

ABC	AGGREGATE BASE COURSE
ALUM	ALUMINUM
AST2	ALUMINIZED STEEL – TYPE 2
B–B	BACK TO BACK
BOA	BLOW–OFF ASSEMBLY
C&G	CURB AND GUTTER
CFS	CUBIC FEET PER SECOND
CI	CURB INLET
CL	CENTER LINE
CMP	CORRUGATED METAL PIPE
CO	CLEAN OUT
COM	COMMUNICATION
CONC	CONCRETE
DCV	DOUBLE CHECK VALVE
DDCV	DOUBLE DETECTOR CHECK VALVE
DI	DROP INLET
DIP	DUCTILE IRON PIPE
EASE	EASEMENT
ELEC	ELECTRIC
EX	EXISTING
FES	FLARED END SECTION
FH	FIRE HYDRANT
FM	FORCE MAIN
FT	FEET
FT/SEC	FEET PER SEC
GALV	GALVANIZED
GV	GATE VALVE
HDPE	HIGH DENSITY POLYETHYLENE
L	LENGTH
LF	LINEAR FEET
MH	MANHOLE
PAVE	PAVEMENT
PE	FINISHED PAD ELEVATION
PP	POWER POLE
PVC	POLYVINYL CHLORIDE
R	RADIUS
R/W	RIGHT–OF–WAY
RED	REDUCER
RCP	REINFORCED CONCRETE PIPE
RPZ	REDUCED PRESSURE ZONE
SS	SANITARY SEWER
STA	STATION
TDD	TEMPORARY DIVERSION DITCH
TELE	TELEPHONE
TSB	TEMPORARY SEDIMENT BASIN
UG	UNDERGROUND
WCR	WHEELCHAIR RAMP
W/L	WATER LINE
WM	WATER METER
YI	YARD INLET

EXISTING CURB INLET
EXISTING GRATE INLET/YARD INLET
EXISTING FLARED END SECTION
EXISTING FIRE HYDRANT
EXISTING BLOW–OFF ASSEMBLY
EXISTING GATE VALVE
EXISTING REDUCER
EXISTING WATER METER
EXISTING SAN SEWER MANHOLE
EXISTING CLEAN OUT
EXISTING POWER POLE
EXISTING TELEPHONE PEDESTAL
EXISTING AREA LIGHT
EXISTING SIGN
NEW CURB INLET
NEW GRATE INLET/YARD INLET
NEW FLARED END SECTION
NEW FIRE HYDRANT
NEW BLOW–OFF ASSEMBLY
NEW GATE VALVE
NEW REDUCER
NEW WATER METER
NEW TEE
NEW PLUG
NEW MANHOLE
NEW CLEAN OUT
NEW SIGN
IRON PIPE
BENCHMARK
TEMP SILT FENCE
TEMP TREE PROTECTION FENCE
TEMP COMBINATION SILT/TREE PROTECTION FENCE
TEMP DIVERSION DITCH
DISTURBED LIMITS
STREAM
EXISTING GAS LINE
EXISTING COMMUNICATIONS LINE
EXISTING UNDERGROUND TELEPHONE
EXISTING UNDERGROUND ELECTRIC
EXISTING OVERHEAD ELECTRIC
EXISTING WATER LINE
EXISTING SANITARY SEWER FORCE MAIN
EXISTING SANITARY SEWER
EXISTING STORM DRAINAGE
NEW STORM DRAINAGE
NEW WATER LINE
NEW SANITARY SEWER
NEW SANITARY SEWER FORCE MAIN
NEW GAS MAIN
HANDICAPPED ACCESSIBLE ROUTE

NOTE: ALL CONSTRUCTION ACTIVITY MUST BE IN ACCORDANCE WITH THE ACCEPTED POLICIES OF THE TOWN OF ROLESVILLE AND NCDOT

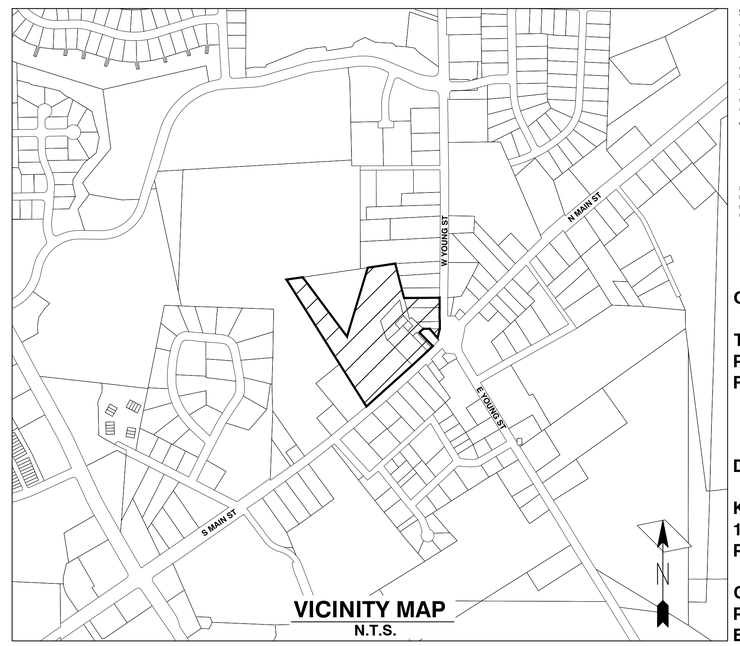

VICINITY MAP
N.T.S.

Public
Water Distribution / Extension System

The City of Raleigh consents to the connection and extension of the City's public water system as shown on this plan. The material and Construction methods used for this project shall conform to the standards and specifications of the City's Public Utilities Handbook.

City of Raleigh Public Utilities Department Permit # W-3879

Authorization to Construct See digital signature

Private
Sewer Collection / Extension System

The City of Raleigh consents to the connection to its public sewer system and extension of the private sewer collection system as shown on this plan. The material and constructions methods used for this project shall conform to the standards and specifications of the City's Public Utilities Handbook.

City of Raleigh Public Utilities Department Permit # S-4962 (P)

Authorization to Construct See digital signature

SITE PERMITTING APPROVAL

Water and Sewer Permits (If applicable)

The City of Raleigh consents to the connection and extension of the City's **Public Sewer System** as shown on this plan. The material and Construction methods used for this project shall conform to the standards and specifications of the City's Public Utilities Handbook. **City of Raleigh Public Utilities Department Permit #** W-3879

The City of Raleigh consents to the connection and extension of the City's **Public Water System** as shown on this plan. The material and Construction methods used for this project shall conform to the standards and specifications of the City's Public Utilities Handbook. **City of Raleigh Public Utilities Department Permit #** S-4962 (P)

The City of Raleigh consents to the connection to its public sewer system and extension of the **private sewer collection** system as shown on this plan. The material and constructions methods used for this project shall conform to the standards and specifications of the City's Public Utilities Handbook.

City of Raleigh Public Utilities Department Permit # _____

CITY OF RALEIGH - PLANS AUTHORIZED FOR CONSTRUCTION

Electronic Approval: This approval is being issued electronically. This approval is valid only upon the signature of a City of Raleigh Review Officer below. The City will retain a copy of the approved plans. Any work authorized by this approval must proceed in accordance with the plans kept on file with the City. This electronic approval may not be edited once issued. Any modification to this approval once issued will invalidate this approval.

City of Raleigh Development Approval _____

Raleigh Water Review Officer

SHEET INDEX

OWNER:

TOWN OF ROLESVILLE
P.O. BOX 250
ROLESVILLE, NC 27571-0250

DEVELOPER:

KDM DEVELOPMENT CORPORATION
1080 PITTSFORD VICTOR RD, STE 202
PITTSFORD NY 14534-3805

CONTACT: KENYON BURHNAM
PHONE: 585-465-0099
EMAIL: KBURNHA2@U.ROCHESTER.EDU

NCDOT Driveway permit - Not Approved, resubmitted 4/22
NCDOT 16.1B Encroachment - Not Applied For
NCDOT 16.6 Encroachment - Not Approved
S. Sewer Encroachment - Not Applied For

Provide:
- Profile Views of Driveway Stems and Roadway Widening
- Cross Sections of Widening
- Typical Sections
- Pavement Sections
- Drainage Calculations
- Cost Estimate for Work in ROW

I have included the relevant pages from the LAPP project in this area. These plans have been put out for build, and should not change going forward. Please include roadway drawings for all changes to NCDOT roadways that are not accounted for in the U-6241 plans.

CONSTRUCTION NOTES

1. ALL CONSTRUCTION SHALL BE IN ACCORDANCE WITH APPLICABLE MUNICIPALITY STANDARDS, SPECIFICATIONS, AND DETAILS. WORK IN THIS PROJECT SHALL ALSO CONFORM TO THESE PLANS, THE LATEST EDITIONS OF THE NORTH CAROLINA DEPARTMENT OF TRANSPORTATION (NCDOT) ROAD AND BRIDGE SPECIFICATIONS, THE ROAD AND BRIDGE STANDARDS, THE NORTH CAROLINA EROSION AND SEDIMENT CONTROL HANDBOOK, THE NORTH CAROLINA EROSION AND SEDIMENT CONTROL REGULATIONS, THE FINAL GEOTECHNICAL REPORT, AND GENERAL DESIGN STANDARDS. IN THE EVENT OF CONFLICT BETWEEN ANY OF THESE STANDARDS, SPECIFICATIONS, OR PLANS, THE MOST STRINGENT SHALL GOVERN.
2. THE CONTRACTOR SHALL BE SOLELY RESPONSIBLE FOR TRENCH SAFETY DURING ALL PHASES OF CONSTRUCTION.
3. THE LOCATION AND SIZE OF EXISTING UTILITIES AS SHOWN IS APPROXIMATE ONLY. THE CONTRACTOR IS RESPONSIBLE FOR HORIZONTALLY AND VERTICALLY LOCATING AND PROTECTING ALL PUBLIC OR PRIVATE UTILITIES WHICH LIE IN OR ADJACENT TO THE CONSTRUCTION SITE. AT LEAST 48 HOURS PRIOR TO ANY DEMOLITION, GRADING, OR CONSTRUCTION ACTIVITY, THE CONTRACTOR SHALL NOTIFY THE NORTH CAROLINA ONE–CALL UTILITIES LOCATION SERVICE (ULOCO) AT 1–800–632–4949 FOR PROPER IDENTIFICATION OF EXISTING UTILITIES WITHIN THE SITE.
4. THE CONTRACTOR SHALL SALVAGE AND PROTECT ALL EXISTING POWER POLES, SIGNS, MANHOLES, TELEPHONE RISERS, WATER VALVES, ETC. DURING ALL CONSTRUCTION PHASES. THE CONTRACTOR SHALL REPAIR, AT HIS OWN EXPENSE, ANY EXISTING UTILITIES DAMAGED DURING CONSTRUCTION.
5. TRAFFIC CONTROL ON PUBLIC STREETS SHALL BE IN CONFORMANCE WITH THE TRAFFIC CONTROL PLAN, THE 'MANUAL OF UNIFORM TRAFFIC CONTROL DEVICES,' AND AS FURTHER DIRECTED BY CITY AND STATE INSPECTORS.
6. ANY DISCREPANCIES FOUND BETWEEN THE DRAWINGS AND SPECIFICATIONS AND SITE CONDITIONS OR ANY INCONSISTENCIES OR AMBIGUITIES IN DRAWINGS OR SPECIFICATIONS SHALL BE IMMEDIATELY REPORTED TO THE ENGINEER, IN WRITING, WHO SHALL PROMPTLY ADDRESS SUCH INCONSISTENCIES OR AMBIGUITIES. WORK DONE BY THE CONTRACTOR AFTER HIS DISCOVERY OF SUCH DISCREPANCIES, INCONSISTENCIES, OR AMBIGUITIES SHALL BE DONE AT THE CONTRACTOR'S RISK.
7. A PRE–CONSTRUCTION CONFERENCE SHALL BE HELD PRIOR TO THE START OF CONSTRUCTION. THE CONTRACTOR SHALL ARRANGE THE MEETING WITH THE CITY ENGINEERING DIVISION.
8. CONTRACTOR IS RESPONSIBLE FOR VERIFYING ALL REQUIRED PERMITS AND APPROVALS PRIOR TO COMMENCING CONSTRUCTION.
9. ALL AREAS SHALL BE GRADED FOR POSITIVE DRAINAGE, AND AS SHOWN ON THESE PLANS. THE CONTRACTOR SHALL MAINTAIN ADEQUATE SITE DRAINAGE DURING ALL PHASES OF CONSTRUCTION. THE CONTRACTOR SHALL USE SILT FENCES (OR OTHER METHODS APPROVED BY THE ENGINEER AND APPLICABLE MUNICIPALITY) AS REQUIRED TO PREVENT SILT AND CONSTRUCTION DEBRIS FROM FLOWING ONTO ADJACENT PROPERTIES. CONTRACTOR SHALL COMPLY WITH ALL APPLICABLE FEDERAL, STATE, OR LOCAL EROSION, CONSERVATION, AND SILTATION ORDINANCES. CONTRACTOR SHALL REMOVE ALL TEMPORARY EROSION CONTROL DEVICES UPON COMPLETION OF PERMANENT DRAINAGE FACILITIES AND THE ESTABLISHMENT OF A STAND OF GRASS OR OTHER GROWTH TO PREVENT EROSION.
10. THE CONTRACTOR SHALL CLEAR AND GRUB THE SITE AND PLACE, COMPACT, AND MOISTURE CONDITION ALL FILL PER THE PROJECT GEOTECHNICAL ENGINEER'S SPECIFICATIONS. THE FILL MATERIAL TO BE USED SHALL BE APPROVED BY THE GEOTECHNICAL ENGINEER PRIOR TO PLACEMENT.
11. MATERIALS USED TO CONSTRUCT EMBANKMENTS FOR ANY PURPOSE, BACKFILL AROUND DRAINAGE STRUCTURES, OR IN UTILITY TRENCHES FOR ANY OTHER DEPRESSION REQUIRING FILL OR BACKFILL SHALL BE COMPACTED TO 95% OF MAXIMUM DENSITY AS DETERMINED BY THE STANDARD PROCTOR TEST AS SET OUT IN ASTM STANDARD D698. STONE BACKFILL SHALL BE COMPACTED TO 95% MAXIMUM DENSITY AS DETERMINED BY THE MODIFIED PROCTOR TEST AS SET OUT IN ASTM STANDARD D1557. THE CONTRACTOR SHALL, PRIOR TO ANY OPERATIONS INVOLVING FILLING OR BACKFILLING, SUBMIT THE RESULTS OF THE PROCTOR TEST TOGETHER WITH A CERTIFICATION THAT THE SOIL TESTED IS REPRESENTATIVE OF THE MATERIALS TO BE USED ON THE PROJECT. TESTS SHALL BE CONDUCTED BY A CERTIFIED MATERIALS TESTING LABORATORY AND THE CERTIFICATIONS MADE BY A LICENSED PROFESSIONAL ENGINEER REPRESENTING THE LABORATORY.
12. PROPOSED CONTOURS AND GUTTER GRADIENTS ARE APPROXIMATE. PROPOSED SPOT ELEVATIONS AND ROADWAY PROFILES/SUPERELEVATIONS ARE TO BE USED IN CASE OF DISCREPANCY.
13. THE CONTRACTOR SHALL REVIEW, VERIFY AND COORDINATE ALL DIMENSIONS SHOWN ON PLANS, INCLUDING THE HORIZONTAL AND VERTICAL LOCATION OF CURB INLETS AND GRATE INLETS AND ALL UTILITIES CROSSING THE STORM SEWER PRIOR TO STARTING PROJECT.
14. ALL CURB JOINTS SHALL EXTEND THROUGH THE CURB. MINIMUM LENGTH OF OFFSET JOINTS AT RADIUS POINTS IS 1.5 FEET. ALL JOINTS SHALL BE SEALED WITH JOINT SEALANT.
15. ALL HANDICAP RAMPING, STRIPING, AND PAVEMENT MARKINGS SHALL CONFORM TO ADA REQUIREMENTS AND THE 'NORTH CAROLINA STATE BUILDING CODE, VOL. 1–C ACCESSIBILITY CODE.
16. OWNER SHALL PROVIDE FENCING AND OTHER SAFETY MEASURES NECESSARY IN AND AROUND ANY PROPOSED STORMWATER MANAGEMENT MEASURES (PONDS, WETLANDS, ETC.) OBTAINING PROPER PERMITS SHALL BE THE RESPONSIBILITY OF THE OWNER.
17. RETAINING WALLS EXCEEDING 30 INCHES IN HEIGHT SHALL INCLUDE FALL PROTECTION IN THE FORM OF A HANDRAIL OR FENCING ON THE HIGH SIDE OF THE RETAINING WALL.
18. PROPER COMPACTION OF ALL FILL SOILS PLACED ON SITE SHALL BE THE RESPONSIBILITY OF THE CONTRACTOR. COMPACTION SHALL BE ADEQUATE TO SUPPORT THE PROPOSED USE OF AREAS IN WHICH FILL SOILS ARE PLACED. THE CONTRACTOR SHALL HIRE A GEOTECHNICAL ENGINEER TO TEST AND VERIFY THAT COMPACTION IS ADEQUATE FOR THE PROPOSED USE OF IN THE AREA OF FILL PLACEMENT.
19. ALL ASPECTS OF THIS PROJECT SHALL BE IN FULL COMPLIANCE WITH CURRENT ADA STANDARDS. IF THE CONTRACTOR NOTES ANY ASPECTS OF THE PROJECT WHICH ARE NOT IN COMPLIANCE, THE ENGINEER SHALL BE NOTIFIED PRIOR TO ANY FURTHER WORK BEING PERFORMED. ANY WORK PERFORMED AFTER THE CONTRACTOR NOTES SUCH A NON COMPLIANCE IS SUBJECT TO REMOVAL AND REPAIR AT THE CONTRACTOR'S EXPENSE.
20. THE CONTRACTOR OR OWNER SHALL EMPLOY A GEOTECHNICAL ENGINEER TO TEST ALL EMBANKMENTS AND FILL PLACEMENT FOR PROPER COMPACTION. PROPER COMPACTION SHALL BE PER THE GEOTECHNICAL ENGINEER'S RECOMMENDATIONS OR THESE PLANS, WHICHEVER IS MORE STRINGENT. EMBANKMENTS FOR PONDS SHALL BE PLACED IN 6 INCH LOOSE LAYERS AND SHALL BE COMPACTED TO A DENSITY OF NO LESS THAN 95% OF THE STANDARD PROCTOR MAXIMUM DENSITY AT A MOISTURE CONTENT OF + OR – TWO PERCENTAGE POINTS OF THE OPTIMUM MOISTURE CONTENT IN ACCORDANCE WITH ASTM D698. THE CONTRACTOR SHALL TAKE PHOTOGRAPHS OF THE OUTLET STRUCTURE AT ALL AT ALL PHASES OF INSTALLATION AND SHALL RETAIN WITH GEOTECHNICAL TESTING DATA. THE CONTRACTOR SHALL ALSO RETAIN ALL SHIPPING RECORDS AND SPECIFICATIONS FOR THE OUTLET STRUCTURE MATERIALS AND STRUCTURES. ALL OF THE ABOVE DATA MAY BE REQUIRED AS PART OF THE MUNICIPALITY AS–BUILT PROCESS AND SHALL BE MADE AVAILABLE TO THE ENGINEER UPON REQUEST. THE CONTRACTOR AND OWNER SHALL HAVE DOCUMENTATION OF THESE TESTS AVAILABLE UPON REQUEST.
21. RETAINING WALLS SHOWN HEREIN SHALL BE DESIGNED BY A QUALIFIED PROFESSIONAL ENGINEER WITH EXPERIENCE DESIGNING RETAINING WALLS. AT LEAST 14 DAYS PRIOR TO BEGINNING CONSTRUCTION OF RETAINING WALLS, THE CONTRACTOR SHALL CONTACT THE OWNER'S GEOTECHNICAL ENGINEER TO SCHEDULE AND COORDINAT ALL APPROPRIATE INSPECTIONS, TESTING, AND VERIFICATION NECESSARY DURING RETAINING WALL CONSTRUCTION. THE GEOTECHNICAL ENGINEER SHALL PROVIDE CONTINUOUS INSPECTION, TESTING AND VERIFICATION FOR THE DURATION OF RETAINING WALL CONSTRUCTION. PROPER SCHEDULING, EXECUTION, AND RECORD KEEPING FOR ALL REQUIRED INSPECTIONS, TESTING, AND VERIFICATION SHALL BE THE RESPONSIBILITY OF THE CONTRACTOR. SUCH RECORDS SHALL BE RETAINED AND SHALL BE PROVIDED TO THE OWNER AND BASS, NIXON & KENNEDY, INC. ALL MONITORING, TESTING, AND VERIFICATION SHALL CONFORM TO THE MOST RECENT VERSION OF THE NC BUILDING CODE CHAPTER 18, SECTION 1806 OR THE WALL DESIGN ENGINEER'S SPECIFICATIONS, WHICHEVER IS MORE STRINGENT.

ALL CONSTRUCTION MUST CONFORM TO THE UNDERGROUND UTILITY PROTECTION ACT
BEFORE YOU DIG!
CONTACT ONE–CALL CENTER
1–800–632–4949

QUANTITY SUMMARY

PHASE NUMBER(S)	1
NUMBER OF LOT(S)	1
LOT NUMBER(S) BY PHASE	N/A
NUMBER OF UNITS	180
LIVABLE BUILDINGS	6
OPEN SPACE (AC)	3.48
NUMBER OF OPEN SPACE LOTS	N/A
PUBLIC WATER (LF)	875
PRIVATE SEWER (LF)	550
PUBLIC STREET (LF)	0
PUBLIC SIDEWALK (LF)	255

ENGINEER:

BNK

BASS, NIXON & KENNEDY, INC.
CONSULTING ENGINEERS
6310 CHAPEL HILL ROAD, SUITE 250
RALEIGH, NORTH CAROLINA 27607
TELEPHONE: (919) 851-4422
FAX: (919) 851-8968
CERTIFICATION NUMBERS: NCBELS (C-0110)
NCBOLA (C-0267)

CONTACT: MARTY D. BIZZELL, PE, CPESC
EMAIL: Marty.Bizzell@BNKinc.com

NORTH CAROLINA PROFESSIONAL SEAL 036908 ENGINEER MARTY D. BIZZELL
04/20/22

EROSION CONTROL, STORMWATER AND FLOODPLAIN MANAGEMENT
APPROVED
EROSION CONTROL ☐ S-_____
STORMWATER MGMT. ☐ S-_____
FLOOD STUDY ☐ S-_____
DATE_____
WAKE COUNTY NORTH CAROLINA EFFECTIVE 06/19/18
ENVIRONMENTAL CONSULTANT SIGNATURE

TOWN OF ROLESVILLE PROJECT NO.
BASS, NIXON & KENNEDY, INC.

03-19157 COBBLESTONE VILLAGE CONSTRUCTION SUBMITTAL

R:\2019\19157 - Rolesville Town Center\CIVIL\04 Construction\00 - 19157_Cover.dwg, COVER, 4/20/2022 3:26:38 PM, marc.mueller

CITY OF RALEIGH - PLANS AUTHORIZED FOR CONSTRUCTION

Electronic Approval: This approval is being issued electronically. This approval is valid only upon the signature of a City of Raleigh Review Officer below. The City will retain a copy of the approved plans. Any work authorized by this approval must proceed in accordance with the plans kept on file with the City. This electronic approval may not be edited once issued. Any modification to this approval once issued will invalidate this approval.

City of Raleigh Development Approval ______________________________

Raleigh Water Review Officer

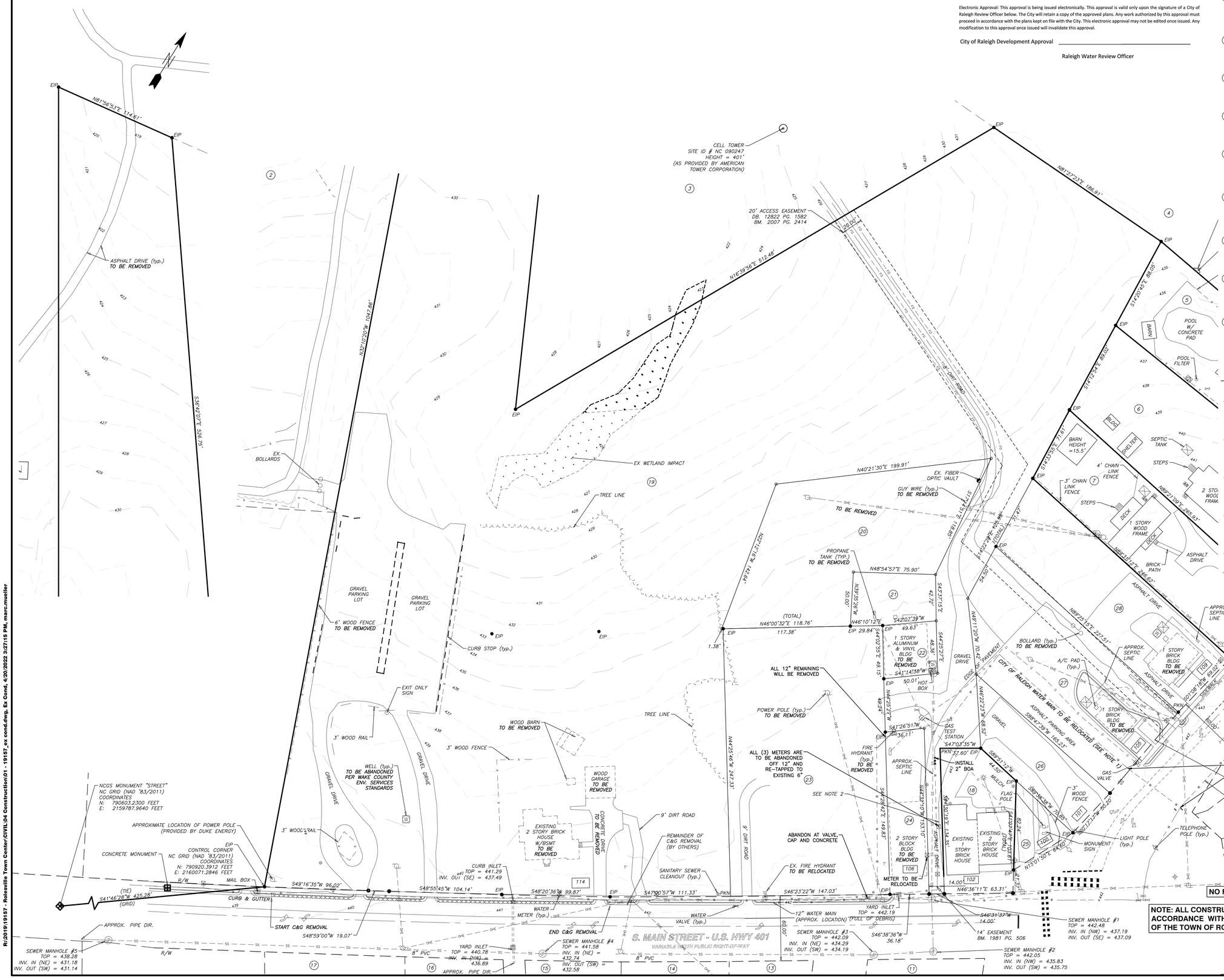

NO FLOODPLAINS EXIST ON-SITE

NOTE: ALL CONSTRUCTION ACTIVITY MUST BE IN ACCORDANCE WITH THE ACCEPTED POLICIES OF THE TOWN OF ROLESVILLE AND NCDOT

SEAL 036908
MARTY D. BIZZELL
04/20/22

No.	Owner	PIN	REID	DB / PG	Zoning	Use
①	POWERS, MARK R POWERS, MARY K	1759-91-8091	0055852	DB 9384 PG 2517	R-1	SINGLE FAMILY
②	TOWN OF ROLESVILLE	1759-92-2076	0069979	DB 9754 PG 1416	R-1	ROLESVILLE TOWN PARK
③	TELECOM TOWERS LLC	1759-91-8780	0060854	DB 12822 PG 1582	R-1	CELL TOWER
④	MAY, WILLIAM A	1769-02-3002	0075102	DB 16-E PG 1544	R-1	SINGLE FAMILY
⑤	WILKINS, ROXEY MANGUM WILKINS, WESLEY C SR	1769-01-4849	0045890	DB 13684 PG 719	R-1	SINGLE FAMILY
⑥	WILKINS, ROXEY MANGUM WILKINS, WESLEY C SR	1769-01-4840	0002959	DB 16593 PG 1043	R-1	SINGLE FAMILY
⑦	SELF, LINDA ESTELLE MERRITT WILKINS, ROXEY M	1769-01-4751	0046996	DB 16423 PG 2434	R-1	MANUFACTURED HOME
⑧	HAMILTON, ELIZABETH WILIAMS WILLIAMS, FRED J III	1769-01-7801	0078003	DB 18-10 PG 63	R-1	SINGLE FAMILY
⑨	WILLIAMS, SUSIE H	1769-01-6663	0078000	DB 012976 PG 01157	C	VACANT
⑩	TOWN OF ROLESVILLE	1769-01-7654	0077362	DB 014567 PG 0741	C	SINGLE FAMILY
⑪	EDDINS FAMILY LLC	1769-01-5274	0035722	DB 009971 PG 02251	C	COMMERCIAL
⑫	DRAGONFLY INVESTMENTS NC LLC	1769-01-5157	0073627	DB 017752 PG 00806	C	COMMERCIAL
⑬	KET REAL ESTATE LLC	1769-01-5048	0073596	DB 015925 PG 00965	R-1	TWOFAM
⑭	WIGGINS, BERTIE W	1769-01-4083	0073786	DB 002265 PG 00405	R-1	SINGLE FAMILY
⑮	DIXON, BESSIE W	1769-00-4915	0073787	DB 002265 PG 00087	R-1	SINGLE FAMILY
⑯	WELLS, ANGELA S	1769-00-3849	0073785	DB 005317 PG 00189	R-1	SINGLE FAMILY
⑰	COOKE, WILLIS NANCY V	1769-00-2815	0014688	DB 001810 PG 00563	R-1	SINGLE FAMILY
⑱	PRIVETTE PROPERTIES LLC	1769-00-5401	0118309	DB 012763 PG 02560	C	COMMERCIAL

PROPERTIES TO BE RECOMBINED

No.	Owner	PIN	REID	DB / PG	Zoning	Use
⑲	TOWN OF ROLESVILLE	1769-01-0454	0072561	DB 012794 PG 01827	TC	SINGLE FAMILY
⑳	TOWN OF ROLESVILLE	1769-01-2542	0009020	DB 016084 PG 02121	TC	VACANT
㉑	TOWN OF ROLESVILLE	1769-01-3520	003740	DB 016084 PG 02121	TC	CHURCH
㉒	TOWN OF ROLESVILLE	1769-01-3468	0036741	DB 014688 PG 00212	TC	MUNC BLD
㉓	TOWN OF ROLESVILLE	1769-01-3355	0072559	DB 014688 PG 00212	TC	SINGLE TEN
㉔	TOWN OF ROLESVILLE	1769-01-4357	00089034	DB 016566 PG 01875	TC	SNGL TEN
㉕	TOWN OF ROLESVILLE	1769-01-5454	0002960	DB 016074 PG 01997	TC	VACANT
㉖	TOWN OF ROLESVILLE	1769-01-5408	0008897	DB 015827 PG 00426	TC	VACANT
㉗	TOWN OF ROLESVILLE	1769-01-4576	0012576	DB 005741 PG 00921	TC	MUNC BLD
㉘	TOWN OF ROLESVILLE	1769-01-4654	0060993	DB 016026 PG 00705	TC	SINGL TEN

NOTES:
1. EXISTING WATER MAIN TO REMAIN ACTIVE UNTIL THE PROPOSED WATER LINE IS INSTALLED, TESTED, AND READY TO BE ACTIVE.
2. SERVICES TO EXISTING BUILDINGS TO REMAIN IN PLACE THROUGHOUT CONSTRUCTION. CONTRACTOR TO VERIFY SERVICE LOCATIONS.
3. EXISTING WELLS AND SEPTIC SYSTEMS TO BE ABANDONED PER ALL WAKE COUNTY ENVIRONMENTAL SERVICES, STANDARDS & SPECIFICATIONS.

BNK

BASS, NIXON & KENNEDY, INC.
CONSULTING ENGINEERS
6310 CHAPEL HILL ROAD, SUITE 250, RALEIGH, NC 27607
TELEPHONE: (919)851-4422 FAX: (919)851-8968
CERTIFICATION NUMBERS: NCBELS (C-0110); NCBOLA (C-0267)

NO.	DATE	DESCRIPTION	BY

REVISIONS

03-19157	PROGRESS	MRM
JOB NO.	DATE	DRAWN BY

EXISTING CONDITIONS & DEMOLITION PLAN

SCALE: 1" = 40'   CHK BY: MDB

COBBLESTONE VILLAGE

MIXED USE DEVELOPMENT

TOWN OF ROLESVILLE, WAKE COUNTY, NORTH CAROLINA

SHEET
C0.1

NOT RELEASED FOR CONSTRUCTION OR BID SOLICITATION

TOWN OF ROLESVILLE PROJECT NO.

R:\2019\19157 - Rolesville Town Center\CIVIL\04 Construction\01 - 19157_ex cond.dwg, Ex Cond, 4/20/2022 3:27:15 PM, marc.mueller

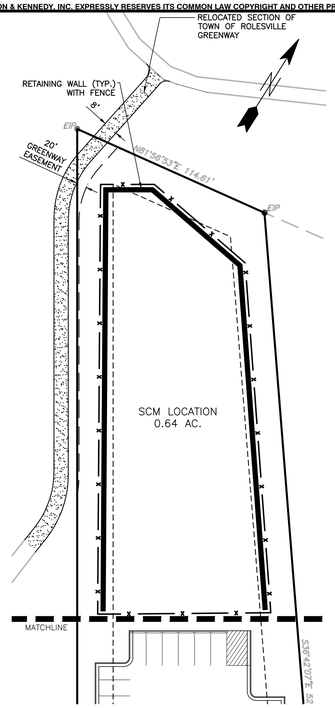

CONDITIONS OF APPROVAL:

1. TECHNICAL REVIEW COMMITTEE APPROVAL AND ISSUANCE OF REQUIRED PERMITS FROM ALL AGENCIES MUST BE ACHIEVED AND SUBMITTED FOR REVIEW AND RECORD RETENTION PRIOR TO FINAL SIGNATURE AND APPROVAL OF THE SITE PLAN.
2. CROSS-CONNECTION ACCESS TO ONE OF THE THREE ADJACENT PROPERTIES TO THE EAST ALONG W. YOUNG STREET (111, 113, AND 115 W. YOUNG STREET) FOR FUTURE DEVELOPMENT WILL BE PROVIDED.
3. BEST EFFORTS WILL BE MADE FOR GREENWAY ACCESS ACROSS THE TELECOM TOWNERS, LLC SITE FOR PEDESTRIAN TRAFFIC FROM OVERFLOW PARKING SITE LOCATED AT THE TERMINUS OF SCARBORO STREET IN MAIN STREET PARK.
4. BASED UPON TESTIMONY REGARDING SHARED PARKING IN A MIXED-USE DEVELOPMENT, A 15% PARKING REDUCTION IS GRANTED RESULTING IN 467 REQUIRED SPACES.
5. A MAXIMUM HEIGHT OF 60 FEET IS APPROVED PER THE BUILDING HEIGHT DESIGN ALTERNATIVE FOR THE SITE AS SHOWN ON THE SITE PLAN, PROVIDED ALL OTHER APPLICABLE STANDARDS ACCORDING TO THE LDO ARE MET.

CITY OF RALEIGH - PLANS AUTHORIZED FOR CONSTRUCTION

Electronic Approval: This approval is being issued electronically. This approval is valid only upon the signature of a City of Raleigh Review Officer below. The City will retain a copy of the approved plans. Any work authorized by this approval must proceed in accordance with the plans kept on file with the City. This electronic approval may not be edited once issued. Any modification to this approval once issued will invalidate this approval.

City of Raleigh Development Approval _____

Raleigh Water Review Officer

OVERALL SITE DATA

SITE AREA	10.96 AC (477,418 SF±)
P.I.N.	1769-01-0454, 1769-01-4357, 1769-01-3355 1769-01-3468, 1769-01-2542, 1769-01-3520 1769-01-4654,1769-01-5454, 1769-01-5408, 1769-01-4576
ZONING DISTRICT:	TOWN CENTER (TC) RESIDENTIAL, MIXED USE
OPEN SPACE AREA:	3.48 AC
IMPERVIOUS AREA:	7.48 AC
IMPERVIOUS AREA (%):	68%
APARTMENT MIX	
1 BEDROOM	112 UNITS
2 BEDROOM	64 UNITS
TOTAL APARTMENTS	176 UNITS
RESIDENTIAL DENSITY:	16.06 UNITS/ACRE
RETAIL/COMMERCIAL:	49,830 SQUARE FEET
MUNICIPAL FLEX SPACE:	15,900 SQUARE FEET
TOTAL:	65,730 SQUARE FEET
EVENT SPACE:	0.44 ACRES/ 18,976 SQUARE FEET

PARKING REQUIREMENTS PER TC DISTRICT DEVELOPMENT STANDARDS

MIXED USE RESDENTIAL: 2.0 SPACES PER UNIT	176 x 2 = 352 SPACES REQUIRED
MIXED USE NON-RESIDENTIAL: 3 SPACES PER 1000 GSF	65,730/1000 x 3 = 197 SPACES REQUIRED
TOTAL PARKING REQUIRED/PROVIDED:	549 SPACES REQUIRED/ 468 PROVIDED

5% OF ON STREET PARKING MAY BE COUNTED AS REQUIRED PARKING (28 ALLOWED/ 24 PROVIDED)
15% PARKING REDUCTION ALLOWED FOR SHARED PARKING: 549 x .85 = 467 REQUIRED

BUILDING 1:	51,882 SF APARTMENTS
BUILDING 2:	16,641 SF RETAIL
BUILDING 3:	11,405 SF RETAIL
BUILDING 4:	15,900 SF MUNICIPAL
BUILDING 5:	3,816 FLEX
BUILDING 6:	18,148 SF RETAIL
BUILDING 7:	51,882 SF APARTMENTS
BUILDING 8:	17,453 SF APARTMENTS

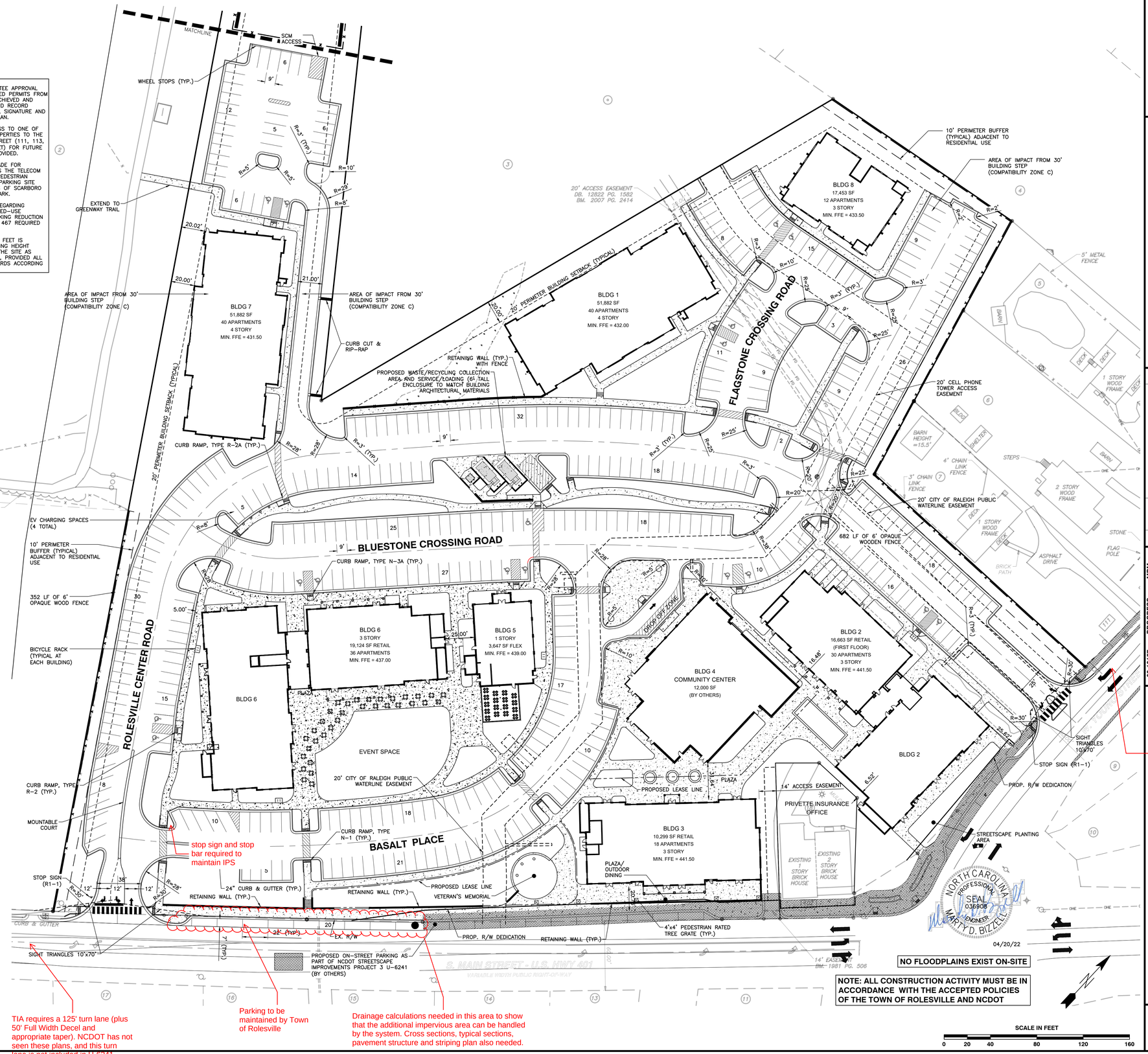

BNK

BASS, NIXON & KENNEDY, INC.
CONSULTING ENGINEERS
6310 CHAPEL HILL ROAD, SUITE 250, RALEIGH, NC 27607
TELEPHONE: (919)851-4422 FAX: (919)851-8968
CERTIFICATION NUMBERS: NCBELS (C-0110); NCBOLA (C-0267)

NO.	DATE	DESCRIPTION	BY
		REVISIONS	

03-19157 PROGRESS MRM
JOB NO. DATE DRAWN BY
SITE PLAN
SCALE: 1" = 40' CHK BY:MDB

COBBLESTONE VILLAGE
MIXED USE DEVELOPMENT
TOWN OF ROLESVILLE, WAKE COUNTY

SHEET C1.1

NOT RELEASED FOR CONSTRUCTION OR

TOWN OF ROLESVILLE PROJECT NO.

R:\2019\19157 - Rolesville Town Center\CIVIL\04 Construction\02 - 19157_Site.dwg, Site Plan, 4/20/2022 3:27:44 PM, marc.mueller

CITY OF RALEIGH - PLANS AUTHORIZED FOR CONSTRUCTION

Electronic Approval: This approval is being issued electronically. This approval is valid only upon the signature of a City of Raleigh Review Officer below. The City will retain a copy of the approved plans. Any work authorized by this approval must proceed in accordance with the plans kept on file with the City. This electronic approval may not be edited once issued. Any modification to this approval once issued will invalidate this approval.

City of Raleigh Development Approval _____

Raleigh Water Review Officer

Public
Water Distribution / Extension System
The City of Raleigh consents to the connection and extension of the City's public water system as shown on this plan. The material and Construction methods used for this project shall conform to the standards and specifications of the City's Public Utilities Handbook.

City of Raleigh Public Utilities Department Permit # W-3879

Authorization to Construct See digital signature

Private
Sewer Collection / Extension System
The City of Raleigh consents to the connection to its public sewer system and extension of the private sewer collection system as shown on this plan. The material and constructions methods used for this project shall conform to the standards and specifications of the City's Public Utilities Handbook.

City of Raleigh Public Utilities Department Permit # S-4962 (P)

Authorization to Construct See digital signature

ATTENTION CONTRACTORS

The ***Construction Contractor*** responsible for the extension of water, sewer, and/or reuse, as approved in these plans, is responsible for ***contacting*** the ***Public Utilities Department*** at ***(919) 996-4540*** at least ***twenty four hours*** prior to beginning any of their construction.

Failure to notify both ***City Departments*** in advance of beginning construction, will result in the issuance of ***monetary fines***, and require reinstallation of any water or sewer facilities not inspected as a result of this notification failure.

Failure to call for ***Inspection***, ***Install a Downstream Plug***, have ***Permitted Plans*** on the ***Jobsite***, or any other ***Violation*** of ***City of Raleigh Standards*** will result in a ***Fine and Possible Exclusion*** from future work in the ***City of Raleigh***.

STANDARD UTILITY NOTES (as applicable):

1. All materials & construction methods shall be in accordance with City of Raleigh design standards, details & specifications (reference: CORPUD Handbook, current edition)
2. Utility separation requirements:
   a) A distance of 100' shall be maintained between sanitary sewer & any private or public water supply source such as an impounded reservoir used as a source of drinking water. If adequate lateral separation cannot be achieved, ferrous sanitary sewer pipe shall be specified & installed to waterline specifications. However, the minimum separation shall not be less than 25' from a private well or 50' from a public well
   b) When installing water &/or sewer mains, the horizontal separation between utilities shall be 10'. If this separation cannot be maintained due to existing conditions, the variation allowed is the water main in a separate trench with the elevation of the water main at least 18" above the top of the sewer & must be approved by the Public Utilities Director. All distances are measured from outside diameter to outside diameter
   c) Where it is impossible to obtain proper separation, or anytime a sanitary sewer passes over a watermain, DIP materials or steel encasement extended 10' on each side of crossing must be specified & installed to waterline specifications
   d) 5.0' minimum horizontal separation is required between all sanitary sewer & storm sewer facilities, unless DIP material is specified for sanitary sewer
   e) Maintain 18" min. vertical separation at all watermain & RCP storm drain crossings; maintain 24" min. vertical separation at all sanitary sewer & RCP storm drain crossings. Where adequate separations cannot be achieved, specify DIP materials & a concrete cradle having 6" min. clearance (per CORPUD details W-41 & S-49)
   f) All other underground utilities shall cross water & sewer facilities with 18" min. vertical separation required
3. Any necessary field revisions are subject to review & approval of an amended plan &/or profile by the City of Raleigh Public Utilities Department prior to construction
4. Contractor shall maintain continuous water & sewer service to existing residences & businesses throughout construction of project. Any necessary service interruptions shall be preceded by a 24 hour advance notice to the City of Raleigh Public Utilities Department
5. 3.0' minimum cover is required on all water mains & sewer forcemains. 4.0' minimum cover is required on all reuse mains
6. It is the developer's responsibility to abandon or remove existing water & sewer services not being used in redevelopment of a site unless otherwise directed by the City of Raleigh Public Utilities Department. This includes abandoning tap at main & removal of service from ROW or easement per CORPUD Handbook procedure
7. Install ¾" copper* water services with meters located at ROW or within a 2'x2' Waterline Easement immediately adjacent. *NOTE: it is the applicant's responsibility to properly size the water service for each connection to provide adequate flow & pressure*
8. Install 4" PVC* sewer services @ 1.0% minimum grade with cleanouts located at ROW or easement line & spaced every 75 linear feet maximum
9. Pressure reducing valves are required on all water services exceeding 80 psi; backwater valves are required on all sanitary sewer services having building drains lower than 1.0' above the next upstream manhole
10. All environmental permits applicable to the project must be obtained from NCDWQ, USACE &/or FEMA for any riparian buffer, wetland &/or floodplain impacts (respectively) prior to construction.
11. NCDOT / Railroad Encroachment Agreements are required for any utility work (including main extensions & service taps) within state or railroad ROW prior to construction
12. Grease Interceptor / Oil Water Separator sizing calculations & installation specifications shall be approved by the CORPUD FOG Program Coordinator prior to issuance of a Building Permit. Contact Tim Beasley at (919) 996-2334 or timothy.beasley@raleighnc.gov for more information
13. Cross-connection control protection devices are required based on degree of health hazard involved as listed in Appendix-B of the Rules Governing Public Water Systems in North Carolina. These guidelines are the minimum requirements. The devices shall meet American Society of Sanitary Engineering (ASSE) standards or be on the University of Southern California approval list. The devices shall be installed and tested (both initial and periodic testing thereafter) in accordance with the manufacturer's recommendations or the local cross-connection control program, whichever is more stringent. Contact Joanie Hartley at (919) 996-5923 or joanie.hartley@raleighnc.gov for more information

NOTES:
1. FOR BUILDING SEWER PLUMBING THE FURTHEST MAIN UNDER SLAB UPSET 1.5' BELOW FFE.
2. BACKFLOW PREVENTERS TO BE LOCATED INSIDE OF BUILDINGS 2, 3, 4, 5, & 6.

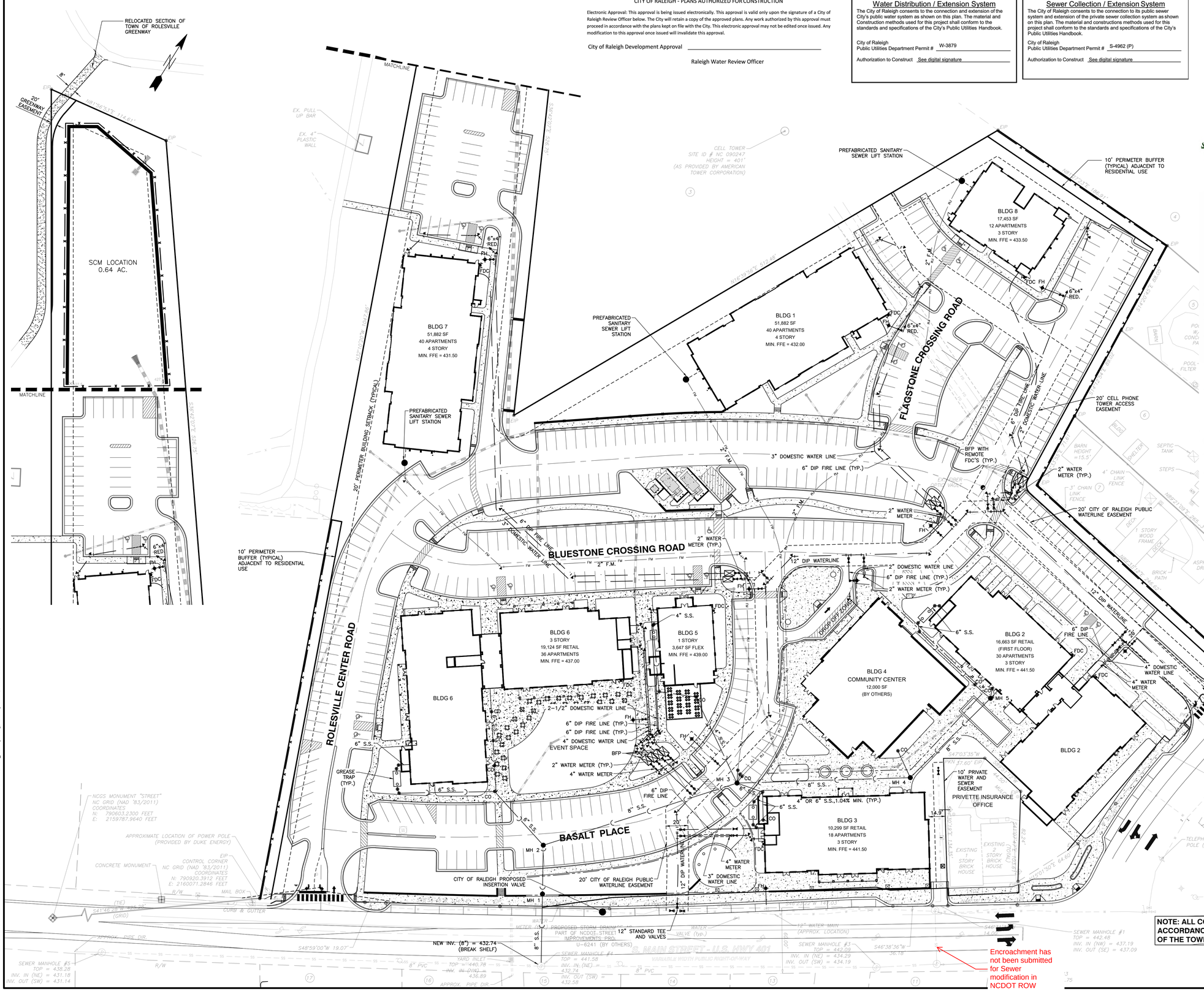

TOWN OF ROLESVILLE PROJECT NO.

BASS, NIXON & KENNEDY, INC.
CONSULTING ENGINEERS
6310 CHAPEL HILL ROAD, SUITE 250, RALEIGH, NC 27607
TELEPHONE: (919)851-4422 FAX: (919)851-8968
CERTIFICATION NUMBERS: NCBELS (C-0110); NCBOLA (C-0267)

NO.	DATE	DESCRIPTION	BY
		REVISIONS	

03-19157 PROGRESS MRM
JOB NO. DATE DRAWN BY
UTILITY PLAN
SCALE: 1" = 40' CHK BY:MDB

COBBLESTONE VILLAGE
MIXED USE DEVELOPMENT
TOWN OF ROLESVILLE, WAKE COUNTY, NORTH CAROLINA

SHEET C2.1

CITY OF RALEIGH - PLANS AUTHORIZED FOR CONSTRUCTION

Electronic Approval: This approval is being issued electronically. This approval is valid only upon the signature of a City of Raleigh Review Officer below. The City will retain a copy of the approved plans. Any work authorized by this approval must proceed in accordance with the plans kept on file with the City. This electronic approval may not be edited once issued. Any modification to this approval once issued will invalidate this approval.

City of Raleigh Development Approval _____

Raleigh Water Review Officer

Structure	d_o (ft)	Velocity (fps)	Length (ft)	Width (ft)	Depth (in)	Type	d_{50}
FES 1	2.00	7.4	12	6	22	Class 'B'	6" - 13"
FES 3	3.00	6.5	18	9	22	Class 'B'	6" - 13"

* Per NYDoT Dissipator Schedule Fig.1

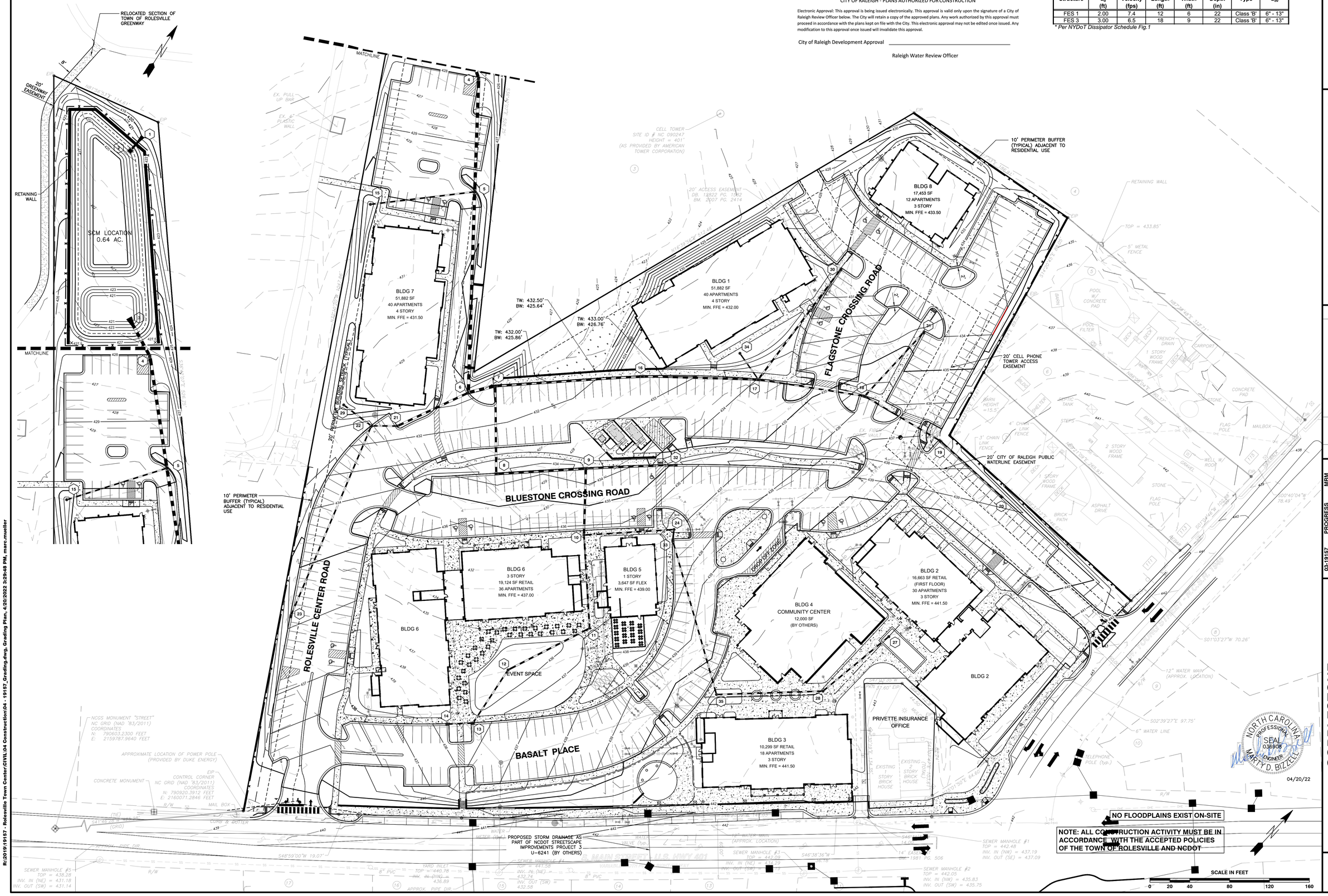

R:\2019\19157 - Rolesville Town Center\CIVIL\04 Construction\04 - 19157_Grading.dwg, Grading Plan, 4/20/2022 3:29:46 PM, marc.mueller

BASS, NIXON & KENNEDY, INC.
CONSULTING ENGINEERS
6310 CHAPEL HILL ROAD, SUITE 250, RALEIGH, NC 27607
TELEPHONE: (919)851-4422 FAX: (919)851-8968
CERTIFICATION NUMBERS: NCBELS (C-0110); NCBOLA (C-0267)

NO.	DATE	DESCRIPTION	BY
		REVISIONS	

JOB NO. 03-19157 | DATE | PROGRESS | DRAWN BY MRM

GRADING PLAN

SCALE: 1" = 40' | CHK BY: MDB

COBBLESTONE VILLAGE
MIXED USE DEVELOPMENT
TOWN OF ROLESVILLE, WAKE COUNTY, NORTH CAROLINA

SHEET **C3.1**

TOWN OF ROLESVILLE PROJECT NO.

NOT RELEASED FOR CONSTRUCTION OR BID SOLICITATION

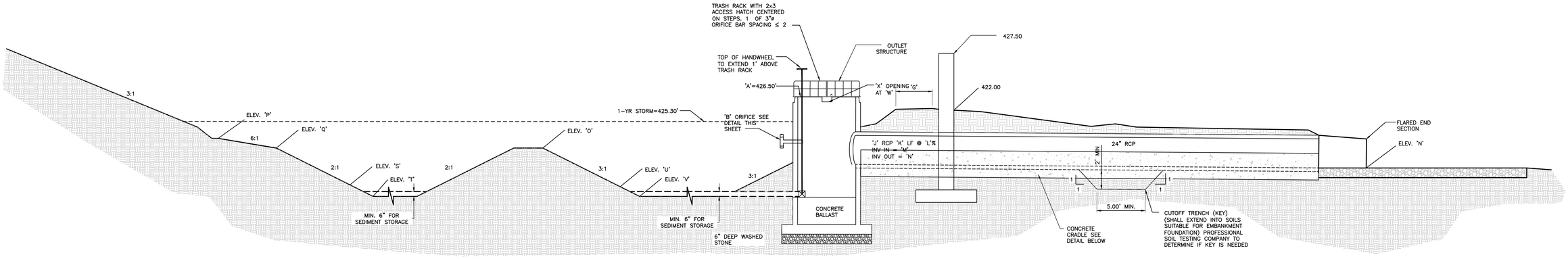

CROSS-SECTION OF WET POND A-A

NTS

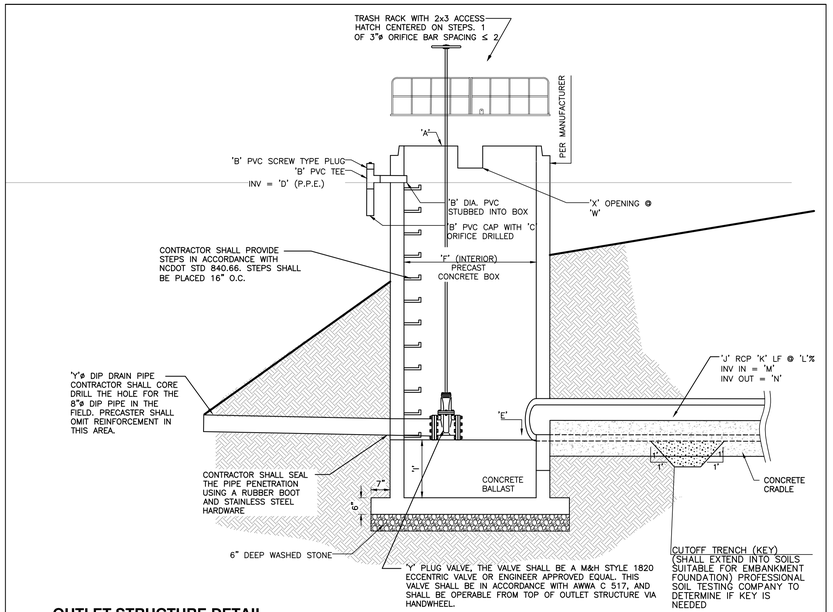

OUTLET STRUCTURE DETAIL

NOT TO SCALE

BOUYANCY CALCULATIONS FOR RISER/BARREL
COBBLESTONE VILLAGE
WET POND - SCM

Square Riser Inside Length (ft):	4.0
Riser Wall Thickness (in):	6
Pond Bottom Elevation (ft):	420.00
Riser Crest Elevation (ft):	426.50
Density of Riser Matl (lb/cf):	150.00
Pipe Inside Diameter (in):	24
Pipe Wall Thickness (in):	3
Length of Pipe Exposed (ft):	1.00
Density H2O (lb/cf):	62.40
Volume H2O Displaced by Riser (cf):	131.63
Weight H2O Displaced by Riser (lb):	8213.40
Volume H2O Displaced by Pipe (cf):	4.91
Weight H2O Displaced by Pipe (lb):	306.31
Total Uplift Force (lb):	8519.71
Weight of Riser (lb):	4,144
Weight of Pipe (lb):	265.07
Pipe/Riser Downward Force (lb):	4408.82

Ballast Concrete:

Minimum Factor of Safety:	1.2
Required ballast thickness (in):	37.02
Provided Ballast Thickness (in):	40
Total Downward Force (lb):	10,692
Provided Factor of Safety:	1.25

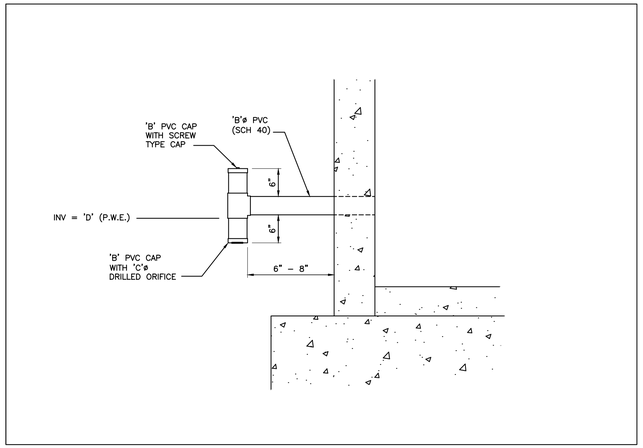

INVERTED INTAKE DETAIL (RISER)

NTS

POND LEGEND - SCM

	Description	Design	As-Built
A	Top of Riser	426.50 ft	
B	Diameter of PVC Drawdown Pipe	4 in	
C	Drawdown Orifice Opening	2.5 in	
D	Drawdown Pipe Elevation / Permanent Pool	424.50 ft	
E	Inside Bottom Riser Elevation	420.00 ft	
F	Outlet Structure Size	4ft x 4ft	
G	Top of Berm Width	10 ft	
H	Top of Dam	428.00 ft	
I	Ballast Thickness	40 in	
J	Size of Outlet Pipe	24 in	
K	Length of Outlet Pipe	18 ft	
L	Slope of Outlet Pipe	2.78 %	
M	Invert in Outlet Pipe	420.00 ft	
N	Invert Out Outlet Pipe	419.80 ft	
O	Top Elevation Forebay Berm	424.00 ft	
P	Elevation Top of Litoral Shelf	425.00 ft	
Q	Elevation Bottom of Litoral Shelf	424.00 ft	
R	Slope of Litoral Shelf	6:1	
S	Sediment Cleanout Elevation Forbay	422.00 ft	
T	Bottom Elevation Forebay	421.00 ft	
U	Sediment Cleanout Elevation Permanent Pool	421.00 ft	
V	Bottom Elevation Permanent Pool	420.00 ft	
W	Elevation Secondary Weir	426.20 ft	
X	Width Secondary Weir	12 in	

Special Instructions

Place Drawdown pipe opposite of outlet pipe and ensure a minimum of 12" clearance between drawdown pipe opening and ground elevation to allow for proper drainage. Place secondary weir above drawdown pipe on same side of outlet structure.

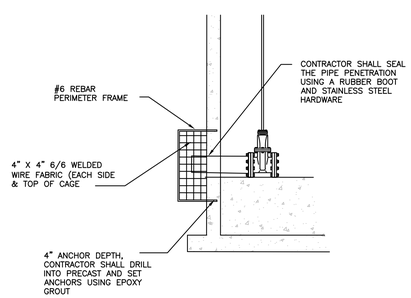

(IF APPLICABLE) EMERGENCY DRIP DRAIN TRASH RACK DETAIL

NOT TO SCALE

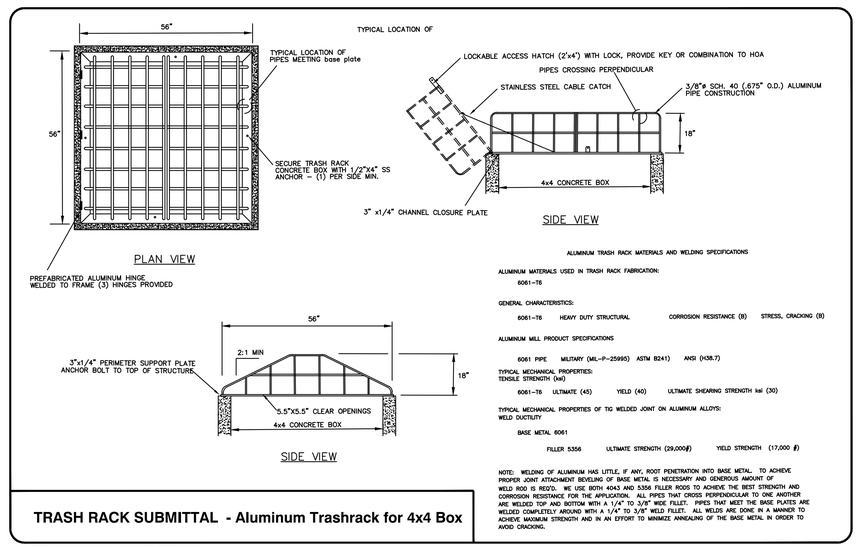

TRASH RACK SUBMITTAL - Aluminum Trashrack for 4x4 Box

ALUMINUM TRASH RACK MATERIALS AND WELDING SPECIFICATIONS

ALUMINUM MATERIALS USED IN TRASH RACK FABRICATION:

6061-T6

GENERAL CHARACTERISTICS:

6061-T6 HEAVY DUTY STRUCTURAL CORROSION RESISTANCE (B) STRESS, CRACKING (B)

ALUMINUM MILL PRODUCT SPECIFICATIONS

6061 PIPE MILITARY (MIL-P-25995) ASTM B241) ANSI (H38.7)

TYPICAL MECHANICAL PROPERTIES:
TENSILE STRENGTH (ksi)

6061-T6 ULTIMATE (45) YIELD (40) ULTIMATE SHEARING STRENGTH ksi (30)

TYPICAL MECHANICAL PROPERTIES OF TIG WELDED JOINT ON ALUMINUM ALLOYS:
WELD DUCTILITY

BASE METAL 6061

FILLER 5356 ULTIMATE STRENGTH (29,000#) YIELD STRENGTH (17,000 #)

NOTE: WELDING OF ALUMINUM HAS LITTLE, IF ANY, ROOT PENETRATION INTO BASE METAL. TO ACHIEVE PROPER JOINT ATTACHMENT BEVELING OF BASE METAL IS NECESSARY AND GENEROUS AMOUNT OF WELD ROD IS REQ'D. WE USE BOTH 4043 AND 5356 FILLER RODS TO ACHIEVE THE BEST STRENGTH AND CORROSION RESISTANCE FOR THE APPLICATION. ALL PIPES THAT CROSS PERPENDICULAR TO ONE ANOTHER ARE WELDED TOP AND BOTTOM WITH A 1/4" TO 3/8" WIDE FILLET. PIPES THAT MEET THE BASE PLATES ARE WELDED COMPLETELY AROUND WITH A 1/4" TO 3/8" WELD FILLET. ALL WELDS ARE DONE IN A MANNER TO ACHIEVE MAXIMUM STRENGTH AND IN AN EFFORT TO MINIMIZE ANNEALING OF THE BASE METAL IN ORDER TO AVOID CRACKING.

TRASH RACK DETAIL

NTS

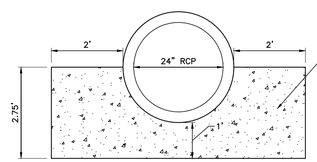

4000 PSI MONOLITHIC CONCRETE CRADLE UNDER FULL LENGTH OF PIPE. CONCRETE SHALL BE 2–2.5" SLUMP. CERTIFICATION THAT CONCRETE MEETS THESE SPECIFICATION'S SHALL BE PROVIDED TO THE OWNER. PLACE UNDER PIPE WITH HAND EQUIPMENT AND VIBRATE INTERNALLY FOR CONSOLIDATION, FINISH SHALL BE "ROUGH". FLOWABLE FILLS, SLURRIES, OR OR GELS ARE NOT PERMITTED.

CONCRETE CRADLE DETAIL

NOT TO SCALE

CITY OF RALEIGH - PLANS AUTHORIZED FOR CONSTRUCTION

Electronic Approval: This approval is being issued electronically. This approval is valid only upon the signature of a City of Raleigh Review Officer below. The City will retain a copy of the approved plans. Any work authorized by this approval must proceed in accordance with the plans kept on file with the City. This electronic approval may not be edited once issued. Any modification to this approval once issued will invalidate this approval.

City of Raleigh Development Approval _____

Raleigh Water Review Officer

NORTH CAROLINA PROFESSIONAL SEAL 036908 ENGINEER MARY D. BIZZELL

04/20/22

NO FLOODPLAINS EXIST ON-SITE

NOTE: ALL CONSTRUCTION ACTIVITY MUST BE IN ACCORDANCE WITH THE ACCEPTED POLICIES OF THE TOWN OF ROLESVILLE AND NCDOT

BASS, NIXON & KENNEDY, INC.
CONSULTING ENGINEERS
6310 CHAPEL HILL ROAD, SUITE 250, RALEIGH, NC 27607
TELEPHONE: (919)851-4422 FAX: (919)851-8968
CERTIFICATION NUMBERS: NCBELS (C-0110); NCBOLA (C-0267)

NO.	DATE	DESCRIPTION	BY
		REVISIONS	

03-19157 JOB NO. | PROGRESS DATE | MRM DRAWN BY

BMP DETAILS

SCALE: N.T.S. | CHK BY: MDB

COBBLESTONE VILLAGE
MIXED USE DEVELOPMENT
TOWN OF ROLESVILLE, WAKE COUNTY, NORTH CAROLINA

SHEET C3.2

TOWN OF ROLESVILLE PROJECT NO.

CONSTRUCTION SEQUENCE - STAGE 1

1. ONCE THE EROSION AND SEDIMENT CONTROL PLAN APPROVAL AND NCG01 CERTIFICATE OF COVERAGE ARE OBTAINED, SCHEDULE A PRECONSTRUCTION CONFERENCE WITH THE ENVIRONMENTAL CONSULTANT. OBTAIN A LAND–DISTURBING PERMIT.
2. INSTALL GRAVEL CONSTRUCTION PAD, TEMPORARY DIVERSIONS, SILT FENCE, SKIMMER SEDIMENT BASINS AND OTHER MEASURES AS SHOWN ON THE APPROVED PLAN. CLEAR ONLY AS NECESSARY TO INSTALL THESE DEVICES. SEED TEMPORARY DIVERSIONS, BERMS AND BASINS IMMEDIATELY AFTER CONSTRUCTION.
3. CALL ENVIRONMENTAL CONSULTANT FOR AN ONSITE INSPECTION BY THE ENVIRONMENTAL CONSULTANT TO OBTAIN A CERTIFICATE OF COMPLIANCE.
4. BEGIN CLEARING AND GRUBBING. MAINTAIN DEVICES AS NEEDED. ROUGH GRADE SITE.
5. STABILIZE SITE AS AREAS ARE BROUGHT UP TO FINISH GRADE WITH VEGETATION, PAVING, DITCH LININGS, ETC. SEED AND MULCH DENUDED AREAS PER GROUND STABILIZATION TIME FRAMES.
6. STABILIZE SITE AS AREAS ARE BROUGHT UP TO FINISH GRADE WITH VEGETATION, ALLEY PAVING, DITCH LININGS, ETC. SEED AND MULCH DENUDED AREAS PER GROUND STABILIZATION TIME FRAMES.
7. CALL ENVIRONMENTAL CONSULTANT FOR AN ONSITE INSPECTION BY THE ENVIRONMENTAL CONSULTANT PRIOR TO THE REMOVAL OF SKIMMER SEDIMENT BASIN #1.
8. CONTINUE TO SOIL EROSION PLAN STAGE 2 ONCE SKIMMER BASIN #1 HAS BEEN REMOVED.

NOTE: WAKE COUNTY MUST GRANT PERMISSION TO CONVERT THE SEDIMENT BASIN OVER TO THE STORMWATER USE PRIOR TO COMPLETING ANY RELATED WORK.

TOTAL DISTURBED AREA = 11.0 AC

DENUDED AREA = 10.96 AC

REQUIRED WAKE COUNTY BASIN REMOVAL AND/OR CONVERSION SEQUENCE

1. SCHEDULE A SITE MEETING WITH THE ENVIRONMENTAL CONSULTANT TO DETERMINE IF A BASIN CAN BE REMOVED OR CONVERTED TO A PERMANENT STORMWATER POND. INSTALL SILT FENCING OR OTHER TEMPORARY EROSION CONTROL MEASURES AS NEEDED PRIOR TO REMOVAL OF THE BASIN.
2. UTILIZE OUTLET STRUCTURES THAT WITHDRAW WATER FROM THE SEDIMENT BASIN SURFACE FOR DRAW DOWN OF WATER IN BASIN FOR MAINTENANCE OR CLOSE OUT UNLESS INFEASIBLE. SEE REQUIREMENTS OF NCG01 PERMIT PART II, SECTION G, ITEM (4) ENTITLED "DRAW DOWN OF SEDIMENT BASINS FOR MAINTENANCE OR CLOSE OUT" AND REFER TO WAKE COUNTY "FILTER BAG FOR DEWATERING ACTIVITIES" CONSTRUCTION DETAIL.
3. REMOVE BASIN(S) AND ASSOCIATED TEMPORARY DIVERSION DITCHES. IF CULVERT PIPES NEED TO BE EXTENDED, PERFORM THIS OPERATION AT THIS TIME. FINE GRADE AREA IN PREPARATION FOR SEEDING.
4. PERFORM SEEDBED PREPARATION, SEED, MULCH AND ASPHALT TACK ANY RESULTING BARE AREAS IMMEDIATELY.
5. INSTALL VELOCITY DISSIPATORS AND/OR LEVEL SPREADERS AS REQUIRED ON THE EROSION CONTROL PLAN.
6. WHEN SITE IS FULLY STABILIZED, CALL ENVIRONMENTAL CONSULTANT FOR APPROVAL OF REMOVING REMAINING TEMPORARY EROSION CONTROL MEASURES AND ADVICE ON WHEN SITE CAN BE ISSUED A CERTIFICATE OF COMPLETION. NOTE: A MEETING SHOULD ALSO BE SCHEDULED WITH THE ENVIRONMENTAL CONSULTANT TO DETERMINE WHEN A BASIN MAY BE CONVERTED FOR STORMWATER USE. SOME MUNICIPALITIES MAY ALSO REQUIRE THIS.

SEDIMENT BASIN SUMMARY CHART

Sediment Basin Number	1	2	3
Drainage Area (acres)	3.42	4.61	0.6
Q10(cfs)	(0.5)(7.22)(3.42)=12.35	(0.5)(7.22)(4.61)=16.64	(0.5)(7.22)(0.60)=2.17
Weir Size (ft)	10 x 1.5	10 x 1.5	10 x 1.5
Surface Area Required (SF)	(435)(12.35)=5,372	(435)(16.64)=7,238	(435)(2.17)=944
Volume Required (CF)	(1800)(3.42)= 6,156	(1800)(4.61)= 8,298	(1800)(0.60)= 1,080
Dimensions (ft)	see plans	see plans	see plans
Surface Area Provided (SF)	5,400	10,640	1,584
Volume Provided (CF)	13,572	27,636	2,563
Skimmer Size	4"	4"	3
Orifice Radius	0.5"	0.63"	0.25
Orifice Diameter	1.0"	1.25"	0.5
Drawdown Time (Days)	4.62	3.98	3.74
Number of Baffles	3	3	3

Structure	d_s (ft)	Velocity (fps)	Length (ft)	Width (ft)	Depth (ft)	Type	d_{50}
FES 1	2.00	7.4	12	6	22	Class 'B'	6" - 13"
FES 3	3.00	6.5	18	9	22	Class 'B'	6" - 13"
DV DITCH 1*	1.25	5.3	5	4	9	Class 'A'	3" - 6"
DV DITCH 2*	1.25	5.3	5	4	9	Class 'A'	3" - 6"
DV DITCH 3*	1.25	5.3	5	4	9	Class 'A'	3" - 6"
DV DITCH 4*	1.25	5.3	5	4	9	Class 'A'	3" - 6"
PIPE 1**	1.25	5.3	5	4	9	Class 'A'	3" - 6"
PIPE 2**	1.25	5.3	5	4	9	Class 'A'	3" - 6"

*Per NYDoT Dissipator Schedule Fig.1

DITCH/CHANNEL CALCULATIONS

DIVERSION DITCH ID	LENGTH (LF)	DA (Ac)	Q10 (CFS)	SLOPE (%)	V10 (FPS)	LINER *	PERMISSIBLE SHEAR STRESS (PSF)	CALCULATED SHEAR STRESS (PSF)
DV-1	296	1.02	2.34	2.00	2.01	SC150	2.00	0.78
DV-2	495	1.00	2.30	2.60	2.29	SC150	2.00	0.94
DV-3	442	0.52	1.19	1.80	0.92	SC150	1.80	0.29
DV-4	167	0.06	0.13	2.90	0.96	SC150	1.80	0.38

* NAG = NORTH AMERICAN GREEN OR EQUIVALENT

CITY OF RALEIGH - PLANS AUTHORIZED FOR CONSTRUCTION

Electronic Approval: This approval is being issued electronically. This approval is valid only upon the signature of a City of Raleigh Review Officer below. The City will retain a copy of the approved plans. Any work authorized by this approval must proceed in accordance with the plans kept on file with the City. This electronic approval may not be edited once issued. Any modification to this approval once issued will invalidate this approval.

City of Raleigh Development Approval _____

Raleigh Water Review Officer

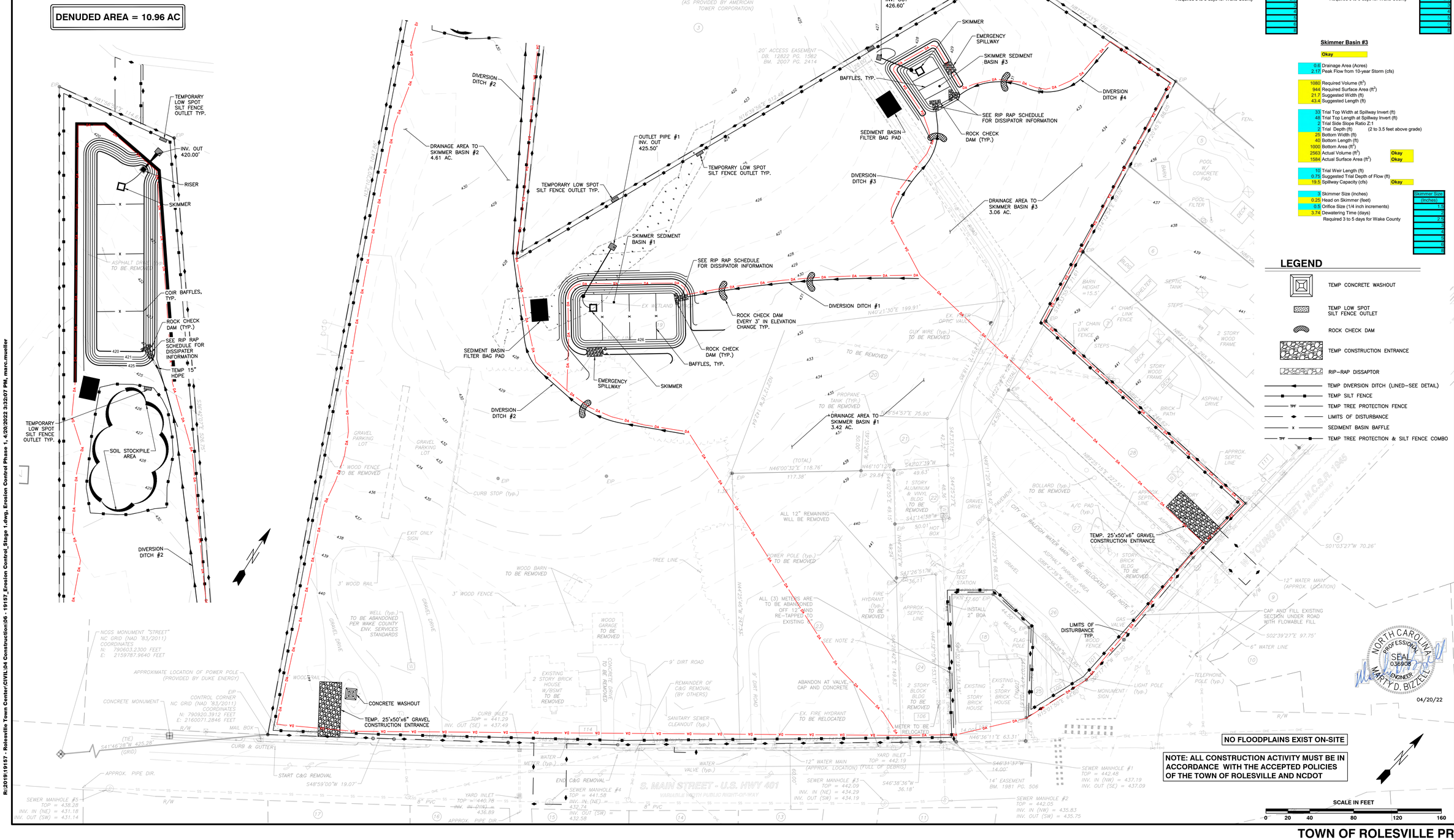

Skimmer Basin #1

Okay

3.42	Drainage Area (Acres)
12.35	Peak Flow from 10-year Storm (cfs)
6156	Required Volume (ft^3)
5372	Required Surface Area (ft^2)
51.8	Suggested Width (ft)
103.7	Suggested Length (ft)
54	Trial Top Width at Spillway Invert (ft)
100	Trial Top Length at Spillway Invert (ft)
2	Trial Side Slope Ratio Z:1
3	Trial Depth (ft) (2 to 3.5 feet above grade)
42	Bottom Width (ft)
88	Bottom Length (ft)
3696	Bottom Area (ft^2)
13572	Actual Volume (ft^3) Okay
5400	Actual Surface Area (ft^2) Okay
10	Trial Weir Length (ft)
1	Suggested Trial Depth of Flow (ft)
30.0	Spillway Capacity (cfs) Okay
4	Skimmer Size (inches)
0.333	Head on Skimmer (feet)
1	Orifice Size (1/4 inch increments)
4.62	Dewatering Time (days)

Required 3 to 5 days for Wake County

Skimmer Size (inches): 1, 2, 2.5, 3, 4, 5, 6, 7, 8

Skimmer Basin #2

Okay

4.61	Drainage Area (Acres)
16.64	Peak Flow from 10-year Storm (cfs)
8298	Required Volume (ft^3)
7238	Required Surface Area (ft^2)
60.2	Suggested Width (ft)
120.3	Suggested Length (ft)
56	Trial Top Width at Spillway Invert (ft)
190	Trial Top Length at Spillway Invert (ft)
2	Trial Side Slope Ratio Z:1
3	Trial Depth (ft) (2 to 3.5 feet above grade)
44	Bottom Width (ft)
178	Bottom Length (ft)
7832	Bottom Area (ft^2)
27636	Actual Volume (ft^3) Okay
10640	Actual Surface Area (ft^2) Okay
25	Trial Weir Length (ft)
0.75	Suggested Trial Depth of Flow (ft)
39.0	Spillway Capacity (cfs) Okay
4	Skimmer Size (inches)
0.333	Head on Skimmer (feet)
1.25	Orifice Size (1/4 inch increments)
3.98	Dewatering Time (days)

Required 3 to 5 days for Wake County

Skimmer Size (inches): 1.5, 2, 2.5, 3, 4, 5, 6, 7, 8

Skimmer Basin #3

Okay

0.6	Drainage Area (Acres)
2.17	Peak Flow from 10-year Storm (cfs)
1080	Required Volume (ft^3)
944	Required Surface Area (ft^2)
21.7	Suggested Width (ft)
43.4	Suggested Length (ft)
33	Trial Top Width at Spillway Invert (ft)
48	Trial Top Length at Spillway Invert (ft)
2	Trial Side Slope Ratio Z:1
2	Trial Depth (ft) (2 to 3.5 feet above grade)
25	Bottom Width (ft)
40	Bottom Length (ft)
1000	Bottom Area (ft^2)
2563	Actual Volume (ft^3) Okay
1584	Actual Surface Area (ft^2) Okay
10	Trial Weir Length (ft)
0.75	Suggested Trial Depth of Flow (ft)
19.5	Spillway Capacity (cfs) Okay
3	Skimmer Size (inches)
0.25	Head on Skimmer (feet)
0.5	Orifice Size (1/4 inch increments)
3.74	Dewatering Time (days)

Required 3 to 5 days for Wake County

Skimmer Size (inches): 1.5, 2, 2.5, 3, 4, 5, 6, 7, 8

LEGEND

- TEMP CONCRETE WASHOUT
- TEMP LOW SPOT SILT FENCE OUTLET
- ROCK CHECK DAM
- TEMP CONSTRUCTION ENTRANCE
- RIP–RAP DISSAPTOR
- TEMP DIVERSION DITCH (LINED–SEE DETAIL)
- TEMP SILT FENCE
- TPF TEMP TREE PROTECTION FENCE
- LIMITS OF DISTURBANCE
- x SEDIMENT BASIN BAFFLE
- TPF TEMP TREE PROTECTION & SILT FENCE COMBO

NORTH CAROLINA PROFESSIONAL SEAL 036905 ENGINEER MARTY D. BIZZELL

04/20/22

BNK

BASS, NIXON & KENNEDY, INC.
CONSULTING ENGINEERS
6310 CHAPEL HILL ROAD, SUITE 250, RALEIGH, NC 27607
TELEPHONE: (919)851-4422 FAX: (919)851-8968
CERTIFICATION NUMBERS: NCBELS (C-0110); NCBOLA (C-0267)

NO.	DATE	DESCRIPTION	BY

REVISIONS

03-19157 | PROGRESS | MRM
JOB NO. | DATE | DRAWN BY

EROSION CONTROL PLAN - STAGE 1

SCALE: 1" = 40' | CHK BY:MDB

COBBLESTONE VILLAGE
MIXED USE DEVELOPMENT
TOWN OF ROLESVILLE, WAKE COUNTY, NORTH CAROLINA

SHEET C3.3

TOWN OF ROLESVILLE PROJECT NO.

CONSTRUCTION SEQUENCE - STAGE 2

1. BEGIN CONSTRUCTION OF ALL BUILDINGS.
2. STABILIZE SITE AS NEW DISTURBED AREAS ARE BROUGHT UP TO FINISH GRADE WITH VEGETATION, PAVING, DITCH LININGS, ETC. SEED AND MULCH DENUDED AREAS PER GROUND STABILIZATION TIME FRAMES.
3. WHEN CONSTRUCTION OF PARKING LOTS ARE COMPLETE AND ALL AREAS ARE STABILIZED COMPLETELY, CALL ENVIRONMENTAL CONSULTANT FOR AN INSPECTION.
4. IF THE SITE IS APPROVED, REMOVE TEMPORARY DIVERSIONS, SILT FENCE, SEDIMENT BASINS, ETC., AND SEED OUT OR STABILIZE ANY RESULTING BARE AREAS. ALL REMAINING PERMANENT EROSION CONTROL DEVICES, SUCH AS VELOCITY DISSIPATORS, SHOULD NOW BE INSTALLED.
5. WHEN VEGETATION HAS BECOME ESTABLISHED, CALL FOR A FINAL SITE INSPECTION BY THE ENVIRONMENTAL CONSULTANT. OBTAIN A CERTIFICATE OF COMPLETION.

NOTE: WAKE COUNTY MUST GRANT PERMISSION TO CONVERT THE SEDIMENT BASIN OVER TO THE STORMWATER USE PRIOR TO COMPLETING ANY RELATED WORK.

TOTAL DISTURBED AREA = 10.96 AC

ENVIRONMENTAL CONSULTANT: JEEVAN NEUPANE (919–819–8907)

REQUIRED WAKE COUNTY BASIN REMOVAL AND/OR CONVERSION SEQUENCE

1. SCHEDULE A SITE MEETING WITH THE ENVIRONMENTAL CONSULTANT TO DETERMINE IF A BASIN CAN BE REMOVED OR CONVERTED TO A PERMANENT STORMWATER POND. INSTALL SILT FENCING OR OTHER TEMPORARY EROSION CONTROL MEASURES AS NEEDED PRIOR TO REMOVAL OF THE BASIN.
2. UTILIZE OUTLET STRUCTURES THAT WITHDRAW WATER FROM THE SEDIMENT BASIN SURFACE FOR DRAW DOWN OF WATER IN BASIN FOR MAINTENANCE OR CLOSE OUT UNLESS INFEASIBLE. SEE REQUIREMENTS OF NCG01 PERMIT PART II, SECTION G, ITEM (4) ENTITLED "DRAW DOWN OF SEDIMENT BASINS FOR MAINTENANCE OR CLOSE OUT" AND REFER TO WAKE COUNTY "FILTER BAG FOR DEWATERING ACTIVITIES" CONSTRUCTION DETAIL.
3. REMOVE BASIN(S) AND ASSOCIATED TEMPORARY DIVERSION DITCHES. IF CULVERT PIPES NEED TO BE EXTENDED, PERFORM THIS OPERATION AT THIS TIME. FINE GRADE AREA IN PREPARATION FOR SEEDING.
4. PERFORM SEEDBED PREPARATION, SEED, MULCH AND ASPHALT TACK ANY RESULTING BARE AREAS IMMEDIATELY.
5. INSTALL VELOCITY DISSIPATORS AND/OR LEVEL SPREADERS AS REQUIRED ON THE EROSION CONTROL PLAN.
6. WHEN SITE IS FULLY STABILIZED, CALL ENVIRONMENTAL CONSULTANT FOR APPROVAL OF REMOVING REMAINING TEMPORARY EROSION CONTROL MEASURES AND ADVICE ON WHEN SITE CAN BE ISSUED A CERTIFICATE OF COMPLETION. NOTE: A MEETING SHOULD ALSO BE SCHEDULED WITH THE ENVIRONMENTAL CONSULTANT TO DETERMINE WHEN A BASIN MAY BE CONVERTED FOR STORMWATER USE. SOME MUNICIPALITIES MAY ALSO REQUIRE THIS.

Skimmer Basin #2

Okay

6.99	Drainage Area (Acres)	
25.23	Peak Flow from 10-year Storm (cfs)	
12582	Required Volume (ft^3)	
10975	Required Surface Area (ft^2)	
74.1	Suggested Width (ft)	
148.2	Suggested Length (ft)	
58	Trial Top Width at Spillway Invert (ft)	
190	Trial Top Length at Spillway Invert (ft)	
2	Trial Side Slope Ratio Z:1	
3	Trial Depth (ft)	(2 to 3.5 feet above grade)
46	Bottom Width (ft)	
178	Bottom Length (ft)	
8188	Bottom Area (ft^2)	
28740	Actual Volume (ft^3)	Okay
11020	Actual Surface Area (ft^2)	Okay
20	Trial Weir Length (ft)	
0.75	Suggested Trial Depth of Flow (ft)	
39.0	Spillway Capacity (cfs)	Okay
4	Skimmer Size (inches)	
0.333	Head on Skimmer (feet)	
1.5	Orifice Size (1/4 inch increments)	
4.20	Dewatering Time (days)	
	Required 3 to 5 days for Wake County	

Skimmer Size (Inches)
1.5
2
2.5
3
4
5
6
8

SEDIMENT BASIN SUMMARY CHART

Sediment Basin Number	1	2
Drainage Area (acres)	1.74	6.99
Q10(cfs)	(0.5)(7.22)(1.74)=6.28	(0.5)(7.22)(6.99)=25.23
Weir Size (ft)	10 x 1.5	10 x 1.5
Surface Area Required (SF)	(435)(6.28)=2,732	(435)(25.23)=10,975
Volume Required (CF)	(1800)(1.74)= 3,132	(1800)(6.99)= 12,582
Dimensions (ft)	see plans	see plans
Surface Area Provided (SF)	2,800	11,000
Volume Provided (CF)	5,646	27,500
Skimmer Size	4"	4
Orifice Radius	0.4"	0.75
Orifice Diameter	0.75"	1.5
Drawdown Time (Days)	4.18	4.2
Number of Baffles	3	3

DITCH/CHANNEL CALCULATIONS

DIVERSION DITCH ID	LENGTH (LF)	DA (Ac)	Q10 (CFS)	SLOPE (%)	V10 (FPS)	LINER *	PERMISSIBLE SHEAR STRESS (PSF)	CALCULATED SHEAR STRESS (PSF)
DV-1	296	1.02	2.34	2.00	2.01	SC150	2.00	0.78
DV-2	495	1.00	2.30	2.60	2.29	SC150	2.00	0.94
DV-3	442	0.52	1.19	1.80	0.92	SC150	1.80	0.29
DV-4	167	0.06	0.13	2.90	0.96	SC150	1.80	0.38

* NAG = NORTH AMERICAN GREEN OR EQUIVALENT

LEGEND

▨	TEMP CONSTRUCTION ENTRANCE
▨	TEMP LOW SPOT SILT FENCE OUTLET
□	TEMP INLET PROTECTION
▨	RIP–RAP DISSAPTOR
—■——■—	TEMP SILT FENCE
—— TPF ——	TEMP TREE PROTECTION FENCE
—— ◆ ——	LIMITS OF DISTURBANCE
—— x ——	SEDIMENT BASIN BAFFLE
—TPF——■—	TEMP TREE PROTECTION & SILT FENCE COMBO

CITY OF RALEIGH - PLANS AUTHORIZED FOR CONSTRUCTION

Electronic Approval: This approval is being issued electronically. This approval is valid only upon the signature of a City of Raleigh Review Officer below. The City will retain a copy of the approved plans. Any work authorized by this approval must proceed in accordance with the plans kept on file with the City. This electronic approval may not be edited once issued. Any modification to this approval once issued will invalidate this approval.

City of Raleigh Development Approval ______________________

Raleigh Water Review Officer

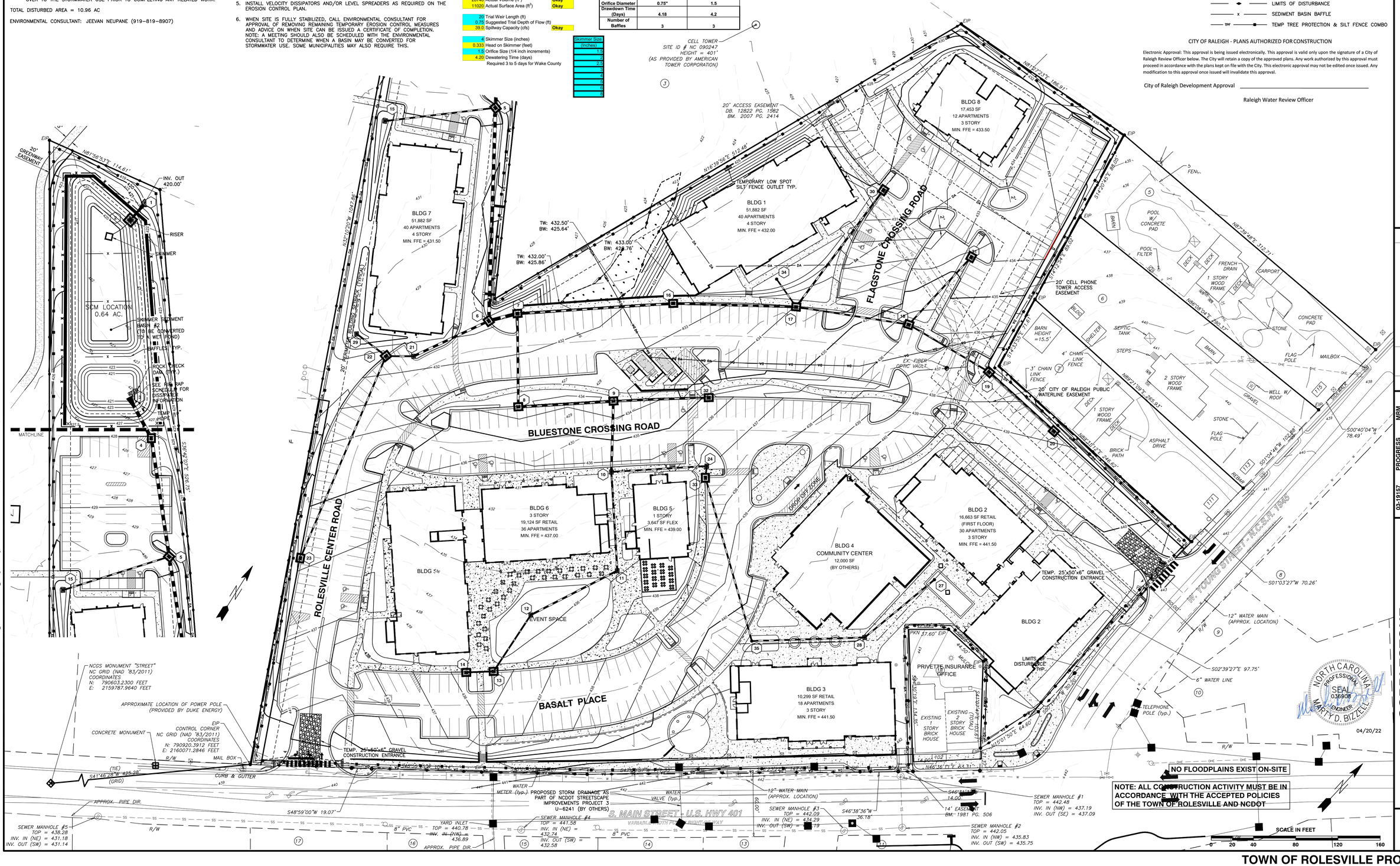

NO FLOODPLAINS EXIST ON-SITE

NOTE: ALL CONSTRUCTION ACTIVITY MUST BE IN ACCORDANCE WITH THE ACCEPTED POLICIES OF THE TOWN OF ROLESVILLE AND NCDOT

SEAL 036908
MARTY D. BIZZELL
04/20/22

R:\2019\19157 - Rolesville Town Center\CIVIL\04 Construction\06 - 19157_Erosion Control_Stage 2.dwg, Erosion Control Phase 2, 4/20/2022 3:32:40 PM, marc.mueller

BNK

BASS, NIXON & KENNEDY, INC.
CONSULTING ENGINEERS
6310 CHAPEL HILL ROAD, SUITE 250, RALEIGH, NC 27607
TELEPHONE: (919)851-4422 FAX: (919)851-8968
CERTIFICATION NUMBERS: NCBELS (C-0110); NCBOLA (C-0267)

NO.	DATE	DESCRIPTION	BY
		REVISIONS	

03-19157	PROGRESS	MRM
JOB NO.	DATE	DRAWN BY

EROSION CONTROL PLAN - STAGE 2

SCALE: 1" = 40'
CHK BY: MDB

COBBLESTONE VILLAGE
MIXED USE DEVELOPMENT
TOWN OF ROLESVILLE, WAKE COUNTY, NORTH CAROLINA

SHEET C3.4

NOT RELEASED FOR CONSTRUCTION OR BID SOLICITATION

TOWN OF ROLESVILLE PROJECT NO.

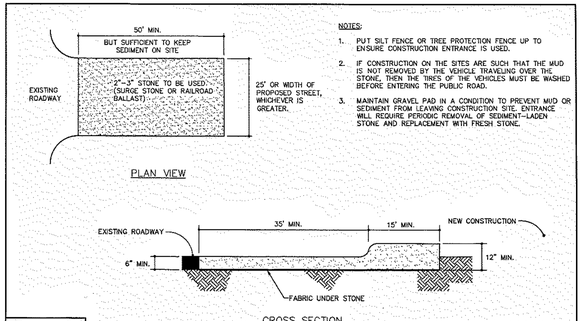

NOTES:

1. PUT SILT FENCE OR TREE PROTECTION FENCE UP TO ENSURE CONSTRUCTION ENTRANCE IS USED.
2. IF CONSTRUCTION ON THE SITES ARE SUCH THAT THE MUD IS NOT REMOVED BY THE VEHICLE TRAVELING OVER THE STONE, THEN THE TIRES OF THE VEHICLES MUST BE WASHED BEFORE ENTERING THE PUBLIC ROAD.
3. MAINTAIN GRAVEL PAD IN A CONDITION TO PREVENT MUD OR SEDIMENT FROM LEAVING CONSTRUCTION SITE. ENTRANCE WILL REQUIRE PERIODIC REMOVAL OF SEDIMENT-LADEN STONE AND REPLACEMENT WITH FRESH STONE.

WAKE COUNTY NORTH CAROLINA

EFFECTIVE: 01/31/08

STANDARD CONSTRUCTION ENTRANCE

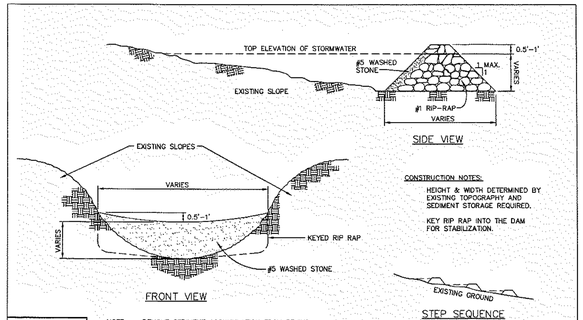

CONSTRUCTION NOTES:

HEIGHT & WIDTH DETERMINED BY EXISTING TOPOGRAPHY AND SEDIMENT STORAGE REQUIRED.

KEY RIP RAP INTO THE DAM FOR STABILIZATION.

NOTE: REMOVE SEDIMENT ACCUMULATION FROM BEHIND CHECK DAMS TO PREVENT DAMAGE TO CHANNEL VEGETATION. FLOW SHOULD BE MAINTAINED THROUGH THE DAM.

WAKE COUNTY NORTH CAROLINA

EFFECTIVE: 01/31/08

STANDARD CHECK DAM

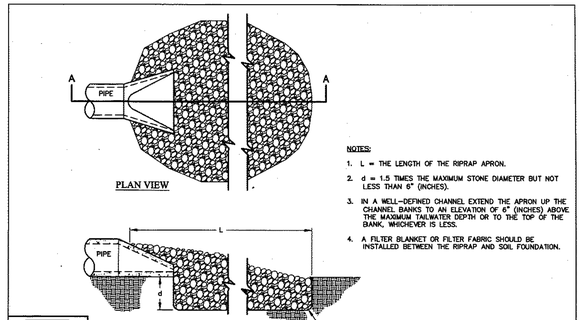

NOTES:

1. L = THE LENGTH OF THE RIPRAP APRON.
2. d = 1.5 TIMES THE MAXIMUM STONE DIAMETER BUT NOT LESS THAN 6" (INCHES).
3. IN A WELL-DEFINED CHANNEL EXTEND THE APRON UP THE CHANNEL BANKS TO AN ELEVATION OF 6" (INCHES) ABOVE THE MAXIMUM TAILWATER DEPTH OR TO THE TOP OF THE BANK, WHICHEVER IS LESS.
4. A FILTER BLANKET OR FILTER FABRIC SHOULD BE INSTALLED BETWEEN THE RIPRAP AND SOIL FOUNDATION.

WAKE COUNTY NORTH CAROLINA

EFFECTIVE: 01/31/08

STANDARD PIPE OUTLET TO WELL-DEFINED CHANNEL

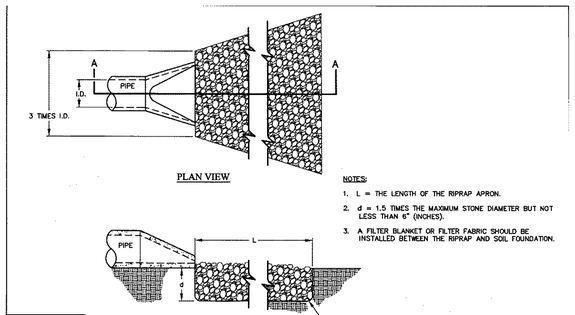

NOTES:

1. L = THE LENGTH OF THE RIPRAP APRON.
2. d = 1.5 TIMES THE MAXIMUM STONE DIAMETER BUT NOT LESS THAN 6" (INCHES).
3. A FILTER BLANKET OR FILTER FABRIC SHOULD BE INSTALLED BETWEEN THE RIPRAP AND SOIL FOUNDATION.

WAKE COUNTY NORTH CAROLINA

EFFECTIVE: 01/31/08

STANDARD PIPE OUTLET TO FLAT AREA NO WELL-DEFINED CHANNEL

NOTES:

1. TEMPORARY DIVERSION DITCH TO BE USED TO INTERCEPT FLOW AND/OR DIVERT TO A SEDIMENT CONTROL MEASURE OR BMP.
2. SILT SHALL BE REMOVED WHEN DITCH IS ONE-HALF FULL.
3. DITCH SHALL BE RECONSTRUCTED WHEN DAMAGED BY EQUIPMENT OR COVERED BY FILL.
4. STABILIZE DIVERSION DITCH BERM WITH TEMPORARY SEEDING, MULCH WITH TAC, AND/OR EROSION CONTROL NETTING.

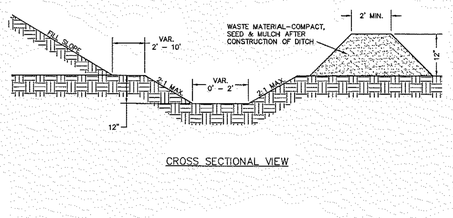

WAKE COUNTY NORTH CAROLINA

EFFECTIVE: 01/31/08

STANDARD TEMPORARY DIVERSION DITCH

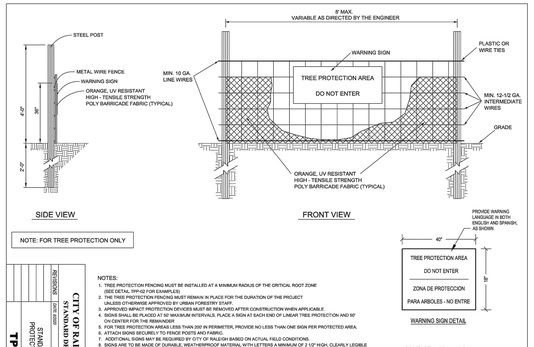

NOTE: FOR TREE PROTECTION ONLY

NOTES:

1. TREE PROTECTION FENCING MUST BE INSTALLED AT A MINIMUM RADIUS OF THE CRITICAL ROOT ZONE (1' RADIUS PER DBH) (SEE FOR EXAMPLES).
2. THE TREE PROTECTION FENCING MUST REMAIN IN PLACE FOR THE DURATION OF THE PROJECT UNLESS OTHERWISE APPROVED BY URBAN FORESTRY STAFF.
3. APPROVED IMPACT PROTECTION DEVICES MUST BE REMOVED AFTER CONSTRUCTION WHEN APPLICABLE.
4. SIGNS SHALL BE PLACED AT 50' MAXIMUM INTERVALS, PLACE A SIGN AT EACH END OF LINEAR TREE PROTECTION AND 50' ON CENTER FOR THE REMAINDER.
5. IF THE PROTECTED AREA MEASURES LESS THAN 200' IN PERIMETER, PROVIDE NO LESS THAN ONE SIGN PER PROTECTED AREA.
6. ATTACH SIGNS SECURELY TO FENCE POSTS AND FABRIC.
7. ADDITIONAL SIGNS MAY BE REQUIRED BY CITY OF RALEIGH BASED ON ACTUAL FIELD CONDITIONS.
8. SIGNS ARE TO BE MADE OF DURABLE, WEATHERPROOF MATERIAL WITH LETTERS A MINIMUM OF 2 1/2" HIGH, CLEARLY LEGIBLE AND SPACED AS SHOWN.

CITY OF RALEIGH
STANDARD DETAIL

REVISION	DATE	STANDARD TREE PROTECTION DETAIL	TPP-01

CONTACT INFORMATION:
CITY OF RALEIGH PARKS, RECREATION AND CULTURAL RESOURCES DEPARTMENT
URBAN FORESTER:
TREES@RALEIGHNC.GOV
WWW.RALEIGHNC.GOV

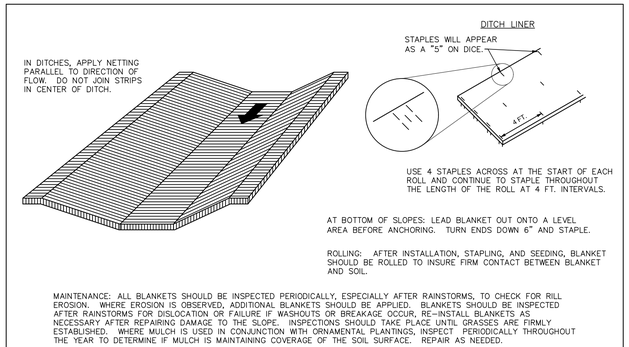

USE 4 STAPLES ACROSS AT THE START OF EACH ROLL AND CONTINUE TO STAPLE THROUGHOUT THE LENGTH OF THE ROLL AT 4 FT. INTERVALS.

AT BOTTOM OF SLOPES: LEAD BLANKET OUT ONTO A LEVEL AREA BEFORE ANCHORING. TURN ENDS DOWN 6" AND STAPLE.

ROLLING: AFTER INSTALLATION, STAPLING, AND SEEDING, BLANKET SHOULD BE ROLLED TO INSURE FIRM CONTACT BETWEEN BLANKET AND SOIL.

MAINTENANCE: ALL BLANKETS SHOULD BE INSPECTED PERIODICALLY, ESPECIALLY AFTER RAINSTORMS, TO CHECK FOR RILL EROSION. WHERE EROSION IS OBSERVED, ADDITIONAL BLANKETS SHOULD BE APPLIED. BLANKETS SHOULD BE INSPECTED AFTER RAINSTORMS FOR DISLOCATION OR FAILURE IF WASHOUTS OR BREAKAGE OCCUR, RE-INSTALL BLANKETS AS NECESSARY AFTER REPAIRING DAMAGE TO THE SLOPE. INSPECTIONS SHOULD TAKE PLACE UNTIL GRASSES ARE FIRMLY ESTABLISHED. WHERE MULCH IS USED IN CONJUNCTION WITH ORNAMENTAL PLANTINGS, INSPECT PERIODICALLY THROUGHOUT THE YEAR TO DETERMINE IF MULCH IS MAINTAINING COVERAGE OF THE SOIL SURFACE. REPAIR AS NEEDED.

STABILIZING CHANNEL WITH EXCELSIOR BLANKET

SCALE: NTS

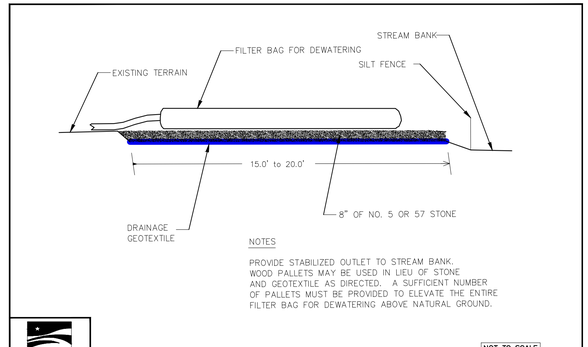

NOTES

PROVIDE STABILIZED OUTLET TO STREAM BANK. WOOD PALLETS MAY BE USED IN LIEU OF STONE AND GEOTEXTILE AS DIRECTED. A SUFFICIENT NUMBER OF PALLETS MUST BE PROVIDED TO ELEVATE THE ENTIRE FILTER BAG FOR DEWATERING ABOVE NATURAL GROUND.

NOT TO SCALE

WAKE COUNTY NORTH CAROLINA

EFFECTIVE: 01/31/08

STANDARD FILTER BAG FOR DEWATERING ACTIVITIES

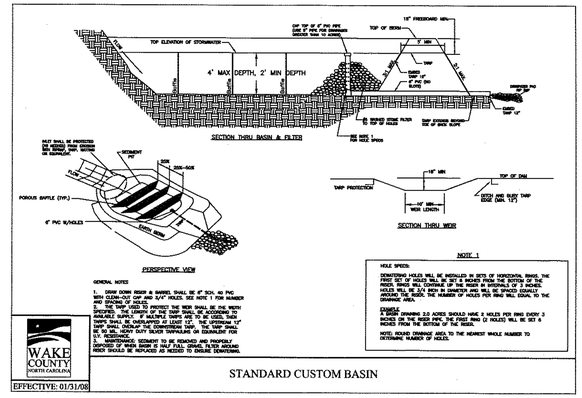

STANDARD CUSTOM BASIN

CITY OF RALEIGH - PLANS AUTHORIZED FOR CONSTRUCTION

Electronic Approval: This approval is being issued electronically. This approval is valid only upon the signature of a City of Raleigh Review Officer below. The City will retain a copy of the approved plans. Any work authorized by this approval must proceed in accordance with the plans kept on file with the City. This electronic approval may not be edited once issued. Any modification to this approval once issued will invalidate this approval.

City of Raleigh Development Approval _____

Raleigh Water Review Officer

NORTH CAROLINA PROFESSIONAL SEAL 036908 ENGINEER MARTY D. BIZZELL

04/20/22

BNK

BASS, NIXON & KENNEDY, INC.
CONSULTING ENGINEERS
6310 CHAPEL HILL ROAD, SUITE 250, RALEIGH, NC 27607
TELEPHONE: (919)851-4422 FAX: (919)851-8968
CERTIFICATION NUMBERS: NCBELS (C-0110); NCBOLA (C-0267)

NO.	DATE	DESCRIPTION	BY
		REVISIONS	

03-19157 PROGRESS MRM
JOB NO. DATE DRAWN BY

EROSION CONTROL DETAILS

SCALE: N.T.S. CHK BY:MDB

COBBLESTONE VILLAGE
MIXED USE DEVELOPMENT
TOWN OF ROLESVILLE, WAKE COUNTY, NORTH CAROLINA

SHEET C3.5

TOWN OF ROLESVILLE PROJECT NO.

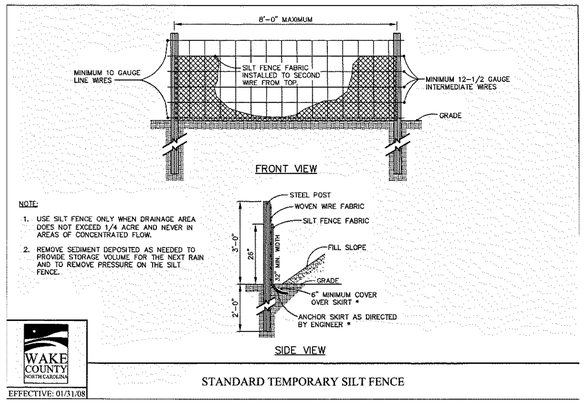

NOTE:
1. USE SILT FENCE ONLY WHEN DRAINAGE AREA DOES NOT EXCEED 1/4 ACRE AND NEVER IN AREAS OF CONCENTRATED FLOW.
2. REMOVE SEDIMENT DEPOSITED AS NEEDED TO PROVIDE STORAGE VOLUME FOR THE NEXT RAIN AND TO REMOVE PRESSURE ON THE SILT FENCE.

WAKE COUNTY NORTH CAROLINA
EFFECTIVE: 01/31/08

STANDARD TEMPORARY SILT FENCE

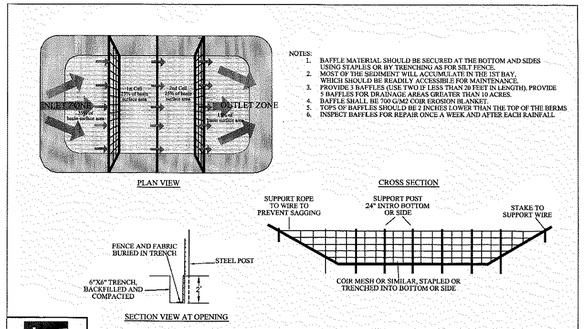

NOTES:
1. BAFFLE MATERIAL SHOULD BE SECURED AT THE BOTTOM AND SIDES USING STAPLES OR BY TRENCHING AS FOR SILT FENCE.
2. MOST OF THE SEDIMENT WILL ACCUMULATE IN THE FIRST BAY, WHICH SHOULD BE READILY ACCESSIBLE FOR MAINTENANCE.
3. PROVIDE 3 BAFFLES (USE TWO IF LESS THAN 20 FEET IN LENGTH). PROVIDE 5 BAFFLES FOR DRAINAGE AREAS GREATER THAN 10 ACRES.
4. BAFFLE SHALL BE TAO-GM2 COIR EROSION BLANKET.
5. TOPS OF BAFFLES SHOULD BE 2 INCHES LOWER THAN THE TOP OF THE BERMS.
6. INSPECT BAFFLES FOR REPAIR ONCE A WEEK AND AFTER EACH RAINFALL.

WAKE COUNTY NORTH CAROLINA
EFFECTIVE: 01/31/08

STANDARD BAFFLES DETAIL

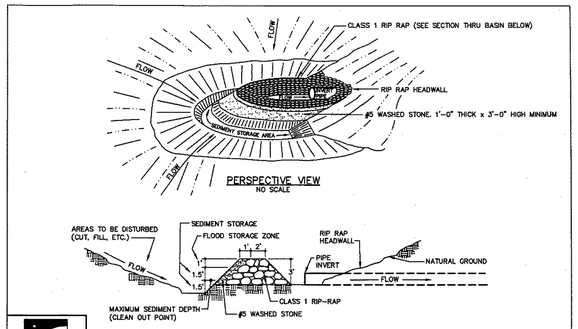

WAKE COUNTY NORTH CAROLINA
EFFECTIVE: 01/31/08

STANDARD HORSESHOE INLET PROTECTION

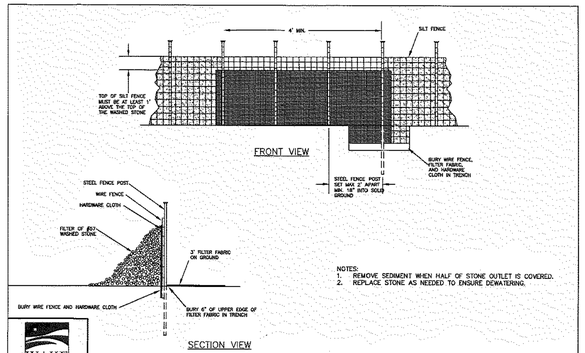

NOTES:
1. REMOVE SEDIMENT WHEN HALF OF STONE OUTLET IS COVERED.
2. REPLACE STONE AS NEEDED TO ENSURE DEWATERING.

WAKE COUNTY NORTH CAROLINA
EFFECTIVE: 01/31/08

STANDARD SILT FENCE OUTLET

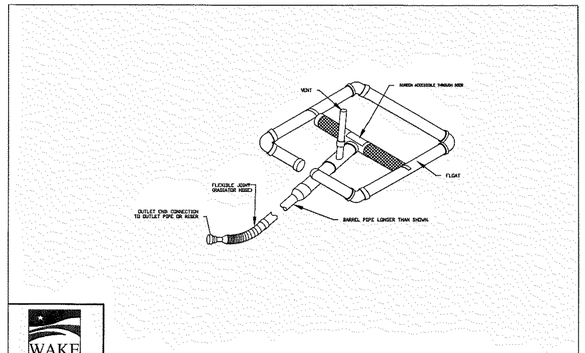

WAKE COUNTY NORTH CAROLINA
EFFECTIVE: 01/31/08

STANDARD SKIMMER DETAIL

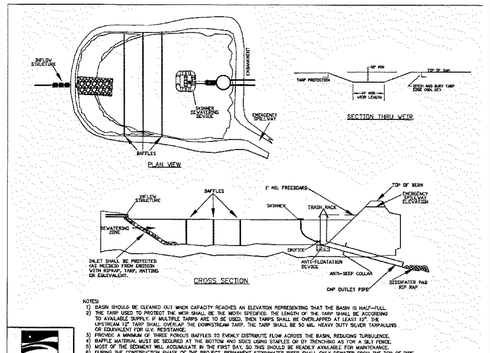

NOTES:
1) BASIN SHOULD BE CLEANED OUT WHEN CAPACITY REACHES AN ELEVATION REPRESENTING THAT THE BASIN IS HALF-FULL.
2) THE TARP USED TO PROTECT THE WEIR SHALL BE THE WIDTH SPECIFIED. THE LENGTH OF THE TARP SHALL BE ACCORDING TO AVAILABLE SUPPLY. IF MULTIPLE TARPS ARE TO BE USED, THEN TARPS SHALL BE OVERLAPPED AT LEAST 12". THE UPSTREAM 12" TARP SHALL OVERLAP THE DOWNSTREAM TARP. THE TARP SHALL BE 50 MIL. HEAVY DUTY SILVER TARPAULINS OR EQUIVALENT. TARP SHALL OVERLAP THE DOWNSTREAM TARP. THE TARP SHALL BE 50 MIL. HEAVY DUTY SILVER TARPAULINS OR EQUIVALENT. TARP SHALL OVERLAP
3) PROVIDE A MINIMUM OF THREE POROUS BAFFLES TO EVENLY DISTRIBUTE FLOW ACROSS THE BASIN, REDUCING TURBULENCE.
4) BAFFLE MATERIAL MUST BE SECURED AT THE BOTTOM AND SIDES USING STAPLES OR BY TRENCHING AS FOR A SILT FENCE.
5) MOST OF THE SEDIMENT WILL ACCUMULATE IN THE FIRST BAY, SO THIS SHOULD BE READILY AVAILABLE FOR MAINTENANCE.
6) DURING THE CONSTRUCTION PHASE OF THE PROJECT, PERMANENT STORMWATER RISER SHALL ONLY DEWATER FROM THE TOP OF PIPE.
7) POND SHALL NOT BE CONVERTED FOR STORMWATER USE UNTIL APPROVED BY ENVIRONMENTAL ENGINEER.

WAKE COUNTY NORTH CAROLINA
EFFECTIVE: 01/31/08

STANDARD SKIMMER ATTACHED TO PERMANENT RISER

SEEDING INFORMATION:

SEEDBED PREPARATION

1. CHISEL COMPACTED AREAS AND SPREAD TOPSOIL 3 INCHES DEEP OVER ADVERSE SOIL CONDITIONS, IF AVAILABLE.
2. RIP THE ENTIRE AREA TO 6 INCHES DEPTH.
3. REMOVE ALL LOOSE ROCK, ROOTS, AND OTHER OBSTRUCTIONS LEAVING SURFACE REASONABLY SMOOTH AND UNIFORM.
4. APPLY AGRICULTURAL LIME, FERTILIZER, AND SUPER PHOSPHATE UNIFORMLY AND MIX WITH SOIL (SEE BELOW*).
5. CONTINUE TILLAGE UNTIL A WELL PULVERIZED FIRM, REASONABLY UNIFORM SEEDBED IS PREPARED 4 TO 6 INCHES DEEP.
6. SEED ON A FRESHLY PREPARED SEEDBED AND COVER LIGHTLY WITH SEEDING EQUIPMENT OR CULTIPACK AFTER SEEDING.
7. MULCH IMMEDIATELY AFTER SEEDING AND ANCHOR MULCH.
8. INSPECT ALL SEEDED AREAS AND MAKE NECESSARY REPAIRS OR RESEEDINGS WITHIN THE PLANTING SEASON, IF POSSIBLE. IF STAND SHOULD BE OVER 6INS DAMAGED, REESTABLISH FOLLOWING ORIGINAL LIME, FERTILIZER AND SEEDING RATES.
9. CONSULT CONSERVATION INSPECTOR ON MAINTENANCE TREATMENT AND FERTILIZATION AFTER PERMANENT COVER IS ESTABLISHED.

* APPLY: AGRICULTURAL LIMESTONE – 2 TONS/ACRE
FERTILIZER – 10–10–10 ANALYSIS AT 800–1,000 LBS./ACRE.
SUPER PHOSPHATE – 500 LBS.ORE OF 20% ANALYSIS SUPER PHOSPHATE
MULCH – 2 TONS (APPROX. 80 BALES) SMALL SMALL GRAIN STRAW/ACRE
ANCHOR –TACK WITH LIQUID ASPHALT AT 400 GAL./ACRE OR EMULSIFIED ASPHALT AT 300 GALLONS/ACRE

SEEDING SCHEDULE

PERMANENT SEEDING – SHOULDERS, SIDE DITCHES, SLOPES (MAX. 3:1)

DATE	TYPE	PLANTING RATE
AUG. 15 – NOV. 1	TALL FESCUE	200 LBS./ACRE
NOV. 1 – MAR.1	TALL FESCUE	200 LBS./ACRE
	AND ABRUZZI RYE *(NURSE CROP)	25 LBS./ACRE
MAR. 1 – APR. 15	TALL FESCUE	200 LBS./ACRE
APR. 15 – JUN. 30	HULLED COMMON BERMUDAGRASS	15 LBS./ACRE

PERMANENT SEEDING – SLOPES (3:1 TO 2:1)

AUG. 15–NOV.1	TALL FESCUE	200 LBS/ACRE
	AND SERICEA LESPEDEZA (UNHULLED, UNSCARIFIED)	60 TO 70 LBS/ACRE
NOV. 1–MAR.1	TALL FESCUE	200 LBS/ACRE
	AND SERICEA LESPEDEZA (UNHULLED, UNSCARIFIED)	60 TO 70 LBS/ACRE
	AND ABRUZZI RYE	25 LBS/ACRE
MAR. 1–JUNE 1	TALL FESCUE	200 LBS/ACRE
	AND SERICEA LESPEDEZA (SCARIFIED)	40 TO 50 LBS/ACRE
MAR. 15–JUNE 30	WEEPING LOVEGRASS	10 LBS/ACRE
	AND SERICEA LESPEDEZA (SCARIFIED)	40 TO 50 LBS/ACRE
MAR. 15–JUNE 30	HULLED COMMON BERMUDAGRASS	15 LBS/ACRE
	AND SERICEA LESPEDEZA (SCARIFIED)	40 TO 50 LBS/ACRE

TEMPORARY SEEDING

JUNE 1–SEPT. 1	TALL FESCUE	200 LBS/ACRE
	AND BROWNTOP MILLET *(NURSE CROP)	35 LBS/ACRE
	OR SORGHUM–SUDAN HYBRIDS *(NURSE CROP)	30 LBS/ACRE

CONSULT CONSERVATION ENGINEER OR SOIL CONSERVATION SERVICE FOR ADDITIONAL INFORMATION CONCERNING OTHER ALTERNATIVES FOR VEGETATION OF DENUDED AREAS. THE ABOVE VEGETATION RATES ARE THOSE WHICH DO WELL UNDER LOCAL CONDITIONS; OTHER SEEDING RATE COMBINATIONS ARE POSSIBLE.

*NURSE CROP/TEMPORARY–RESEED ACCORDING TO OPTIMUM SEASON FOR DESIRED PERMANENT VEGETATION. DO NOT ALLOW TEMPORARY COVER TO GROW OVER 12" IN HEIGHT BEFORE MOWING, OTHERWISE FESCUE MAY BE SHADED OUT.

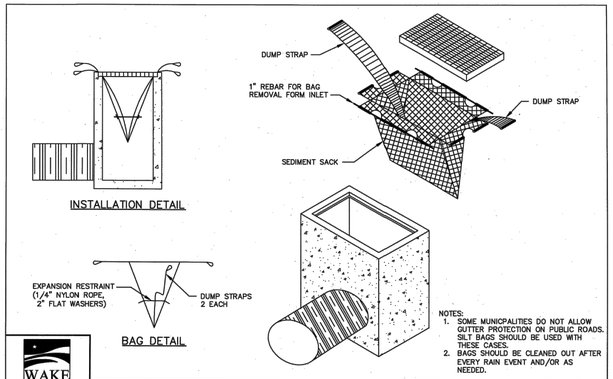

NOTES:
1. SOME MUNICPALITIES DO NOT ALLOW GUTTER PROTECTION ON PUBLIC ROADS. SILT BAGS SHOULD BE USED WITH THESE CAGES.
2. BAGS SHOULD BE CLEANED OUT AFTER EVERY RAIN EVENT AND/OR AS NEEDED.

WAKE COUNTY NORTH CAROLINA
EFFECTIVE: 01/31/08

STANDARD SILT BAG - INLET SEDIMENT CONTROL DEVICE

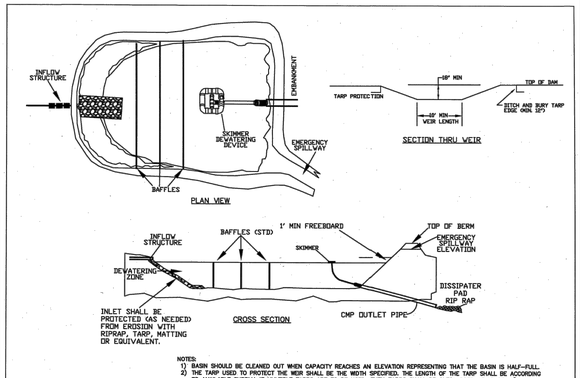

NOTES:
1) BASIN SHOULD BE CLEANED OUT WHEN CAPACITY REACHES AN ELEVATION REPRESENTING THAT THE BASIN IS HALF-FULL.
2) THE TARP USED TO PROTECT THE WEIR SHALL BE THE WIDTH SPECIFIED. THE LENGTH OF THE TARP SHALL BE ACCORDING TO AVAILABLE SUPPLY. IF MULTIPLE TARPS ARE TO BE USED, THEN TARPS SHALL BE OVERLAPPED AT LEAST 12". THE UPSTREAM 12" TARP SHALL OVERLAP THE DOWNSTREAM TARP. THE TARP SHALL BE 50 MIL. HEAVY DUTY SILVER TARPAULINS OR EQUIVALENT. TARP SHALL OVERLAP
3) PROVIDE A MINIMUM OF THREE POROUS BAFFLES TO EVENLY DISTRIBUTE FLOW ACROSS THE BASIN, REDUCING TURBULENCE.
4) BAFFLE MATERIAL MUST BE SECURED AT THE BOTTOM AND SIDES USING STAPLES OR BY TRENCHING AS FOR A SILT FENCE.
5) MOST OF THE SEDIMENT WILL ACCUMULATE IN THE FIRST BAY, SO THIS SHOULD BE READILY AVAILABLE FOR MAINTENANCE.
6) DURING THE CONSTRUCTION PHASE OF THE PROJECT, PERMANENT STORMWATER RISER SHALL ONLY DEWATER FROM THE TOP OF PIPE.
7) POND SHALL NOT BE CONVERTED FOR STORMWATER USE UNTIL APPROVED BY ENVIRONMENTAL ENGINEER.

WAKE COUNTY NORTH CAROLINA
EFFECTIVE: 01/31/08

STANDARD SKIMMER BASIN

CITY OF RALEIGH - PLANS AUTHORIZED FOR CONSTRUCTION

Electronic Approval: This approval is being issued electronically. This approval is valid only upon the signature of a City of Raleigh Review Officer below. The City will retain a copy of the approved plans. Any work authorized by this approval must proceed in accordance with the plans kept on file with the City. This electronic approval may not be edited once issued. Any modification to this approval once issued will invalidate this approval.

City of Raleigh Development Approval _____

Raleigh Water Review Officer

NORTH CAROLINA PROFESSIONAL SEAL 036808 ENGINEER MARTY D. BIZZELL

04/20/22

BNK

BASS, NIXON & KENNEDY, INC.
CONSULTING ENGINEERS
6310 CHAPEL HILL ROAD, SUITE 250, RALEIGH, NC 27607
TELEPHONE: (919)851-4422 FAX: (919)851-8968
CERTIFICATION NUMBERS: NCBELS (C-0110); NCBOLA (C-0267)

NO.	DATE	DESCRIPTION	BY
		REVISIONS	

PROGRESS MRM
DATE DRAWN BY
JOB NO. 03-19157
SCALE: N.T.S. CHK BY: MDB

EROSION CONTROL DETAILS

COBBLESTONE VILLAGE
MIXED USE DEVELOPMENT
TOWN OF ROLESVILLE, WAKE COUNTY, NORTH CAROLINA

SHEET C3.6

TOWN OF ROLESVILLE PROJECT NO.

GROUND STABILIZATION AND MATERIALS HANDLING PRACTICES FOR COMPLIANCE WITH THE NCG01 CONSTRUCTION GENERAL PERMIT

Implementing the details and specifications on this plan sheet will result in the construction activity being considered compliant with the Ground Stabilization and Materials Handling sections of the NCG01 Construction General Permit (Sections E and F, respectively). The permittee shall comply with the Erosion and Sediment Control plan approved by the delegated authority having jurisdiction. All details and specifications shown on this sheet may not apply depending on site conditions and the delegated authority having jurisdiction.

Temporary and Permanent Groundcover*

STABILIZATION TIMEFRAMES
(Effective Aug 3, 2011)

Site Area Description	Stabilization	Timeframe Exceptions
Perimeter dikes, swales, ditches, slopes	7 days	None
High Quality Water (HQW) Zones	7 days	None
Slopes steeper than 3:1	7 days	If slopes are 10' or less in length and are not steeper than 2:1, 14 days are allowed.
Slopes 3:1 or flatter	14 days	7 days for slopes greater than 50' in length.
All other areas with slopes flatter than 4:1	14 days	None, except for perimeters and HQW Zones.

*-For Falls Lake watershed, in disturbed areas where grading activities are incomplete, provide temporary groundcover no later than seven (7) days for slopes steeper than 3:1; ten (10) days for slopes equal to or flatter than 3:1; fourteen (14) days for areas with no slope.

GROUND STABILIZATION SPECIFICATION

Stabilize the ground sufficiently so that rain will not dislodge the soil. Use one of the techniques in the table below:

Temporary Stabilization	Permanent Stabilization
• Temporary grass seed covered with straw or other mulches and tackifiers • Hydroseeding • Rolled erosion control products with or without temporary grass seed • Appropriately applied straw or other mulch • Plastic sheeting	• Permanent grass seed covered with straw or other mulches and tackifiers • Geotextile fabrics such as permanent soil reinforcement matting • Hydroseeding • Shrubs or other permanent plantings covered with mulch • Uniform and evenly distributed ground cover sufficient to restrain erosion • Structural methods such as concrete, asphalt or retaining walls

POLYACRYLAMIDES (PAMS) AND FLOCCULANTS

1. Select flocculants that are appropriate for the soils being exposed during construction, selecting from the *NC DWR List of Approved PAMS/Flocculants*.
2. Apply flocculants at or before the inlets to Erosion and Sediment Control Measures.
3. Apply flocculants at the concentrations specified in the *NC DWR List of Approved PAMS/Flocculants* and in accordance with the manufacturer's instructions.
4. Provide ponding area for containment of treated Stormwater before discharging offsite.
5. Store flocculants in leak-proof containers that are kept under storm-resistant cover or surrounded by secondary containment structures.

NORTH CAROLINA *Environmental Quality*

EQUIPMENT AND VEHICLE MAINTENANCE

1. Maintain vehicles and equipment to prevent discharge of fluids.
2. Provide drip pans under any stored equipment.
3. Identify leaks and repair as soon as feasible, or remove leaking equipment from the project.
4. Collect all spent fluids, store in separate containers and properly dispose as hazardous waste (recycle when possible).
5. Remove leaking vehicles and construction equipment from service until the problem has been corrected.
6. Bring used fuels, lubricants, coolants, hydraulic fluids and other petroleum products to a recycling or disposal center that handles these materials.

LITTER, BUILDING MATERIAL AND LAND CLEARING WASTE

1. Never bury or burn waste. Place litter and debris in approved waste containers.
2. Provide a sufficient number of waste containers on site to manage the quantity of waste produced.
3. Locate waste containers at least 50 feet away from storm drain inlets and surface waters unless no other alternatives are reasonably available.
4. Locate waste containers on areas that do not receive substantial amounts of runoff from upland areas and does not drain directly to a storm drain, stream or wetland.
5. Cover waste containers at the end of each workday and before storm events. Repair or replace damaged waste containers.
6. Anchor all lightweight items in waste containers during times of high winds.
7. Empty waste containers as needed to prevent overflow.
8. Dispose waste off-site at an approved disposal facility.

PAINT AND OTHER LIQUID WASTE

1. Do not dump paint and other liquid waste into storm drains, streams or wetlands.
2. Locate paint washouts at least 50 feet away from storm drain inlets and surface waters unless no other alternatives are reasonably available.
3. Contain liquid wastes in a controlled area.
4. Containment must be labeled, sized and placed appropriately for the needs of site.
5. Prevent the discharge of soaps, solvents, detergents and other liquid wastes from construction sites.

PORTABLE TOILETS

1. Install portable toilets on level ground, at least 50 feet away from storm drains, streams or wetlands unless there is no alternative reasonably available. If 50 foot offset is not attainable, provide relocation of portable toilet behind silt fence or place on a gravel pad and surround with sand bags.
2. Provide staking or anchoring of portable toilets during periods of high winds or in high foot traffic areas.
3. Monitor portable toilets for leaking and properly dispose of any leaked material. Utilize a licensed sanitary waste hauler to remove leaking portable toilets and replace with properly operating unit.

EARTHEN STOCKPILE MANAGEMENT

1. Show stockpile locations on plans. Locate earthen-material stockpile areas at least 50 feet away from storm drain inlets, sediment basins, perimeter sediment controls and surface waters unless it can be shown no other alternatives are reasonably available.
2. Protect stockpile with silt fence installed along toe of slope with a minimum offset of five feet from the toe of stockpile.
3. Provide stable stone access point when feasible.
4. Stabilize stockpile within the timeframes provided on this sheet and in accordance with the approved plan and any additional requirements. Soil stabilization is defined as vegetative, physical or chemical coverage techniques that will restrain accelerated erosion on disturbed soils for temporary or permanent control needs.

ONSITE CONCRETE WASHOUT
STRUCTURE WITH LINER

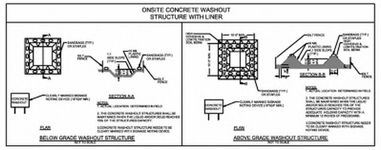

CONCRETE WASHOUTS

1. Do not discharge concrete or cement slurry from the site.
2. Dispose of, or recycle settled, hardened concrete residue in accordance with local and state solid waste regulations and at an approved facility.
3. Manage washout from mortar mixers in accordance with the above item and in addition place the mixer and associated materials on impervious barrier and within lot perimeter silt fence.
4. Install temporary concrete washouts per local requirements, where applicable. If an alternate method or product is to be used, contact your approval authority for review and approval. If local standard details are not available, use one of the two types of temporary concrete washouts provided on this detail.
5. Do not use concrete washouts for dewatering or storing defective curb or sidewalk sections. Stormwater accumulated within the washout may not be pumped into or discharged to the storm drain system or receiving surface waters. Liquid waste must be pumped out and removed from project.
6. Locate washouts at least 50 feet from storm drain inlets and surface waters unless it can be shown that no other alternatives are reasonably available. At a minimum, install protection of storm drain inlet(s) closest to the washout which could receive spills or overflow.
7. Locate washouts in an easily accessible area, on level ground and install a stone entrance pad in front of the washout. Additional controls may be required by the approving authority.
8. Install at least one sign directing concrete trucks to the washout within the project limits. Post signage on the washout itself to identify this location.
9. Remove leavings from the washout when at approximately 75% capacity to limit overflow events. Replace the tarp, sand bags or other temporary structural components when no longer functional. When utilizing alternative or proprietary products, follow manufacturer's instructions.
10. At the completion of the concrete work, remove remaining leavings and dispose of in an approved disposal facility. Fill pit, if applicable, and stabilize any disturbance caused by removal of washout.

HERBICIDES, PESTICIDES AND RODENTICIDES

1. Store and apply herbicides, pesticides and rodenticides in accordance with label restrictions.
2. Store herbicides, pesticides and rodenticides in their original containers with the label, which lists directions for use, ingredients and first aid steps in case of accidental poisoning.
3. Do not store herbicides, pesticides and rodenticides in areas where flooding is possible or where they may spill or leak into wells, stormwater drains, ground water or surface water. If a spill occurs, clean area immediately.
4. Do not stockpile these materials onsite.

HAZARDOUS AND TOXIC WASTE

1. Create designated hazardous waste collection areas on-site.
2. Place hazardous waste containers under cover or in secondary containment.
3. Do not store hazardous chemicals, drums or bagged materials directly on the ground.

NCG01 GROUND STABILIZATION AND MATERIALS HANDLING

EFFECTIVE: 03/01/19

PART III
SELF-INSPECTION, RECORDKEEPING AND REPORTING

SECTION A: SELF-INSPECTION

Self-inspections are required during normal business hours in accordance with the table below. When adverse weather or site conditions would cause the safety of the inspection personnel to be in jeopardy, the inspection may be delayed until the next business day on which it is safe to perform the inspection. In addition, when a storm event of equal to or greater than 1.0 inch occurs outside of normal business hours, the self-inspection shall be performed upon the commencement of the next business day. Any time when inspections were delayed shall be noted in the Inspection Record.

Inspect	Frequency (during normal business hours)	Inspection records must include:
(1) Rain gauge maintained in good working order	Daily	Daily rainfall amounts. If no daily rain gauge observations are made during weekend or holiday periods, and no individual-day rainfall information is available, record the cumulative rain measurement for those un-attended days (and this will determine if a site inspection is needed). Days on which no rainfall occurred shall be recorded as "zero." The permittee may use another rain-monitoring device approved by the Division.
(2) E&SC Measures	At least once per 7 calendar days and within 24 hours of a rain event ≥ 1.0 inch in 24 hours	1. Identification of the measures inspected, 2. Date and time of the inspection, 3. Name of the person performing the inspection, 4. Indication of whether the measures were operating properly, 5. Description of maintenance needs for the measure, 6. Description, evidence, and date of corrective actions taken.
(3) Stormwater discharge outfalls (SDOs)	At least once per 7 calendar days and within 24 hours of a rain event ≥ 1.0 inch in 24 hours	1. Identification of the discharge outfalls inspected, 2. Date and time of the inspection, 3. Name of the person performing the inspection, 4. Evidence of indicators of stormwater pollution such as oil sheen, floating or suspended solids or discoloration, 5. Indication of visible sediment leaving the site, 6. Description, evidence, and date of corrective actions taken.
(4) Perimeter of site	At least once per 7 calendar days and within 24 hours of a rain event ≥ 1.0 inch in 24 hours	If visible sedimentation is found outside site limits, then a record of the following shall be made: 1. Actions taken to clean up or stabilize the sediment that has left the site limits, 2. Description, evidence, and date of corrective actions taken, and 3. An explanation as to the actions taken to control future releases.
(5) Streams or wetlands onsite or offsite (where accessible)	At least once per 7 calendar days and within 24 hours of a rain event ≥ 1.0 inch in 24 hours	If the stream or wetland has increased visible sedimentation or a stream has visible increased turbidity from the construction activity, then a record of the following shall be made: 1. Description, evidence and date of corrective actions taken, and 2. Records of the required reports to the appropriate Division Regional Office per Part III, Section C, Item (2)(a) of this permit.
(6) Ground stabilization measures	After each phase of grading	1. The phase of grading (installation of perimeter E&SC measures, clearing and grubbing, installation of storm drainage facilities, completion of all land-disturbing activity, construction or redevelopment, permanent ground cover). 2. Documentation that the required ground stabilization measures have been provided within the required timeframe or an assurance that they will be provided as soon as possible.

NOTE: The rain inspection resets the required 7 calendar day inspection requirement.

PART III
SELF-INSPECTION, RECORDKEEPING AND REPORTING

SECTION B: RECORDKEEPING

1. E&SC Plan Documentation

The approved E&SC plan as well as any approved deviation shall be kept on the site. The approved E&SC plan must be kept up-to-date throughout the coverage under this permit. The following items pertaining to the E&SC plan shall be kept on site and available for inspection at all times during normal business hours.

Item to Document	Documentation Requirements
(a) Each E&SC measure has been installed and does not significantly deviate from the locations, dimensions and relative elevations shown on the approved E&SC plan.	Initial and date each E&SC measure on a copy of the approved E&SC plan or complete, date and sign an inspection report that lists each E&SC measure shown on the approved E&SC plan. This documentation is required upon the initial installation of the E&SC measures or if the E&SC measures are modified after initial installation.
(b) A phase of grading has been completed.	Initial and date a copy of the approved E&SC plan or complete, date and sign an inspection report to indicate completion of the construction phase.
(c) Ground cover is located and installed in accordance with the approved E&SC plan.	Initial and date a copy of the approved E&SC plan or complete, date and sign an inspection report to indicate compliance with approved ground cover specifications.
(d) The maintenance and repair requirements for all E&SC measures have been performed.	Complete, date and sign an inspection report.
(e) Corrective actions have been taken to E&SC measures.	Initial and date a copy of the approved E&SC plan or complete, date and sign an inspection report to indicate the completion of the corrective action.

2. Additional Documentation to be Kept on Site

In addition to the E&SC plan documents above, the following items shall be kept on the site and available for inspectors at all times during normal business hours, unless the Division provides a site-specific exemption based on unique site conditions that make this requirement not practical:

(a) This General Permit as well as the Certificate of Coverage, after it is received.

(b) Records of inspections made during the previous twelve months. The permittee shall record the required observations on the Inspection Record Form provided by the Division or a similar inspection form that includes all the required elements. Use of electronically-available records in lieu of the required paper copies will be allowed if shown to provide equal access and utility as the hard-copy records.

3. Documentation to be Retained for Three Years

All data used to complete the e-NOI and all inspection records shall be maintained for a period of three years after project completion and made available upon request. [40 CFR 122.41]

PART III
SELF-INSPECTION, RECORDKEEPING AND REPORTING

SECTION C: REPORTING

1. Occurrences that Must be Reported

Permittees shall report the following occurrences:

(a) Visible sediment deposition in a stream or wetland.

(b) Oil spills if:
- They are 25 gallons or more,
- They are less than 25 gallons but cannot be cleaned up within 24 hours,
- They cause sheen on surface waters (regardless of volume), or
- They are within 100 feet of surface waters (regardless of volume).

(c) Releases of hazardous substances in excess of reportable quantities under Section 311 of the Clean Water Act (Ref: 40 CFR 110.3 and 40 CFR 117.3) or Section 102 of CERCLA (Ref: 40 CFR 302.4) or G.S. 143-215.85.

(d) Anticipated bypasses and unanticipated bypasses.

(e) Noncompliance with the conditions of this permit that may endanger health or the environment.

2. Reporting Timeframes and Other Requirements

After a permittee becomes aware of an occurrence that must be reported, he shall contact the appropriate Division regional office within the timeframes and in accordance with the other requirements listed below. Occurrences outside normal business hours may also be reported to the Department's Environmental Emergency Center personnel at (800) 858-0368.

Occurrence	Reporting Timeframes (After Discovery) and Other Requirements
(a) Visible sediment deposition in a stream or wetland	• ***Within 24 hours,*** an oral or electronic notification. • ***Within 7 calendar days,*** a report that contains a description of the sediment and actions taken to address the cause of the deposition. Division staff may waive the requirement for a written report on a case-by-case basis. • If the stream is named on the NC 303(d) list as impaired for sediment-related causes, the permittee may be required to perform additional monitoring, inspections or apply more stringent practices if staff determine that additional requirements are needed to assure compliance with the federal or state impaired-waters conditions.
(b) Oil spills and release of hazardous substances per Item 1(b)-(c) above	• ***Within 24 hours,*** an oral or electronic notification. The notification shall include information about the date, time, nature, volume and location of the spill or release.
(c) Anticipated bypasses [40 CFR 122.41(m)(3)]	• ***A report at least ten days before the date of the bypass, if possible.*** The report shall include an evaluation of the anticipated quality and effect of the bypass.
(d) Unanticipated bypasses [40 CFR 122.41(m)(3)]	• ***Within 24 hours,*** an oral or electronic notification. • ***Within 7 calendar days,*** a report that includes an evaluation of the quality and effect of the bypass.
(e) Noncompliance with the conditions of this permit that may endanger health or the environment[40 CFR 122.41(l)(7)]	• ***Within 24 hours,*** an oral or electronic notification. • ***Within 7 calendar days,*** a report that contains a description of the noncompliance, and its causes; the period of noncompliance, including exact dates and times, and if the noncompliance has not been corrected, the anticipated time noncompliance is expected to continue; and steps taken or planned to reduce, eliminate, and prevent reoccurrence of the noncompliance. [40 CFR 122.41(l)(6). • Division staff may waive the requirement for a written report on a case-by-case basis.

PART II, SECTION G, ITEM (4)
DRAW DOWN OF SEDIMENT BASINS FOR MAINTENANCE OR CLOSE OUT

Sediment basins and traps that receive runoff from drainage areas of one acre or more shall use outlet structures that withdraw water from the surface when these devices need to be drawn down for maintenance or close out unless this is infeasible. The circumstances in which it is not feasible to withdraw water from the surface shall be rare (for example, times with extended cold weather). Non-surface withdrawals from sediment basins shall be allowed only when all of the following criteria have been met:

(a) The E&SC plan authority has been provided with documentation of the non-surface withdrawal and the specific time periods or conditions in which it will occur. The non-surface withdrawal shall not commence until the E&SC plan authority has approved these items,
(b) The non-surface withdrawal has been reported as an anticipated bypass in accordance with Part III, Section C, Item (2)(c) and (d) of this permit,
(c) Dewatering discharges are treated with controls to minimize discharges of pollutants from stormwater that is removed from the sediment basin. Examples of appropriate controls include properly sited, designed and maintained dewatering tanks, weir tanks, and filtration systems,
(d) Vegetated, upland areas of the sites or a properly designed stone pad is used to the extent feasible at the outlet of the dewatering treatment devices described in Item (c) above,
(e) Velocity dissipation devices such as check dams, sediment traps, and riprap are provided at the discharge points of all dewatering devices, and
(f) Sediment removed from the dewatering treatment devices described in Item (c) above is disposed of in a manner that does not cause deposition of sediment into waters of the United States.

NORTH CAROLINA *Environmental Quality*

NCG01 SELF-INSPECTION, RECORDKEEPING AND REPORTING

EFFECTIVE: 04/01/19

CITY OF RALEIGH - PLANS AUTHORIZED FOR CONSTRUCTION

Electronic Approval: This approval is being issued electronically. This approval is valid only upon the signature of a City of Raleigh Review Officer below. The City will retain a copy of the approved plans. Any work authorized by this approval must proceed in accordance with the plans kept on file with the City. This electronic approval may not be edited once issued. Any modification to this approval once issued will invalidate this approval.

City of Raleigh Development Approval _____

Raleigh Water Review Officer

NORTH CAROLINA PROFESSIONAL SEAL 036908 ENGINEER MARTY D. BIZZELL

04/20/22

BNK

BASS, NIXON & KENNEDY, INC.
CONSULTING ENGINEERS
6310 CHAPEL HILL ROAD, SUITE 250, RALEIGH, NC 27607
TELEPHONE: (919)851-4422 FAX: (919)851-8968
CERTIFICATION NUMBERS: NCBELS (C-0110); NCBOLA (C-0267)

NO.	DATE	DESCRIPTION	BY
		REVISIONS	

03-19157 | PROGRESS | MRM
JOB NO. | DATE | DRAWN BY

NCG01 PLAN

SCALE: N.T.S. | CHK BY:MDB

COBBLESTONE VILLAGE
MIXED USE DEVELOPMENT
TOWN OF ROLESVILLE, WAKE COUNTY, NORTH CAROLINA

SHEET C3.7

NOT RELEASED FOR CONSTRUCTION OR BID SOLICITATION

TOWN OF ROLESVILLE PROJECT NO.

R:\2019\19157 - Rolesville Town Center\CIVIL\04 Construction\07 - 19157_Details.dwg, (C3.7) NCG01, 4/20/2022 3:40:22 PM, marc.mueller

CITY OF RALEIGH - PLANS AUTHORIZED FOR CONSTRUCTION

Electronic Approval: This approval is being issued electronically. This approval is valid only upon the signature of a City of Raleigh Review Officer below. The City will retain a copy of the approved plans. Any work authorized by this approval must proceed in accordance with the plans kept on file with the City. This electronic approval may not be edited once issued. Any modification to this approval once issued will invalidate this approval.

City of Raleigh Development Approval _____

Raleigh Water Review Officer

STORMDRAINAGE PIPE TABLE

U.S. STRUCTURE	D.S. STRUCTURE	U.S. INVERT	D.S. INVERT	LENGTH	DIAMETER	MATERIAL	SLOPE
2	1	420.00	419.80	18.80	24	HDPE	1.06%
4	3	421.26	421.00	43.91	36	HDPE	0.60%
5	4	422.04	421.36	113.45	36	HDPE	0.60%
6	5	423.35	422.14	201.82	36	HDPE	0.60%
7	6	423.62	423.45	28.04	36	HDPE	0.60%
8	7	425.82	424.94	88.24	24	HDPE	1.00%
9	8	426.82	425.92	90.21	24	HDPE	1.00%
10	9	427.59	426.92	67.14	24	HDPE	1.00%
11	10	428.63	427.69	93.66	18	HDPE	1.00%
12	11	429.65	428.73	91.93	18	HDPE	1.00%
13	12	430.39	429.75	63.96	15	HDPE	1.00%

STORMDRAINAGE PIPE TABLE

U.S. STRUCTURE	D.S. STRUCTURE	U.S. INVERT	D.S. INVERT	LENGTH	DIAMETER	MATERIAL	SLOPE
14	13	430.75	430.49	25.95	15	HDPE	1.00%
15	5	424.10	423.05	105.41	15	HDPE	1.00%
16	7	424.61	423.72	147.77	24	HDPE	0.60%
17	16	425.41	424.71	116.44	24	HDPE	0.60%
18	17	428.85	427.77	107.92	15	HDPE	1.00%
19	18	431.57	430.69	88.39	15	HDPE	1.00%
20	19	432.50	431.67	83.01	15	HDPE	1.00%
21	6	424.24	423.45	78.65	24	HDPE	1.00%
22	21	424.60	424.34	26.08	15	HDPE	1.00%
23	22	426.78	424.70	207.76	15	HDPE	1.00%
24	10	432.22	430.86	90.55	15	HDPE	1.50%

STORMDRAINAGE PIPE TABLE

U.S. STRUCTURE	D.S. STRUCTURE	U.S. INVERT	D.S. INVERT	LENGTH	DIAMETER	MATERIAL	SLOPE
27	28	436.27	435.41	85.76	15	HDPE	1.00%
28	35	435.31	434.24	106.92	15	HDPE	1.00%
29	22	425.05	424.70	34.83	15	HDPE	1.00%
30	17	426.34	425.51	137.91	18	HDPE	0.60%
31	18	429.82	428.95	87.08	15	HDPE	1.00%
32	9	429.50	428.60	90.23	15	HDPE	1.00%
33	24	432.43	432.32	11.23	15	HDPE	1.00%
34	17	428.09	427.77	32.09	12	HDPE	1.00%
35	33	434.14	432.53	160.60	15	HDPE	1.00%

STORMDRAINAGE STRUCTURE TABLE

STRUCTURE NAME	INSERTION RIM ELEVATION (FLOWLINE)	STRUCTURE TYPE
1	422.45 INV. IN= 419.80 (2)	24" FES
2	425.18 INV. OUT= 420.00 (1)	RISER
3	424.83 INV. IN= 421.00 (4)	36" FES
4	428.06 INV. IN= 421.36 (5) INV. OUT= 421.26 (3)	NCDOT CURB INLET
5	429.08 INV. IN= 422.14 (6) INV. IN= 423.05 (15) INV. OUT= 422.04 (4)	NCDOT CURB INLET
6	430.99 INV. IN= 423.45 (7) INV. IN= 423.45 (21) INV. OUT= 423.35 (5)	NCDOT CURB INLET
7	431.15 INV. IN= 424.94 (8) INV. IN= 423.72 (16) INV. OUT= 423.62 (6)	NCDOT CURB INLET
8	433.95 INV. IN= 425.92 (9) INV. OUT= 425.82 (7)	NCDOT CURB INLET
9	433.95 INV. IN= 426.92 (10) INV. IN= 428.60 (32) INV. OUT= 426.82 (8)	NCDOT CURB INLET

STORMDRAINAGE STRUCTURE TABLE

STRUCTURE NAME	INSERTION RIM ELEVATION (FLOWLINE)	STRUCTURE TYPE
10	436.44 INV. IN= 427.69 (11) INV. IN= 430.86 (24) INV. OUT= 427.59 (9)	HDPE YARD INLET
11	437.44 INV. IN= 428.73 (12) INV. OUT= 428.63 (10)	HDPE YARD INLET
12	435.50 INV. IN= 429.75 (13) INV. OUT= 429.65 (11)	HDPE YARD INLET
13	436.00 INV. IN= 430.49 (14) INV. OUT= 430.39 (12)	NCDOT CURB INLET
14	436.00 INV. OUT= 430.75 (13)	NCDOT CURB INLET
15	428.50 INV. OUT= 424.10 (5)	HDPE YARD INLET
16	429.68 INV. IN= 424.71 (17) INV. OUT= 424.61 (7)	NCDOT CURB INLET
17	434.01 INV. IN= 427.77 (18) INV. IN= 425.51 (30) INV. IN= 427.77 (34) INV. OUT= 425.41 (16)	NCDOT CURB INLET
18	436.04 INV. IN= 430.69 (19) INV. IN= 428.95 (31) INV. OUT= 428.85 (17)	NCDOT CURB INLET

STORMDRAINAGE STRUCTURE TABLE

STRUCTURE NAME	INSERTION RIM ELEVATION (FLOWLINE)	STRUCTURE TYPE
19	437.52 INV. IN= 431.67 (20) INV. OUT= 431.57 (18)	NCDOT CURB INLET
20	438.65 INV. OUT= 432.50 (19)	NCDOT CURB INLET
21	431.60 INV. IN= 424.34 (22) INV. OUT= 424.24 (6)	HDPE YARD INLET
22	432.00 INV. IN= 424.70 (23) INV. IN= 424.70 (29) INV. OUT= 424.60 (21)	NCDOT CURB INLET
23	435.99 INV. OUT= 426.78 (22)	NCDOT CURB INLET
24	437.18 INV. IN= 432.32 (33) INV. OUT= 432.22 (10)	HDPE YARD INLET
27	441.00 INV. OUT= 436.27 (28)	HDPE YARD INLET
28	441.00 INV. IN= 435.41 (27) INV. OUT= 435.31 (35)	HDPE YARD INLET
29	428.50 INV. OUT= 425.05 (22)	HDPE YARD INLET

STORMDRAINAGE STRUCTURE TABLE

STRUCTURE NAME	INSERTION RIM ELEVATION (FLOWLINE)	STRUCTURE TYPE
30	430.12 INV. OUT= 426.34 (17)	NCDOT CURB INLET
31	434.05 INV. OUT= 429.82 (18)	NCDOT CURB INLET
32	435.72 INV. OUT= 429.50 (9)	NCDOT CURB INLET
33	437.87 INV. IN= 432.53 (35) INV. OUT= 432.43 (24)	NCDOT CURB INLET
34	430.03 INV. OUT= 428.09 (17)	HDPE YARD INLET
35	441.08 INV. IN= 434.24 (28) INV. OUT= 434.14 (33)	HDPE YARD INLET

NORTH CAROLINA PROFESSIONAL SEAL 036908 ENGINEER MARTY D. BIZZELL

04/20/22

BASS, NIXON & KENNEDY, INC.
CONSULTING ENGINEERS
6310 CHAPEL HILL ROAD, SUITE 250, RALEIGH, NC 27607
TELEPHONE: (919)851-4422 FAX: (919)851-8968
CERTIFICATION NUMBERS: NCBELS (C-0110); NCBOLA (C-0267)

NO.	DATE	DESCRIPTION	BY
		REVISIONS	

03-19157 PROGRESS MRM
JOB NO. DATE: DRAWN BY

STORM DRAINAGE PIPE & STRUCTURE TABLE

SCALE: CHK BY: MDB

COBBLESTONE VILLAGE
MIXED USE DEVELOPMENT
TOWN OF ROLESVILLE, WAKE COUNTY, NORTH CAROLINA

SHEET C3.8

TOWN OF ROLESVILLE PROJECT NO.

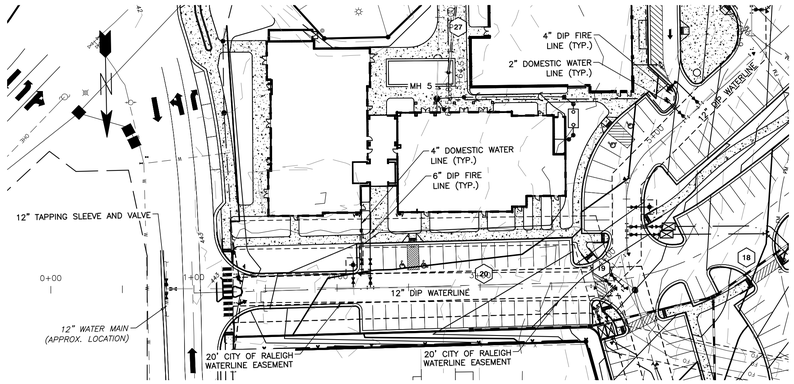

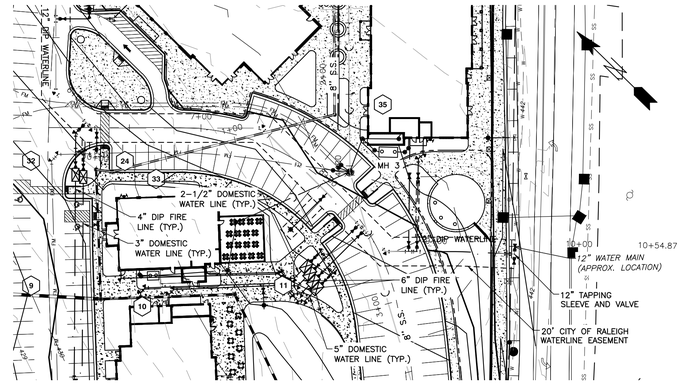

Public
Water Distribution / Extension System
The City of Raleigh consents to the connection and extension of the City's public water system as shown on this plan. The material and Construction methods used for this project shall conform to the standards and specifications of the City's Public Utilities Handbook.

City of Raleigh
Public Utilities Department Permit # W-3879

Authorization to Construct See digital signature

CITY OF RALEIGH - PLANS AUTHORIZED FOR CONSTRUCTION

Electronic Approval: This approval is being issued electronically. This approval is valid only upon the signature of a City of Raleigh Review Officer below. The City will retain a copy of the approved plans. Any work authorized by this approval must proceed in accordance with the plans kept on file with the City. This electronic approval may not be edited once issued. Any modification to this approval once issued will invalidate this approval.

City of Raleigh Development Approval _____

Raleigh Water Review Officer

PUBLIC WATERLINE PROFILE

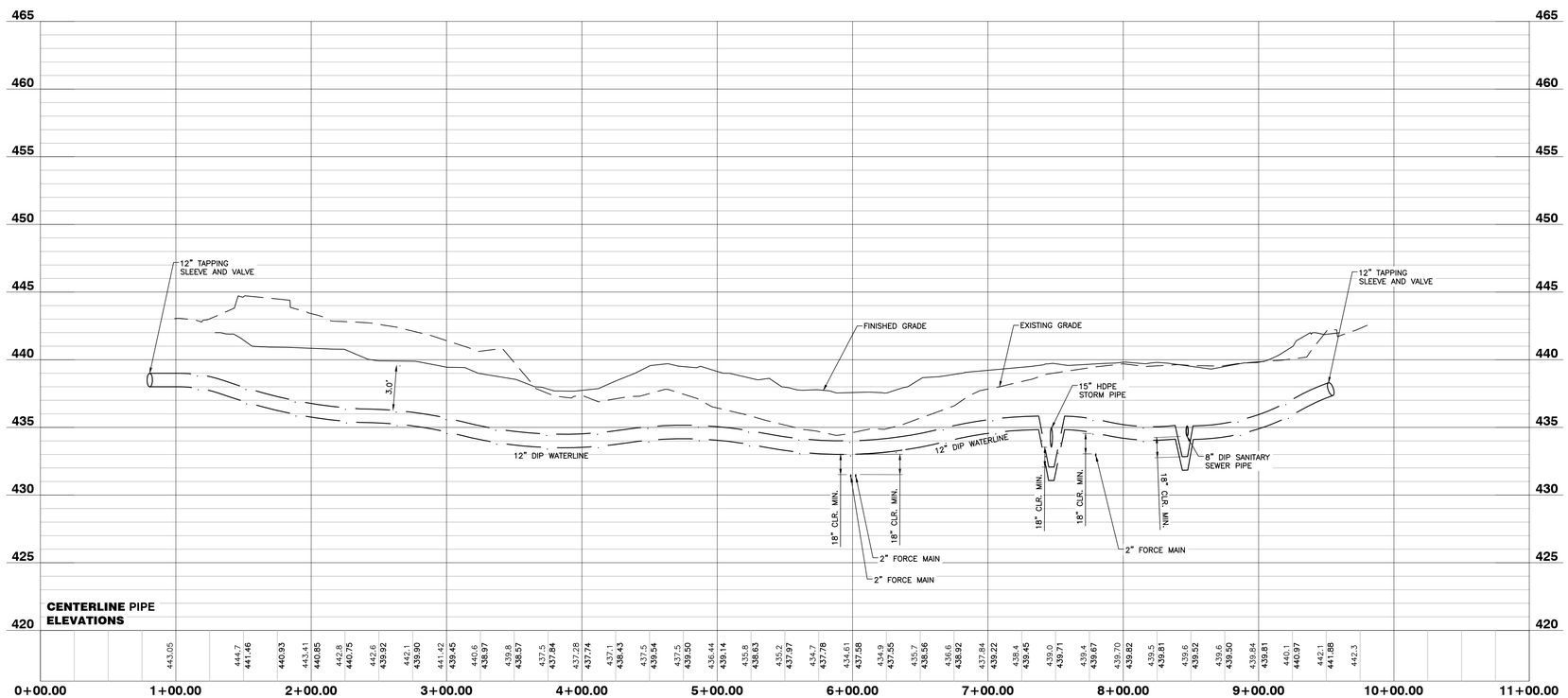

NORTH CAROLINA PROFESSIONAL SEAL 036808 ENGINEER MARTY D. BIZZELL
04/20/22

NO FLOODPLAINS EXIST ON-SITE

NOTE: ALL CONSTRUCTION ACTIVITY MUST BE IN ACCORDANCE WITH THE ACCEPTED POLICIES OF THE TOWN OF ROLESVILLE AND NCDOT

BASS, NIXON & KENNEDY, INC.
CONSULTING ENGINEERS
6310 CHAPEL HILL ROAD, SUITE 250, RALEIGH, NC 27607
TELEPHONE: (919)851-4422 FAX: (919)851-8968
CERTIFICATION NUMBERS: NCBELS (C-0110); NCBOLA (C-0267)

NO.	DATE	DESCRIPTION	BY
		REVISIONS	

03-19157 PROGRESS MRM
JOB NO. DATE DRAWN BY

PUBLIC WATERLINE PROFILE

SCALE: 1" = 50' H/ 1"= 5' V CHK BY:MDB

COBBLESTONE VILLAGE
MIXED USE DEVELOPMENT
TOWN OF ROLESVILLE, WAKE COUNTY, NORTH CAROLINA

SHEET C4.1

TOWN OF ROLESVILLE PROJECT NO.

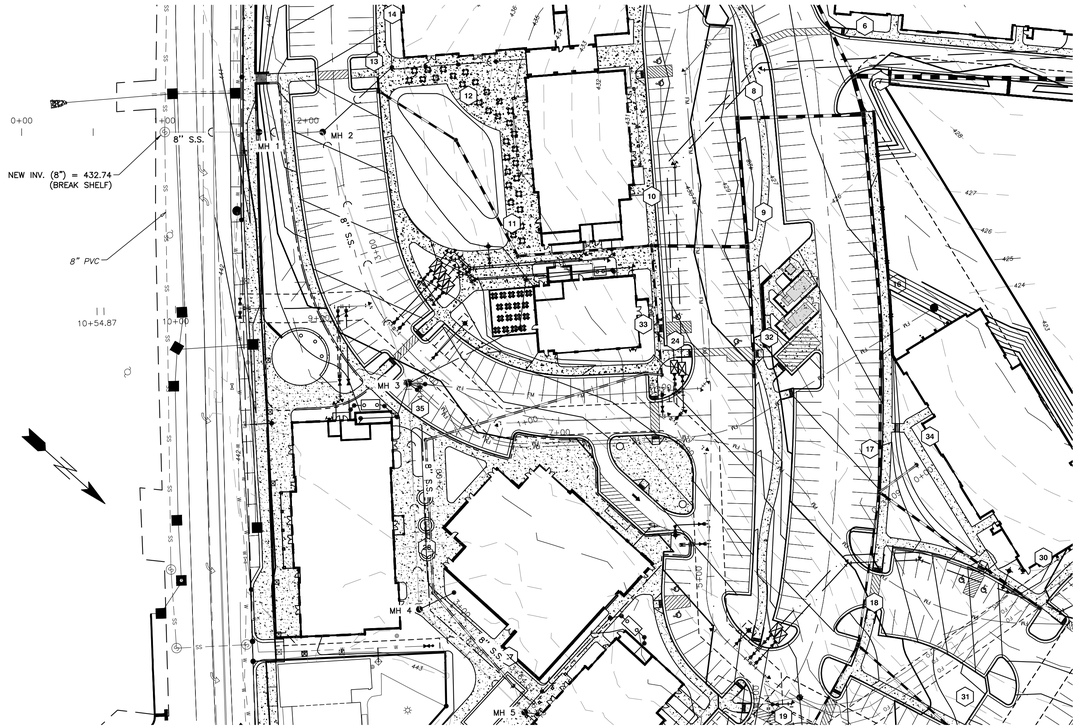

Private

Sewer Collection / Extension System

The City of Raleigh consents to the connection to its public sewer system and extension of the private sewer collection system as shown on this plan. The material and constructions methods used for this project shall conform to the standards and specifications of the City's Public Utilities Handbook.

City of Raleigh
Public Utilities Department Permit # S-4962 (P)

Authorization to Construct See digital signature

CITY OF RALEIGH - PLANS AUTHORIZED FOR CONSTRUCTION

Electronic Approval: This approval is being issued electronically. This approval is valid only upon the signature of a City of Raleigh Review Officer below. The City will retain a copy of the approved plans. Any work authorized by this approval must proceed in accordance with the plans kept on file with the City. This electronic approval may not be edited once issued. Any modification to this approval once issued will invalidate this approval.

City of Raleigh Development Approval _____

Raleigh Water Review Officer

SANITARY SEWER PROFILE

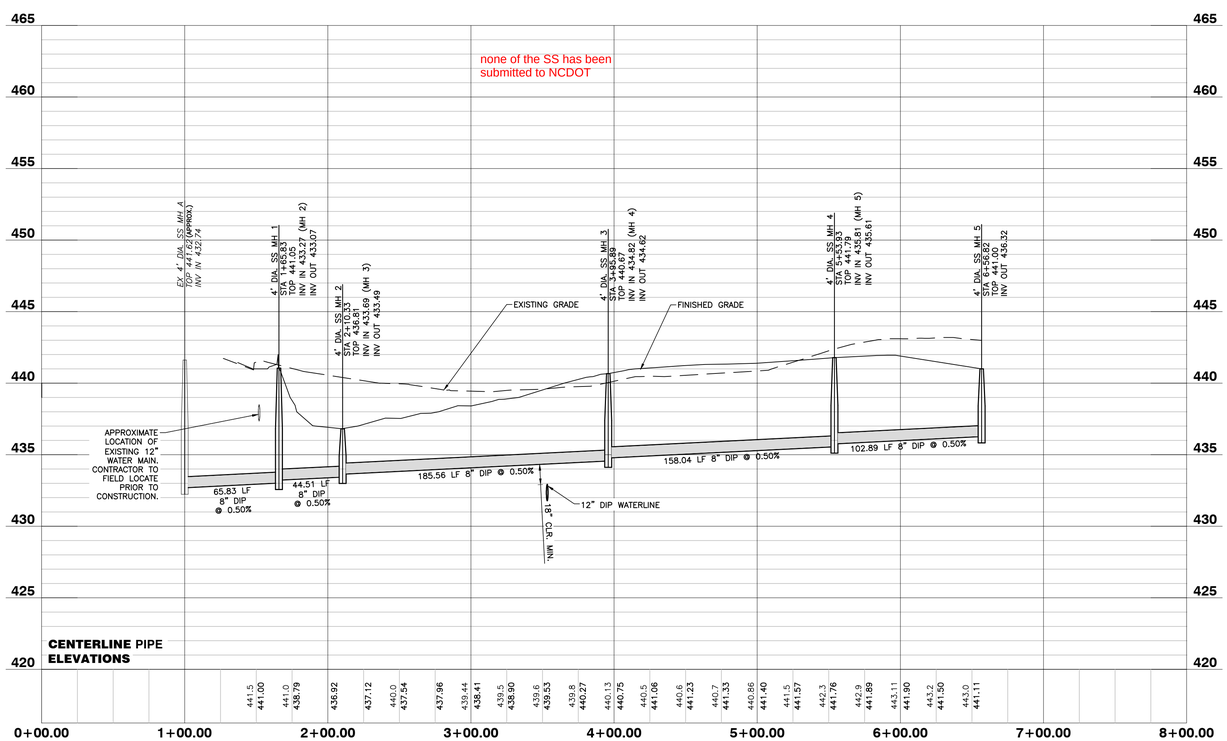

04/20/22

NO FLOODPLAINS EXIST ON-SITE

NOTE: ALL CONSTRUCTION ACTIVITY MUST BE IN ACCORDANCE WITH THE ACCEPTED POLICIES OF THE TOWN OF ROLESVILLE AND NCDOT

BASS, NIXON & KENNEDY, INC.
CONSULTING ENGINEERS
6310 CHAPEL HILL ROAD, SUITE 250, RALEIGH, NC 27607
TELEPHONE: (919)851-4422 FAX: (919)851-8968
CERTIFICATION NUMBERS: NCBELS (C-0110); NCBOLA (C-0267)

NO.	DATE	DESCRIPTION	BY
		REVISIONS	

03-19157 PROGRESS MRM
JOB NO. DATE DRAWN BY

SANITARY SEWER PROFILE

SCALE: 1" = 50' H/ 1"= 5' V CHK BY: MDB

COBBLESTONE VILLAGE
MIXED USE DEVELOPMENT
TOWN OF ROLESVILLE, WAKE COUNTY, NORTH CAROLINA

SHEET C4.2

TOWN OF ROLESVILLE PROJECT NO.

NOT RELEASED FOR CONSTRUCTION OR BID SOLICITATION

R:\2019\19157 - Rolesville Town Center\CIVIL\04 Construction\19 - 19157_Data.dwg, Sanitary Sewer Profile, 4/20/2022 3:37:02 PM, marc.mueller

GENERAL NOTES

1. A/C UNITS, TRANSFORMERS AND OTHER MECHANICAL OR UTILITY EQUIPMENT, NOT SHOWN ON THE PLAN, SHALL BE SCREENED FROM VIEW EITHER BY ADJUSTING PLANTINGS SHOWN IN CLOSE PROXIMITY TO EQUIPMENT OR BY THE ADDITION OF WAX MYRTLES @ 24" HT, 5' OC (SEE GENERAL NOTES FOR EQUIPMENT ACCESSIBILITY AND PLANTING PROXIMITY, ETC.). DUMPSTER IS SCREENED FROM OFF-SITE VIEWS.
2. CONTRACTOR SHALL VERIFY LOCATION OF ALL UTILITIES PRIOR TO PLANTING.
3. MULCH SHALL BE 3" DEEP MULCH UNLESS OTHERWISE NOTED.
4. VERIFICATION OF TOTAL QUANTITIES AS SHOWN IN THE PLANT LIST AND ON THE PLAN SHALL BE THE RESPONSIBILITY OF THE LANDSCAPE CONTRACTOR. ANY DISCREPANCIES BETWEEN PLANT LIST AND PLANTING PLAN SHALL BE BROUGHT TO THE ATTENTION OF THE LANDSCAPE ARCHITECT FOR CLARIFICATION.
5. ALL TREES, SHRUBS, GROUNDCOVER, ETC. SHALL CONFORM TO ACCEPTED STANDARDS ESTABLISHED BY THE AMERICAN ASSOCIATION OF NURSERYMEN.
6. ALL ROOTBALLS REMOVED FROM CONTAINERS SHALL BE SCARIFIED PRIOR TO PLANTING.
7. B&B AS LISTED UNDER "ROOT" IN THE PLANT LIST INDICATES BALLED & BURLAPPED.
8. ALL PLANTS/PLANTINGS SHALL BE MULCHED IMMEDIATELY AFTER PLANTING AND WATERED.
9. ALL PLANTS SHALL BEAR THE SAME RELATIONSHIP TO FINISHED GRADE AS THEY BORE TO PREVIOUS EXISTING GRADE (UNLESS OTHERWISE NOTED).
10. ALL TREES AND SHRUBS SHALL REQUIRE MULCH RINGS AT THEIR BASE IF LEFT WITHIN LAWN AREAS.
11. MULCH EDGES AND PROPOSED PLANTINGS SHALL NOT DISTURB ANY EXISTING GROUPS OF TREES TO REMAIN. EDGES ARE SHOWN FOR APPROXIMATION ONLY, BUT ARE TO INDICATE SMOOTH, CLEAN CURVES.
12. CULVERTS, RIP-RAP STRUCTURES, AND OTHER STORMWATER DEVICES SHALL BE SCREENED WITH EVERGREEN SHRUBS. IF STRUCTURES ARE NOT SHOWN ON THE PLAN, INSTALL WAX MYRTLES @ 24" HT. – 5' OC.
13. A 2' BUMPER OVERHANG, FROM THE BACK OF CURB, SHALL BE ALLOTTED FOR MATURE SHRUBS.
14. TREE PROTECTION FENCING SHALL BE MAINTAINED UNTIL ALL SITE WORK IS COMPLETED. THE FENCING SHALL BE REMOVED PRIOR TO THE FINAL SITE INSPECTION FOR THE CERTIFICATE OF OCCUPANCY (C.O.). THE SITE SHALL BE STABILIZED AND SEEDED PRIOR TO THE ISSUANCE OF A (C.O.).
15. UNLESS OTHERWISE NOTED ON THE PLAN, ALL DISTURBED AREAS ARE TO BE SEEDED WITH WARM SEASON GRASS, INCLUDING PARKING LOT PERIMETERS AND PARKING LOT ISLANDS..
16. PERIMETER BUFFER AREAS ARE TO BE MULCHED TO A DEPTH OF THREE INCHES.

LANDSCAPE CALCULATIONS

PERIMETER BUFFERS (10' TYPICAL):
WEST (1) – 352 LF = 4 TREES / 100 LF = 14 TREES REQUIRED/PROVIDED
= 40 SHRUBS / 100 LF = 141 SHRUBS REQUIRED/PROVIDED
= 352 LF MIN. 6' TALL FENCE REQUIRED

NORTH (2) – 187 LF = 4 TREES / 100 LF = 8 TREES REQUIRED/PROVIDED
= 40 SHRUBS / 100 LF = 75 SHRUBS REQUIRED/PROVIDED
= 187 LF MIN. 6' TALL FENCE REQUIRED

NORTHEAST (3) – 240 LF = 4 TREES / 100 LF = 10 TREES REQUIRED/PROVIDED
= 40 SHRUBS / 100 LF = 96 SHRUBS REQUIRED/PROVIDED
= 240 LF MIN. 6' TALL FENCE REQUIRED

EAST (4) – 247 LF = 4 TREES / 100 LF = 10 TREES REQUIRED/PROVIDED
= 40 SHRUBS / 100 LF = 100 SHRUBS REQUIRED/PROVIDED
= 247 LF MIN. 6' TALL FENCE REQUIRED

STREET YARDS:

MAIN ST – 595 LF = 1 TREE / 50 LF = 12 TREES REQUIRED/PROVIDED

WEST YOUNG ST – 242 LF = 1 TREE / 50 LF = 5 TREES REQUIRED/PROVIDED

VEHICULAR USE AREA COVERAGE: 1 TREE WITHIN 60' OF EACH PARKING SPACE

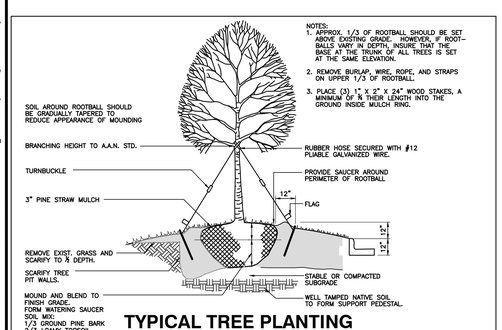

TYPICAL TREE PLANTING

NOT TO SCALE

PLANTING NOTES:

LOCATE PLANTS AND PLANTING BEDS BY USING SCALED DIMENSIONS FROM STREET, PROPERTY LINES, BACK OF CURB, BUILDINGS, WALLS, ETC. ALL PLANTS SHALL MEET OR EXCEED THE MINIMUM STANDARDS SET BY THE U.S.D.A. FOR NURSERY STOCK SPONSORED BY THE AMERICAN ASSOCIATION OF NURSERYMEN, INC., WASHINGTON, D.C. NO SUBSTITUTIONS SHALL BE PERMITTED WITHOUT WRITTEN APPROVAL FROM THE OWNER AND/OR THE LANDSCAPE ARCHITECT. SYMBOLS: B&B = BALLED & BURLAPPED; B.R. = BARE ROOT; CONT. = CONTAINER, O.C. = ON-CENTER

STREET TREE PLANTINGS TO BE COORDINATED IN CONCURRENCE WITH NCDOT STREETSCAPE IMPROVEMENT PROJECT ALONG S. MAIN AND YOUNG STREET(S).

PLANT LIST

KEY	SCIENTIFIC NAME	COMMON NAME	QUAN.	CAL	HT	ROOT	USE
	CANOPY TREES						
AF	Acer freemanii	Freeman Maple	32	2.5"	8'	B&B	Buffer/VUA
AR	Acer rubrum 'Brandywine'	Brandywine Red Maple	24	2.5"	8'	B&B	VUA
JV	Juniperus virginiana	Eastern Red Cedar	24	2.5"	8'	B&B	Buffer/VUA
QN	Quercus nutalli	Nuttall Oak	19	2.5"	8'	B&B	Street Tree
UP	Ulmus parvifolia 'Allee'	Allee Elm	6	2.5"	8'	B&B	VUA
	SHRUBS						
CJ	Cleyera japonica	Japanese Cleyera	98		24"	CONT.	Buffer
DG	Distylium 'Green Wave'	Greem Wave Distylium	30		24"	CONT.	VUA
IC	Ilex crenata 'Sky Pencil'	Sky Pencil Holly	6		36"	CONT.	Dumpster
ICC	Ilex crenata 'Chesapeake'	Chesapeake Holly	10		24"	CONT.	VUA Screen
ICG	Ilex crenata 'Green Lustre'	Green Lustre Japanese Holl	119		24"	CONT.	Buffer
JC	Juniperus chinensis 'Saybrook Gol	Saybrook Gold Juniper	44		24"	CONT.	VUA Screen
LC	Loropetalum chinense 'Daruma'	Daruma Loropetalum	36		24"	CONT.	VUA Screen
LJ	Ligustrum japonicum	Wax Ligustrum	98		24"	CONT.	Buffer
OF	Osmanthus fragrans	Fragrant Tea Olive	51		24"	CONT.	Buffer/Screen
VML	Viburnum x 'Moonlit Lace'	Moonlit Lace Viburnum	158		24"	CONT.	Buffer

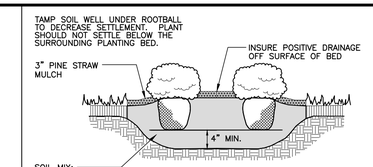

CONTINUOUS SHRUB PLANTING

NOT TO SCALE

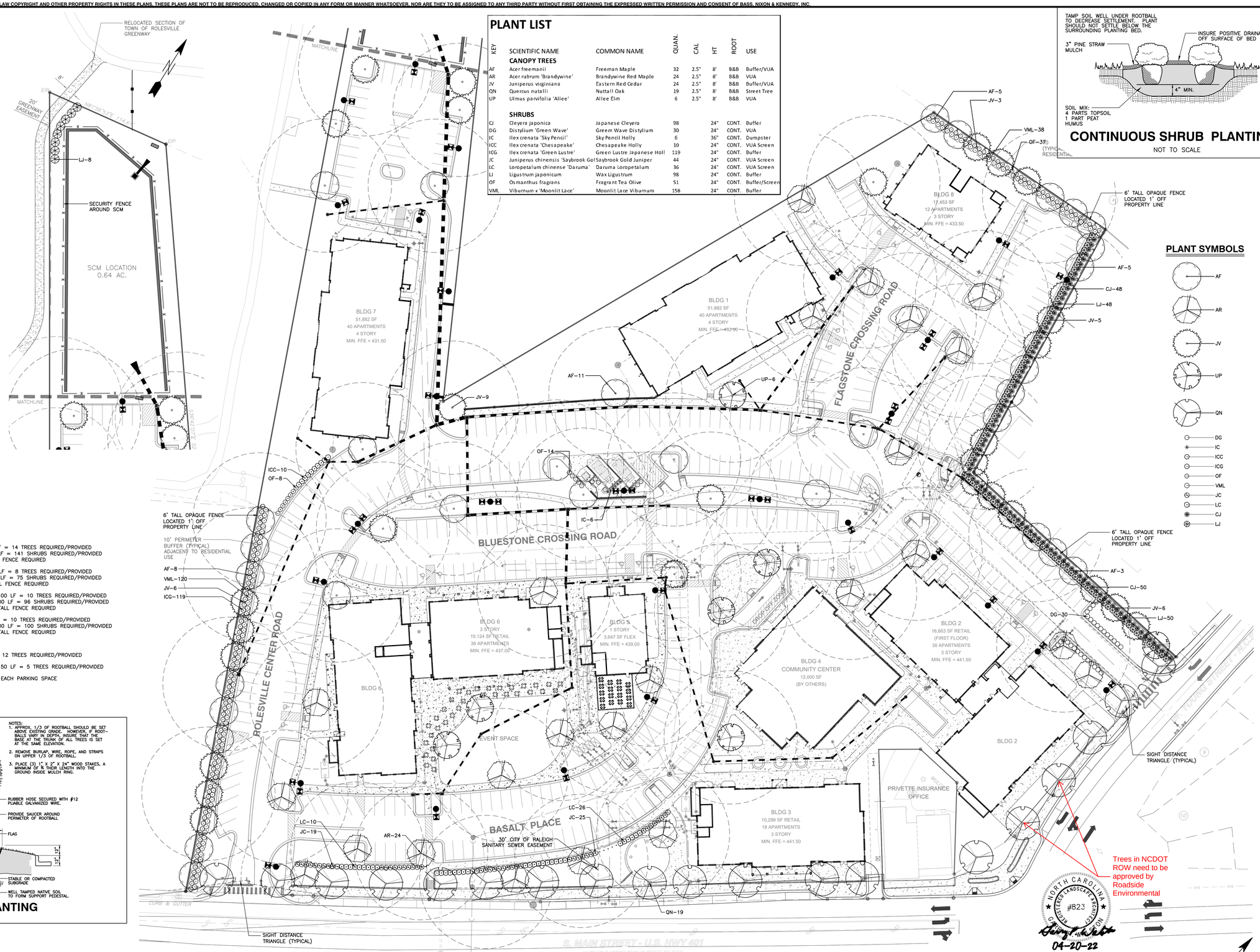

PLANT SYMBOLS

NORTH CAROLINA REGISTERED LANDSCAPE ARCHITECT #823 GREGORY W. WEBB
04-20-22

CITY OF RALEIGH - PLANS AUTHORIZED FOR CONSTRUCTION

Electronic Approval: This approval is being issued electronically. This approval is valid only upon the signature of a City of Raleigh Review Officer below. The City will retain a copy of the approved plans. Any work authorized by this approval must proceed in accordance with the plans kept on file with the City. This electronic approval may not be edited once issued. Any modification to this approval once issued will invalidate this approval.

City of Raleigh Development Approval _____

Raleigh Water Review Officer

NO FLOODPLAINS EXIST ON-SITE

NOTE: ALL CONSTRUCTION ACTIVITY MUST BE IN ACCORDANCE WITH THE ACCEPTED POLICIES OF THE TOWN OF ROLESVILLE AND NCDOT

SCALE IN FEET
0 20 40 80 120 160

TOWN OF ROLESVILLE PROJECT NO.

BNK
BASS, NIXON & KENNEDY, INC.
CONSULTING ENGINEERS
6310 CHAPEL HILL ROAD, SUITE 250, RALEIGH, NC 27607
TELEPHONE: (919)851-4422 FAX: (919)851-8968
CERTIFICATION NUMBERS: NCBELS (C-0110); NCBOLA (C-0267)

NO.	DATE	DESCRIPTION	BY
2	04-20-22	PER TOR COMMENTS	GW
1	5-25-21	PER TOR COMMENTS	LAK

REVISIONS

03-19157 JOB NO. | DATE | PROGRESS | DRAWN BY: GW

LANDSCAPE PLAN

SCALE: 1" = 40' | CHK BY: GPW

COBBLESTONE VILLAGE
MIXED USE DEVELOPMENT
TOWN OF ROLESVILLE, WAKE COUNTY, NORTH CAROLINA

SHEET L1.1

Outdoor Lighting

Shoebox LED

The energy-efficient Shoebox LED combines a decorative, contemporary style with versatility and ample lighting effect that is perfect for streets, parking lots, commercial buildings and residential communities. The Shoebox LED provides excellent color rendition along with a controlled light pattern that reduces glare and keeps the light directed only where you want it. Available in black, dark bronze, gray or white with one to four fixtures per pole.

LED *(Light Emitting Diode)*	150, 220, 420, 530 watts
Mounting heights	25', 30', 35'
Colors	Black Bronze Gray White
Poles	Fiberglass *(1 or 2 fixtures per pole)* Decorative tapered metal Decorative square metal

Note: 35' pole available in black or bronze only.

For additional information, visit us at **duke-energy.com/OutdoorLighting** or call us toll free at **866.769.6417**.

DUKE ENERGY. PROGRESS

BUILDING A SMARTER ENERGY FUTURE®

Outdoor Lighting

Shoebox LED

Light source: LED *(white)*

Replacement for:* LED Wattage 150 – 250-watt HPS and metal halide;
LED Wattage 205 – up to 400-watt metal halide;
LED Wattage 530 – 1,000-watt metal halide

Warm-up and restrike time: Instant on *(no warm-up or restrike time)*

Wattage	BUG Rating	Light Pattern	Lumens	Color Temp
LED 150	B5-U0-G3	IESNA Type V *(circular)*	19580	4,000K
LED 150	B3-U0-G4	IESNA Type IV *(forward throw)*	18459	
LED 150	B2-U0-G3	IESNA Type III *(oval)*	19006	
LED 220	B5-U0-G3	IESNA Type V *(circular)*	25870	
LED 220	B3-U0-G4	IESNA Type IV *(forward throw)*	24390	
LED 220	B2-U0-G4	IESNA Type III *(oval)*	25114	
LED 420	B5-U0-G5	IESNA Type V *(circular)*	48514	
LED 420	B3-U0-G5	IESNA Type IV *(forward throw)*	43765	
LED 530	B5-U0-G5	IESNA Type V *(circular)*	60296	
LED 530	B3-U0-G5	IESNA Type IV *(forward throw)*	54395	

light distribution pattern

** These are approximate replacement suggestions; actual conditions could be different.*

Poles available:

Name	*Mounting height*	*Color*
Round tapered decorative metal*	35'	Black Bronze
Decorative square metal*	25' and 30'	Black Gray Bronze White
Fiberglass	30'	Black *(1 or 2 fixtures per pole)* Gray *(1 or 2 fixtures per pole)*

Features	Benefits
Little or no installation cost	Frees up capital for other projects
Design services by lighting professionals included	Meets industry standards and lighting ordinances
Maintenance included	Eliminates high and unexpected repair bills
Electricity included	Less expensive than metered service
Warranty included	Worry-free
One low monthly cost on your electric bill	Convenience and savings for you
Turnkey operation	Provides hassle-free installation and service
Backed by over 40 years of experience	A name you can trust today … and tomorrow

**2' raised foundation available when required on metal poles only.*

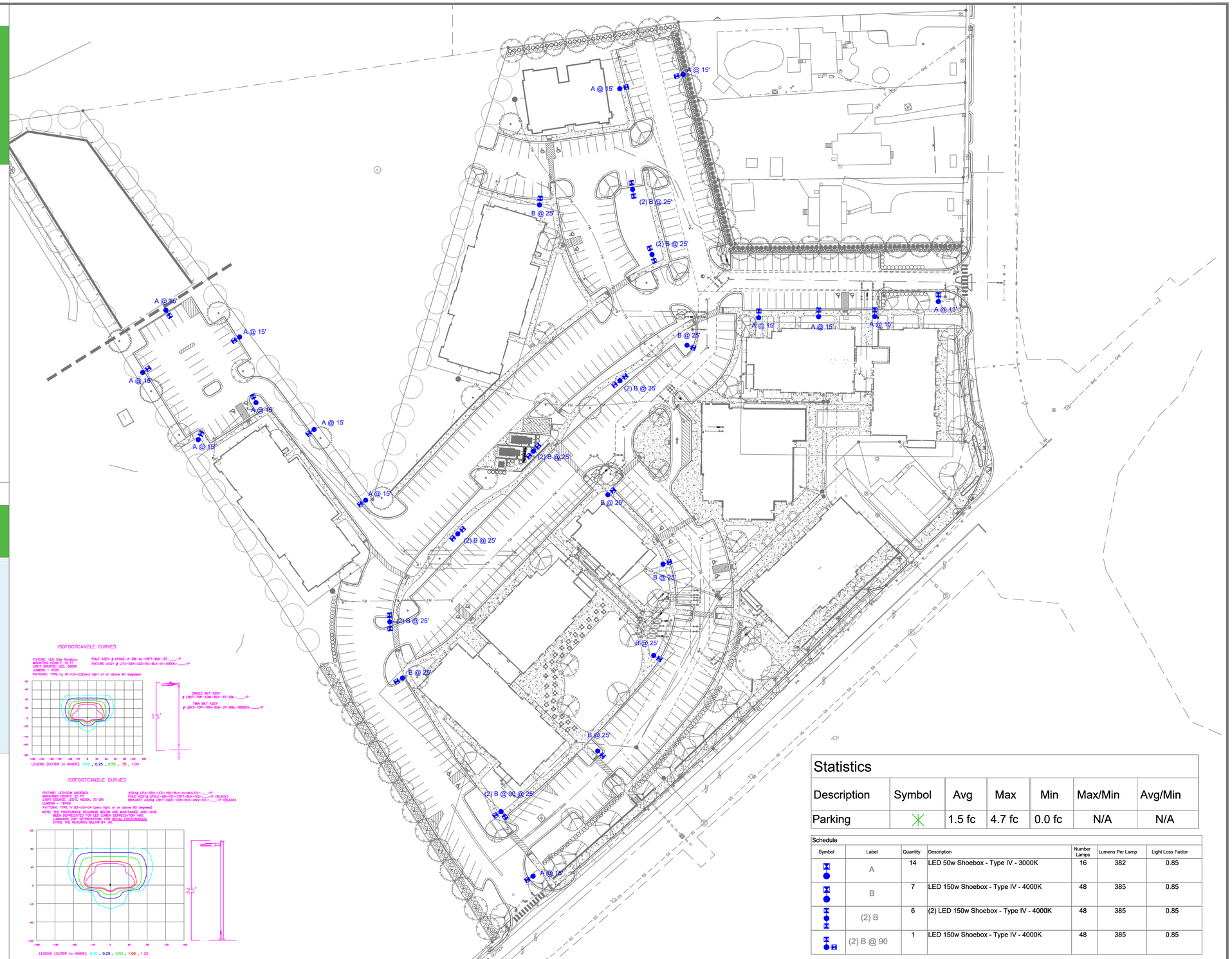

ISOFOOTCANDLE CURVES

ISOFOOTCANDLE CURVES

Statistics

Description	Symbol	Avg	Max	Min	Max/Min	Avg/Min
Parking		1.5 fc	4.7 fc	0.0 fc	N/A	N/A

Schedule

Symbol	Label	Quantity	Description	Number Lamps	Lumens Per Lamp	Light Loss Factor
	A	14	LED 50w Shoebox - Type IV - 3000K	16	382	0.85
	B	7	LED 150w Shoebox - Type IV - 4000K	48	385	0.85
	(2) B	6	(2) LED 150w Shoebox - Type IV - 4000K	48	385	0.85
	(2) B @ 90	1	LED 150w Shoebox - Type IV - 4000K	48	385	0.85

REV#	DATE	REVISION	BY
Rev A	02/14/22	LED Shoebox	NJ

Customer approval_____
Date_____

DISTANCE CALIBRATION (INCHES)
0 0.5 1.0 2.0 3.0 4.0

LIGHTING DESIGN TOLERANCE

The calculated footcandle light levels in this lighting design are predicted values and are based on specific information that has been supplied to Duke Energy. Any inaccuracies in the supplied information, differences in luminaire installation, lighted area geometry including elevation differences, reflective properties of surrounding surfaces, obstructions (foliage or otherwise) in the lighted area, or lighting from sources other than listed in this design may produce different results from the predicted values. Normal tolerances of voltage, lamp output, and ballast and luminaire manufacture will also affect results.

DUKE ENERGY. PROGRESS

PROPRIETARY & CONFIDENTIAL

COBBLESTONE VILLAGE
Rolesville, NC
SITE LIGHTING PLAN

Designed by DEP LIGHTING SOLUTIONS
Reviewed by T. Ferguson Scale 1" = 50'
Date 02/14/2022 Size "Arch D"
Description LED Shoebox
Drawing No. 22-0047A Sht. 1 OF 1

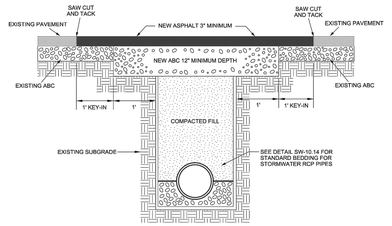

NOTES:
1. THE PAVEMENT EDGE SHALL BE DEFINED BY A STRAIGHT EDGE FORMED BY A MACHINED SAW CUT.
2. THE TRENCH SUBGRADE MATERIAL SHALL BE BACKFILLED WITH SUITABLE MATERIAL AND COMPACTED TO A DENSITY OF AT LEAST 95% OF THAT OBTAINED BY COMPACTING A SAMPLE OF THE MATERIAL IN ACCORDANCE WITH AASHTO T-99 AS MODIFIED BY NCDOT.
3. THE FINAL 1' OF FILL SHALL CONSIST OF ABC MATERIAL COMPACTED TO A DENSITY EQUAL TO 100% OF THAT OBTAINED BY COMPACTING A SAMPLE OF THE MATERIAL IN ACCORDANCE WITH AASHTO T-80 AS MODIFIED BY NCDOT. BITUMINOUS BASE OR BINDER MAY BE SUBSTITUTED IF APPROVED BY TRANSPORTATION DIRECTOR OR DESIGNEE.
4. THE ENTIRE THICKNESS/VERTICAL EDGE OF THE CUT SHALL BE TACKED.
5. THE SAME DEPTH OF PAVEMENT MATERIAL WHICH EXISTS SHALL BE REINSTALLED, BUT IN NO CASE SHALL THE ASPHALT BE LESS THAN 3" THICK.
6. THE ASPHALT PAVEMENT MATERIAL SHALL BE INSTALLED AND COMPACTED THOROUGHLY AND ROLLED WITH A SMOOTH DRUM ROLLER TO ACHIEVE A SMOOTH, LEVEL PATCH.

CITY OF RALEIGH
STANDARD DETAIL
REVISIONS | DATE 6/03/07 | NOT TO SCALE
ASPHALT PAVEMENT PATCH AND RCP PIPE BACKFILL
T-10.05

NOTE: SEE STANDARD DETAIL T-20.05 FOR PAVEMENT MARKING PLACEMENT

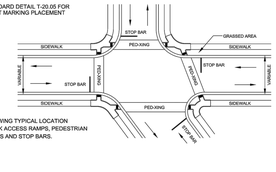

DETAIL SHOWING TYPICAL LOCATION OF SIDEWALK ACCESS RAMPS, PEDESTRIAN CROSSWALKS AND STOP BARS.

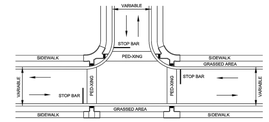

DETAIL SHOWING TYPICAL LOCATION OF SIDEWALK ACCESS RAMPS PEDESTRIAN CROSSWALKS AND STOP BARS FOR TEE INTERSECTION.

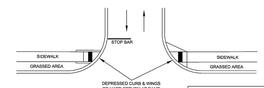

FOR RAMPS AT ASPHALT TO ASPHALT STREET TYPE DRIVEWAYS OR PRIVATE STREET TIE IN.

SHEET 1 OF 8
CITY OF RALEIGH
STANDARD DETAIL
REVISIONS | DATE 6/03/07 | NOT TO SCALE
CURB RAMPS
T-20.01.1

PAY LIMITS FOR CURB RAMP

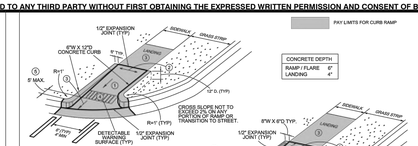

CONCRETE DEPTH
RAMP / FLARE 6"
LANDING 4"

TYPE N-1 (CURB TYPE)

1. 8.33% (12:1) MAX RAMP SLOPE
2. CROSS SLOPE: 2.00%
3. CURB RAMPS REQUIRE A 64"(5') MINIMUM LANDING WITH A MAXIMUM CROSS SLOPE AND LONGITUDINAL SLOPE OF 2% FOR PEDESTRIANS PERFORM TURNING MANEUVERS. SLOPE TO DRAIN TO CURB.
4. RAMPS AND DOMES SHALL BE INSTALLED THE SAME WIDTH AS THE SIDEWALK.
5. IF LENGTH EXCEEDS 6', TRUNCATED DOMES SHALL BE INSTALLED ALONG THE BACK OF THE CURB COVERING THE FULL WIDTH OF THE RAMP.

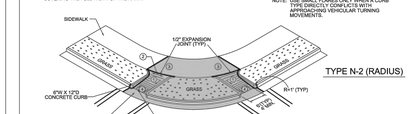

TYPE N-1A (FLARE TYPE)

NOTE: USE SMALL FLARES ONLY WHEN A CURB RAMP IS PROVIDED ON THE OPPOSITE APPROACHING VEHICULAR TURNING MOVEMENTS.

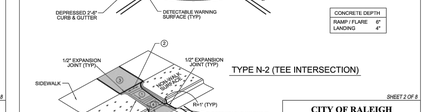

TYPE N-2 (RADIUS)

TYPE N-2 (TEE INTERSECTION)

SHEET 2 OF 8
CITY OF RALEIGH
STANDARD DETAIL
REVISIONS | DATE 6/03/07 | NOT TO SCALE
CURB RAMPS (NEW DEVELOPMENT)
T-20.01.2

PAY LIMITS FOR CURB RAMP

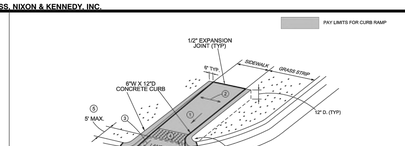

TYPE N-4

1. SLOPE TO MEET GRADE, 18" MAXIMUM.
2. CROSS SLOPE: 2.00%
3. CURB RAMPS REQUIRE A (4'-0") MINIMUM LANDING WITH A MAXIMUM CROSS SLOPE AND LONGITUDINAL SLOPE OF 2% FOR PEDESTRIANS PERFORM TURNING MANEUVERS. SLOPE TO DRAIN TO CURB.
4. RAMPS AND DOMES SHALL BE INSTALLED THE SAME WIDTH AS THE SIDEWALK.
5. IF LENGTH EXCEEDS 6', TRUNCATED DOMES SHALL BE INSTALLED ALONG THE BACK OF THE CURB COVERING THE FULL WIDTH OF THE RAMP.

CONCRETE DEPTH
RAMP 6"
LANDING 4"

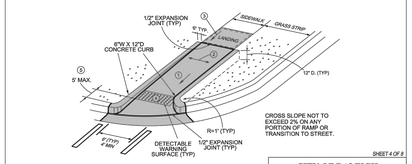

TYPE N-4A

SHEET 4 OF 8
CITY OF RALEIGH
STANDARD DETAIL
REVISIONS | DATE 6/03/07 | NOT TO SCALE
CURB RAMPS (NEW DEVELOPMENT)
T-20.01.4

CITY OF RALEIGH CURB RAMPS GENERAL NOTES

1. CITY OF RALEIGH STANDARD CURB RAMPS HAVE BEEN DEVELOPED IN ACCORDANCE WITH THE AMERICANS WITH DISABILITIES ACT (ADA) AND PUBLIC RIGHT OF WAY ACCESS GUIDELINES (PROWAG).
2. CURB RAMPS SHALL BE PROVIDED AT LOCATIONS AS SHOWN ON THE PLANS OR AS DIRECTED BY THE ENGINEER. SIDEWALK ACCESS RAMPS SHALL BE LOCATED AS INDICATED IN THE DETAIL. HOWEVER, THE LOCATION MAY BE ADJUSTED IN COORDINATION WITH THE CITY OF RALEIGH WHERE EXISTING LIGHT POLES, FIRE HYDRANTS, DROP INLETS, ETC. AFFECT PLACEMENT.
3. DOUBLE WHEELCHAIR RAMPS ARE TO BE INSTALLED AT ALL PUBLIC STREET INTERSECTIONS WHERE SIDEWALK IS REQUIRED.
4. THE WALKING SURFACE SHALL BE SLIP RESISTANT. THE COLOR FOR THE DETECTABLE WARNING AREA SHALL BE YELLOW FOR CONTRAST.
5. NO SLOPE ON THE SIDEWALK ACCESS RAMP SHALL EXCEED 1":FT (12:1) IN RELATIONSHIP TO THE GRADE OF THE STREET.
6. IN NO CASE SHALL THE WIDTH OF THE SIDEWALK ACCESS RAMP BE LESS THAN 48" ALL RAMPS SHALL BE INSTALLED THE SAME WIDTH AS THE SIDEWALK.
7. USE CLASS A (3000 PSI) CONCRETE WITH A SIDEWALK FINISH IN ORDER TO OBTAIN A ROUGH NONSKID SURFACE.
8. A 1/2" EXPANSION JOINT INSTALLED FULL DEPTH WILL BE REQUIRED WHERE THE CONCRETE SIDEWALK ACCESS RAMP JOINS THE CURB AND ALSO WHERE NEW CONCRETE ABUTS EXISTING CONCRETE.
9. CURB RAMPS SHOULD BE PLACED PARALLEL TO THE DIRECTION OF TRAVEL.

SHEET 5 OF 8
CITY OF RALEIGH
STANDARD DETAIL
REVISIONS | DATE 6/03/07 | NOT TO SCALE
CURB RAMP NOTES
T-20.01.8

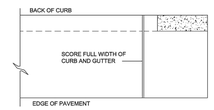

PLAN

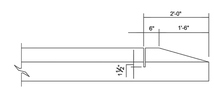

FRONT

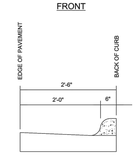

END

CITY OF RALEIGH
STANDARD DETAIL
REVISIONS | DATE 6/03/07 | NOT TO SCALE
STANDARD METHOD OF ENDING CURB AND GUTTER
T-10.25

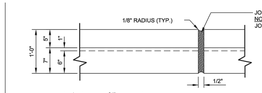

FRONT ELEVATION
TRANSVERSE EXPANSION JOINT

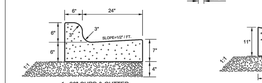

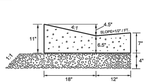

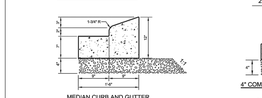

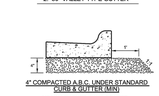

NO VALLEY CURB SHALL BE USED AT INTERSECTIONS, HYDRANTS, ETC.

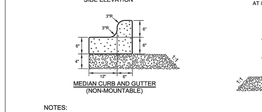

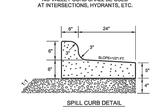

NOTES:
1. 10' MAXIMUM BETWEEN DUMMY JOINTS. 10' MAXIMUM BETWEEN DUMMY JOINTS ON MACHINE POURS.
2. 1/2" EXPANSION JOINT EVERY 50'.
3. 3000 PSI CONCRETE MINIMUM, 4" SLUMP MAXIMUM.
4. LIQUID MEMBRANE CURING COMPOUND SHALL MEET THE REQUIREMENTS OF SECTION 1020-2 OF NCDOT STANDARDS & SPECIFICATIONS FOR ROADS AND STRUCTURES.
5. ALL CONSTRUCTION JOINTS SHALL BE FILLED WITH JOINT FILLER AND SEALER IN ACCORDANCE WITH NCDOT ROADWAY STANDARD DETAIL 846.01 THE JOINT MATERIAL SHALL CONFORM TO SECTION 1028-2 OF NCDOT STANDARD & SPECIFICATIONS FOR ROADS AND STRUCTURES.
6. REFER TO NCDOT DETAIL 846.01 FOR CURB AND GUTTER SUPERELEVATION RATES.

SHEET 1 OF 2
CITY OF RALEIGH
STANDARD DETAIL
REVISIONS | DATE 6/03/07 | NOT TO SCALE
CURB AND GUTTER
T-10.26.1

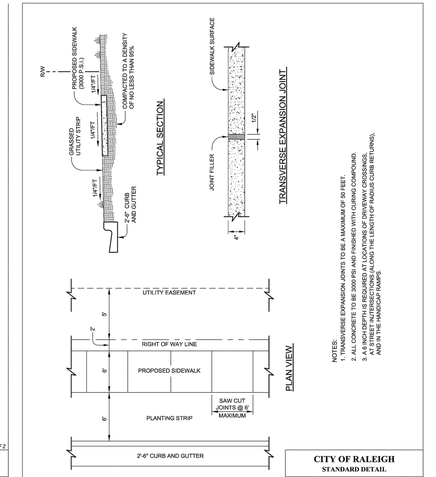

NOTES:
1. TRANSVERSE EXPANSION JOINTS TO BE A MAXIMUM OF 50 FEET.
2. A 4" COMPACTED A.B.C. UNDER STANDARD CURB & GUTTER (MIN) IS REQUIRED.
3. A 6 INCH DEPTH IS REQUIRED AT LOCATIONS OF DRIVEWAY CROSSINGS.
4. AT STREET INTERSECTIONS ALONG THE LENGTH OF RADIUS CURB RETURNS, AND IN THE VARIABLE WIDTH RAMPS.

CITY OF RALEIGH
STANDARD DETAIL
REVISIONS | DATE 6/03/07 | NOT TO SCALE
CONCRETE SIDEWALK
T-30.01

NOTES:
CONCRETE FOR CURB AND GUTTER SHALL CONTAIN NOT MORE THAN 6.6 GALLONS OF WATER PER BAG NOT LESS 1.5 B.B.L.S PER CUBIC YARD. FORM MUST BE ACCEPTABLE TO ENGINEER.

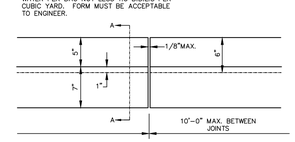

FRONT VIEW

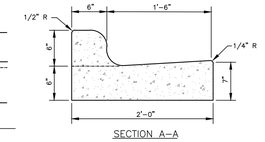

SECTION A–A

TYPICAL CURB AND GUTTER SECTION 24" FOR PRIVATE STREETS AND DRIVES ONLY
SCALE: NTS

DELETE "VAN ACCESSIBLE" FOR STANDARD HC SIGN

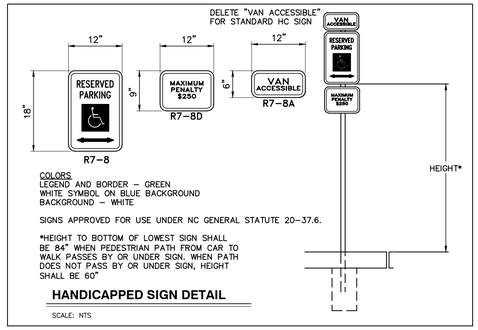

COLORS:
LEGEND AND BORDER – GREEN
WHITE SYMBOL ON BLUE BACKGROUND
BACKGROUND – WHITE

SIGNS APPROVED FOR USE UNDER NC GENERAL STATUTE 20–37.6.

*HEIGHT TO BOTTOM OF LOWEST SIGN SHALL BE 84" WHEN PEDESTRIAN PATH FROM CAR TO WALK PASSES BY OR UNDER SIGN. WHEN PATH DOES NOT PASS BY OR UNDER SIGN, HEIGHT SHALL BE 60"

HANDICAPPED SIGN DETAIL
SCALE: NTS

CITY OF RALEIGH - PLANS AUTHORIZED FOR CONSTRUCTION

Electronic Approval: This approval is being issued electronically. This approval is valid only upon the signature of a City of Raleigh Review Officer below. The City will retain a copy of the approved plans. Any work authorized by this approval must proceed in accordance with the plans kept on file with the City. This electronic approval may not be edited once issued. Any modification to this approval once issued will invalidate this approval.

City of Raleigh Development Approval _____

Raleigh Water Review Officer

NORTH CAROLINA PROFESSIONAL SEAL 036908 ENGINEER MARY D. BIZZELL

04/20/22

BASS, NIXON & KENNEDY, INC.
CONSULTING ENGINEERS
6310 CHAPEL HILL ROAD, SUITE 250, RALEIGH, NC 27607
TELEPHONE: (919)851-4422 FAX: (919)851-8968
CERTIFICATION NUMBERS: NCBELS (C-0110); NCBOLA (C-0267)

NO.	DATE	DESCRIPTION	BY
		REVISIONS	

03-19157 JOB NO. | PROGRESS DATE | MRM DRAWN BY

DETAILS

SCALE: N.T.S. | CHK BY:MDB

COBBLESTONE VILLAGE
MIXED USE DEVELOPMENT
TOWN OF ROLESVILLE, WAKE COUNTY, NORTH CAROLINA

SHEET **C5.1**

NOT RELEASED FOR CONSTRUCTION OR BID SOLICITATION

TOWN OF ROLESVILLE PROJECT NO.

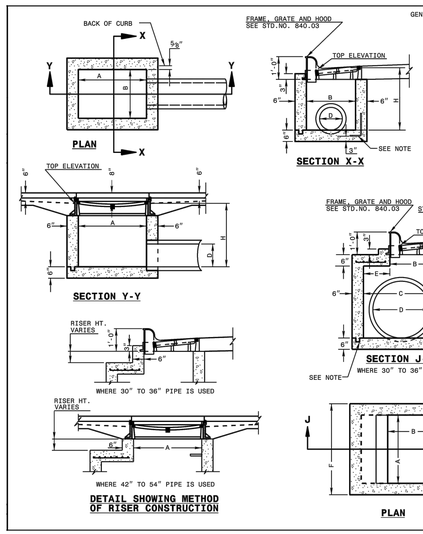

GENERAL NOTES:

USE CLASS "B" CONCRETE THROUGHOUT.

PROVIDE ALL CATCH BASINS OVER 3'-6" IN DEPTH WITH STEPS 12" ON CENTER. USE STEPS WHICH COMPLY WITH STD. DRAWING 840.66.

OPTIONAL CONSTRUCTION - MONOLITHIC POUR, 2" KEYWAY, OR #4 BAR DOWELS AT 12" CENTERS AS DIRECTED BY THE ENGINEER.

USE FORMS FOR THE CONSTRUCTION OF THE BOTTOM SLAB.

IF REINFORCED CONCRETE PIPE IS SET IN BOTTOM SLAB OF BOX, ADD TO SLAB AS SHOWN ON STD. NO. 840.00.

USE TYPE "E", "F" AND "G" GRATES UNLESS OTHERWISE INDICATED.

FOR 8'-0" IN HEIGHT OR LESS USE 6" WALLS AND BOTTOM SLAB. OVER 8'-0" TO 16'-0" IN HEIGHT USE 8" WALLS AND BOTTOM SLAB. ADJUST QUANTITIES ACCORDINGLY.

CONSTRUCT WITH PIPE CROWNS MATCHING.

CHAMFER ALL EXPOSED CORNERS 1".

DRAWING NOT TO SCALE.

1-18 STATE OF NORTH CAROLINA DEPT. OF TRANSPORTATION DIVISION OF HIGHWAYS RALEIGH, N.C.

ROADWAY STANDARD DRAWING FOR
CONCRETE CATCH BASIN
12" THRU 54" PIPE

SHEET 1 OF 2
840.02

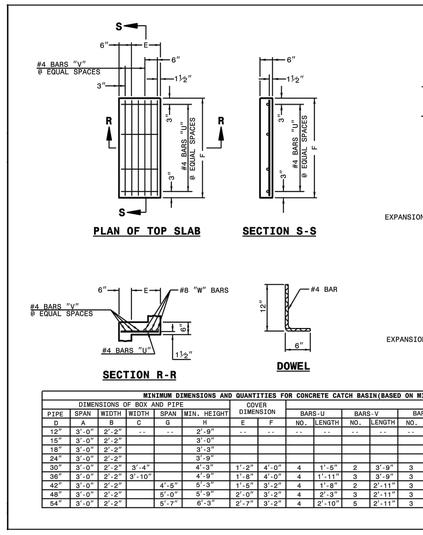

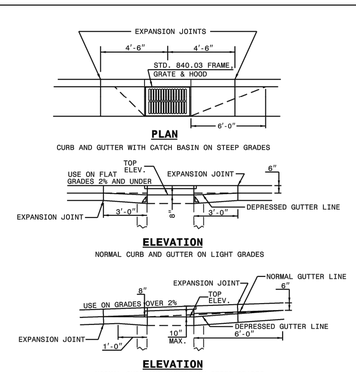

MINIMUM DIMENSIONS AND QUANTITIES FOR CONCRETE CATCH BASIN(BASED ON MIN. HEIGHT, H, WITH NO RISER) *

DIMENSIONS OF BOX AND PIPE						COVER DIMENSION		BARS-U		BARS-V		BARS-W				CU.YDS. CONC. IN BOX		DEDUCTIONS ONE PIPE	
PIPE D	SPAN A	WIDTH B	WIDTH C	SPAN G	MIN. HEIGHT H	E	F	NO.	LENGTH	NO.	LENGTH	NO.	LENGTH	TOTAL LBS.	TOP SLAB	BOTTOM SLAB	TOT. CONC. FOR MINIMUM HEIGHT, H	C.M.	R.C.
12"	3'-0"	2'-2"	--	--	2'-9"	--	--	--	--	--	--	--	--	--	--	0.235	0.772	0.015	0.026
15"	3'-0"	2'-2"			3'-0"											0.235	0.829	0.023	0.036
18"	3'-0"	2'-2"			3'-3"											0.235	0.887	0.033	0.049
24"	3'-0"	2'-2"			3'-9"											0.235	1.001	0.059	0.085
30"	3'-0"	2'-2"	3'-4"		4'-3"	1'-2"	4'-0"	4	1'-5"	2	3'-9"	3	3'-9"	39	0.123	0.321	1.433	0.092	0.127
36"	3'-0"	2'-2"	3'-10"		4'-9"	1'-8"	4'-0"	4	1'-11"	2	3'-9"	3	3'-9"	43	0.161	0.358	1.714	0.132	0.178
42"	3'-0"	2'-2"		4'-5"	5'-3"	1'-5"	3'-2"	4	1'-8"	2	2'-11"	3	2'-11"	32	0.112	0.318	1.738	0.180	0.243
48"	3'-0"	2'-2"		5'-0"	5'-9"	2'-0"	3'-2"	4	2'-3"	3	2'-11"	3	2'-11"	35	0.145	0.352	2.052	0.235	0.317
54"	3'-0"	2'-2"		5'-7"	6'-3"	2'-7"	3'-2"	4	2'-10"	5	2'-11"	3	2'-11"	41	0.180	0.386	2.387	0.297	0.401

* RISER HAS .228 CUBIC YARDS OF CONCRETE PER FOOT HEIGHT

1-18 STATE OF NORTH CAROLINA DEPT. OF TRANSPORTATION DIVISION OF HIGHWAYS RALEIGH, N.C.

ROADWAY STANDARD DRAWING FOR
CONCRETE CATCH BASIN
12" THRU 54" PIPE

SHEET 2 OF 2
840.02

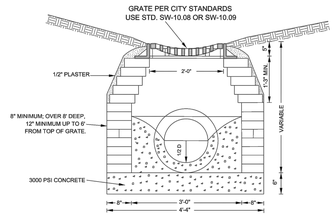

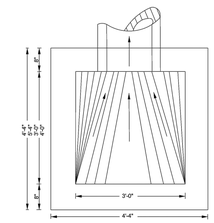

NOTES:

1. FOR 24" RCP & LARGER USE PIPE DIAMETER PLUS 12" FOR MINIMUM INSIDE DIMENSION.
2. 24" X 24" CASTING WITH 12", 15" & 18" PIPE, 24" X 36" CASTING USED WITH 24" PIPE OR LARGER. IF PLACED WITHIN PUBLIC R/W CASTING MUST BE TRAFFIC BEARING TYPE PER NCDOT STANDARDS.
3. USE 4" X 4" X 8" OR 4" X 8" X 16" SOLID CONCRETE BLOCK, CAST IN PLACE OR PRECAST CONCRETE TO MEET N.C.D.O.T. STANDARDS ACCEPTABLE.
4. STEPS SHALL BE INSTALLED IN ALL DROP INLETS OVER 2' IN DEPTH. DEPTH SHALL BE MEASURED FROM THE TOP OF GRATE TO THE INVERT OF THE DROP INLET.

CITY OF RALEIGH
STANDARD DETAIL

REVISIONS	DATE: 6/05/01	NOT TO SCALE
	STANDARD DROP INLET	
	SW-10.03	

TYPICAL MH FOR STORM SEWER

PIPE SIZE	MH DIAMETER
12-24"	4'-0"
30-42"	5'-0"
48"	6'-0"
54"	6'-0"

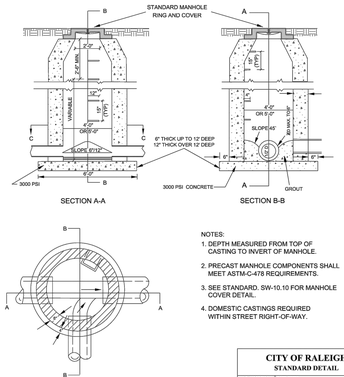

NOTES:

1. DEPTH MEASURED FROM TOP OF CASTING TO INVERT OF MANHOLE.
2. PRECAST MANHOLE COMPONENTS SHALL MEET ASTM-C-478 REQUIREMENTS.
3. SEE STANDARD. SW-10.10 FOR MANHOLE COVER DETAIL.
4. DOMESTIC CASTINGS REQUIRED WITHIN STREET RIGHT-OF-WAY.

CITY OF RALEIGH
STANDARD DETAIL

REVISIONS	DATE: 6/05/01	NOT TO SCALE
	STANDARD CLASS "A" MANHOLE	
	SW-10.05	

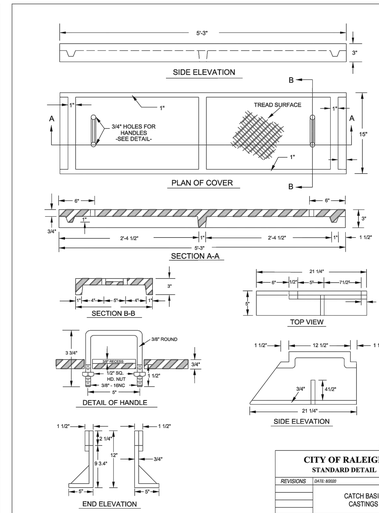

SHEET 1 OF 2

CITY OF RALEIGH
STANDARD DETAIL

REVISIONS	DATE: 6/05/01	NOT TO SCALE
	CATCH BASIN CASTINGS	
	SW-10.06.1	

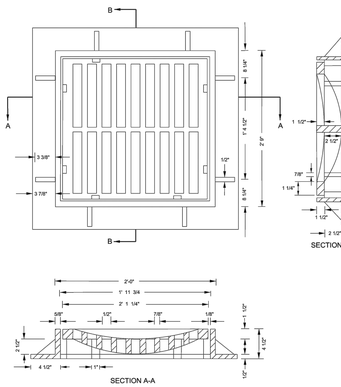

CITY OF RALEIGH
STANDARD DETAIL

REVISIONS	DATE: 6/05/01	NOT TO SCALE
	DROP INLET CASTING	
	SW-10.08	

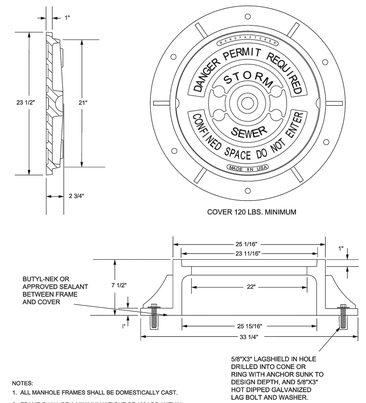

NOTES:

1. ALL MANHOLE FRAMES SHALL BE DOMESTICALLY CAST.
2. FRAME SHALL BE A MINIMUM WEIGHT OF 162 LBS. WITHIN PUBLIC ROW AND 160 LBS. WITHIN EASEMENTS.
3. COVER SHALL WEIGH A MINIMUM OF 120 LBS.
4. ALL MANHOLE FRAMES OUTSIDE OF PAVED SURFACE SHALL BE BOLTED TO THE CONE SECTION OR RING WITH A MINIMUM OF 4 BOLTS PER FRAME.

CITY OF RALEIGH
STANDARD DETAIL

REVISIONS	DATE: 6/05/01	NOT TO SCALE
	STANDARD STORM MANHOLE COVER	
	SW-10.10	

COVER FOR PIPES WITHIN THE R.O.W. MINIMUM PIPE CLEARANCE FROM INVERT TO SUBGRADE	
PIPE SIZE (in)	CLEARANCE DISTANCE (ft)
15	2.4
18	2.7
24	3.3
30	3.6
36	4.4
42	4.9
48	5.4
54	6.0
60	6.5
66	7.0
72	7.6

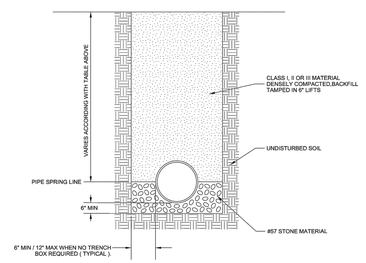

CITY OF RALEIGH
STANDARD DETAIL

REVISIONS	DATE: 6/05/01	NOT TO SCALE
	BEDDING FOR STORMWATER RCP PIPES	
	SW-10.14	

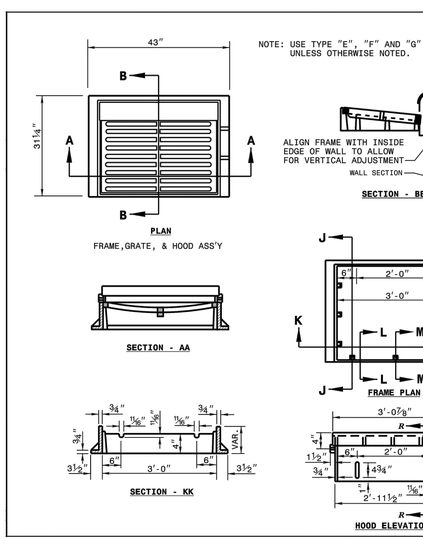

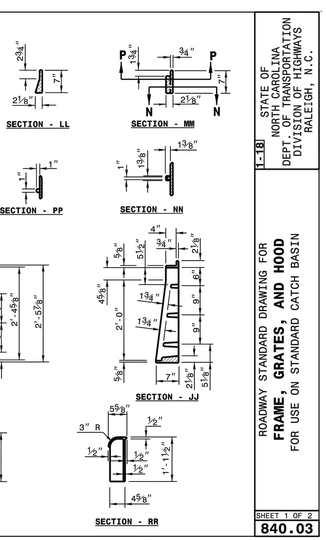

1-18 STATE OF NORTH CAROLINA DEPT. OF TRANSPORTATION DIVISION OF HIGHWAYS RALEIGH, N.C.

ROADWAY STANDARD DRAWING FOR
FRAME, GRATES, AND HOOD
FOR USE ON STANDARD CATCH BASIN

SHEET 1 OF 2
840.03

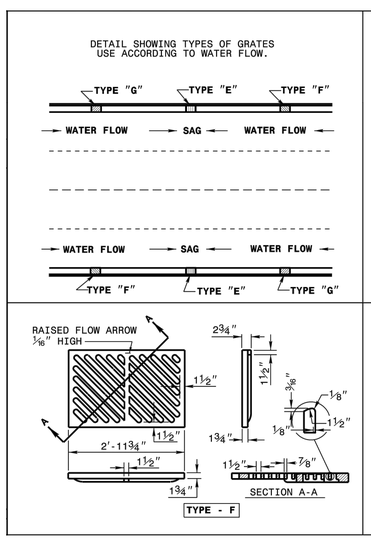

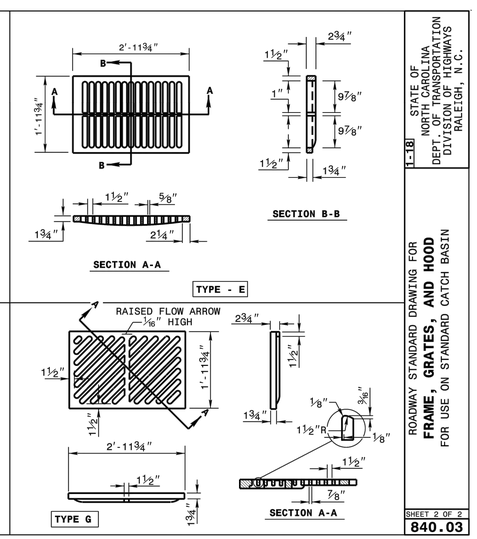

1-18 STATE OF NORTH CAROLINA DEPT. OF TRANSPORTATION DIVISION OF HIGHWAYS RALEIGH, N.C.

ROADWAY STANDARD DRAWING FOR
FRAME, GRATES, AND HOOD
FOR USE ON STANDARD CATCH BASIN

SHEET 2 OF 2
840.03

CITY OF RALEIGH - PLANS AUTHORIZED FOR CONSTRUCTION

Electronic Approval: This approval is being issued electronically. This approval is valid only upon the signature of a City of Raleigh Review Officer below. The City will retain a copy of the approved plans. Any work authorized by this approval must proceed in accordance with the plans kept on file with the City. This electronic approval may not be edited once issued. Any modification to this approval once issued will invalidate this approval.

City of Raleigh Development Approval _____

Raleigh Water Review Officer

NORTH CAROLINA PROFESSIONAL SEAL 036908 ENGINEER MARTY D. BIZZELL

04/20/22

BNK
BASS, NIXON & KENNEDY, INC.
CONSULTING ENGINEERS
6310 CHAPEL HILL ROAD, SUITE 250, RALEIGH, NC 27607
TELEPHONE: (919)851-4422 FAX: (919)851-8968
CERTIFICATION NUMBERS: NCBELS (C-0110); NCBOLA (C-0267)

NO.	DATE	DESCRIPTION	BY
		REVISIONS	

03-19157 PROGRESS MRM
JOB NO. DATE: DRAWN BY:
DETAILS
SCALE: N.T.S. CHK BY:MDB

COBBLESTONE VILLAGE
MIXED USE DEVELOPMENT
TOWN OF ROLESVILLE, WAKE COUNTY, NORTH CAROLINA

SHEET
C5.2

NOT RELEASED FOR CONSTRUCTION OR BID SOLICITATION

R:\2019\19157 - Rolesville Town Center\CIVIL\04 Construction\07 - 19157_Details.dwg, C5.2, 4/20/2022 3:41:07 PM, marc.mueller

TOWN OF ROLESVILLE PROJECT NO.

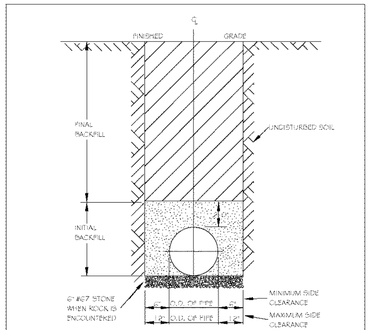

NOTES:
1. TRENCHES REQUIRING SHORING AND BRACING, DIMENSIONS SHALL BE TAKEN FROM THE INSIDE FACE OF THE SHORING AND BRACING.
2. NO ROCKS OR BOULDERS 4" OR LARGER TO BE USED IN INITIAL BACKFILL.
3. ALL BACKFILL MATERIAL SHALL BE SUITABLE NATIVE MATERIAL.
4. BACKFILL SHALL BE TAMPED IN 6" LIFTS IN TRAFFIC AREAS, 12" IN NON-TRAFFIC AREAS.
5. ACHIEVE 90% COMPACTION IN NON-TRAFFIC AREAS, AND 95% COMPACTION IN TRAFFIC AREAS.
6. IF IN EASEMENT 4" TOPSOIL AND 12" CLEAN SELECT FILL MAY BE REQUIRED.
7. NO BOULDERS 6" IN DIAMETER OR GREATER ALLOWED IN FINAL BACKFILL.

CITY OF RALEIGH
DEPARTMENT OF PUBLIC UTILITIES
TRENCH BOTTOM DIMENSIONS & BACKFILLING REQUIREMENTS FOR DUCTILE IRON

DWG. NO.	REVISIONS	DATE	REVISIONS	DATE
S-4	D.W.G.	9-2-99		
	KKH	2-28-00		

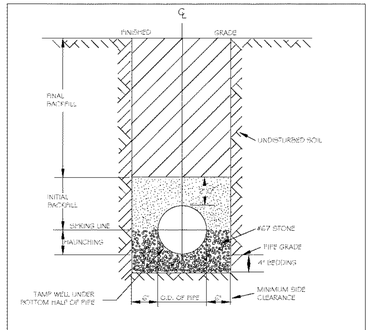

TYPICAL TRENCH BOTTOM DIMENSIONS FOR SDR 35 PVC GRAVITY PIPE

NOTES:
1. FOR TRENCHES REQUIRING SHORING AND BRACING, DIMENSIONS SHALL BE TAKEN FROM THE INSIDE FACE OF THE SHORING AND BRACING.
2. NO ROCKS OR BOULDERS 4" OR LARGER TO BE USED IN INITIAL BACKFILL.
3. ALL BACKFILL MATERIAL SHALL BE SUITABLE NATIVE MATERIAL.
4. BACKFILL SHALL BE TAMPED IN 6" LIFTS IN TRAFFIC AREAS, 12" IN NON-TRAFFIC AREAS.

CITY OF RALEIGH
DEPARTMENT OF PUBLIC UTILITIES
TRENCH BOTTOM DIMENSIONS AND BACKFILLING REQUIREMENTS FOR PVC GRAVITY SEWER MAIN

DWG. NO.	REVISIONS	DATE	REVISIONS	DATE
S-5	TO NOTES	3-1-97	D.W.G.	9-2-99
		7-2-82	KKH	3-30-00

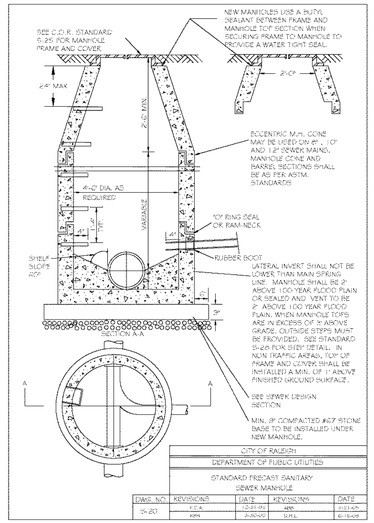

CITY OF RALEIGH
DEPARTMENT OF PUBLIC UTILITIES
STANDARD PRECAST SANITARY SEWER MANHOLE

DWG. NO.	REVISIONS	DATE	REVISIONS	DATE
S-20	Y.C.A.	12-21-05	ABB	1-11-06
	KRH	3-30-00	D.H.L.	6-18-08

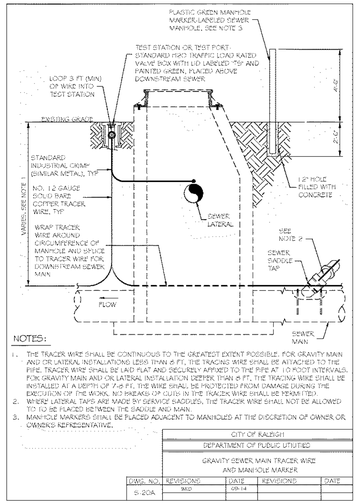

NOTES:
1. THE TRACER WIRE SHALL BE CONTINUOUS TO THE GREATEST EXTENT POSSIBLE. FOR GRAVITY MAIN AND OR LATERAL INSTALLATIONS LESS THAN 6 FT, THE TRACING WIRE SHALL BE ATTACHED TO THE PIPE. TRACER WIRE SHALL BE LAID FLAT AND SECURELY AFFIXED TO THE PIPE AT 10 FOOT INTERVALS. FOR GRAVITY MAIN AND OR LATERAL INSTALLATION DEEPER THAN 6 FT, THE TRACING WIRE SHALL BE INSTALLED AT A DEPTH OF 2'± FT. THE WIRE SHALL BE PROTECTED FROM DAMAGE DURING THE EXECUTION OF THE WORKS. NO INCISIONS OR CUTS IN THE TRACER WIRE SHALL BE PERMITTED.
2. WHERE LATERAL TAPS ARE MADE BY SERVICE SADDLES, THE TRACER WIRE SHALL NOT BE ALLOWED TO BE BE PLACED BETWEEN THE SADDLE AND MAIN.
3. MANHOLE MARKERS SHALL BE PLACED ADJACENT TO MANHOLES AT THE DISCRETION OF OWNER OR OWNERS REPRESENTATIVE.

CITY OF RALEIGH
DEPARTMENT OF PUBLIC UTILITIES
GRAVITY SEWER MAIN TRACER WIRE

DWG. NO.	REVISIONS	DATE	REVISIONS	DATE
S-20A	MKD	09-14		

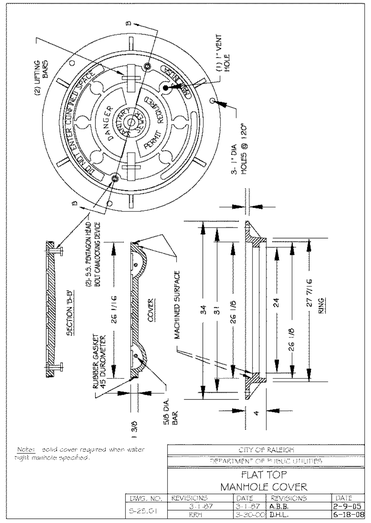

Note: solid cover required when water tight manhole specified.

CITY OF RALEIGH
DEPARTMENT OF PUBLIC UTILITIES
FLAT TOP MANHOLE COVER

DWG. NO.	REVISIONS	DATE	REVISIONS	DATE
S-25.01	3-1-97	3-1-97	A.B.B.	2-9-05
	KKH	3-30-00	D.H.L.	6-18-08

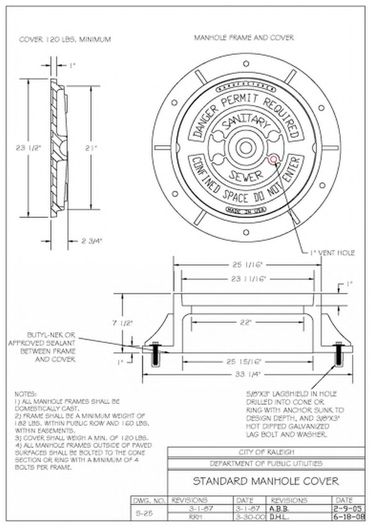

NOTES:
1) ALL MANHOLE FRAMES SHALL BE DOMESTICALLY CAST.
2) FRAME SHALL BE A MINIMUM WEIGHT OF 1,812 LBS. WITHIN PUBLIC ROW AND 1,612 LBS. WITHIN EASEMENTS.
3) COVER SHALL WEIGH A MIN. OF 120 LBS.
4) ALL MANHOLE FRAMES OUTSIDE OF PAVED SURFACES SHALL BE BOLTED TO THE CONE SECTION OR RING WITH A MINIMUM OF 4 BOLTS PER FRAME.

CITY OF RALEIGH
DEPARTMENT OF PUBLIC UTILITIES
STANDARD MANHOLE COVER

DWG. NO.	REVISIONS	DATE	REVISIONS	DATE
S-25	KKH	3-1-97	A.B.B.	2-9-05
		3-30-00	D.H.L.	6-18-08

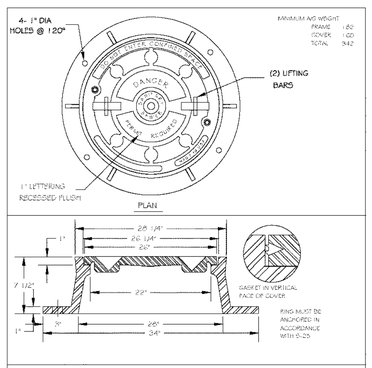

MINIMUM AVG WEIGHT
FRAME 1,60
COVER 1,00
TOTAL 3,42

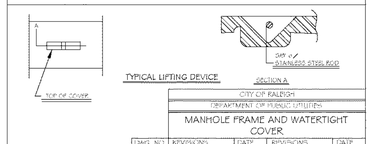

TYPICAL LIFTING DEVICE

CITY OF RALEIGH
DEPARTMENT OF PUBLIC UTILITIES
MANHOLE FRAME AND WATERTIGHT COVER

DWG. NO.	REVISIONS	DATE	REVISIONS	DATE
S-26	3-1-97	3-1-97	ABB	8-29-05
	KKH	3-30-00	D.H.L.	6/18/08

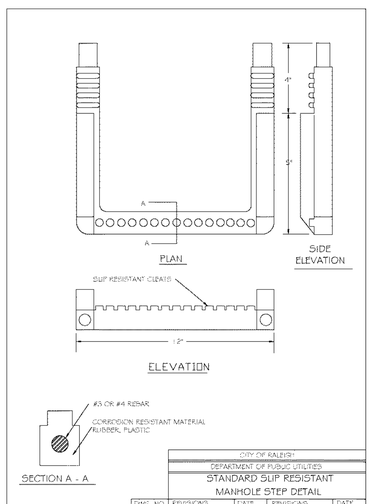

CITY OF RALEIGH
DEPARTMENT OF PUBLIC UTILITIES
STANDARD SLIP RESISTANT MANHOLE STEP DETAIL

DWG. NO.	REVISIONS	DATE	REVISIONS	DATE
S-28	KRH	3-30-00		

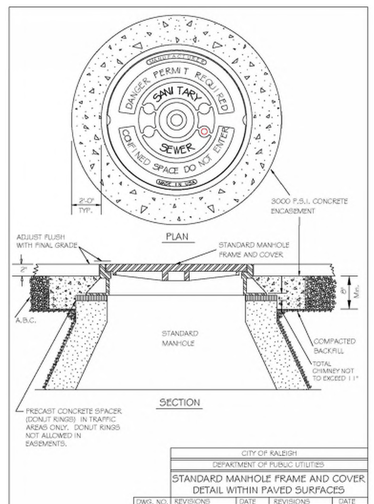

CITY OF RALEIGH
DEPARTMENT OF PUBLIC UTILITIES
STANDARD MANHOLE FRAME AND COVER DETAIL WITHIN PAVED SURFACES

DWG. NO.	REVISIONS	DATE	REVISIONS	DATE
S-29	Y.C.A.	2-21-19	ABB	3-20-04
	KRH	3-30-00	DHL	1-29-07

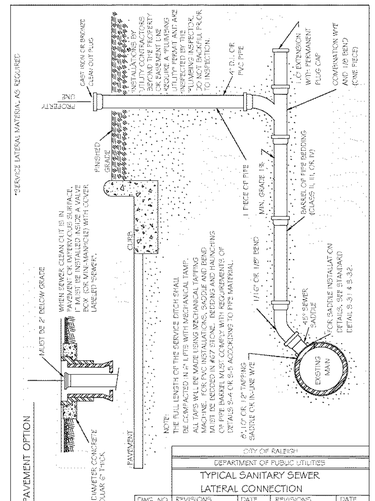

NOTE:
THE FULL LENGTH OF THE SERVICE DITCH SHALL BE COMPACTED IN 12" LIFTS WITH MECHANICAL TAMPING MACHINE. FOR PVC INSTALLATIONS, SADDLE AND BEND MUST BE INSTALLED IN ACCORDANCE WITH THE MANUFACTURERS OF PIPE BARREL MUST COMPLY WITH REQUIREMENTS OF DETAILS S-4 OR S-5 ACCORDING TO PIPE MATERIAL.

CITY OF RALEIGH
DEPARTMENT OF PUBLIC UTILITIES
TYPICAL SANITARY SEWER LATERAL CONNECTION

DWG. NO.	REVISIONS	DATE	REVISIONS	DATE
S-30	Y.C.A.	5-2-12	A.B.B.	4-R-04
	KRH	3-30-00	D.H.L.	6-18-08

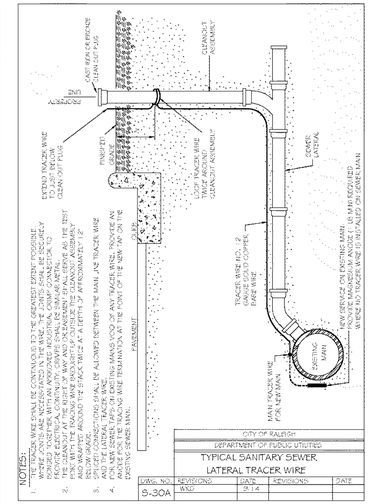

NOTES:
1. THE TRACER WIRE SHALL BE CONTINUOUS TO THE GREATEST EXTENT POSSIBLE. WHERE JOINTS ARE MODIFIED IN THE WIRE, THE JOINTS SHALL BE SECURELY SOLDERED TOGETHER. THE TRACER WIRE SHALL BE LAID FLAT AND SECURELY PROVIDE ELECTRICAL CONTINUITY. SEWER SHALL BE FIBERGLASS MATERIAL.
2. FOR NEW SERVICE, INSTALL TRACER WIRE FROM THE MAIN TO THE CLEAN OUT ASSEMBLY. FOR WORK ON EXISTING MAIN, INSTALL TRACER WIRE FROM THE MAIN TO THE NEW CLEAN OUT ASSEMBLY.
3. SPLICED CONNECTIONS SHALL BE ALLOWED BETWEEN THE MAIN AND TRACER WIRE.
4. FOR NEW SERVICE, TAPS ON EXISTING MAINS WOOD OR ANY TRACER WIRE, PROVIDE AN ANODE (1 LB) MANUFACTURED BY MCDONALD WIRE AND TO MANUFACTURER'S INSTRUCTIONS. FOR WORK ON EXISTING MAIN, INSTALL TRACER WIRE FROM THE MAIN TO THE NEW CLEAN OUT ASSEMBLY.

CITY OF RALEIGH
DEPARTMENT OF PUBLIC UTILITIES
TYPICAL SANITARY SEWER LATERAL TRACER WIRE

DWG. NO.	REVISIONS	DATE	REVISIONS	DATE
S-30A	WKD	5-1-4		

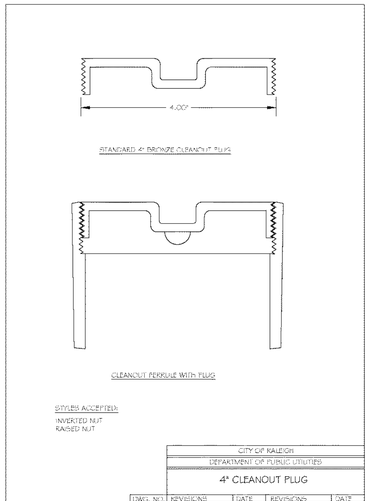

CITY OF RALEIGH
DEPARTMENT OF PUBLIC UTILITIES
4" CLEANOUT PLUG

DWG. NO.	REVISIONS	DATE	REVISIONS	DATE
S-34	D.W.G.	3-1-97	KRH	3-30-00
		5-27-99		

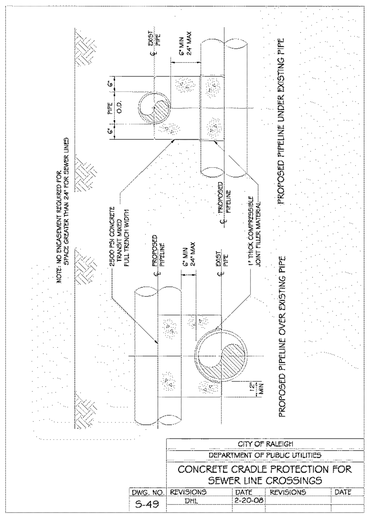

CITY OF RALEIGH
DEPARTMENT OF PUBLIC UTILITIES
CONCRETE CRADLE PROTECTION FOR SEWER LINE CROSSINGS

DWG. NO.	REVISIONS	DATE	REVISIONS	DATE
S-49	DHL	2-20-06		

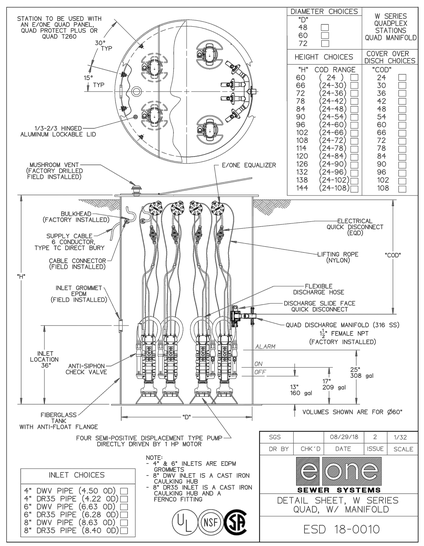

DIAMETER CHOICES "D"	W SERIES QUADPLEX STATIONS QUAD MANIFOLD
48 ☐	
60 ☐	
72 ☐	

HEIGHT CHOICES "H"	COD RANGE	COVER OVER DISCH CHOICES "COD"
60	(24-30) ☐	24 ☐
66	(24-30) ☐	30 ☐
72	(24-36) ☐	36 ☐
78	(24-42) ☐	42 ☐
84	(24-48) ☐	48 ☐
90	(24-54) ☐	54 ☐
96	(24-60) ☐	60 ☐
102	(24-66) ☐	66 ☐
108	(24-72) ☐	72 ☐
114	(24-78) ☐	78 ☐
120	(24-84) ☐	84 ☐
126	(24-90) ☐	90 ☐
132	(24-96) ☐	96 ☐
138	(24-102) ☐	102 ☐
144	(24-108) ☐	108 ☐

INLET CHOICES
4" DWV PIPE (4.50 OD) ☐
4" DR35 PIPE (4.22 OD) ☐
6" DWV PIPE (6.63 OD) ☐
6" DR35 PIPE (6.28 OD) ☐
8" DWV PIPE (8.63 OD) ☐
8" DR35 PIPE (8.40 OD) ☐

NOTE:
- 4" & 6" INLETS ARE EDPM GROMETS
- 6" DWV INLET IS A CAST IRON FERNCO FITTING
- 8" DR35 INLET IS A CAST IRON CAULKING HUB AND A FERNCO FITTING

SGS		08/29/18	2	1/32
DR BY	CHK'D	DATE	ISSUE	SCALE

e/one SEWER SYSTEMS
DETAIL SHEET, W SERIES QUAD, W/ MANIFOLD
ESD 18-0010

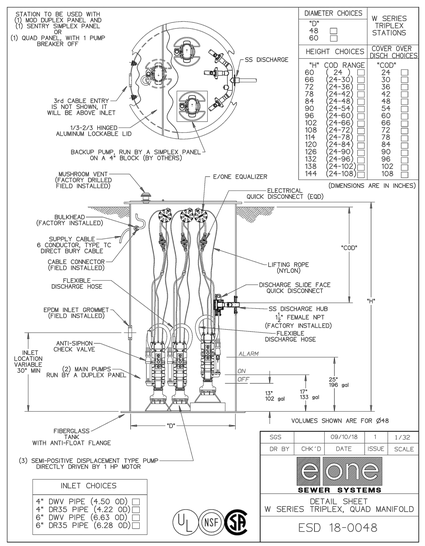

(DIMENSIONS ARE IN INCHES)

DIAMETER CHOICES "D"	W SERIES TRIPLEX STATIONS
48 ☐	
60 ☐	
72 ☐	

HEIGHT CHOICES "H"	COD RANGE	COVER OVER DISCH CHOICES "COD"
60	(24-30) ☐	24 ☐
66	(24-30) ☐	30 ☐
72	(24-36) ☐	36 ☐
78	(24-42) ☐	42 ☐
84	(24-48) ☐	48 ☐
90	(24-54) ☐	54 ☐
96	(24-60) ☐	60 ☐
102	(24-66) ☐	66 ☐
108	(24-72) ☐	72 ☐
114	(24-78) ☐	78 ☐
120	(24-84) ☐	84 ☐
126	(24-90) ☐	90 ☐
132	(24-96) ☐	96 ☐
138	(24-102) ☐	102 ☐
144	(24-108) ☐	108 ☐

INLET CHOICES
4" DWV PIPE (4.50 OD) ☐
4" DR35 PIPE (4.22 OD) ☐
6" DWV PIPE (6.63 OD) ☐
6" DR35 PIPE (6.28 OD) ☐

SGS		09/10/18	1	1/32
DR BY	CHK'D	DATE	ISSUE	SCALE

e/one SEWER SYSTEMS
DETAIL SHEET
W SERIES TRIPLEX, QUAD MANIFOLD
ESD 18-0048

CITY OF RALEIGH - PLANS AUTHORIZED FOR CONSTRUCTION

Electronic Approval: This approval is being issued electronically. This approval is valid only upon the signature of a City of Raleigh Review Officer below. The City will retain a copy of the approved plans. Any work authorized by this approval must proceed in accordance with the plans kept on file with the City. This electronic approval may not be edited once issued. Any modification to this approval once issued will invalidate this approval.

City of Raleigh Development Approval _____

Raleigh Water Review Officer

NORTH CAROLINA PROFESSIONAL SEAL 036808 ENGINEER MARTY D. BIZZELL

04/20/22

BASS, NIXON & KENNEDY, INC.
CONSULTING ENGINEERS
6310 CHAPEL HILL ROAD, SUITE 250, RALEIGH, NC 27607
TELEPHONE: (919)851-4422 FAX: (919)851-8968
CERTIFICATION NUMBERS: NCBELS (C-0110); NCBOLA (C-0267)

NO.	DATE	DESCRIPTION	BY
		REVISIONS	

03-19157 PROGRESS MRM
JOB NO. DATE DRAWN BY

DETAILS

SCALE: N.T.S. CHK BY: MDB

COBBLESTONE VILLAGE
MIXED USE DEVELOPMENT
TOWN OF ROLESVILLE, WAKE COUNTY, NORTH CAROLINA

SHEET C5.3

R:\2019\19157 - Rolesville Town Center\CIVIL\04 Construction\07 - 19157_Details.dwg, C5.3, 4/20/2022 3:41:42 PM, marc.mueller

NOT RELEASED FOR CONSTRUCTION OR BID SOLICITATION

TOWN OF ROLESVILLE PROJECT NO.

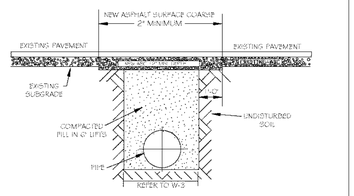

NOTES:
1. THE PAVEMENT CUT SHALL BE DEFINED BY A STRAIGHT EDGE AND CUT WITH AN APPROPRIATE SAW CUT MACHINE.
2. THE TRENCH SUBGRADE MATERIAL SHALL BE BACKFILLED WITH SUITABLE MATERIAL AND COMPACTED TO A DENSITY OF AT LEAST 95% OF THAT OBTAINED BY COMPACTING A SAMPLE OF THE MATERIAL IN ACCORDANCE WITH AASHTO T-99 AS MODIFIED BY NCDOT.
3. THE FINAL 1' OF FILL SHALL CONSIST OF ABC MATERIAL COMPACTED TO A DENSITY EQUAL TO 100% OF THAT OBTAINED BY COMPACTING A SAMPLE OF THE MATERIAL IN ACCORDANCE WITH AASHTO T-180 AS MODIFIED BY NCDOT.
4. THE ENTIRE THICKNESS VERTICAL EDGE OF CUT SHALL BE TACKED.
5. THE SAME DEPTH OF PAVEMENT MATERIAL WHICH EXISTS SHALL BE REINSTALLED, BUT IN NO CASE SHALL THE ASPHALT BE LESS THAN 2" THICK.
6. THE ASPHALT PAVEMENT MATERIAL SHALL BE INSTALLED AND COMPACTED THOROUGHLY WITH A SMOOTH DRUM ROLLER TO ACHIEVE A SMOOTH LEVEL PATCH.
7. REFER TO CITY OF RALEIGH STANDARDS FOR TRENCHES AND PIPE BEDDING, W-3, FOR ADDITIONAL DETAILS.
8. NO HAND PATCHING ALLOWED.
9. PAVEMENT CUTS WITHIN NCDOT ROW SHALL CONFORM TO THE APPROVED ON SITE ENCROACHMENT PERMIT.

CITY OF RALEIGH			
DEPARTMENT OF PUBLIC UTILITIES			
STANDARD ASPHALT PAVEMENT PATCH DETAIL			
DWG. NO.	REVISIONS	DATE	REVISIONS	DATE
W-2	KRH	5-31-00	A.B.B.	4-16-04
	D.W.C.	11-1-99	J.P.B.	10-29-10

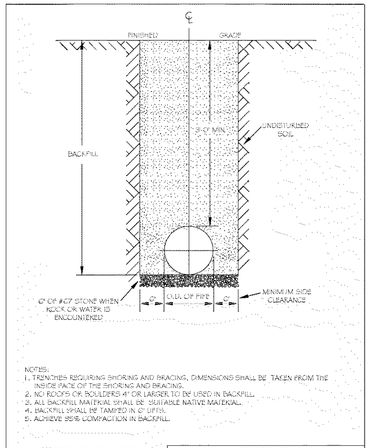

NOTES:
1. TRENCHES REQUIRING SHORING AND BRACING, DIMENSIONS SHALL BE TAKEN FROM THE INSIDE FACE OF THE SHORING AND BRACING.
2. ROCKS OR BOULDERS 4' OR LARGER TO BE USED IN BACKFILL.
3. ALL BACKFILL MATERIAL SHALL BE SUITABLE NATIVE MATERIAL.
4. BACKFILL SHALL BE TAMPED IN 6" LIFTS.
5. ACHIEVE 95% COMPACTION IN BACKFILL.

CITY OF RALEIGH			
DEPARTMENT OF PUBLIC UTILITIES			
TRENCH BOTTOM DIMENSIONS & BACKFILLING REQUIREMENTS FOR DUCTILE IRON			
DWG. NO.	REVISIONS	DATE	REVISIONS	DATE
W-3	KRH	5-31-00	J.P.B.	10-29-10

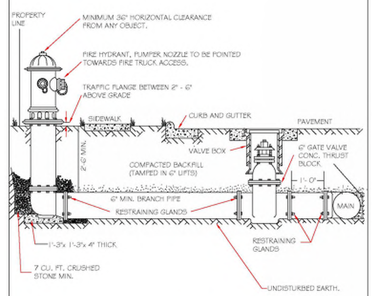

NOTES:
1. FIRE HYDRANT SHALL BE AS MANUFACTURED: MUELLER, AMERICAN DARLING, KENNEDY, MKH, WATEROUS, CLOW, EAST JORDAN IRON WORKS, OR US PIPE.
2. BRANCH PIPE SHALL BE DUCTILE IRON AWWA C150-96.
3. 6" GATE VALVE SHALL BE AWWA C500-96 OPEN LEFT.
4. STEEL RODS AND BOLTS SHALL BE ⅜" HOT DIPPED GALVANIZED.
5. FIRE HYDRANTS WILL BE INSTALLED IN TRUE VERTICAL POSITION. RODS SHALL NOT BE COUPLED MORE THAN ONCE. IF THE LENGTH FROM THE VALVE TO THE HYDRANT EXCEEDS 20' THEN A MECHANICAL RESTRAINING GLAND WITH A REBAR CAGE SHALL BE INSTALLED NO MORE THAN 10' FROM HYDRANT AND POURED IN CONCRETE. FIRE HYDRANTS TO BE LOCATED IN ROW OR 2 FOOT EASEMENT ADJACENT TO ROW

ANYTIME SITE WORK, CONSTRUCTION, ROAD WORK, OR ANY OTHER WORK CHANGES THE GRADE OF THE FIRE HYDRANT, THE PERSON RESPONSIBLE FOR THE WORK IS RESPONSIBLE FOR ADJUSTING THE FIRE HYDRANT TO STAY WITHIN COMPLIANCE.

CITY OF RALEIGH			
DEPARTMENT OF PUBLIC UTILITIES			
STANDARD FIRE HYDRANT INSTALLATION DETAIL			
DWG. NO.	REVISIONS	DATE	REVISIONS	DATE
W-4	ABB	4-6-04	FNF	8/17/09
	DHL	2/1/08		

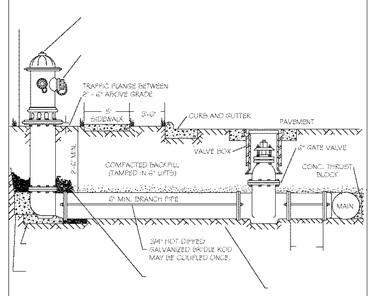

NOTES:
1. FIRE HYDRANT SHALL BE AS MANUFACTURED: MUELLER, AMERICAN DARLING, KENNEDY, MKH, WATEROUS, CLOW, EAST JORDAN IRON WORKS, OR US PIPE.
2. BRANCH PIPE SHALL BE DUCTILE IRON AWWA C150-96.
3. 6" GATE VALVE SHALL BE AWWA C500-96 OPEN LEFT.
4. STEEL RODS AND BOLTS SHALL BE ⅜" HOT DIPPED GALVANIZED.
5. FIRE HYDRANTS WILL BE INSTALLED IN TRUE VERTICAL POSITION. RODS SHALL NOT BE COUPLED MORE THAN ONCE. IF THE LENGTH FROM THE VALVE TO THE HYDRANT EXCEEDS 20' THEN A MECHANICAL RESTRAINING GLAND WITH A REBAR CAGE SHALL BE INSTALLED NO MORE THAN 10' FROM HYDRANT AND POURED IN CONCRETE. FIRE HYDRANTS TO BE LOCATED IN ROW OR 2 FOOT EASEMENT ADJACENT TO ROW

ANYTIME SITE WORK, CONSTRUCTION, ROAD WORK, OR ANY OTHER WORK CHANGES THE GRADE OF THE FIRE HYDRANT, THE PERSON RESPONSIBLE FOR THE WORK IS RESPONSIBLE FOR ADJUSTING THE FIRE HYDRANT TO STAY WITHIN COMPLIANCE.

CITY OF RALEIGH			
DEPARTMENT OF PUBLIC UTILITIES			
STANDARD FIRE HYDRANT INSTALLATION DETAIL			
DWG. NO.	REVISIONS	DATE	REVISIONS	DATE
W-4a	ABB	4-6-04		

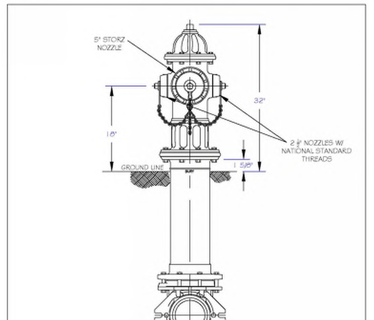

NOTES:
1. RALEIGH PUBLIC HYDRANTS SHALL BE PAINTED SOLID RED.
2. KNIGHTDALE, & ROLESVILLE PUBLIC HYDRANTS SHALL BE PAINTED RED W/SILVER OPERATING NUTS.
3. ZEBULON PUBLIC HYDRANTS SHALL BE PAINTED RED W/ SILVER BONNETS AND OPERATING NUTS.
4. WAKE FOREST AND GARNER, AND WENDELL PUBLIC AND PRIVATE HYDRANTS TO BE PAINTED SAFETY YELLOW W/SILVER CAPS AND OPERATING NUTS.
5. OPERATING NUTS ON HYDRANTS CONNECTED TO PUBLIC MAINS LARGER THAN 12" SHALL BE PAINTED BLACK.

CITY OF RALEIGH			
DEPARTMENT OF PUBLIC UTILITIES			
RALEIGH, GARNER, KNIGHTDALE, ROLESVILLE, WAKE FOREST, WENDELL & ZEBULON			
STANDARD FIRE HYDRANT WITH 5" STORZ PUMPER NOZZLE			
DWG. NO.	REVISIONS	DATE	REVISIONS	DATE
W-5	KRH	5-1-07	ABB	7-21-06
	KRH	3-31-00	DHL	2-18-08

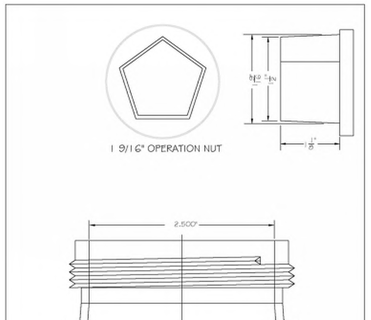

CITY OF RALEIGH			
DEPARTMENT OF PUBLIC UTILITIES			
HYDRANT OPERATING NUT AND 2 1/2" OUTLET THREADS			
DWG. NO.	REVISIONS	DATE	REVISIONS	DATE
W-6	KRH	5-31-00	DHL	2-18-08
	A.B.B.	4-13-04	J.P.B.	11-1-10

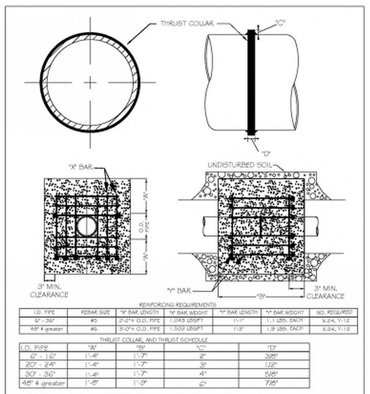

REINFORCING REQUIREMENTS

I.D. PIPE	REBAR SIZE	"A" BAR LENGTH	"A" BAR WEIGHT	"B" BAR LENGTH	"B" BAR WEIGHT	NO. REQUIRED
6" - 36"	#5	2'-2" O.D. PIPE	1.043 LBS/FT	1'-7"	1.1 LBS. EACH	X-24, Y-12
42" & greater	#6	3'-0" O.D. PIPE	1.502 LBS/FT	1'-3"	1.9 LBS. EACH	X-24, Y-12

THRUST COLLAR, AND THRUST SCHEDULE

I.D. PIPE	"A"	"B"	"C"	"D"
6" - 12"	1'-6"	1'-7"	2"	3/8"
20" - 24"	1'-6"	1'-7"	3"	1/2"
30" - 36"	1'-6"	1'-7"	4"	5/8"
42" & greater	1'-6"	1'-9"	6"	7/8"

NOTES:
1. SEE STANDARD DETAIL W-9 FOR THRUST BLOCK LOCATIONS.
2. CONCRETE SHALL BE 3000 PSI AND TRANSIT MIXED.
3. REINFORCING BARS SHALL BE DEFORMED AND TIED TOGETHER.
4. TRENCH BOTTOM WIDTH IN VICINITY OF THRUST BLOCK INSTALLATION SHALL BE THE MINIMUM WIDTH AS SHOWN ON STANDARD DETAIL W-3.
5. BACKFILL TAMPED IN 6" LIFTS PER STANDARD DETAIL W-3.
6. THRUST COLLAR MUST BE FACTORY WELDED ON BOTH SIDES ALONG BOTH EDGES OF COLLAR AROUND CIRCUMFERENCE.

CITY OF RALEIGH			
DEPARTMENT OF PUBLIC UTILITIES			
THRUST BLOCKING DESIGN DATA FOR WATER MAINS			
DWG. NO.	REVISIONS	DATE	REVISIONS	DATE
W-7	KRH	5-2-00	J.P.B.	11-1-10
	D.H.L.	6-18-08		

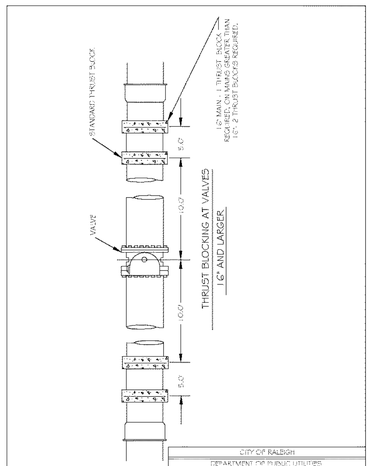

CITY OF RALEIGH			
DEPARTMENT OF PUBLIC UTILITIES			
STANDARD THRUST BLOCK INSTALLATION FOR 16" AND LARGER VALVES AND DEAD END MAINS			
DWG. NO.	REVISIONS	DATE	REVISIONS	DATE
W-8	T.C.A.	4-12-90	D.W.C.	9-7-99
		4-97	KRH	3-31-00

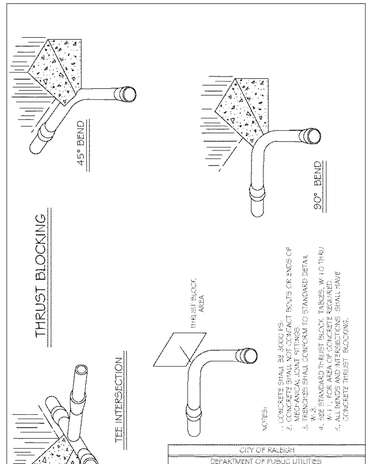

NOTES:
1. CONCRETE SHALL BE 3000 PSI.
2. CONCRETE SHALL NOT CONTACT BOLTS OR ENDS OF MECHANICAL JOINT FITTINGS.
3. TRENCHES SHALL CONFORM TO STANDARD DETAIL W-3.
4. SEE STANDARD THRUST BLOCK TABLES, W-10 THRU W-14 FOR AREA OF CONCRETE REQUIRED.
5. ALL BENDS AND INTERSECTIONS SHALL HAVE CONCRETE THRUST BLOCKING.

CITY OF RALEIGH			
DEPARTMENT OF PUBLIC UTILITIES			
STANDARD THRUST BLOCKING VIEWS			
DWG. NO.	REVISIONS	DATE	REVISIONS	DATE
W-9	D.W.C.	9-7-99	D.H.L.	6-18-08

REACTION BEARING AREAS FOR HORIZONTAL WATER PIPE BENDS
BASED ON TEST PRESSURE OF 200 P.S.I.
ALL AREAS GIVEN IN SQUARE FEET.

SIZE AND DEGREE OF BEND	STATIC THRUST IN POUNDS	MOISTENED DRY CLAY & COLD JOINTS	SOFT CLAY & COLD JOINTS	ORGANIC SAND & TEMPERED JOINTS	SOFT CLAY & TEMPERED JOINTS	SAND, COMPACT DRY & TEMPERED JOINTS	SAND, CLAY DRY & COLD JOINTS	SOFT CLAY & COLD JOINTS	ROCK, TOUGH CLAY & COLD JOINTS
6"									
11 1/4°	1,108	1	1	1	1	1	1	2	1
22 1/2°	2,207	1	2	2	1	1	1	3	1
45°	4,328	2	3	3	1	1	2	5	1
90°	7,996	2	4	5	1	1	2	8	1
PLUG	5,658	2	3	4	1	1	2	6	1
8"									
11 1/4°	1,970	1	1	2	1	1	1	2	1
22 1/2°	3,922	1	2	3	1	1	1	4	1
45°	7,694	2	4	5	1	1	2	8	1
90°	14,215	4	6	9	2	2	4	15	2
PLUG	10,063	3	5	6	2	2	3	10	1
12"									
11 1/4°	4,433	2	3	3	1	1	2	5	1
22 1/2°	8,826	3	5	6	2	2	3	9	1
45°	17,312	5	9	11	3	3	5	18	2
90°	31,983	8	16	19	4	4	8	32	4
PLUG	22,639	6	12	14	3	3	6	23	3
16"									
11 1/4°	7,881	2	4	5	1	1	2	8	1
22 1/2°	15,691	4	8	10	2	2	4	16	2
45°	30,773	8	16	19	4	4	8	31	4
90°	56,861	15	29	35	8	8	15	57	8
PLUG	40,213	10	21	25	5	5	10	41	5

REACTION BEARING AREAS ARE IN SQUARE FEET MEASURED IN A VERTICAL PLANE IN THE TRENCH SIDE AT AN ANGLE OF 90° TO THE THRUST VECTOR.

USE 0 - 90° BEND VALUE FOR HYDRANTS FOR ADDITIONAL SAFETY FACTOR.

CITY OF RALEIGH			
DEPARTMENT OF PUBLIC UTILITIES			
THRUST BLOCKING DESIGN QUANTITY TABLE			
DWG. NO.	REVISIONS	DATE	REVISIONS	DATE
W-10	D.W.C.	6-23-99		

REACTION BEARING AREAS FOR HORIZONTAL WATER PIPE BENDS
BASED ON TEST PRESSURE OF 200 P.S.I.
ALL AREAS GIVEN IN SQUARE FEET.

SIZE AND DEGREE OF BEND	STATIC THRUST IN POUNDS	MOISTENED DRY CLAY & COLD JOINTS	SOFT CLAY & COLD JOINTS	ORGANIC SAND & TEMPERED JOINTS	SOFT CLAY & TEMPERED JOINTS	SAND, COMPACT DRY & TEMPERED JOINTS	SAND, CLAY DRY & COLD JOINTS	SOFT CLAY & COLD JOINTS	ROCK, TOUGH CLAY & COLD JOINTS
24"									
11 1/4°	17,734	5	9	11	3	3	5	18	2
22 1/2°	35,305	9	18	22	5	5	9	36	4
45°	69,252	18	35	42	9	9	18	70	7
90°	127,936	32	64	77	16	16	32	128	13
PLUG	90,478	23	46	55	12	12	23	91	10
30"									
11 1/4°	27,709	7	14	17	4	4	7	2	3
22 1/2°	55,163	14	28	34	7	7	14	56	6
45°	108,206	28	55	65	14	14	28	109	11
90°	199,900	50	100	120	25	25	50	200	20
PLUG	141,372	36	71	85	18	18	36	142	15
36"									
11 1/4°	39,901	10	20	24	5	5	10	40	4
22 1/2°	79,439	20	40	48	10	10	20	80	8
45°	155,816	39	78	94	20	20	39	156	16
90°	287,856	72	144	172	36	36	72	288	29
PLUG	203,579	51	102	122	26	26	51	204	21
48"									
11 1/4°	70,935	18	36	43	9	9	18	71	8
22 1/2°	141,218	35	71	85	18	18	36	142	15
45°	277,207	70	139	166	35	35	70	277	28
90°	511,742	128	256	307	64	64	128	512	52
PLUG	361,911	91	181	217	45	45	91	362	37

REACTION BEARING AREAS ARE IN SQUARE FEET MEASURED IN A VERTICAL PLANE IN THE TRENCH SIDE AT AN ANGLE OF 90° TO THE THRUST VECTOR.

USE 0 - 90° BEND VALUE FOR HYDRANTS FOR ADDITIONAL SAFETY FACTOR.

CITY OF RALEIGH			
DEPARTMENT OF PUBLIC UTILITIES			
THRUST BLOCKING DESIGN QUANTITY TABLE			
DWG. NO.	REVISIONS	DATE	REVISIONS	DATE
W-11	D.W.C.	6-23-99		

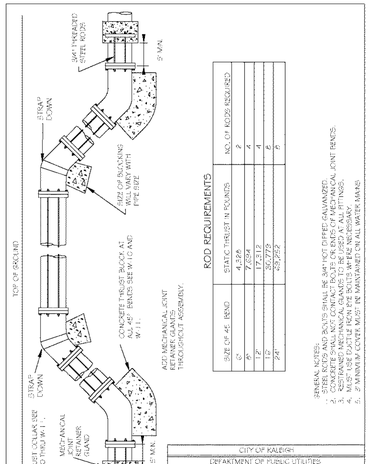

ROD REQUIREMENTS

SIZE OF 45° BEND	STATIC THRUST IN POUNDS	NO. OF RODS REQUIRED
6"	4,328	2
8"	7,694	4
12"	17,312	4
16"	30,773	4
24"	69,252	6

GENERAL NOTES:
1. ALL STEEL RODS AND BOLTS SHALL BE ⅜" HOT DIPPED GALVANIZED.
2. CONCRETE SHALL NOT CONTACT BOLTS OR ENDS OF MECHANICAL JOINT FITTINGS.
3. CONCRETE SHALL BE 3000 PSI.
4. MEET USE DUCTILE IRON PIPE BOTTOM.
5. 2" MINIMUM COVER MUST BE MAINTAINED ON ALL WATER MAINS.

CITY OF RALEIGH			
DEPARTMENT OF PUBLIC UTILITIES			
STANDARD VERTICAL BEND			
DWG. NO.	REVISIONS	DATE	REVISIONS	DATE
W-12	ABB	4-6-04	J.P.B.	11-1-10
	D.H.L.	2-16-08		

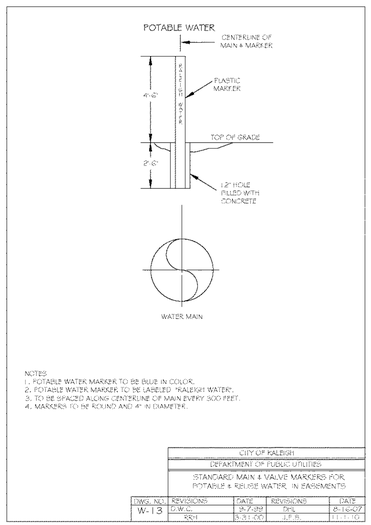

NOTES:
1. POTABLE WATER MARKER TO BE BLUE IN COLOR.
2. POTABLE WATER MARKER TO BE LABELED "RALEIGH WATER".
3. TO BE SPACED ALONG CENTERLINE OF MAIN EVERY 300 FEET.
4. MARKERS TO BE ROUND AND 4" IN DIAMETER.

CITY OF RALEIGH			
DEPARTMENT OF PUBLIC UTILITIES			
STANDARD MAIN & VALVE MARKERS FOR POTABLE & RELIKE WATER - IN EASEMENTS			
DWG. NO.	REVISIONS	DATE	REVISIONS	DATE
W-13	D.W.C.	9-7-99	DHL	6-16-07
	KRH	3-31-00	J.P.B.	11-1-10

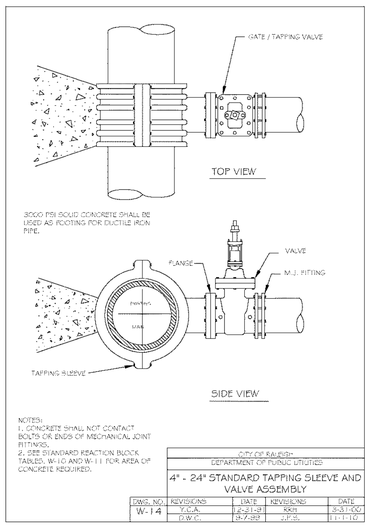

3000 PSI SOLID CONCRETE SHALL BE USED AS FOOTING FOR DUCTILE IRON PIPE.

NOTES:
1. CONCRETE SHALL NOT CONTACT BOLTS OR ENDS OF MECHANICAL JOINT FITTINGS.
2. SEE STANDARD REACTION BLOCK TABLES, W-10 AND W-11 FOR AREA OF CONCRETE REQUIRED.

CITY OF RALEIGH			
DEPARTMENT OF PUBLIC UTILITIES			
4" - 24" STANDARD TAPPING SLEEVE AND VALVE ASSEMBLY			
DWG. NO.	REVISIONS	DATE	REVISIONS	DATE
W-14	T.C.A.	12-21-87	KRH	3-31-00
	D.W.C.	9-7-99	J.P.B.	11-1-10

CITY OF RALEIGH - PLANS AUTHORIZED FOR CONSTRUCTION

Electronic Approval: This approval is being issued electronically. This approval is valid only upon the signature of a City of Raleigh Review Officer below. The City will retain a copy of the approved plans. Any work authorized by this approval must proceed in accordance with the plans kept on file with the City. This electronic approval may not be edited once issued. Any modification to this approval once issued will invalidate this approval.

City of Raleigh Development Approval _____

Raleigh Water Review Officer

NORTH CAROLINA PROFESSIONAL SEAL 036808 ENGINEER MARTY D. BIZZELL

04/20/22

R:\2019\19157 - Rolesville Town Center\CIVIL\04 Construction\07 - 19157_Details.dwg, C5.4, 4/20/2022 3:42:11 PM, marc.mueller

BASS, NIXON & KENNEDY, INC.
CONSULTING ENGINEERS
6310 CHAPEL HILL ROAD, SUITE 250, RALEIGH, NC 27607
TELEPHONE: (919)851-4422 FAX: (919)851-8968
CERTIFICATION NUMBERS: NCBELS (C-0110); NCBOLA (C-0267)

NO.	DATE	DESCRIPTION	BY
		REVISIONS	

PROGRESS MRM
DATE
DRAWN BY
JOB NO. 03-19157
DETAILS
SCALE: N.T.S.
CHK BY: MDB

COBBLESTONE VILLAGE
MIXED USE DEVELOPMENT
TOWN OF ROLESVILLE, WAKE COUNTY, NORTH CAROLINA

SHEET C5.4

TOWN OF ROLESVILLE PROJECT NO.

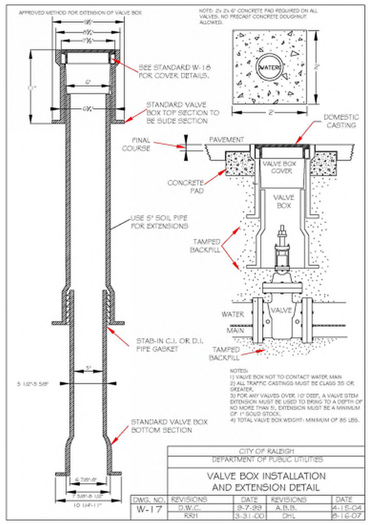

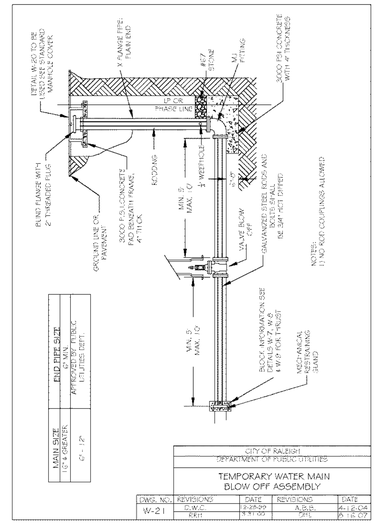

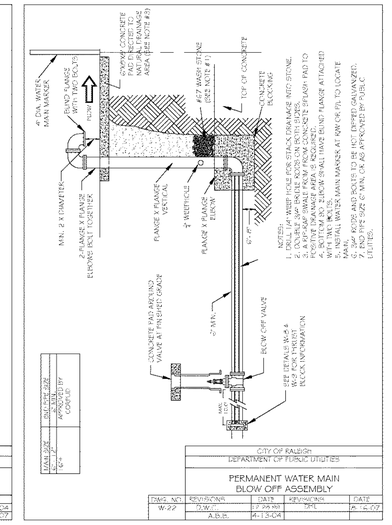

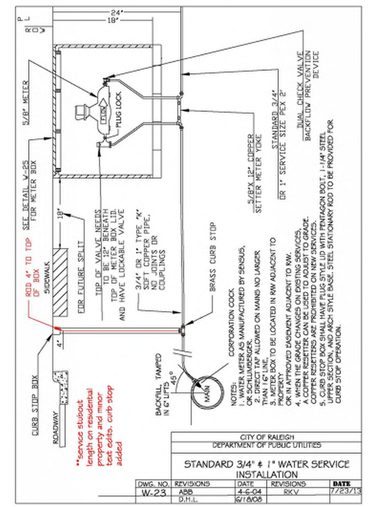

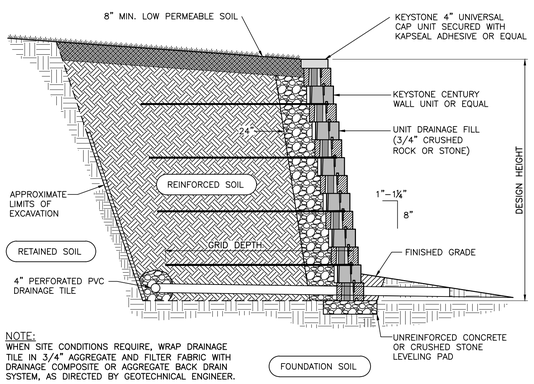

TYPICAL BLOCK WALL SECTION

CENTURY WALL UNIT – 1" SETBACK

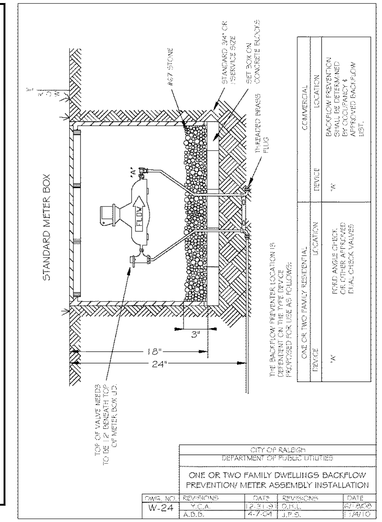

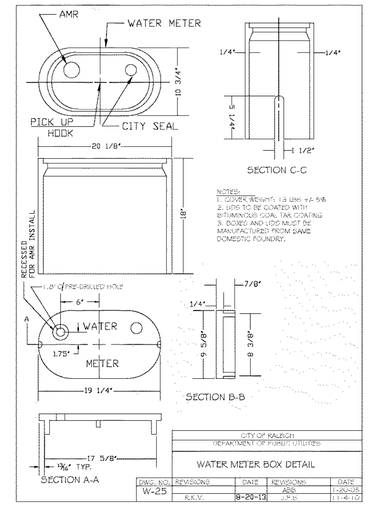

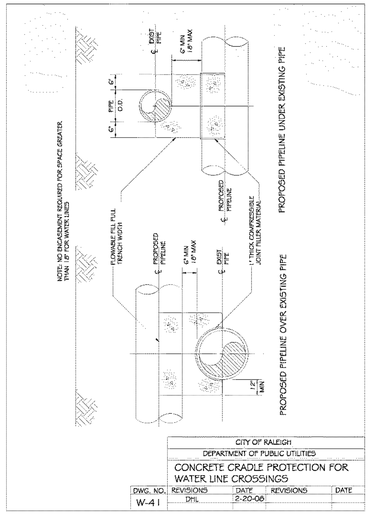

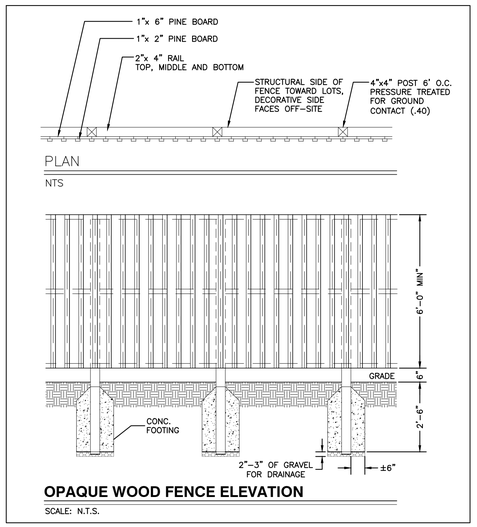

OPAQUE WOOD FENCE ELEVATION

SCALE: N.T.S.

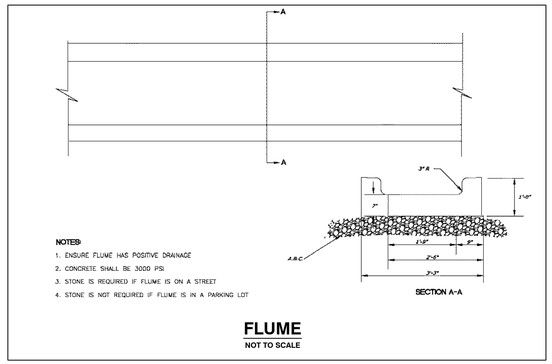

FLUME

NOT TO SCALE

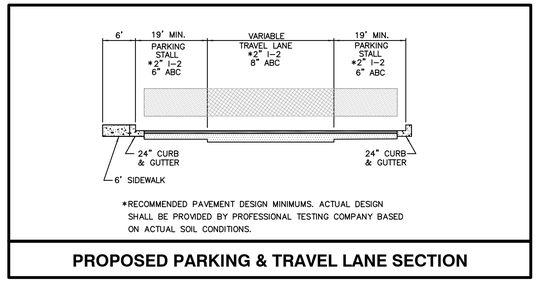

PROPOSED PARKING & TRAVEL LANE SECTION

CITY OF RALEIGH - PLANS AUTHORIZED FOR CONSTRUCTION

Electronic Approval: This approval is being issued electronically. This approval is valid only upon the signature of a City of Raleigh Review Officer below. The City will retain a copy of the approved plans. Any work authorized by this approval must proceed in accordance with the plans kept on file with the City. This electronic approval may not be edited once issued. Any modification to this approval once issued will invalidate this approval.

City of Raleigh Development Approval _____

Raleigh Water Review Officer

NORTH CAROLINA PROFESSIONAL SEAL 036908 ENGINEER MARTY D. BIZZELL

04/20/22

BASS, NIXON & KENNEDY, INC.
CONSULTING ENGINEERS
6310 CHAPEL HILL ROAD, SUITE 250, RALEIGH, NC 27607
TELEPHONE: (919)851-4422 FAX: (919)851-8968
CERTIFICATION NUMBERS: NCBELS (C-0110); NCBOLA (C-0267)

NO.	DATE	DESCRIPTION	BY
		REVISIONS	

03-19157 PROGRESS MRM
JOB NO. DATE DRAWN BY

DETAILS

SCALE: N.T.S. CHK BY:MDB

COBBLESTONE VILLAGE
MIXED USE DEVELOPMENT
TOWN OF ROLESVILLE, WAKE COUNTY, NORTH CAROLINA

SHEET C5.5

TOWN OF ROLESVILLE PROJECT NO.

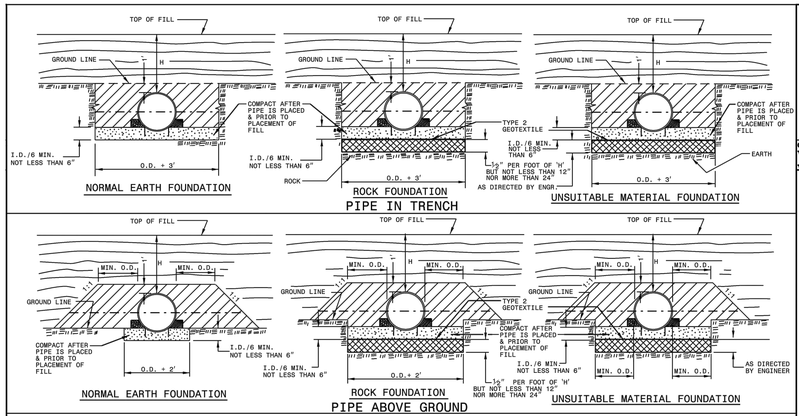

GENERAL NOTES:

I.D. = THE MAXIMUM HORIZONTAL INSIDE DIAMETER DIMENSION.

O.D. = THE MAXIMUM HORIZONTAL OUTSIDE DIAMETER DIMENSION.

H = THE FILL HEIGHT MEASURED VERTICALLY AT ANY POINT ALONG THE PIPE FROM THE TOP OF THE PIPE TO THE TOP OF THE EMBANKMENT AT THAT POINT.

TAKE CARE TO FULLY COMPACT HAUNCH ZONE OF PIPE BACKFILL.

LOOSELY PLACED SELECT MATERIAL CLASS III OR CLASS II, TYPE 1 FOR PIPE BEDDING. LEAVE SECTION DIRECTLY BENEATH PIPE UNCOMPACTED AS PIPE SEATING AND BACKFILL WILL ACCOMPLISH COMPACTION.

DO NOT OPERATE HEAVY EQUIPMENT OVER ANY PIPE CULVERT UNTIL THE PIPE CULVERT HAS BEEN PROPERLY BACKFILLED AND COVERED WITH AT LEAST 3 FEET OF APPROVED MATERIAL.

SPRINGLINE OF PIPE

SELECT BACKFILL MATERIAL CLASS III OR CLASS II, TYPE 1 ABOVE AND BELOW SPRINGLINE.

APPROVED SUITABLE LOCAL MATERIAL.

UNDISTURBED EARTH MATERIAL

SELECT MATERIAL CLASS V OR VI FOR FOUNDATION CONDITIONING. ENCAPSULATE WITH TYPE 2 GEOTEXTILE AS DIRECTED BY THE ENGINEER.

1-18 STATE OF NORTH CAROLINA DEPT. OF TRANSPORTATION DIVISION OF HIGHWAYS RALEIGH, N.C.

ROADWAY STANDARD DRAWING FOR
METHOD OF PIPE INSTALLATION
FLEXIBLE PIPE

SHEET 1 OF 3
300.01

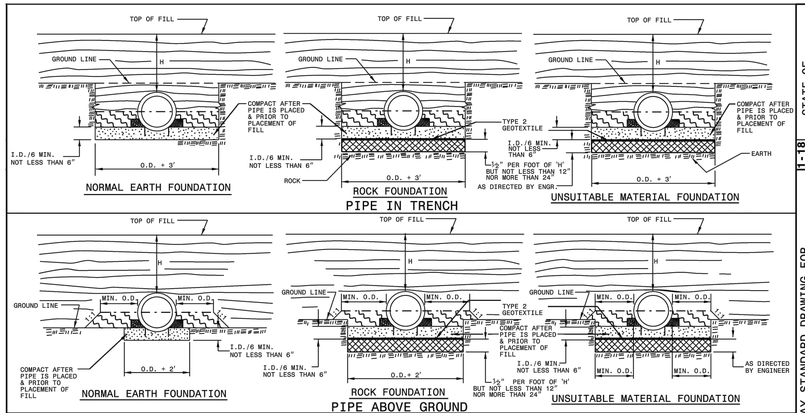

GENERAL NOTES:

I.D. = THE MAXIMUM HORIZONTAL INSIDE DIAMETER DIMENSION.

O.D. = THE MAXIMUM HORIZONTAL OUTSIDE DIAMETER DIMENSION.

H = THE FILL HEIGHT MEASURED VERTICALLY AT ANY POINT ALONG THE PIPE FROM THE TOP OF THE PIPE TO THE TOP OF THE EMBANKMENT AT THAT POINT.

TAKE CARE TO FULLY COMPACT HAUNCH ZONE OF PIPE BACKFILL.

LOOSELY PLACED SELECT MATERIAL CLASS III OR CLASS II, TYPE 1 FOR PIPE BEDDING. LEAVE SECTION DIRECTLY BENEATH PIPE UNCOMPACTED AS PIPE SEATING AND BACKFILL WILL ACCOMPLISH COMPACTION.

DO NOT OPERATE HEAVY EQUIPMENT OVER ANY PIPE CULVERT UNTIL THE PIPE CULVERT HAS BEEN PROPERLY BACKFILLED AND COVERED WITH AT LEAST 3 FEET OF APPROVED MATERIAL.

SPRINGLINE OF PIPE

SELECT BACKFILL MATERIAL CLASS III OR CLASS II, BELOW SPRINGLINE.

APPROVED SUITABLE LOCAL MATERIAL ABOVE SPRINGLINE.

UNDISTURBED EARTH MATERIAL

SELECT MATERIAL CLASS V OR VI FOR FOUNDATION CONDITIONING. ENCAPSULATE WITH TYPE 2 GEOTEXTILE AS DIRECTED BY THE ENGINEER.

1-18 STATE OF NORTH CAROLINA DEPT. OF TRANSPORTATION DIVISION OF HIGHWAYS RALEIGH, N.C.

ROADWAY STANDARD DRAWING FOR
METHOD OF PIPE INSTALLATION
RIGID PIPE

SHEET 2 OF 3
300.01

FLEXIBLE PIPE

Round Corrugated Steel Pipe
2 2/3 x ½ corrugation **

Diameter (inches)	Minimum cover (inches)	Maximum Height of Cover (feet) (Ga) 16	14	12	10	8
12	12	204	256			
15	12	162	204			
18	12	135	169	239		
21	12	115	145	204		
24	12	100	126	178		
30	12	79	100	142		
36	12	65	83	117	152	
42	12	55	70	100	130	160
48	12	48	61	87	113	139
54	12		54	77	100	123
60	12			69	90	111
66	12				81	100
72	12				74	91
78	12					81
84	12					69

Round Corrugated Aluminum Pipe
2 2/3 x ½ corrugation **

Diameter (inches)	Minimum cover (inches)	Maximum Height of Cover (feet) (Ga) 16	14	12	10	8
12	12	123	155	218	281	344
15	12	98	123	174	224	275
18	12	81	102	144	187	228
21	12	69	87	123	160	195
24	12	60	76	108	139	171
27	12		67	95	123	151
30	12		60	85	111	136
36	12		50	71	92	113
42	12			60	78	96
48	12			52	68	84
54	12			46	50	74
60	12				50	62
66	12					51
72	12					41

** FOR DIFFERENT CORRUGATIONS AND ARCH PIPES REFER TO ROADWAY DESIGN MANUAL OR MANUFACTURERS SPECIFICATION.

HDPE - * (Minimum fill) 2' for pipe diameters ≥ 12" and ≤ 60"
* (Maximum fill) 20' for pipe diameters ≤ 24"
17' for pipe diameters ≥ 30" and ≤ 60"

PVC - * (Minimum fill) 2' for pipe diameters ≥ 12" and ≤ 36"
* (Maximum fill) 30' for pipe diameters ≥ 12" and ≤ 36"

* FILL HEIGHT IS MEASURED FROM THE TOP OF THE PIPE TO THE BOTTOM OF THE PAVEMENT STRUCTURE

REFER TO THE FOLLOWING FOR PIPE SPECIFICATIONS

CSP - AASHTO M36
CAAP - AASHTO M196
HDPE - AASHTO M294
PVC - ASTM F949 or AASHTO M304

NOTES: FILL HEIGHTS SHOWN WERE CALCULATED USING AASHTO LRFD BRIDGE DESIGN SPECIFICATIONS

1' MINIMUM COVER FOR ALL SIDE DRAIN PIPE IN ACCORDANCE WITH THE STANDARD SPECIFICATIONS

RIGID PIPE

RCP - * (Minimum fill) 1' for Class IV & CLASS V
2' for Class III & Class II

* (Maximum fill) 10' - Class II pipe
20' - Class III pipe
30' - Class IV pipe
40' - Class V pipe

(For fills > 40' & < 80' use LRFD Direct Design Method)

* FILL HEIGHT IS MEASURED FROM THE TOP OF THE PIPE TO THE BOTTOM OF THE PAVEMENT STRUCTURE

REFER TO THE FOLLOWING FOR PIPE SPECIFICATIONS

RCP - AASHTO M170

NOTES: FILL HEIGHTS SHOWN WERE CALCULATED USING AASHTO LRFD BRIDGE DESIGN SPECIFICATIONS

1' MINIMUM COVER FOR ALL SIDE DRAIN PIPE IN ACCORDANCE WITH THE STANDARD SPECIFICATIONS

1-18 STATE OF NORTH CAROLINA DEPT. OF TRANSPORTATION DIVISION OF HIGHWAYS RALEIGH, N.C.

ROADWAY STANDARD DRAWING FOR
METHOD OF PIPE INSTALLATION
FILL HEIGHT TABLES

SHEET 3 OF 3
300.01

CITY OF RALEIGH - PLANS AUTHORIZED FOR CONSTRUCTION

Electronic Approval: This approval is being issued electronically. This approval is valid only upon the signature of a City of Raleigh Review Officer below. The City will retain a copy of the approved plans. Any work authorized by this approval must proceed in accordance with the plans kept on file with the City. This electronic approval may not be edited once issued. Any modification to this approval once issued will invalidate this approval.

City of Raleigh Development Approval _____

Raleigh Water Review Officer

NORTH CAROLINA PROFESSIONAL SEAL 036908 ENGINEER MARTY D. BIZZELL

04/20/22

BNK

BASS, NIXON & KENNEDY, INC.
CONSULTING ENGINEERS
6310 CHAPEL HILL ROAD, SUITE 250, RALEIGH, NC 27607
TELEPHONE: (919)851-4422 FAX: (919)851-8968
CERTIFICATION NUMBERS: NCBELS (C-0110); NCBOLA (C-0267)

NO.	DATE	DESCRIPTION	BY

REVISIONS

03-19157 PROGRESS MRM
JOB NO. DATE DRAWN BY

DETAILS

SCALE: N.T.S. CHK BY:MDB

COBBLESTONE VILLAGE
MIXED USE DEVELOPMENT
TOWN OF ROLESVILLE, WAKE COUNTY, NORTH CAROLINA

SHEET C5.6

TOWN OF ROLESVILLE PROJECT NO.

Stantec
Stantec Consulting Services Inc.
801 Jones Franklin Road
Suite 300
Raleigh, NC 27606
Tel. (919) 851-6866
Fax. (919) 851-7024
www.stantec.com
License No. F-0672

SUNGATE DESIGN GROUP, P.A.
905 JONES FRANKLIN ROAD
RALEIGH, NORTH CAROLINA 27606
NC COA No. C-0890

PROJECT REFERENCE NO.	SHEET NO.
U-6241	10
R/W SHEET NO.	

ROADWAY DESIGN ENGINEER	HYDRAULICS ENGINEER
DocuSigned by: Michael D. Lindgren 2/10/2022 12:47:00 AM PST 1E4F3D0A4F1F4A8	DocuSigned by: Joshua G. Dalton 2/10/2022 12:49:56 PM PST 1E4F3D0A4F1F4A8
NORTH CAROLINA PROFESSIONAL SEAL 025513 ENGINEER MICHAEL D. LINDGREN	NORTH CAROLINA PROFESSIONAL SEAL 26971 ENGINEER JOSHUA G. DALTON
2/10/2022	2/10/2022

DOCUMENT NOT CONSIDERED FINAL UNLESS ALL SIGNATURES COMPLETED

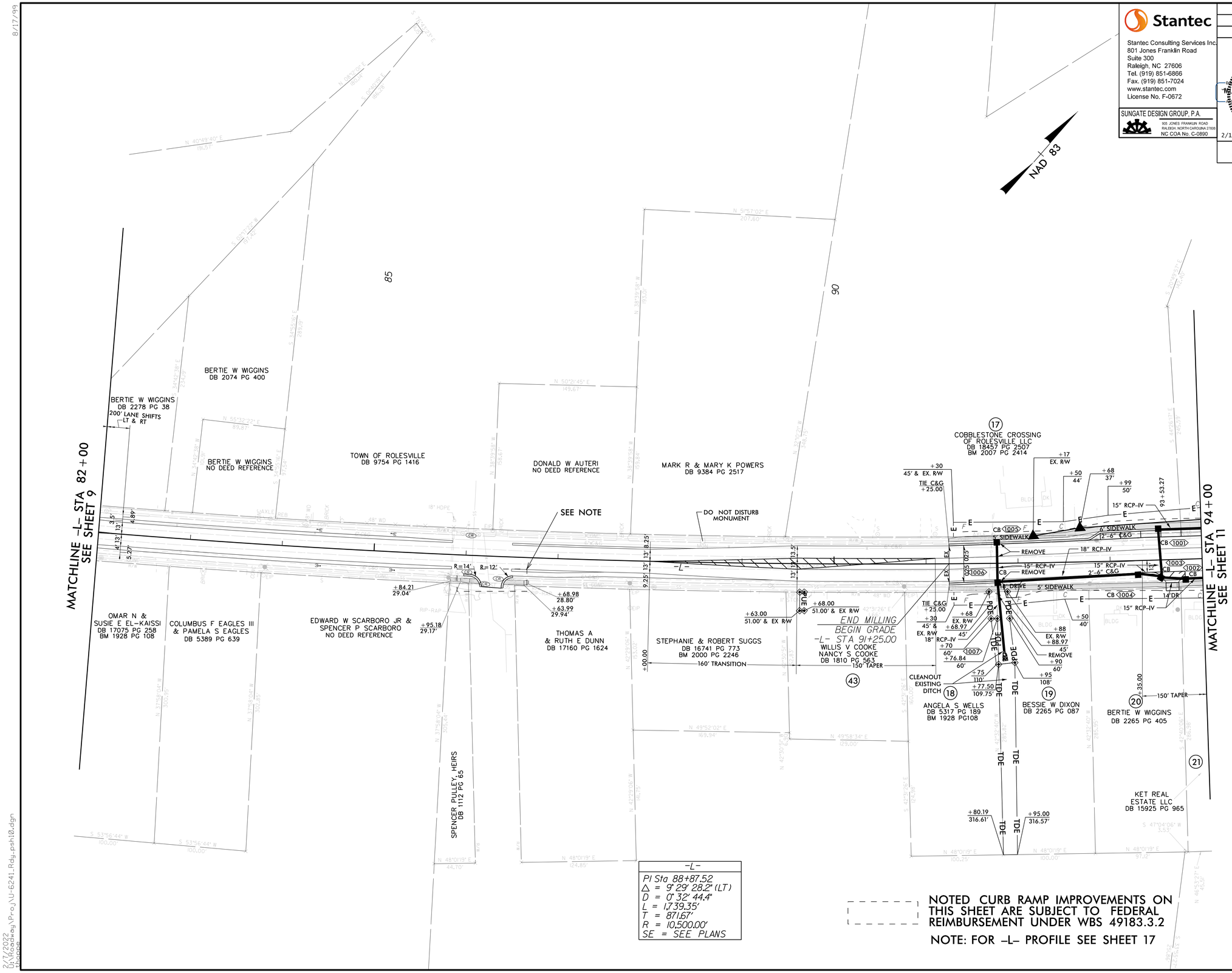

Stantec
Stantec Consulting Services Inc.
801 Jones Franklin Road
Suite 300
Raleigh, NC 27606
Tel. (919) 851-6866
Fax. (919) 851-7024
www.stantec.com
License No. F-0672

SUNGATE DESIGN GROUP, P.A.
905 JONES FRANKLIN ROAD
RALEIGH, NORTH CAROLINA 27609
NC COA No. C-0890

PROJECT REFERENCE NO.	SHEET NO.
U-6241	11
R/W SHEET NO.	

ROADWAY DESIGN ENGINEER: NORTH CAROLINA PROFESSIONAL SEAL 025513 ENGINEER MICHAEL D. LINDGREN — 2/8/2022

HYDRAULICS ENGINEER: NORTH CAROLINA PROFESSIONAL SEAL 26971 ENGINEER JOSHUA G. DALTON — 2/8/2022

DOCUMENT NOT CONSIDERED FINAL UNLESS ALL SIGNATURES COMPLETED

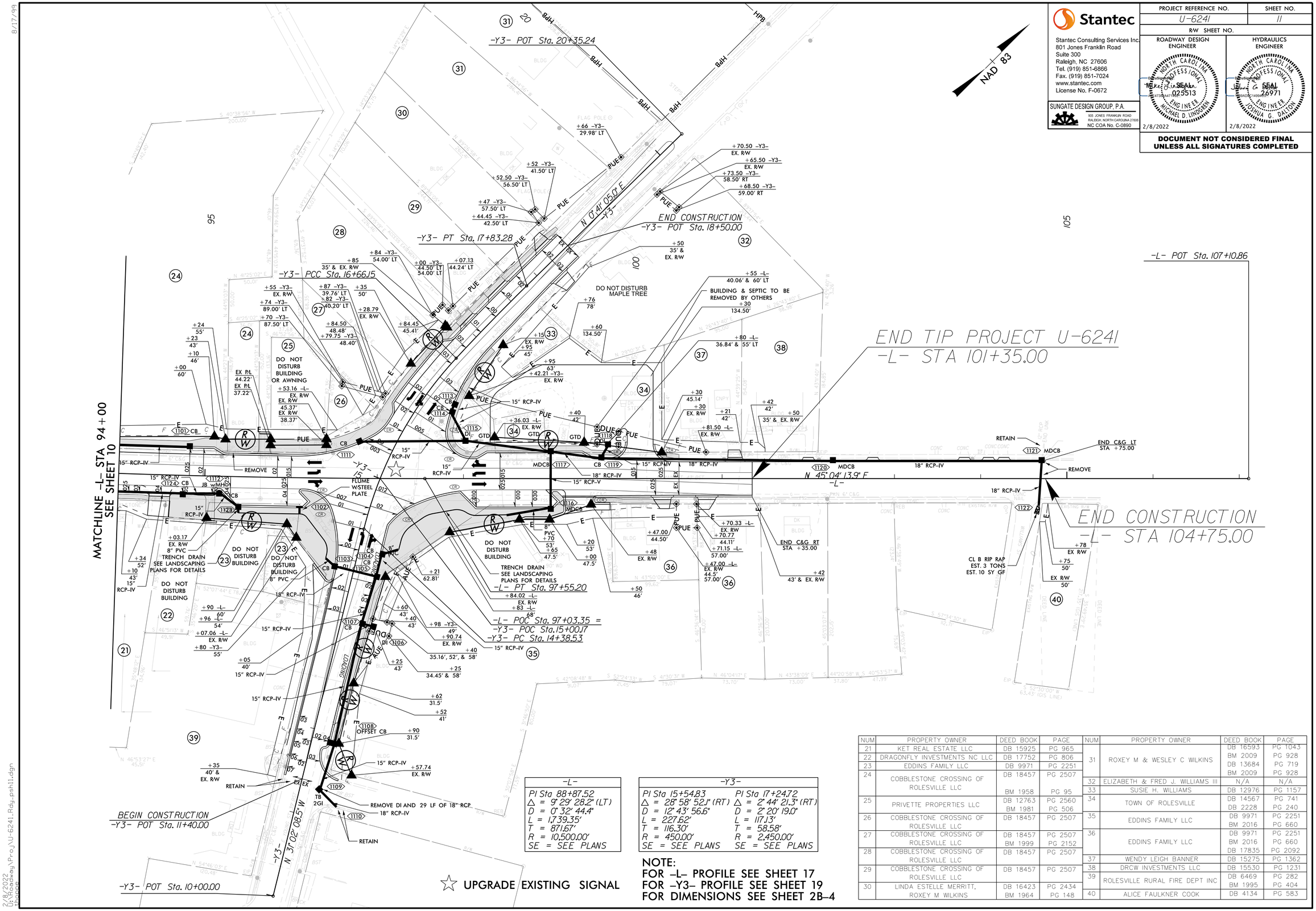

-L-
PI Sta 88+87.52
Δ = 9° 29' 28.2" (LT)
D = 0° 32' 44.4"
L = 1,739.35'
T = 871.67'
R = 10,500.00'
SE = SEE PLANS

-Y3-	
PI Sta 15+54.83	PI Sta 17+24.72
Δ = 28° 58' 52.1" (RT)	Δ = 2° 44' 21.3" (RT)
D = 12° 43' 56.6"	D = 2° 20' 19.0"
L = 227.62'	L = 117.13'
T = 116.30'	T = 58.58'
R = 450.00'	R = 2,450.00'
SE = SEE PLANS	SE = SEE PLANS

NOTE:
FOR -L- PROFILE SEE SHEET 17
FOR -Y3- PROFILE SEE SHEET 19
FOR DIMENSIONS SEE SHEET 2B-4

NUM	PROPERTY OWNER	DEED BOOK	PAGE
21	KET REAL ESTATE LLC	DB 15925	PG 965
22	DRAGONFLY INVESTMENTS NC LLC	DB 17752	PG 806
23	EDDINS FAMILY LLC	DB 9971	PG 2251
24	COBBLESTONE CROSSING OF ROLESVILLE LLC	DB 18457 BM 1958	PG 2507 PG 95
25	PRIVETTE PROPERTIES LLC	DB 12763 BM 1981	PG 2560 PG 506
26	COBBLESTONE CROSSING OF ROLESVILLE LLC	DB 18457	PG 2507
27	COBBLESTONE CROSSING OF ROLESVILLE LLC	DB 18457 BM 1999	PG 2507 PG 2152
28	COBBLESTONE CROSSING OF ROLESVILLE LLC	DB 18457	PG 2507
29	COBBLESTONE CROSSING OF ROLESVILLE LLC	DB 18457	PG 2507
30	LINDA ESTELLE MERRITT, ROXEY M WILKINS	DB 16423 BM 1964	PG 2434 PG 148

NUM	PROPERTY OWNER	DEED BOOK	PAGE
31	ROXEY M & WESLEY C WILKINS	DB 16593 BM 2009 DB 13684 BM 2009	PG 1043 PG 928 PG 719 PG 928
32	ELIZABETH & FRED J. WILLIAMS III	N/A	N/A
33	SUSIE H. WILLIAMS	DB 12976	PG 1157
34	TOWN OF ROLESVILLE	DB 14567 DB 2228	PG 741 PG 240
35	EDDINS FAMILY LLC	DB 9971 BM 2016	PG 2251 PG 660
36	EDDINS FAMILY LLC	DB 9971 BM 2016 DB 17835	PG 2251 PG 660 PG 2092
37	WENDY LEIGH BANNER	DB 15275	PG 1362
38	DRCW INVESTMENTS LLC	DB 15530	PG 1231
39	ROLESVILLE RURAL FIRE DEPT INC	DB 6469 BM 1995	PG 282 PG 404
40	ALICE FAULKNER COOK	DB 4134	PG 583