V1 - CD 22-05

THE POINT - PHASES 11-13

EAST YOUNG STREET
ROLESVILLE, NORTH CAROLINA

CONSTRUCTION DRAWINGS

PROJECT NUMBER: AWH-20000
DATE: OCTOBER 27, 2022

15.4.5 - Streets

15.4.5.1
Type of Street Required All subdivision lots shall abut at least 20 feet on a public street. All public streets shall be dedicated to the Town of Rolesville, the State of North Carolina or the public as determined appropriate by the Board of Commissioners of the Town of Rolesville. All public streets shall be built to the standards of this ordinance and all other applicable standards of the Town of Rolesville and the North Carolina Department of Transportation. Public streets not dedicated to the Town which are eligible for acceptance into the State Highway System shall be constructed to the standards necessary to be put on the State Highway System or the standards in this ordinance, whichever is stricter, in regard to each particular item and shall be put on such system. Streets not dedicated to the Town which are not eligible to be put on the State Highway System because there are too few lots or residences shall, nevertheless, be dedicated to the public and shall be in accordance with the standards in this ordinance or the standards necessary to be put on the State Highway System, whichever is stricter in regard to each particular item, so as to be eligible to be put on the system at a later date. A written maintenance agreement with provisions for maintenance of the street until it is put on the State System shall be included with the final plat.

15.4.5.2
Subdivision Street Disclosure Statement All streets shown on the final plat shall be designated in accordance with G.S. § 136-102.6 and designation as public shall be conclusively presumed an offer of dedication to the public. Where streets are dedicated to the public but not accepted into a municipal or the State system, before lots are sold, a statement explaining the status of the street shall be included with the final plat.

PARCEL OWNER LIST

PIN	OWNER	AREA
1768044257	ASHTON RALEIGH RESIDENTIAL, LLC 5711 SIX FORKS ROAD, SUITE 300 RALEIGH, NC 27609	108.49 AC.
1768068057	ASHTON RALEIGH RESIDENTIAL, LLC 5711 SIX FORKS ROAD, SUITE 300 RALEIGH, NC 27609	104.19 AC.
1768067597	ASHTON RALEIGH RESIDENTIAL, LLC 5711 SIX FORKS ROAD, SUITE 300 RALEIGH, NC 27609	3.74 AC.

DEVELOPER/OWNER

ASHTON RALEIGH RESIDENTIAL, LLC.
5711 SIX FORKS ROAD, SUITE 300
RALEIGH, NC 27609
919-232-3695

ATTN: BOB MISHLER

SURVEY BY:

BATEMAN CIVIL SURVEY COMPANY
2424 RELIANCE AVENUE, APEX, NC 27539

TOPOGRAPHIC DECEMBER 22, 2019
ALTA SURVEY DECEMBER 12, 2019

STEVEN P CARSON, PLS
NC LICENSE # 4752
919-577-1081

SURVEY NOTES

1. THE PROPERTY LIES IN ZONE "X" PER NATIONAL FLOOD INSURANCE PROGRAM RATE MAP 3720175800J & 3720176800J DATES 05/02/2006.
2. ALL DISTANCES ARE HORIZONTAL GROUND DISTANCES AND ALL BEARINGS ARE BASED ON OBSERVED GPS CONTROL. NAD 83 / NSRS 2011 / STATE PLANE COORDINATES.
3. SUBJECT PARCEL ZONED R & PUD PER WAKE COUNTY GIS.
4. SURVEY WAS PREPARED BY BATEMAN CIVIL SURVEY COMPANY UNDER THE SUPERVISION OF STEVEN P. CARSON, PLS. FIELD WORK WAS COMPLETED DEC 3 - 21, 2018.
5. AREAS COMPUTER BY COORDINATE METHOD.
6. SANITARY SEWER LINE EASEMENT WAS CREATED BASED ON CENTER LINES ON MANHOLES USING FIELD EVIDENCE.
7. NO CEMETERIES OBSERVED AS A RESULTS OF THE SURVEY.
8. BUILDING ARE AS SHOWN ON SURVEY.

IMPERVIOUS SUMMARY

Land Use	Area (sf)	Area (ac)
Roadway Area	131,688	3.02
Lots (Open)	232,350	5.33
Lots (Impervious)	307,999	7.07
Sidewalk / Patio	66,402	1.52
Open	688,639	15.81
Wooded	516,413	11.86
Pond	33,780	0.78
Total	**1,977,270**	**45.39**

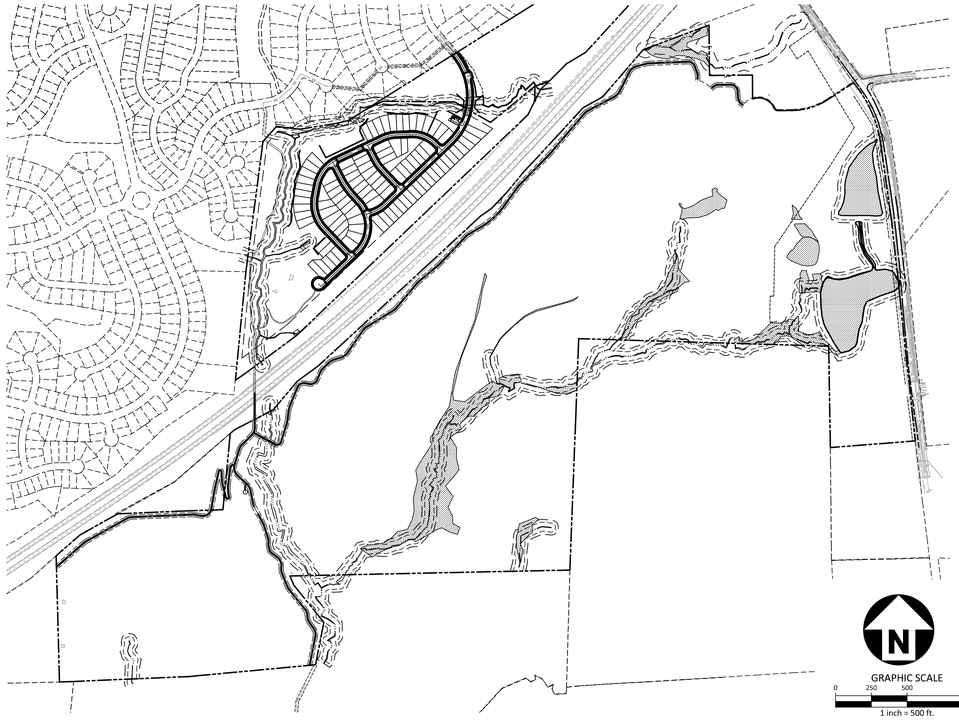

SHEET INDEX

C0.00	PROJECT NOTES AND TYPICAL SECTIONS
C1.00	EXISTING CONDITIONS
C2.00	OVERALL SITE PLAN
C2.01	SITE PLAN - AREA "A"
C2.02	SITE PLAN - AREA "B"
C2.03	PAVEMENT MARKING AND SIGNAGE PLAN - AREA "A"
C2.04	PAVEMENT MARKING AND SIGNAGE PLAN - AREA "B"
C3.00	OVERALL GRADING AND STORM DRAINAGE PLAN
C3.01	GRADING AND STORM DRAINAGE PLAN - AREA "A"
C3.02	GRADING AND STORM DRAINAGE PLAN - AREA "B"
C4.00	OVERALL UTILITY PLAN
C4.01	UTILITY PLAN - AREA "A"
C4.02	UTILITY PLAN - AREA "B"
C5.00	PLAN AND PROFILE - GENOVESA DRIVE STA. 10+00.00 THRU STA. 19+50.00
C5.01	PLAN AND PROFILE - GENOVESA DRIVE STA. 19+50.00 THRU STA. 26+00.00
C5.02	PLAN AND PROFILE - COMMEND PLACE STA. 10+00.00 THRU STA. 19+00.00
C5.03	PLAN AND PROFILE - COMMEND PLACE STA. 19+00.00 THRU STA. 21+00.00
	PLAN AND PROFILE - LAUDABLE WAY
C5.04	PLAN AND PROFILE - RADIANT WAY STA. 10+00.00 THRU STA. 19+50.00
C5.05	PLAN AND PROFILE - RADIANT WAY STA. 19+50.00 THRU STA. 26+50.00
C5.06	PLAN AND PROFILE - GREENWAY "2" STA. 32+00.00 THRU STA. 41+50.00
C5.07	PLAN AND PROFILE - GREENWAY "2" STA. 41+50.00 THRU STA. 50+50.00
C5.08	PLAN AND PROFILE - GREENWAY "3"
C5.09	PLAN AND PROFILE - SS OUTFALL "A"
C6.00	EROSION CONTROL NOTES
C6.01A	EROSION CONTROL PLAN - STAGE 1 - AREA "A"
C6.02A	EROSION CONTROL PLAN - STAGE 1 - AREA "B"
C6.01B	EROSION CONTROL PLAN - STAGE 2 - AREA "A"
C6.02B	EROSION CONTROL PLAN - STAGE 2 - AREA "B"
C6.00	EROSION CONTROL DETAILS
C6.00	EROSION CONTROL DETAILS
C6.00	EROSION CONTROL DETAILS
C6.00	EROSION CONTROL DETAILS
C8.00	SITE DETAILS
C8.01	SITE DETAILS
C8.02	STORM DRAINAGE DETAILS
C8.03	STORM DRAINAGE DETAILS
C8.04	WATER DETAILS
C8.05	WATER DETAILS
C8.06	SANITARY SEWER DETAILS
C8.07	SANITARY SEWER DETAILS
C9.00	STORMWATER CONTROL MEASURE "M" PLAN VIEW
C9.01	STORMWATER CONTROL MEASURE "M" DETAILS
C9.02	STORMWATER CONTROL MEASURE "M" DETAILS
C9.03	STORMWATER CONTROL MEASURE "M" LANDSCAPE PLAN
C9.04	STORMWATER CONTROL MEASURE "N" PLAN VIEW
C9.05	STORMWATER CONTROL MEASURE "N" DETAILS
C9.06	STORMWATER CONTROL MEASURE "N" DETAILS
C9.07	STORMWATER CONTROL MEASURE "N" LANDSCAPE PLAN
C9.08	STORMWATER CONTROL MEASURE "O" PLAN VIEW
C9.09	STORMWATER CONTROL MEASURE "O" DETAILS
C9.10	STORMWATER CONTROL MEASURE "O" DETAILS
C9.11	STORMWATER CONTROL MEASURE "O" LANDSCAPE PLAN

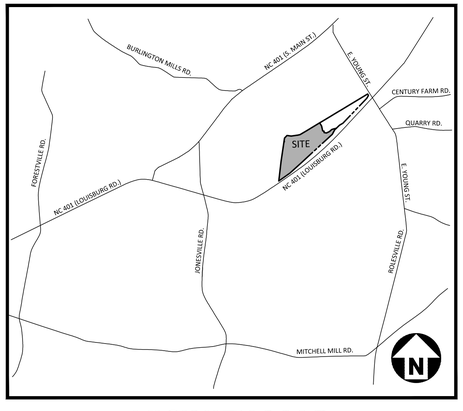

VICINITY MAP
N.T.S.

EROSION CONTROL, STORMWATER AND FLOODPLAIN MANAGEMENT

APPROVED

EROSION CONTROL ☐ S-_____

STORMWATER MGMT. ☐ S-_____

FLOOD STUDY ☐ S-_____

DATE_____

WAKE COUNTY NORTH CAROLINA EFFECTIVE: 08/23/17

ENVIRONMENTAL CONSULTANT SIGNATURE

Rolesville

APPROVED FOR COMPLIANCE

Case # _____ Project: _____

By: _____ Date: _____

These plans have been approved for compliance with the Town Code of Ordinance, UDO, and Standard Specifications & Construction Details, subject to statements & conditions hereby incorporated by reference.

QUANTITIES :

STREETS

GENOVESA DRIVE	50' R/W	1,462 LF
COMMEND PLACE	50' R/W	1,058 LF
LAUDABLE WAY	50' R/W	390 LF
RADIANT WAY	60' R/W	1,642 LF

PUBLIC UTILITY IMPROVEMENTS QUANTITIES
(CONSTRUCTION DRAWINGS - PHASES 11-13)

PHASE NUMBER	ALL PHASES
NUMBER OF LOTS	94
LOT NUMBERS	805-898
6" PUBLIC WATER (LF) (FIRE HYDRANT)	265 LF
8" PUBLIC WATER (LF)	4,655 LF
12" PUBLIC WATER (LF)	0 LF
8" PUBLIC SEWER (LF)	4,549 LF
WATER SERVICE STUBS	94
SEWER SERVICE STUBS	94

SITE PERMITTING APPROVAL

Water and Sewer Permits (If applicable)

The City of Raleigh consents to the connection and extension of the City's Public Sewer System as shown on this plan. The material and Construction methods used for this project shall conform to the standards and specifications of the City's Public Utilities Handbook. City of Raleigh Public Utilities Department Permit # _____

The City of Raleigh consents to the connection and extension of the City's Public Water System as shown on this plan. The material and Construction methods used for this project shall conform to the standards and specifications of the City's Public Utilities Handbook. City of Raleigh Public Utilities Department Permit # _____

The City of Raleigh consents to the connection to its public sewer system and extension of the private sewer collection system as shown on this plan. The material and constructions methods used for this project shall conform to the standards and specifications of the City's Public Utilities Handbook.
City of Raleigh Public Utilities Department Permit # _____

FINAL DRAWING - NOT RELEASED FOR CONSTRUCTION

McADAMS
The John R. McAdams Company, Inc.
2905 Meridian Parkway
Durham, NC 27713

phone 919. 361. 5000
fax 919. 361. 2269
license number: C-0293, C-187

www.mcadamsco.com

CONTACT

MIKE SANCHEZ
sanchez@mcadamsco.com
PHONE: 919. 361. 5000

CLIENT

ASHTON RALEIGH RESIDENTIAL, LLC.
5711 SIX FORKS ROAD, SUITE 300
RALEIGH, NORTH CAROLINA 27609
PHONE: 919. 232. 3695
CONTACT: BOB MISHLER

ASHTON WOODS

PROJECT DIRECTORY

#1 - Update on all sheets
CD 22-05

CD-XXXX

NORTH CAROLINA PROFESSIONAL SEAL 22630 ENGINEER WILLIAM T. O'DANIEL
NOT FOR CONSTRUCTION

REVISIONS

NO. DATE

CONSTRUCTION DRAWINGS FOR:

THE POINT
PHASES 11-13
EAST YOUNG STREET
ROLESVILLE, NORTH CAROLINA
PROJECT NUMBER: AWH-20000

M:\Projects\AWH\AWH-20000\04-Production\Engineering\The Point North\Current Drawings\AWH20000-North-C01.dwg, 10/28/2022 8:59:25 AM, Williams, 1:1

M:\Projects\AWH\AWH-20000\04-Production\Engineering\The Point North\Current Drawings\AWH20000-North-C51.dwg, 10/28/2022 8:59:28 AM, Sherril Williams

OPEN SPACE REQUIREMENTS

OPEN SPACE	AREA (AC) APPROXIMATE ACTIVE	PASSIVE	TOTAL	USE DESCRIPTION
OS-1	2.52	13.82	711,478 SF (16.33 AC)	OUTDOOR GRILLING, PLAYGROUND, DOG PARK, MAIL KIOSK, 6' WIDE PRIVATE GREENWAY, 10' WIDE PUBLIC GREENWAY
OS-2	0.0	0.2	8,906 SF (0.2 AC)	
OS-3	0.0	0.45	19,616 SF (0.45 AC)	
TOTAL	2.52	14.47	739,999 SF (16.99 AC)	NORTH OF 401 BYPASS

SETBACKS (NORTH OF 401 BYPASS)

R2 PUD	
FRONT	20 FT
SIDE	5 FT
AGGREGATE SIDE	10 FT
CORNER SIDE	10 FT
REAR	15 FT
MIN LOT WIDTH	45 FT
MIN LOT AREA	4,800 FT

PARKING (NORTH OF 401 BYPASS)

SINGLE FAMILY	
REQUIRED: (2 SPACES/UNIT)	2 x 94 UNITS = 188 SPACES
PROVIDED:	94 GARAGE SPACES 94 DRIVEWAY SPACES TOTAL PROVIDED: 188 SPACES

SITE AND OPEN SPACE AREAS

TOTAL SITE AREA	41.65 AC
RESIDENTIAL	41.65 AC
R2	94 SINGLE FAMILY DETACHED
TOTAL UNITS	94
OVERALL DENSITY	2.26 DU/AC
OPEN SPACE	
REQUIRED: SINGLE FAMILY 10% SFD AREA (41.65 AC)	4.165 AC REQUIRED
PROVIDED:	2.52 AC ACTIVE OPEN SPACE 14.47 AC PASSIVE OPEN SPACE 16.99 TOTAL OPEN SPACE PROVIDED

MAIL KIOSK CALCULATIONS

NUMBER OF MAIL BOXES(UNITS)	REQUIRED PARKING SPACES
52 OR LESS	2
53-78	3
79-104	4
105 OR MORE	4 PLUS 1 PER EACH ADDITIONAL 26 MAILBOXES

MAIL KIOSK AREA 5
MAIL KIOSK CALCULATION:
PHASES 11, 12, AND 13 (94 UNITS)
94 UNITS @ 16 UNITS/KIOSK (CBU) = 6 KIOSKS (CBUs)

MAIL KIOSK PARKING: 94 UNITS
REQUIRED: 4 SPACES
PROVIDED: 4 SPACES (1 VAN ACCESSIBLE)

#2 - While we recognize the PR was approved with this typical section, to comply with changing Town preferences, is it possible to place the sidewalk 1' off the right-of-way? This would also provide a wider boulevard for plantings and street trees if being provided.

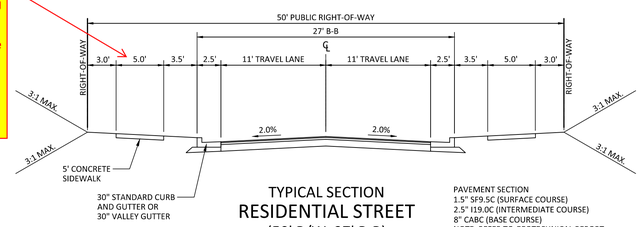

TYPICAL SECTION
RESIDENTIAL STREET
(50' R/W, 27' B-B)

PAVEMENT SECTION
1.5" SF9.5C (SURFACE COURSE)
2.5" I19.0C (INTERMEDIATE COURSE)
8" CABC (BASE COURSE)
NOTE: REFER TO GEOTECHNICAL REPORT FOR FINAL PAVEMENT DESIGN

SINGLE FAMILY 45' MIN WIDTH (R2)

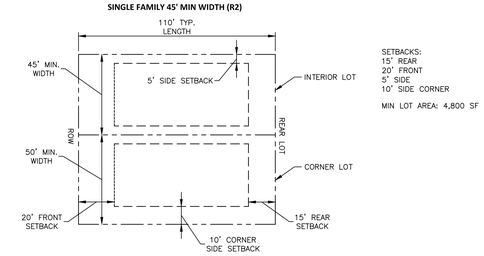

SETBACKS:
15' REAR
20' FRONT
5' SIDE
10' SIDE CORNER

MIN LOT AREA: 4,800 SF

TYPICAL LOT DIMENSIONS
SCALE 1" = 40'

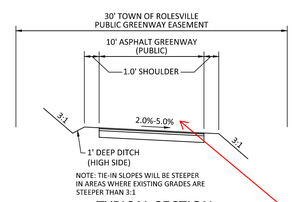

NOTE: TIE-IN SLOPES WILL BE STEEPER IN AREAS WHERE EXISTING GRADES ARE STEEPER THAN 3:1

TYPICAL SECTION
10' PUBLIC ASPHALT GREENWAY

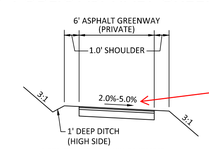

NOTE: TIE-IN SLOPES WILL BE STEEPER IN AREAS WHERE EXISTING GRADES ARE STEEPER THAN 3:1

TYPICAL SECTION
6' PRIVATE ASPHALT GREENWAY

#3 - Per the Rolesville greenway plan, the goal is that greenways should still be accessible; a max cross slope grade of 2% is required

If there is a reason this greenway does not intend to be accessible, please provide clarification.

McADAMS
The John R. McAdams Company, Inc.
2905 Meridian Parkway
Durham, NC 27713

phone 919. 361. 5000
fax 919. 361. 2269
license number: C-0293, C-187

www.mcadamsco.com

CLIENT

ASHTON WOODS
5711 SIX FORKS ROAD, SUITE 300
RALEIGH, NORTH CAROLINA 27609

ASHTON WOODS

THE POINT
PHASES 11-13
CONSTRUCTION DRAWINGS
EAST YOUNG STREET
TOWN OF ROLESVILLE, WAKE FOREST TOWNSHIP,
WAKE COUNTY, NORTH CAROLINA

CD XX-XX

NORTH CAROLINA PROFESSIONAL SEAL 22630 ENGINEER WILLIAM T. O'DANIEL
NOT FOR CONSTRUCTION

REVISIONS

NO. DATE

PLAN INFORMATION

PROJECT NO.	AWH-20000
FILENAME	AWH20000-NORTH-N1
CHECKED BY	.
DRAWN BY	.
SCALE	N.T.S.
DATE	10. 27. 2022

SHEET

PROJECT NOTES AND TYPICAL SECTIONS

C0.00

FINAL DRAWING - NOT RELEASED FOR CONSTRUCTION

M:\Projects\AWH\AWH-20000\04-Production\Engineering\The Point North\Current Drawings\AWH20000-North-N1.dwg, 10/27/2022 8:57:05 AM, Williams, 1:1

M:\Projects\AWH\AWH-20000\04-Production\Engineering\The Point North\Current Drawings\AWH20000-North-N1.dwg, 10/27/2022 8:57:05 AM, Sherrill Williams

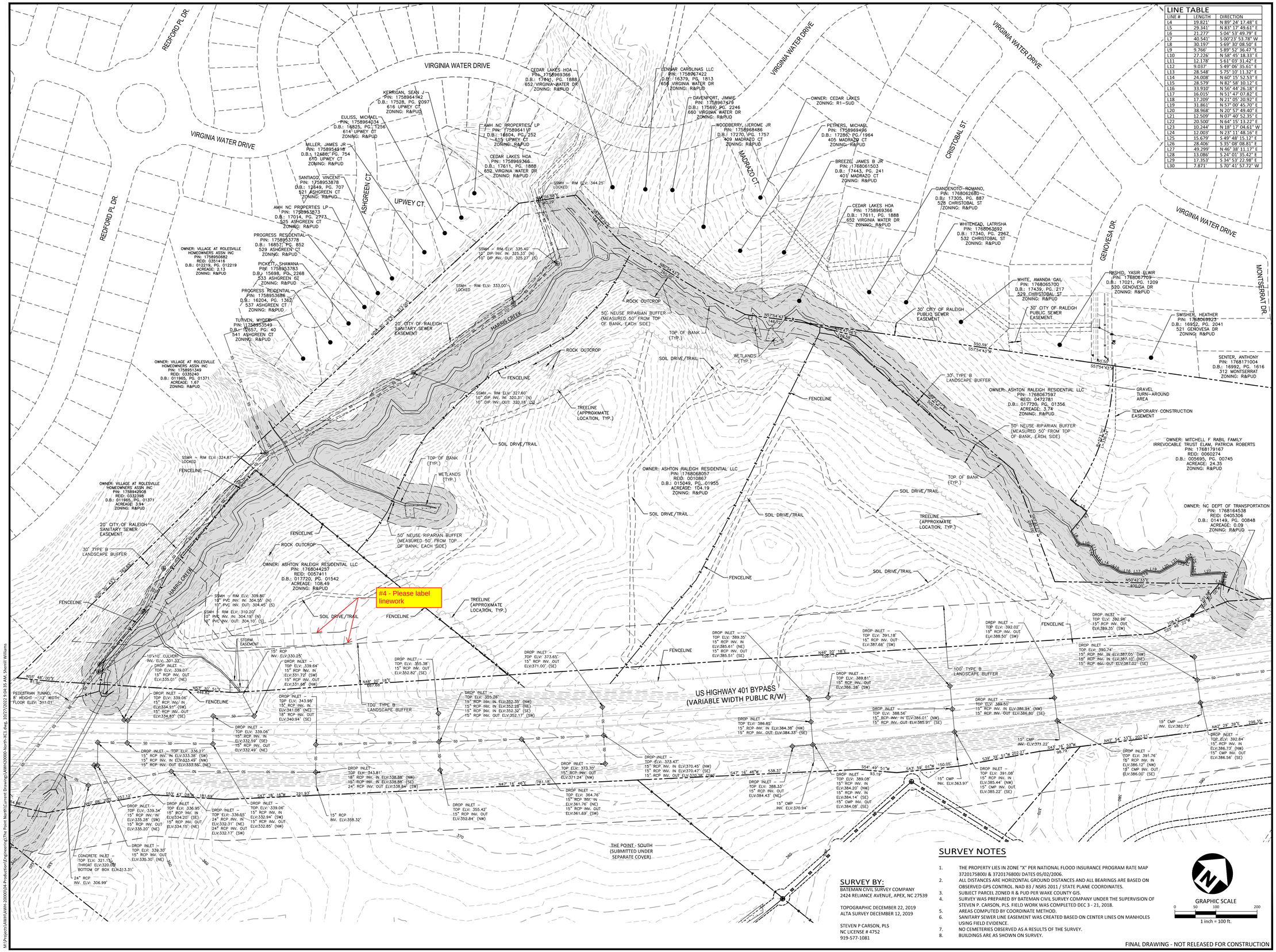

LINE TABLE		
LINE #	LENGTH	DIRECTION
L4	19.821'	N 89° 24' 17.48" E
L5	29.341'	N 83° 17' 49.61" E
L6	21.277'	S 04° 53' 49.79" E
L7	40.541'	S 00°23' 53.78" W
L8	30.197'	S 69° 30' 08.50" E
L9	9.766'	S 89° 52' 36.47" E
L10	27.226'	N 58° 45' 18.33" E
L11	12.178'	S 61° 03' 31.42" E
L12	9.037'	S 49° 06' 35.61" E
L13	28.548'	S 75° 10' 11.32" E
L14	24.008'	N 60° 15' 52.53" E
L15	28.579'	N 82° 58' 10.12" E
L16	33.910'	N 56° 44' 26.18" E
L17	16.015'	N 51° 47' 07.82" E
L18	17.209'	N 21° 05' 20.92" E
L19	31.861'	N 57° 00' 45.70" E
L20	38.968'	N 20° 57' 49.40" E
L21	12.509'	N 07° 40' 52.35" E
L22	20.500'	N 64° 15' 13.22" E
L23	10.244'	N 18° 17' 04.61" W
L24	12.003'	N 23° 11' 48.16" E
L25	15.679'	S 49° 48' 15.12" E
L26	28.406'	S 35° 08' 08.81" E
L27	49.299'	N 46° 38' 11.17" E
L28	13.086'	S 24° 01' 35.42" E
L29	17.353'	S 34° 53' 22.98" E
L30	7.871'	S 70° 41' 57.72" W

SURVEY NOTES

1. THE PROPERTY LIES IN ZONE "X" PER NATIONAL FLOOD INSURANCE PROGRAM RATE MAP 3720175800J & 3720176800J DATES 05/02/2006.
2. ALL DISTANCES ARE HORIZONTAL GROUND DISTANCES AND ALL BEARINGS ARE BASED ON OBSERVED GPS CONTROL. NAD 83 / NSRS 2011 / STATE PLANE COORDINATES.
3. SUBJECT PARCEL ZONED R & PUD PER WAKE COUNTY GIS.
4. SURVEY WAS PREPARED BY BATEMAN CIVIL SURVEY COMPANY UNDER THE SUPERVISION OF STEVEN P. CARSON, PLS. FIELD WORK WAS COMPLETED DEC 3 - 21, 2018.
5. AREAS COMPUTED BY COORDINATE METHOD.
6. SANITARY SEWER LINE EASEMENT WAS CREATED BASED ON CENTER LINES ON MANHOLES USING FIELD EVIDENCE.
7. NO CEMETERIES OBSERVED AS A RESULTS OF THE SURVEY.
8. BUILDINGS ARE AS SHOWN ON SURVEY.

SURVEY BY:

BATEMAN CIVIL SURVEY COMPANY
2424 RELIANCE AVENUE, APEX, NC 27539

TOPOGRAPHIC DECEMBER 22, 2019
ALTA SURVEY DECEMBER 12, 2019

STEVEN P CARSON, PLS
NC LICENSE # 4752
919-577-1081

GRAPHIC SCALE
0 50 100 200
1 inch = 100 ft.

FINAL DRAWING - NOT RELEASED FOR CONSTRUCTION

MCADAMS
The John R. McAdams Company, Inc.
2905 Meridian Parkway
Durham, NC 27713

phone 919. 361. 5000
fax 919. 361. 2269
license number: C-0293, C-187

www.mcadamsco.com

CLIENT

ASHTON WOODS
5711 SIX FORKS ROAD, SUITE 300
RALEIGH, NORTH CAROLINA 27609

ASHTON WOODS

THE POINT
PHASES 11-13
CONSTRUCTION DRAWINGS
EAST YOUNG STREET
TOWN OF ROLESVILLE, WAKE FOREST TOWNSHIP,
WAKE COUNTY, NORTH CAROLINA

CD XX-XX

REVISIONS

NO. DATE

PLAN INFORMATION

PROJECT NO.	AWH-20000
FILENAME	AWH20000-NORTH-XC1
CHECKED BY	.
DRAWN BY	.
SCALE	1"=100'
DATE	10. 27. 2022

SHEET

EXISTING CONDITIONS

C1.00

M:\Projects\AWH\AWH-20000\04-Production\Engineering\The Point North\Current Drawings\AWH20000-North-XC1.dwg, 10/27/2022 9:04:33 AM, Williams, 1:1

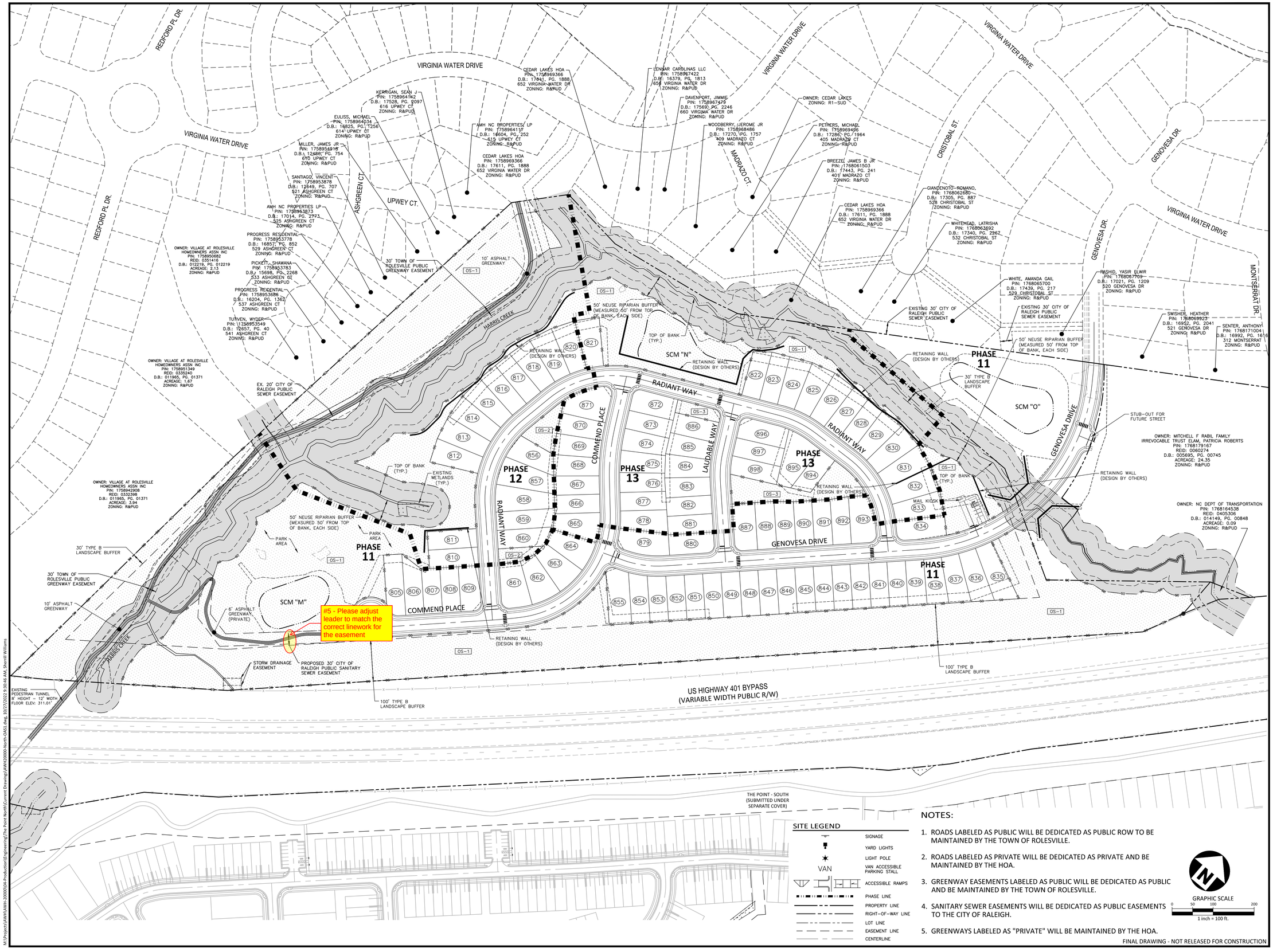

SITE LEGEND

- SIGNAGE
- YARD LIGHTS
- LIGHT POLE
- VAN — VAN ACCESSIBLE PARKING STALL
- ACCESSIBLE RAMPS
- PHASE LINE
- PROPERTY LINE
- RIGHT-OF-WAY LINE
- LOT LINE
- EASEMENT LINE
- CENTERLINE

NOTES:

1. ROADS LABELED AS PUBLIC WILL BE DEDICATED AS PUBLIC ROW TO BE MAINTAINED BY THE TOWN OF ROLESVILLE.
2. ROADS LABELED AS PRIVATE WILL BE DEDICATED AS PRIVATE AND BE MAINTAINED BY THE HOA.
3. GREENWAY EASEMENTS LABELED AS PUBLIC WILL BE DEDICATED AS PUBLIC AND BE MAINTAINED BY THE TOWN OF ROLESVILLE.
4. SANITARY SEWER EASEMENTS WILL BE DEDICATED AS PUBLIC EASEMENTS TO THE CITY OF RALEIGH.
5. GREENWAYS LABELED AS "PRIVATE" WILL BE MAINTAINED BY THE HOA.

GRAPHIC SCALE
0 50 100 200
1 inch = 100 ft.

FINAL DRAWING - NOT RELEASED FOR CONSTRUCTION

MCADAMS
The John R. McAdams Company, Inc.
2905 Meridian Parkway
Durham, NC 27713

phone 919. 361. 5000
fax 919. 361. 2269
license number: C-0293, C-187

www.mcadamsco.com

CLIENT

ASHTON WOODS
5711 SIX FORKS ROAD, SUITE 300
RALEIGH, NORTH CAROLINA 27609

ASHTON WOODS

THE POINT
PHASES 11-13
CONSTRUCTION DRAWINGS
EAST YOUNG STREET
TOWN OF ROLESVILLE, WAKE FOREST TOWNSHIP,
WAKE COUNTY, NORTH CAROLINA

CD XX-XX

NORTH CAROLINA PROFESSIONAL SEAL 22630 ENGINEER WILLIAM T. O'DANIEL
NOT FOR CONSTRUCTION

REVISIONS

NO. DATE

PLAN INFORMATION

PROJECT NO.	AWH-20000
FILENAME	AWH20000-NORTH-OAS1
CHECKED BY	.
DRAWN BY	.
SCALE	1"=100'
DATE	10. 27. 2022

SHEET

OVERALL SITE PLAN

C2.00

M:\Projects\AWH\AWH-20000\04-Production\Engineering\The Point North\Current Drawings\AWH20000-North-OAS1.dwg, 10/27/2022 9:30:46 AM, Sherrill Williams, 1:1

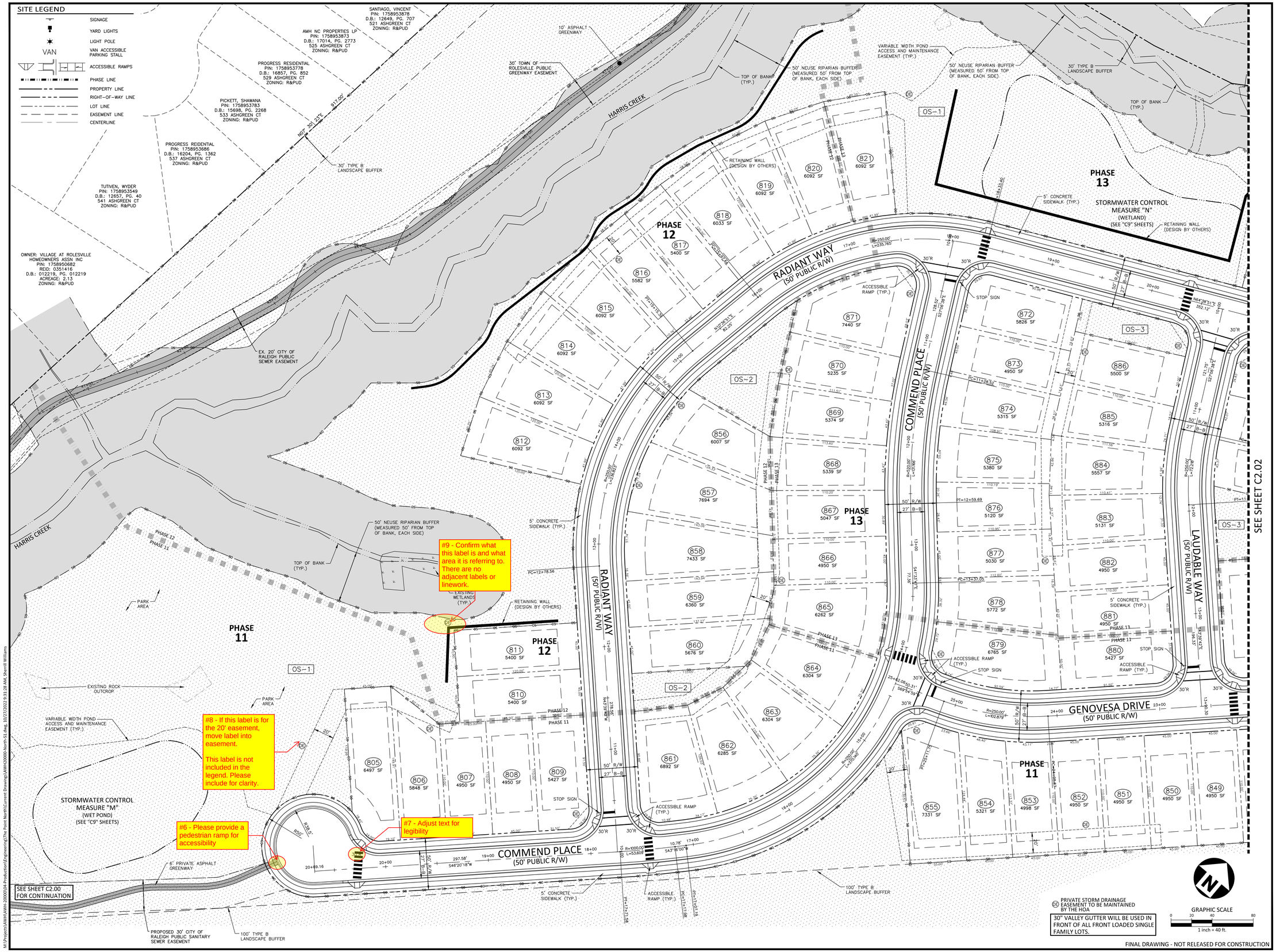

FINAL DRAWING - NOT RELEASED FOR CONSTRUCTION

McADAMS
The John R. McAdams Company, Inc.
2905 Meridian Parkway
Durham, NC 27713

phone 919. 361. 5000
fax 919. 361. 2269
license number: C-0293, C-187

www.mcadamsco.com

CLIENT

ASHTON WOODS
5711 SIX FORKS ROAD, SUITE 300
RALEIGH, NORTH CAROLINA 27609

ASHTON WOODS

THE POINT
PHASES 11-13
CONSTRUCTION DRAWINGS
EAST YOUNG STREET
TOWN OF ROLESVILLE, WAKE FOREST TOWNSHIP, WAKE COUNTY, NORTH CAROLINA

CD XX-XX

NORTH CAROLINA PROFESSIONAL SEAL 22630 ENGINEER WILLIAM T. O'DANIEL
NOT FOR CONSTRUCTION

REVISIONS

NO. DATE

PLAN INFORMATION

PROJECT NO.	AWH-20000
FILENAME	AWH20000-NORTH-S1
CHECKED BY	.
DRAWN BY	.
SCALE	1"=40'
DATE	10. 27. 2022

SHEET

SITE PLAN AREA "A"

C2.01

M:\Projects\AWH\AWH-20000\04-Production\Engineering\The Point North\Current Drawings\AWH20000-North-S1.dwg, 10/27/2022 9:31:28 AM, Williams, 1:1

M:\Projects\AWH\AWH-20000\04-Production\Engineering\The Point North\Current Drawings\AWH20000-North-S1.dwg, 10/27/2022 9:31:28 AM, Sherrill Williams

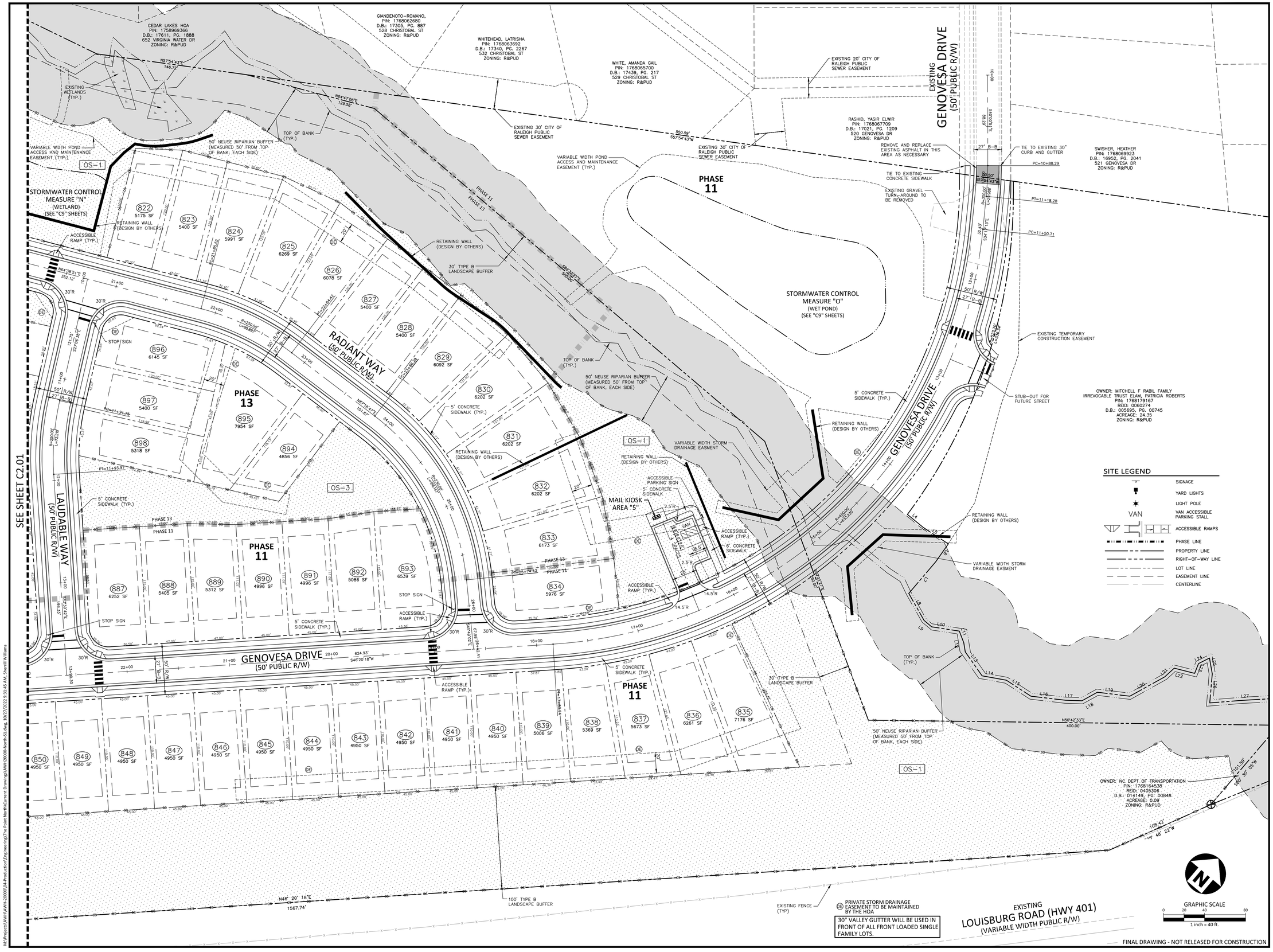

McADAMS
The John R. McAdams Company, Inc.
2905 Meridian Parkway
Durham, NC 27713

phone 919. 361. 5000
fax 919. 361. 2269
license number: C-0293, C-187

www.mcadamsco.com

CLIENT

ASHTON WOODS
5711 SIX FORKS ROAD, SUITE 300
RALEIGH, NORTH CAROLINA 27609

ASHTON WOODS

THE POINT
PHASES 11-13
CONSTRUCTION DRAWINGS
EAST YOUNG STREET
TOWN OF ROLESVILLE, WAKE FOREST TOWNSHIP, WAKE COUNTY, NORTH CAROLINA

CD XX-XX

NORTH CAROLINA PROFESSIONAL SEAL 22630 ENGINEER WILLIAM T. O'DANIEL
NOT FOR CONSTRUCTION

REVISIONS

NO.	DATE

PLAN INFORMATION

PROJECT NO.	AWH-20000
FILENAME	AWH20000-NORTH-S1
CHECKED BY	.
DRAWN BY	.
SCALE	1"=40'
DATE	10. 27. 2022

SHEET

SITE PLAN AREA "B"

C2.02

M:\Projects\AWH\AWH-20000\04-Production\Engineering\The Point North\Current Drawings\AWH20000-North-S1.dwg, 10/27/2022 9:31:49 AM, Williams, 1:1

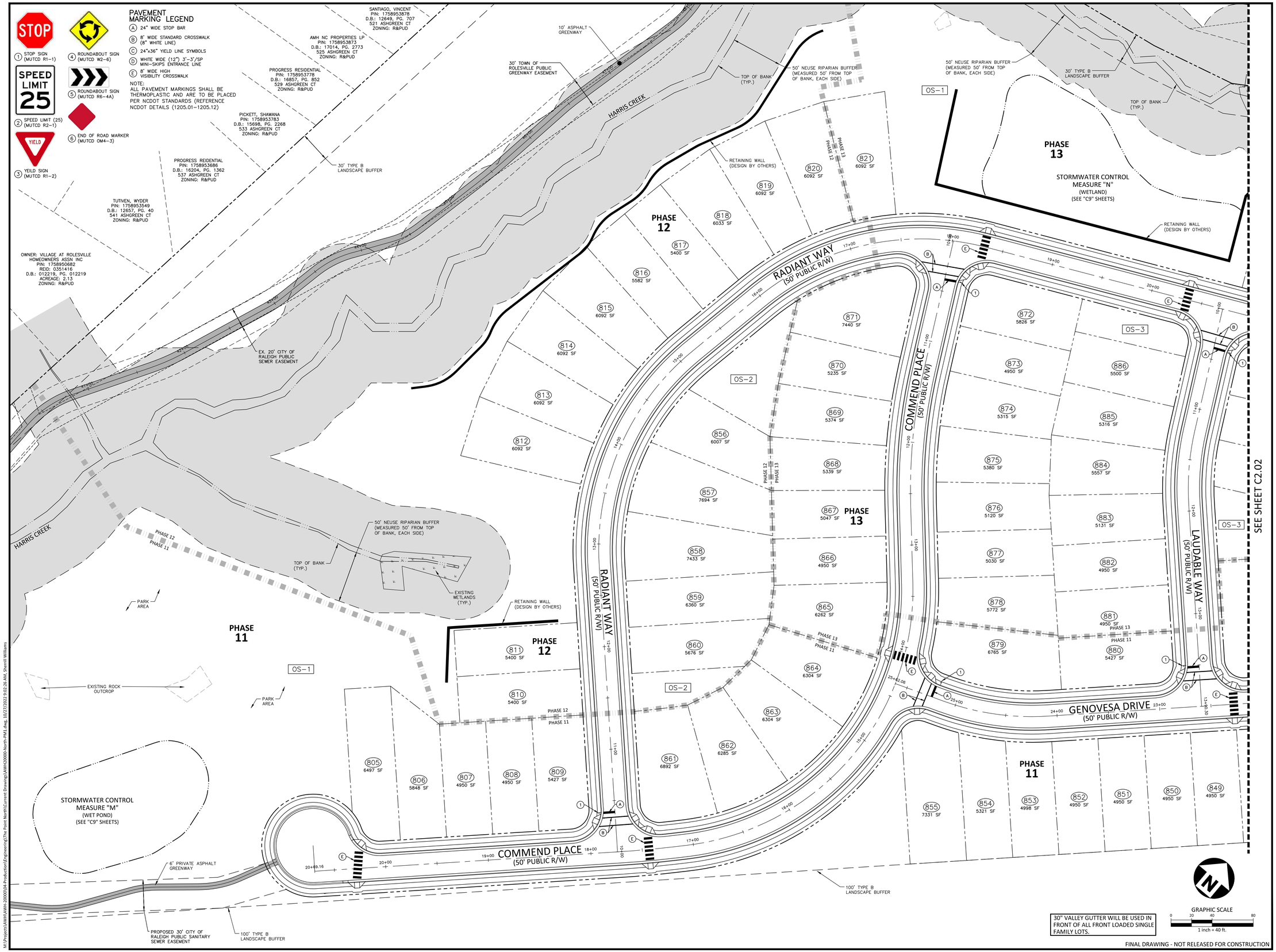

McADAMS
The John R. McAdams Company, Inc.
2905 Meridian Parkway
Durham, NC 27713

phone 919. 361. 5000
fax 919. 361. 2269
license number: C-0293, C-187

www.mcadamsco.com

CLIENT

ASHTON WOODS
5711 SIX FORKS ROAD, SUITE 300
RALEIGH, NORTH CAROLINA 27609

ASHTON WOODS

THE POINT
PHASES 11-13
CONSTRUCTION DRAWINGS
EAST YOUNG STREET
TOWN OF ROLESVILLE, WAKE FOREST TOWNSHIP, WAKE COUNTY, NORTH CAROLINA

CD XX-XX

NORTH CAROLINA PROFESSIONAL SEAL 22630 ENGINEER WILLIAM T. O'DANIEL
NOT FOR CONSTRUCTION

REVISIONS

NO. DATE

PLAN INFORMATION

PROJECT NO.	AWH-20000
FILENAME	AWH20000-NORTH-PM1
CHECKED BY	.
DRAWN BY	.
SCALE	1"=40'
DATE	10. 27. 2022

SHEET

PAVEMENT MARKING AND SIGNAGE PLAN AREA "A"

C2.03

M:\Projects\AWH\AWH-20000\04-Production\Engineering\The Point North\Current Drawings\AWH20000-North-PM1.dwg, 10/27/2022 9:02:21 AM, Williams, 1:1

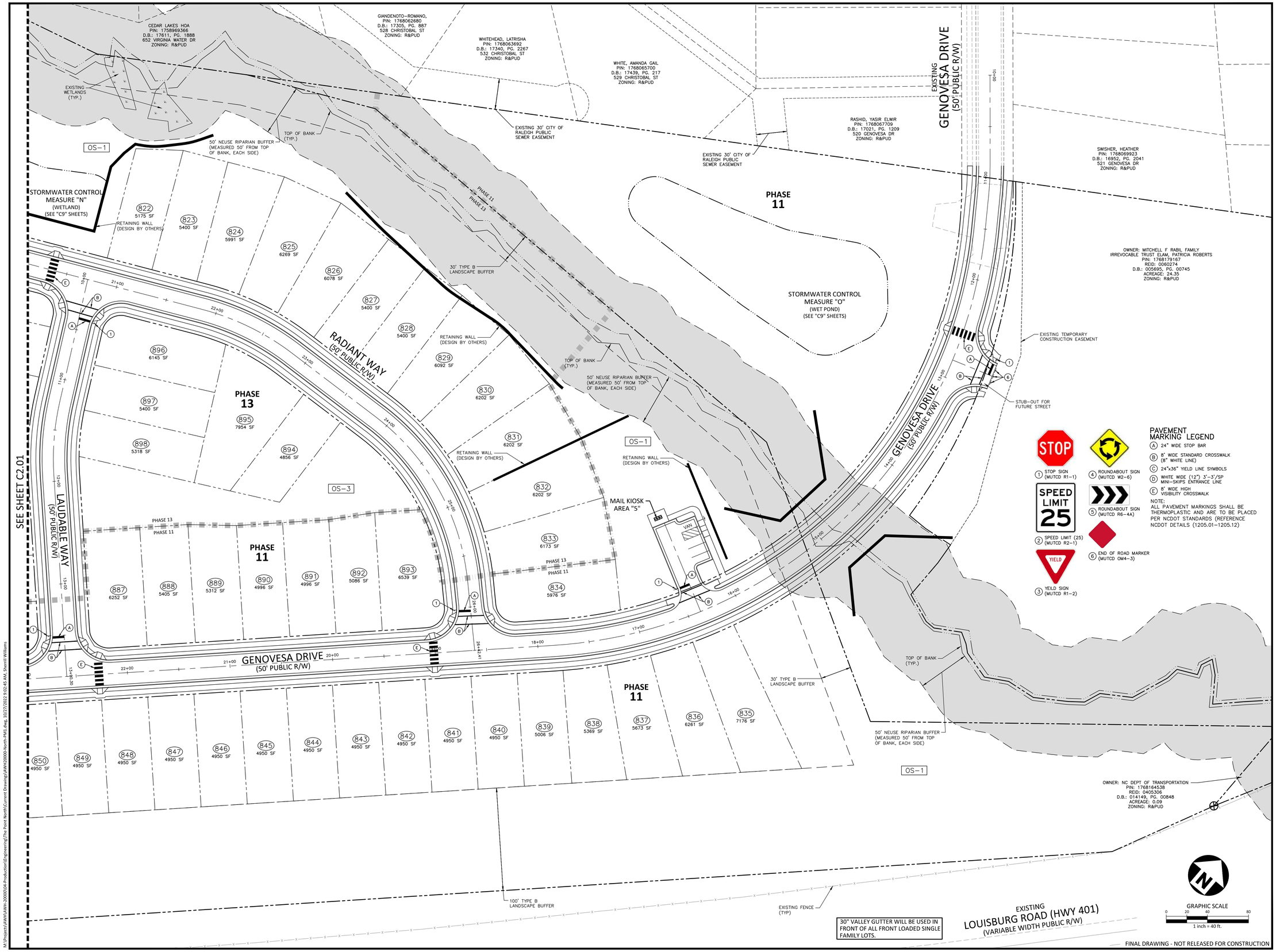

STOP

1 STOP SIGN (MUTCD R1-1)

SPEED LIMIT 25

2 SPEED LIMIT (25) (MUTCD R2-1)

YIELD

3 YEILD SIGN (MUTCD R1-2)

4 ROUNDABOUT SIGN (MUTCD W2-6)

5 ROUNDABOUT SIGN (MUTCD R6-4A)

6 END OF ROAD MARKER (MUTCD OM4-3)

PAVEMENT MARKING LEGEND

- (A) 24" WIDE STOP BAR
- (B) 8" WIDE STANDARD CROSSWALK (8" WHITE LINE)
- (C) 24"x36" YIELD LINE SYMBOLS
- (D) WHITE WIDE (12") 3'-3'/SP MINI-SKIPS ENTRANCE LINE
- (E) 8" WIDE HIGH VISIBILITY CROSSWALK

NOTE:
ALL PAVEMENT MARKINGS SHALL BE THERMOPLASTIC AND ARE TO BE PLACED PER NCDOT STANDARDS (REFERENCE NCDOT DETAILS 1205.01-1205.12)

MCADAMS
The John R. McAdams Company, Inc.
2905 Meridian Parkway
Durham, NC 27713

phone 919. 361. 5000
fax 919. 361. 2269
license number: C-0293, C-187

www.mcadamsco.com

CLIENT

ASHTON WOODS
5711 SIX FORKS ROAD, SUITE 300
RALEIGH, NORTH CAROLINA 27609

ASHTON WOODS

THE POINT
PHASES 11-13
CONSTRUCTION DRAWINGS
EAST YOUNG STREET
TOWN OF ROLESVILLE, WAKE FOREST TOWNSHIP, WAKE COUNTY, NORTH CAROLINA

CD XX-XX

NORTH CAROLINA PROFESSIONAL SEAL 22630 ENGINEER WILLIAM T. O'DANIEL

NOT FOR CONSTRUCTION

REVISIONS

NO. DATE

PLAN INFORMATION

PROJECT NO.	AWH-20000
FILENAME	AWH20000-NORTH-PM1
CHECKED BY	.
DRAWN BY	.
SCALE	1"=40'
DATE	10. 27. 2022

SHEET

PAVEMENT MARKING AND SIGNAGE PLAN AREA "A"

C2.04

FINAL DRAWING - NOT RELEASED FOR CONSTRUCTION

M:\Projects\AWH\AWH-20000\04-Production\Engineering\The Point North\Current Drawings\AWH20000-North-PM1.dwg, 10/27/2022 9:02:40 AM, Williams, 1:1

M:\Projects\AWH\AWH-20000\04-Production\Engineering\The Point North\Current Drawings\AWH20000-North-PM1.dwg, 10/27/2022 9:02:45 AM, Sherrill Williams

McADAMS
The John R. McAdams Company, Inc.
2905 Meridian Parkway
Durham, NC 27713

phone 919. 361. 5000
fax 919. 361. 2269
license number: C-0293, C-187

www.mcadamsco.com

CLIENT

ASHTON WOODS
5711 SIX FORKS ROAD, SUITE 300
RALEIGH, NORTH CAROLINA 27609

ASHTON WOODS

THE POINT PHASES 11-13

CONSTRUCTION DRAWINGS
EAST YOUNG STREET
TOWN OF ROLESVILLE, WAKE FOREST TOWNSHIP,
WAKE COUNTY, NORTH CAROLINA

CD XX-XX

NORTH CAROLINA PROFESSIONAL SEAL 22630 ENGINEER WILLIAM T. O'DANIEL
NOT FOR CONSTRUCTION

REVISIONS

NO. DATE

PLAN INFORMATION

PROJECT NO.	AWH-20000
FILENAME	AWH20000-NORTH-OAG1
CHECKED BY	.
DRAWN BY	.
SCALE	1"=100'
DATE	10. 27. 2022

SHEET

OVERALL GRADING AND STORM DRAINAGE PLAN

C3.00

M:\Projects\AWH\AWH-20000\04-Production\Engineering\The Point North\Current Drawings\AWH20000-North-OAG1.dwg, 10/27/2022 8:59:53 AM, Williams, 1:1

M:\Projects\AWH\AWH-20000\04-Production\Engineering\The Point North\Current Drawings\AWH20000-North-OAG1.dwg, 10/27/2022 8:59:59 AM, Sherrill Williams

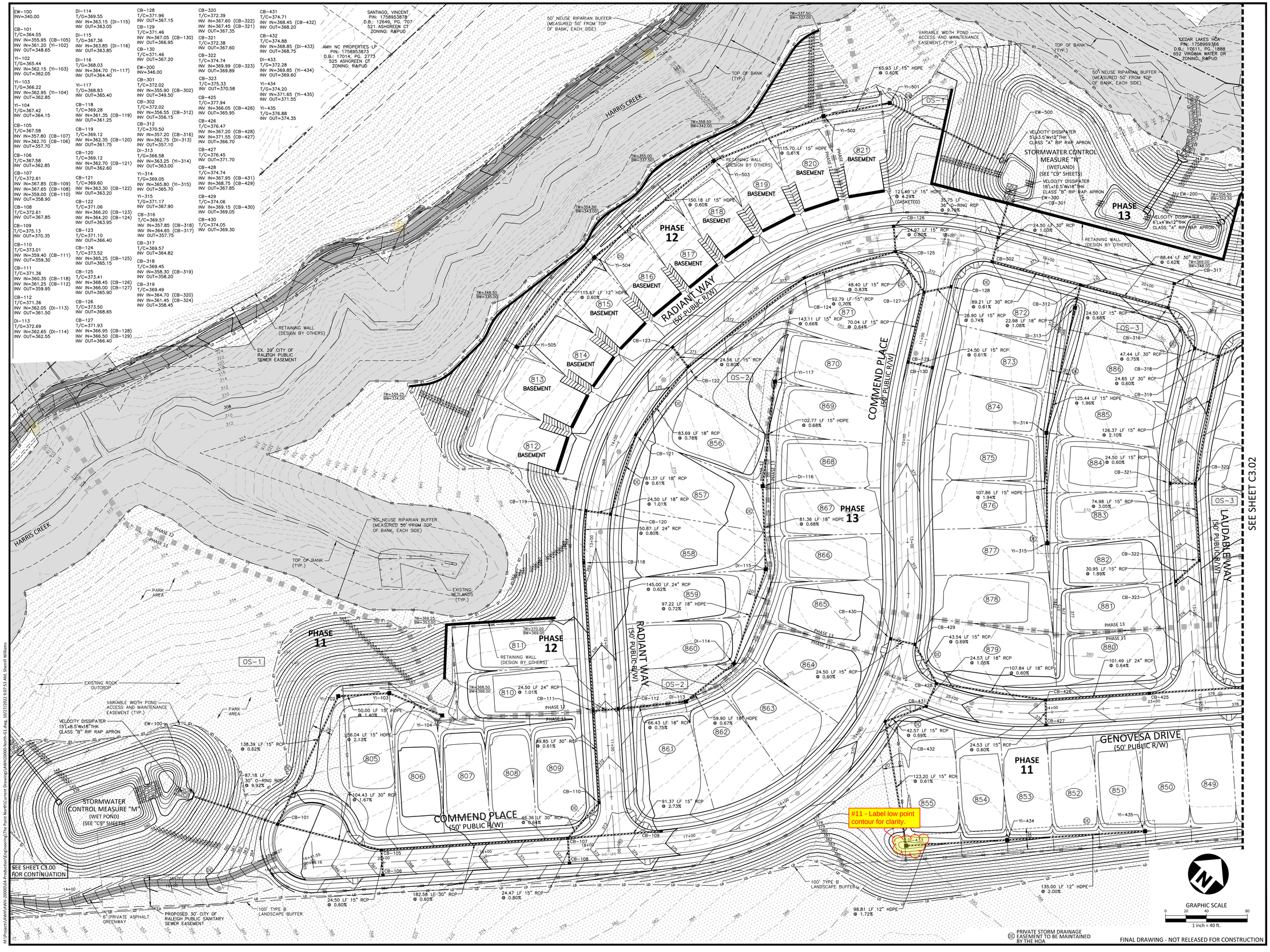

McADAMS
The John R. McAdams Company, Inc.
2905 Meridian Parkway
Durham, NC 27713

phone 919. 361. 5000
fax 919. 361. 2269
license number: C-0293, C-187

www.mcadamsco.com

CLIENT

ASHTON WOODS
5711 SIX FORKS ROAD, SUITE 300
RALEIGH, NORTH CAROLINA 27609

ASHTON WOODS

THE POINT
PHASES 11-13
CONSTRUCTION DRAWINGS
EAST YOUNG STREET
TOWN OF ROLESVILLE, WAKE FOREST TOWNSHIP, WAKE COUNTY, NORTH CAROLINA

CD XX-XX

NORTH CAROLINA PROFESSIONAL SEAL 22630 ENGINEER WILLIAM T. O'DANIEL
NOT FOR CONSTRUCTION

REVISIONS

NO. DATE

PLAN INFORMATION

PROJECT NO.	AWH-20000
FILENAME	AWH20000-NORTH-G1
CHECKED BY	.
DRAWN BY	.
SCALE	1"=40'
DATE	10. 27. 2022

SHEET

GRADING AND STORM DRAINAGE PLAN AREA "A"

C3.01

M:\Projects\AWH\AWH-20000\04-Production\Engineering\The Point North\Current Drawings\AWH20000-North-G1.dwg, 10/27/2022 9:07:53 AM, Sherrill Williams

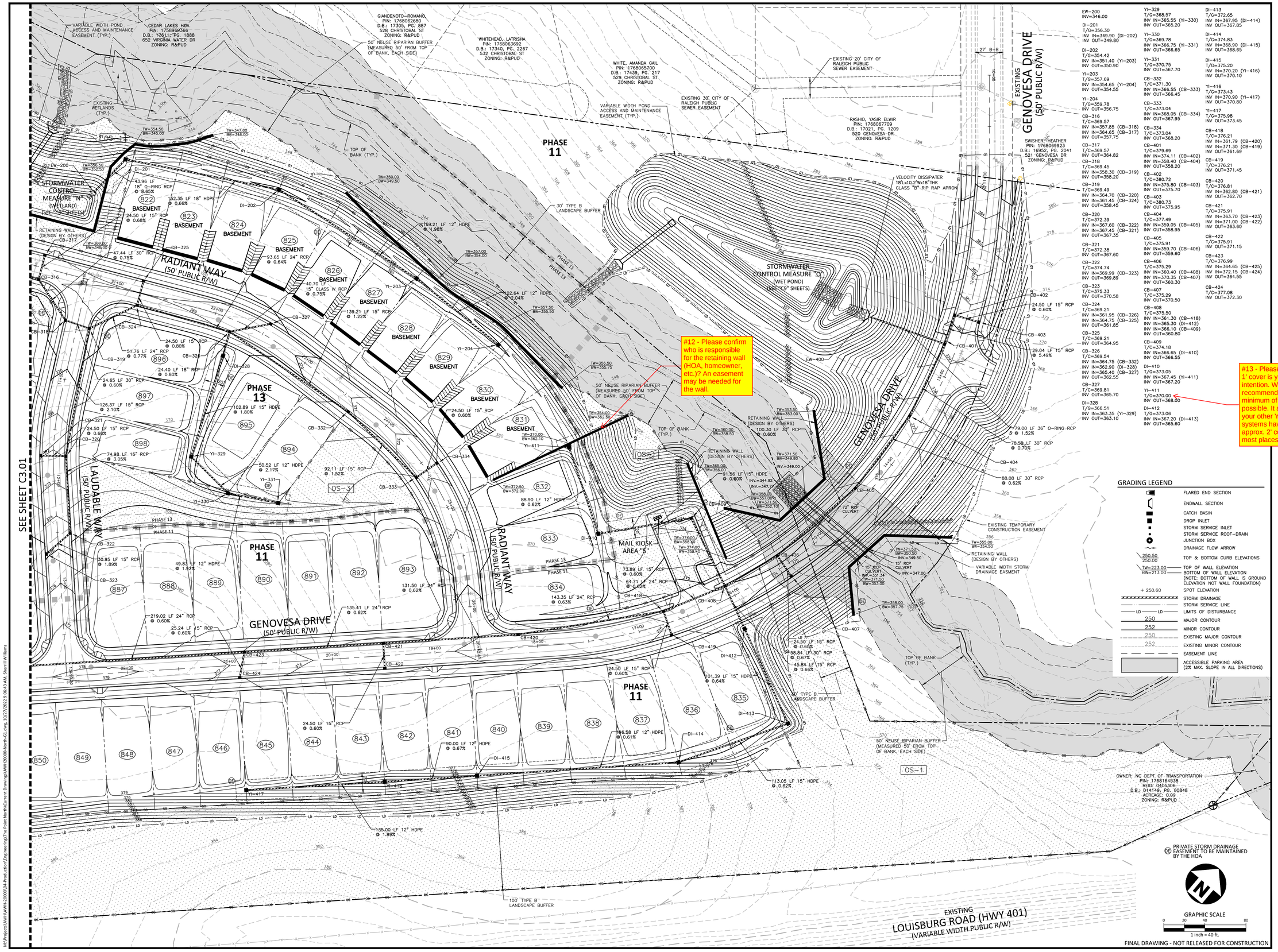

McADAMS
The John R. McAdams Company, Inc.
2905 Meridian Parkway
Durham, NC 27713
phone 919. 361. 5000
fax 919. 361. 2269
license number: C-0293, C-187
www.mcadamsco.com

CLIENT

ASHTON WOODS
5711 SIX FORKS ROAD, SUITE 300
RALEIGH, NORTH CAROLINA 27609

ASHTON WOODS

THE POINT PHASES 11-13

CONSTRUCTION DRAWINGS
EAST YOUNG STREET
TOWN OF ROLESVILLE, WAKE FOREST TOWNSHIP, WAKE COUNTY, NORTH CAROLINA

CD XX-XX

NORTH CAROLINA PROFESSIONAL SEAL 22630 ENGINEER WILLIAM T. O'DANIEL
NOT FOR CONSTRUCTION

REVISIONS

NO. DATE

PLAN INFORMATION

PROJECT NO.	AWH-20000
FILENAME	AWH20000-NORTH-U1
CHECKED BY	.
DRAWN BY	.
SCALE	1"=40'
DATE	10. 27. 2022

SHEET

GRADING AND STORM DRAINAGE PLAN AREA "B"

C3.02

M:\Projects\AWH\AWH-20000\04-Production\Engineering\The Point North\Current Drawings\AWH20000-North-G1.dwg, 10/27/2022 9:06:30 AM, Williams, 1:1

M:\Projects\AWH\AWH-20000\04-Production\Engineering\The Point North\Current Drawings\AWH20000-North-G1.dwg, 10/27/2022 9:06:43 AM, Sherrill Williams

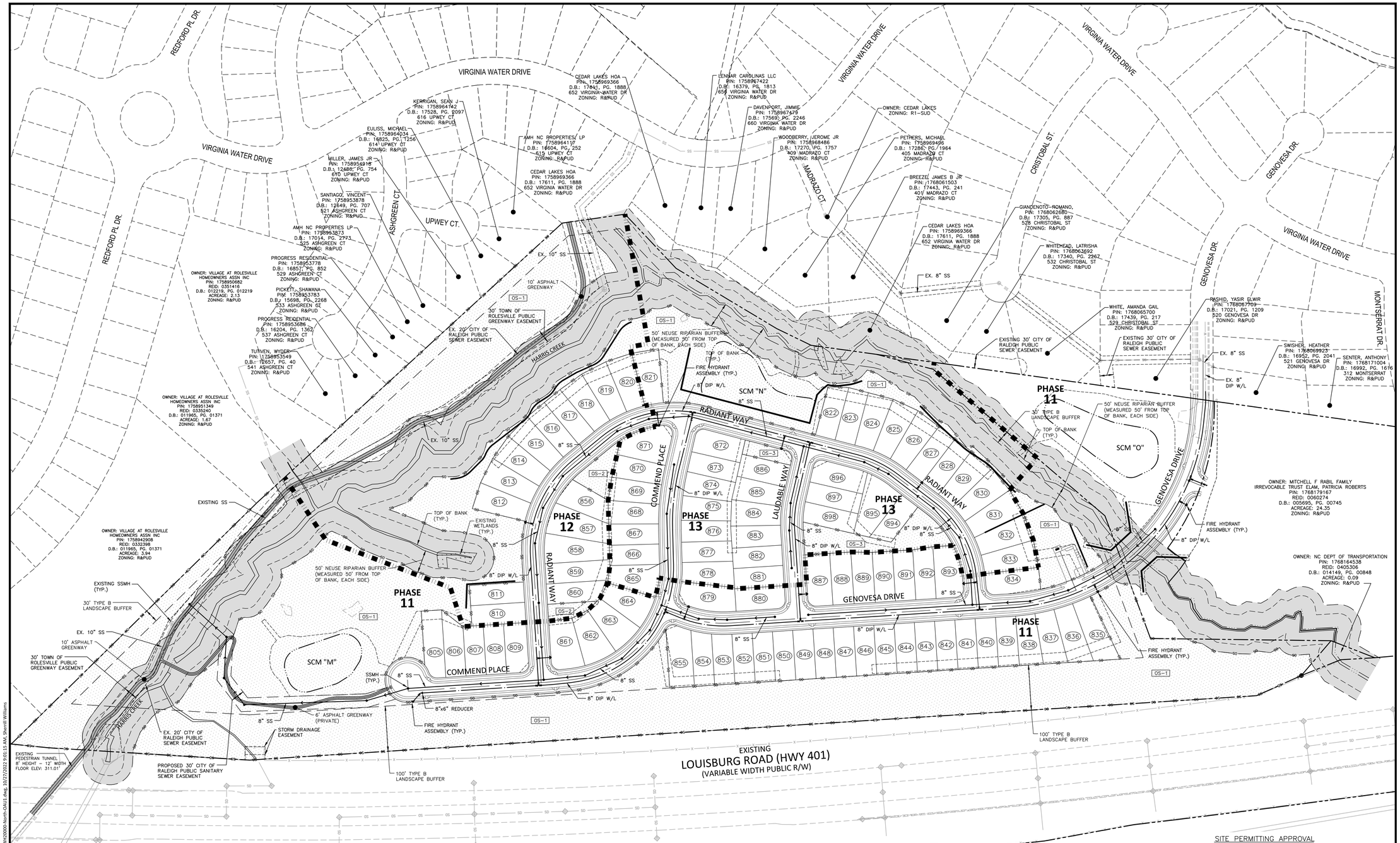

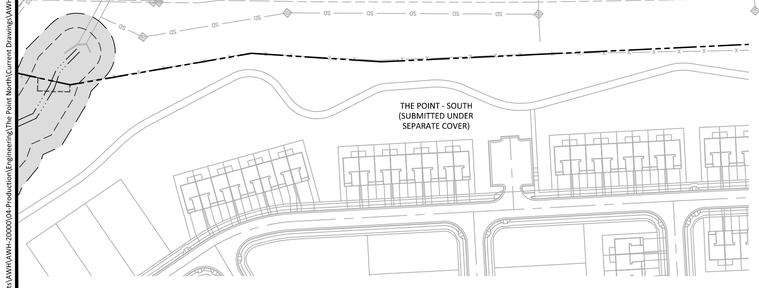

CITY OF RALEIGH PUBLIC UTILITIES STANDARD UTILITY NOTES (AS APPLICABLE)

1. ALL MATERIALS & CONSTRUCTION METHODS SHALL BE IN ACCORDANCE WITH CITY OF RALEIGH DESIGN STANDARDS, DETAILS & SPECIFICATIONS (REFERENCE: CORPUD HANDBOOK, CURRENT EDITION).

2. UTILITY SEPARATION REQUIREMENTS:

   a) A DISTANCE OF 100' SHALL BE MAINTAINED BETWEEN SANITARY SEWER & ANY PRIVATE OR PUBLIC WATER SUPPLY SOURCE SUCH AS AN IMPOUNDED RESERVOIR USED AS A SOURCE OF DRINKING WATER. IF ADEQUATE LATERAL SEPARATION CANNOT BE ACHIEVED, FERROUS SANITARY SEWER PIPE SHALL BE SPECIFIED & INSTALLED TO WATERLINE SPECIFICATIONS. HOWEVER, THE MINIMUM SEPARATION SHALL NOT BE LESS THAN 25' FROM A PRIVATE WELL OR 50' FROM A PUBLIC WELL.

   b) WHEN INSTALLING WATER &/OR SEWER MAINS, THE HORIZONTAL SEPARATION BETWEEN UTILITIES SHALL BE 10'. IF THIS SEPARATION CANNOT BE MAINTAINED DUE TO EXISTING CONDITIONS, THE VARIATION ALLOWED IS THE WATER MAIN IN A SEPARATE TRENCH WITH THE ELEVATION OF THE WATER MAIN AT LEAST 18" ABOVE THE TOP OF THE SEWER & MUST BE APPROVED BY THE PUBLIC UTILITIES DIRECTOR. ALL DISTANCES ARE MEASURED FROM OUTSIDE DIAMETER TO OUTSIDE DIAMETER.

   c) WHERE IT IS IMPOSSIBLE TO OBTAIN PROPER SEPARATION, OR ANYTIME A SANITARY SEWER PASSES OVER A WATERMAIN, DIP MATERIALS OR STEEL ENCASEMENT EXTENDED 10' ON EACH SIDE OF CROSSING MUST BE SPECIFIED & INSTALLED TO WATERLINE SPECIFICATIONS.

   d) 5.0' MINIMUM HORIZONTAL SEPARATION IS REQUIRED BETWEEN ALL SANITARY SEWER & STORM SEWER FACILITIES, UNLESS DIP MATERIAL IS SPECIFIED FOR SANITARY SEWER.

   e) MAINTAIN 18" MIN. VERTICAL SEPARATION AT ALL WATERMAIN & RCP STORM DRAIN CROSSINGS; MAINTAIN 24" MIN. VERTICAL SEPARATION AT ALL SANITARY SEWER & RCP STORM DRAIN CROSSINGS. WHERE ADEQUATE SEPARATIONS CANNOT BE ACHIEVED, SPECIFY DIP MATERIALS & A CONCRETE CRADLE HAVING 6" MIN. CLEARANCE (PER CORPUD DETAILS W-41 & S-49).

   f) ALL OTHER UNDERGROUND UTILITIES SHALL CROSS WATER & SEWER FACILITIES WITH 18" MIN. VERTICAL SEPARATION REQUIRED.

3. ANY NECESSARY FIELD REVISIONS ARE SUBJECT TO REVIEW & APPROVAL OF AN AMENDED PLAN &/OR PROFILE BY THE CITY OF RALEIGH PUBLIC UTILITIES DEPARTMENT PRIOR TO CONSTRUCTION.

4. CONTRACTOR SHALL MAINTAIN CONTINUOUS WATER & SEWER SERVICE TO EXISTING RESIDENCES & BUSINESSES THROUGHOUT CONSTRUCTION OF PROJECT. ANY NECESSARY SERVICE INTERRUPTIONS SHALL BE PRECEDED BY A 24 HOUR ADVANCE NOTICE TO THE CITY OF RALEIGH PUBLIC UTILITIES DEPARTMENT.

5. 3.0' MINIMUM COVER IS REQUIRED ON ALL WATER MAINS & SEWER FORCEMAINS. 4.0' MINIMUM COVER IS REQUIRED ON ALL REUSE MAINS.

6. IT IS THE DEVELOPER'S RESPONSIBILITY TO ABANDON OR REMOVE EXISTING WATER & SEWER SERVICES NOT BEING USED IN REDEVELOPMENT OF A SITE UNLESS OTHERWISE DIRECTED BY THE CITY OF RALEIGH PUBLIC UTILITIES DEPARTMENT. THIS INCLUDES ABANDONING TAP AT MAIN & REMOVAL OF SERVICE FROM ROW OR EASEMENT PER CORPUD HANDBOOK PROCEDURE.

7. INSTALL 3/4" COPPER WATER SERVICES WITH METERS LOCATED AT ROW OR WITHIN A 2'X2' WATERLINE EASEMENT IMMEDIATELY ADJACENT. NOTE: IT IS THE APPLICANT'S RESPONSIBILITY TO PROPERLY SIZE THE WATER SERVICE FOR EACH CONNECTION TO PROVIDE ADEQUATE FLOW & PRESSURE.

8. INSTALL 4" SEWER SERVICES @ 1.0% MINIMUM GRADE WITH CLEANOUTS LOCATED AT ROW OR EASEMENT LINE & SPACED EVERY 75 LINEAR FEET MAXIMUM.

9. PRESSURE REDUCING VALVES ARE REQUIRED ON ALL WATER SERVICES EXCEEDING 80 PSI. WHERE SANITARY SERVICES ARE SERVING A BUILDING INSTALLED ON A FLOOR WITH A FINISHED FLOOR ELEVATION BELOW THE ELEVATION OF THE MANHOLE COVER OF THE NEXT UPSTREAM MANHOLE IN THE PUBLIC SEWER, SUCH FIXTURES SHALL BE PROTECTED BY A BACKWATER VALVE INSTALLED IN THE SERVICE LINE. SANITARY SERVICES SERVING A BUILDING WITH A FINISHED FLOOR ELEVATION ABOVE THE ELEVATION OF THE MANHOLE COVER OF THE NEXT UPSTREAM MANHOLE IN THE PUBLIC SEWER SHALL NOT DISCHARGE THROUGH A BACKWATER VALVE.

10. ALL ENVIRONMENTAL PERMITS APPLICABLE TO THE PROJECT MUST BE OBTAINED FROM NCDWQ, USACE &/OR FEMA FOR ANY RIPARIAN BUFFER, WETLAND &/OR FLOODPLAIN IMPACTS (RESPECTIVELY) PRIOR TO CONSTRUCTION.

11. NCDOT / RAILROAD ENCROACHMENT AGREEMENTS ARE REQUIRED FOR ANY UTILITY WORK (INCLUDING MAIN EXTENSIONS & SERVICE TAPS) WITHIN STATE OR RAILROAD ROW PRIOR TO CONSTRUCTION.

12. GREASE INTERCEPTOR / OIL WATER SEPARATOR SIZING CALCULATIONS & INSTALLATION SPECIFICATIONS SHALL BE APPROVED BY THE CORPUD FOG PROGRAM COORDINATOR PRIOR TO ISSUANCE OF A BUILDING PERMIT. CONTACT STEPHEN CALVERLEY AT (919) 296-2334 OR STEPHEN.CALVERLEY@RALEIGHNC.GOV FOR MORE INFORMATION.

13. CROSS-CONNECTION CONTROL PROTECTION DEVICES ARE REQUIRED BASED ON DEGREE OF HEALTH HAZARD INVOLVED AS LISTED IN APPENDIX-B OF THE RULES GOVERNING PUBLIC WATER SYSTEMS IN NORTH CAROLINA. THESE GUIDELINES ARE THE MINIMUM REQUIREMENTS. THE DEVICES SHALL MEET AMERICAN SOCIETY OF SANITARY ENGINEERING (ASSE) STANDARDS OR BE ON THE UNIVERSITY OF SOUTHERN CALIFORNIA APPROVAL LIST. THE DEVICES SHALL BE INSTALLED AND TESTED (BOTH INITIAL AND PERIODIC TESTING THEREAFTER) IN ACCORDANCE WITH THE MANUFACTURER'S RECOMMENDATIONS OR THE LOCAL CROSS-CONNECTION CONTROL PROGRAM, WHICHEVER IS MORE STRINGENT. CONTACT JOANIE HARTLEY AT (919) 996-5923 OR JOANIE.HARTLEY@RALEIGHNC.GOV FOR MORE INFORMATION.

SITE PERMITTING APPROVAL

Water and Sewer Permits (if applicable)

The City of Raleigh consents to the connection and extension of the City's Public Sewer System as shown on this plan. The material and Construction methods used for this project shall conform to the standards and specifications of the City's Public Utilities Handbook. City of Raleigh Public Utilities Department Permit # _____

The City of Raleigh consents to the connection and extension of the City's Public Water System as shown on this plan. The material and Construction methods used for this project shall conform to the standards and specifications of the City's Public Utilities Handbook. City of Raleigh Public Utilities Department Permit # _____

The City of Raleigh consents to the connection to its public sewer system and extension of the private sewer collection system as shown on this plan. The material and constructions methods used for this project shall conform to the standards and specifications of the City's Public Utilities Handbook.
City of Raleigh Public Utilities Department Permit # _____

GRAPHIC SCALE
0 50 100 200
1 inch = 100 ft.

FINAL DRAWING - NOT RELEASED FOR CONSTRUCTION

MCADAMS
The John R. McAdams Company, Inc.
2905 Meridian Parkway
Durham, NC 27713

phone 919. 361. 5000
fax 919. 361. 2269
license number: C-0293, C-187

www.mcadamsco.com

CLIENT

ASHTON WOODS
5711 SIX FORKS ROAD, SUITE 300
RALEIGH, NORTH CAROLINA 27609

ASHTON WOODS

THE POINT
PHASES 11-13
CONSTRUCTION DRAWINGS
EAST YOUNG STREET
TOWN OF ROLESVILLE, WAKE FOREST TOWNSHIP, WAKE COUNTY, NORTH CAROLINA

CD XX-XX

NORTH CAROLINA PROFESSIONAL SEAL 22630 ENGINEER WILLIAM T. O'DANIEL
NOT FOR CONSTRUCTION

REVISIONS

NO. DATE

PLAN INFORMATION

PROJECT NO.	AWH-20000
FILENAME	AWH20000-NORTH-OAU1
CHECKED BY	.
DRAWN BY	.
SCALE	1"=100'
DATE	10. 27. 2022

SHEET

OVERALL UTILITY PLAN

C4.00

M:\Projects\AWH\AWH-20000\04-Production\Engineering\The Point North\Current Drawings\AWH20000-North-OAU1.dwg, 10/27/2022 9:01:11 AM, Williams, 1:1

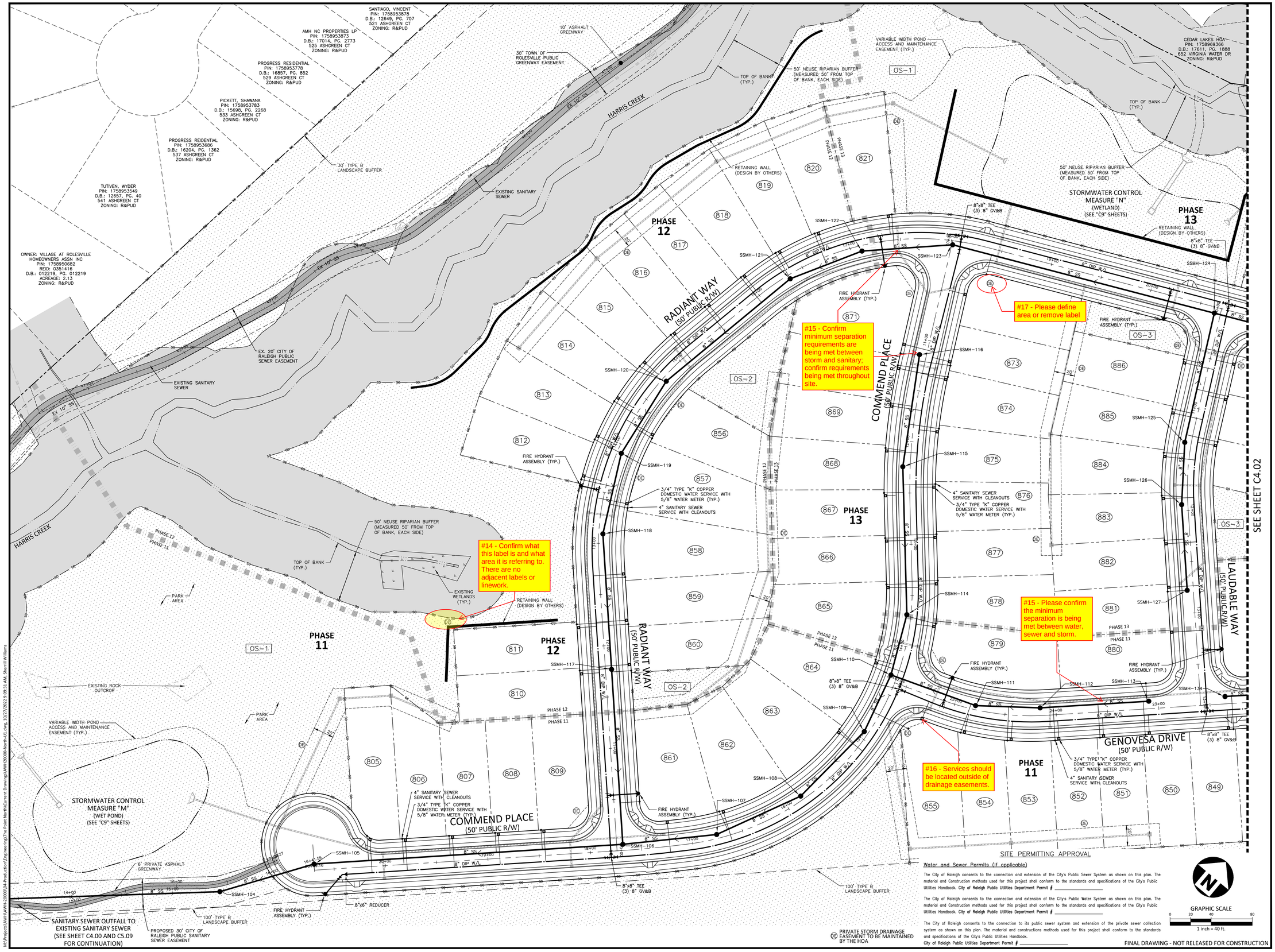

SITE PERMITTING APPROVAL

Water and Sewer Permits (If applicable)

The City of Raleigh consents to the connection and extension of the City's Public Sewer System as shown on this plan. The material and Construction methods used for this project shall conform to the standards and specifications of the City's Public Utilities Handbook. City of Raleigh Public Utilities Department Permit # _____

The City of Raleigh consents to the connection and extension of the City's Public Water System as shown on this plan. The material and Construction methods used for this project shall conform to the standards and specifications of the City's Public Utilities Handbook. City of Raleigh Public Utilities Department Permit # _____

The City of Raleigh consents to the connection to its public sewer system and extension of the private sewer collection system as shown on this plan. The material and constructions methods used for this project shall conform to the standards and specifications of the City's Public Utilities Handbook.
City of Raleigh Public Utilities Department Permit # _____

GRAPHIC SCALE
0 20 40 80
1 inch = 40 ft.

FINAL DRAWING - NOT RELEASED FOR CONSTRUCTION

McADAMS
The John R. McAdams Company, Inc.
2905 Meridian Parkway
Durham, NC 27713

phone 919. 361. 5000
fax 919. 361. 2269
license number: C-0293, C-187

www.mcadamsco.com

CLIENT

ASHTON WOODS
5711 SIX FORKS ROAD, SUITE 300
RALEIGH, NORTH CAROLINA 27609

ASHTON WOODS

THE POINT PHASES 11-13

CONSTRUCTION DRAWINGS
EAST YOUNG STREET
TOWN OF ROLESVILLE, WAKE FOREST TOWNSHIP,
WAKE COUNTY, NORTH CAROLINA

CD XX-XX

NORTH CAROLINA PROFESSIONAL SEAL 22630 ENGINEER WILLIAM T. O'DANIEL
NOT FOR CONSTRUCTION

REVISIONS

NO. DATE

PLAN INFORMATION

PROJECT NO.	AWH-20000
FILENAME	AWH20000-NORTH-U1
CHECKED BY	.
DRAWN BY	.
SCALE	1"=40'
DATE	10. 27. 2022

SHEET

UTILITY PLAN
AREA "A"

C4.01

M:\Projects\AWH\AWH-20000\04-Production\Engineering\The Point North\Current Drawings\AWH20000-North-U1.dwg, 10/27/2022 9:09:22 AM, Williams, 1:1

M:\Projects\AWH\AWH-20000\04-Production\Engineering\The Point North\Current Drawings\AWH20000-North-U1.dwg, 10/27/2022 9:09:31 AM, Sherrill Williams

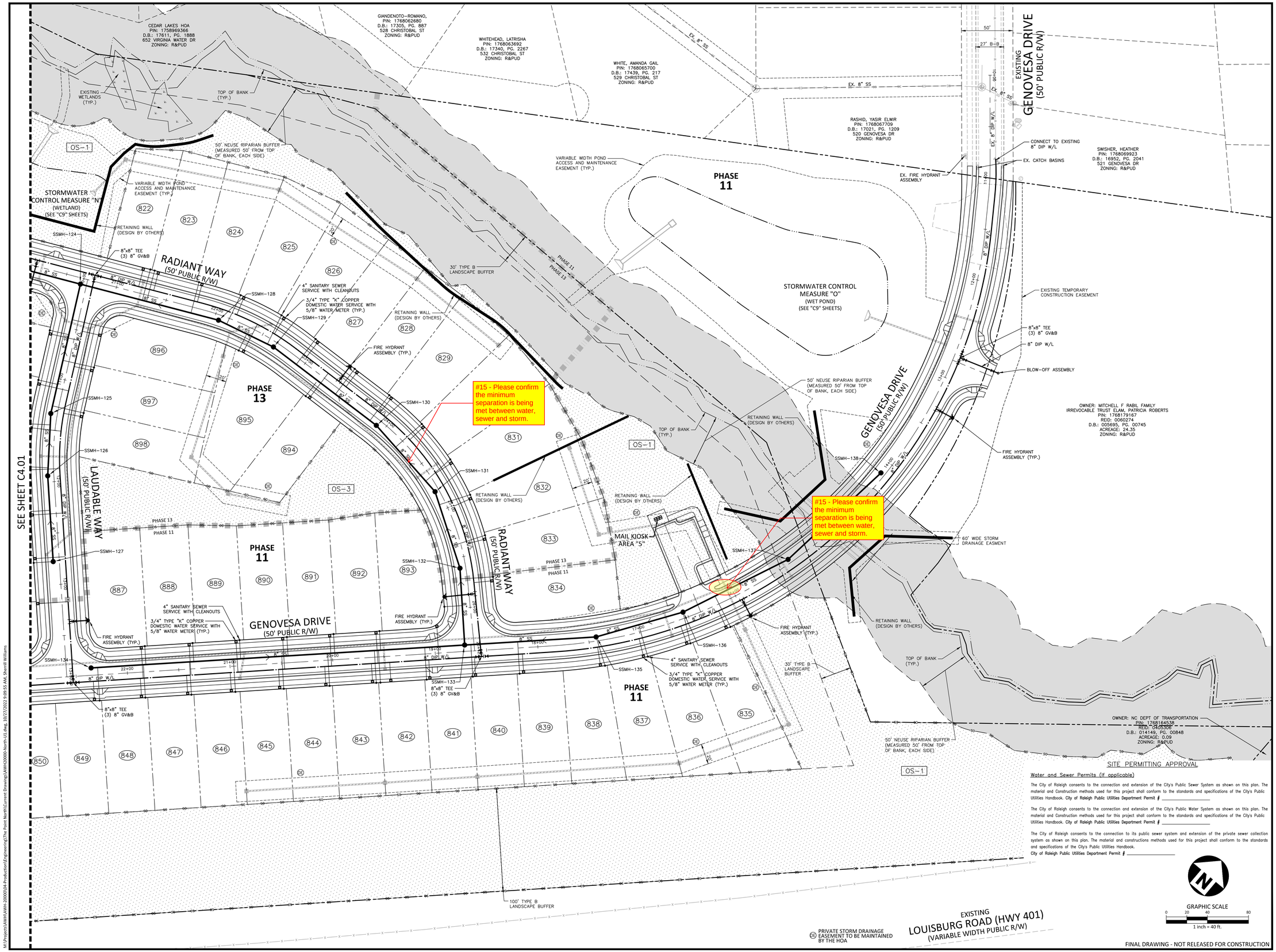

SITE PERMITTING APPROVAL

Water and Sewer Permits (If applicable)

The City of Raleigh consents to the connection and extension of the City's Public Sewer System as shown on this plan. The material and Construction methods used for this project shall conform to the standards and specifications of the City's Public Utilities Handbook. City of Raleigh Public Utilities Department Permit # _____

The City of Raleigh consents to the connection and extension of the City's Public Water System as shown on this plan. The material and Construction methods used for this project shall conform to the standards and specifications of the City's Public Utilities Handbook. City of Raleigh Public Utilities Department Permit # _____

The City of Raleigh consents to the connection to its public sewer system and extension of the private sewer collection system as shown on this plan. The material and constructions methods used for this project shall conform to the standards and specifications of the City's Public Utilities Handbook.
City of Raleigh Public Utilities Department Permit # _____

FINAL DRAWING - NOT RELEASED FOR CONSTRUCTION

McADAMS
The John R. McAdams Company, Inc.
2905 Meridian Parkway
Durham, NC 27713

phone 919. 361. 5000
fax 919. 361. 2269
license number: C-0293, C-187

www.mcadamsco.com

CLIENT

ASHTON WOODS
5711 SIX FORKS ROAD, SUITE 300
RALEIGH, NORTH CAROLINA 27609

ASHTON WOODS

THE POINT
PHASES 11-13
CONSTRUCTION DRAWINGS
EAST YOUNG STREET
TOWN OF ROLESVILLE, WAKE FOREST TOWNSHIP, WAKE COUNTY, NORTH CAROLINA

CD XX-XX

NORTH CAROLINA PROFESSIONAL SEAL 22630 ENGINEER WILLIAM T. O'DANIEL
NOT FOR CONSTRUCTION

REVISIONS

NO.	DATE

PLAN INFORMATION

PROJECT NO.	AWH-20000
FILENAME	AWH20000-NORTH-U1
CHECKED BY	.
DRAWN BY	.
SCALE	1"=40'
DATE	10. 27. 2022

SHEET

UTILITY PLAN
AREA "B"
C4.02

M:\Projects\AWH\AWH-20000\04-Production\Engineering\The Point North\Current Drawings\AWH20000-North-U1.dwg, 10/27/2022 9:09:46 AM, Williams, 1:1

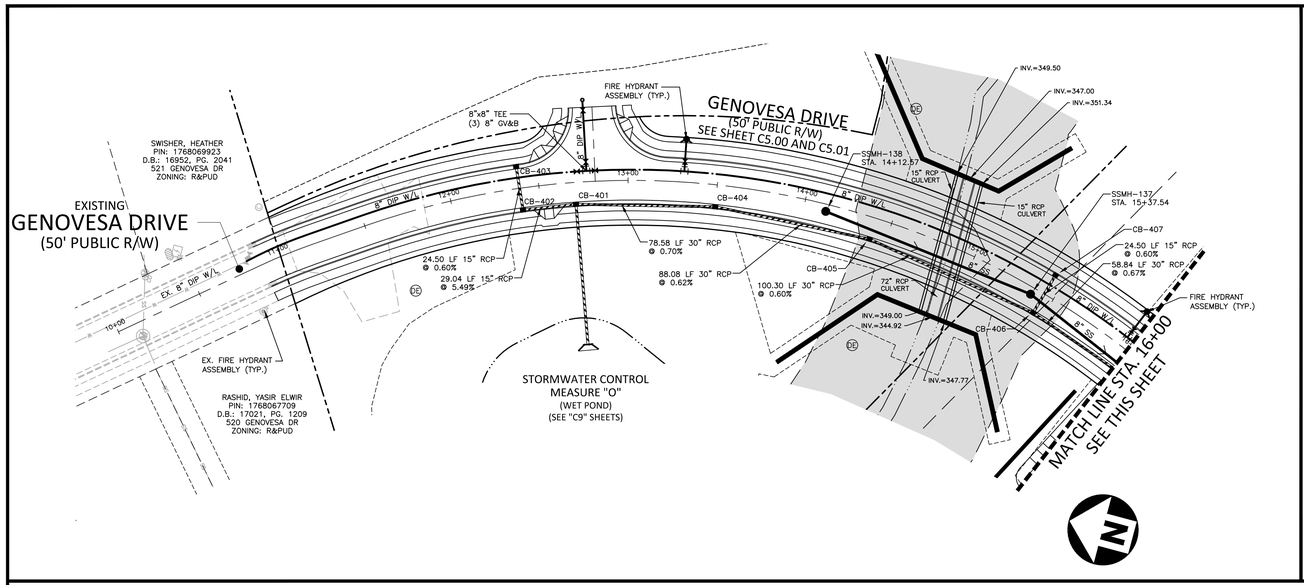

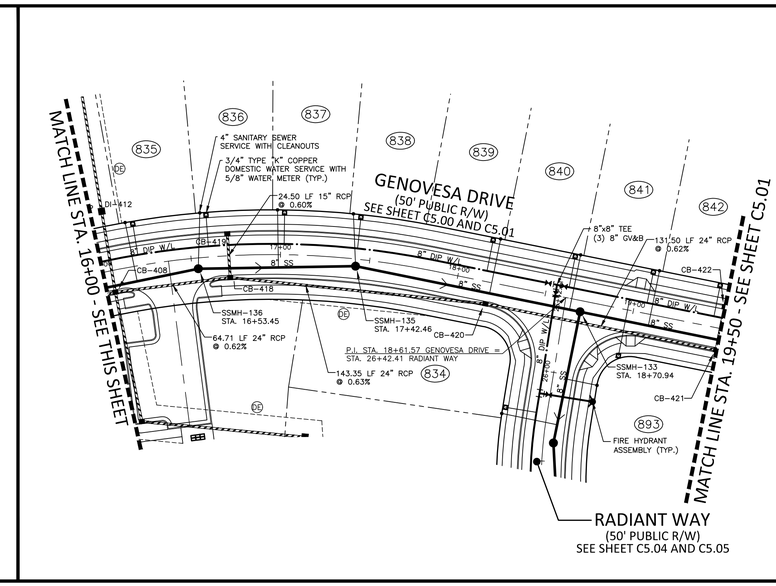

CB-401
STA. 12+69.24
T/C=379.69
INV IN=374.11 (CB-402)
INV IN=358.40 (CB-404)
INV OUT=358.20

CB-402
STA. 12+39.38
T/C=380.72
INV IN=375.80 (CB-403)
INV OUT=375.70

CB-403
STA. 12+38.94
T/C=380.73
INV OUT=375.95

CB-404
STA. 13+50.12
T/C=377.49
INV IN=359.05 (CB-405)
INV OUT=358.95

CB-405
STA. 14+40.81
T/C=375.91
INV IN=359.70 (CB-406)
INV OUT=359.60

CB-406
STA. 15+44.15
T/C=375.29
INV IN=360.40 (CB-408)
INV IN=370.35 (CB-407)
INV OUT=360.30

CB-407
STA. 15+44.15
T/C=375.29
INV OUT=370.50

CB-408
STA. 16+04.68
T/C=375.50
INV IN=361.30 (CB-418)
INV IN=365.30 (DI-412)
INV IN=366.10 (CB-409)
INV OUT=360.80

CB-418
STA. 16+71.27
T/C=376.21
INV IN=361.79 (CB-420)
INV IN=371.30 (CB-419)
INV OUT=361.69

CB-419
STA. 16+70.92
T/C=376.21
INV OUT=371.45

CB-420
STA. 18+18.18
T/C=376.81
INV IN=362.80 (CB-421)
INV OUT=362.70

(DE) PRIVATE STORM DRAINAGE EASEMENT TO BE MAINTAINED BY THE HOA

GRAPHIC SCALE
0 20 40 80
1 inch = 40 ft.

GENOVESA DRIVE

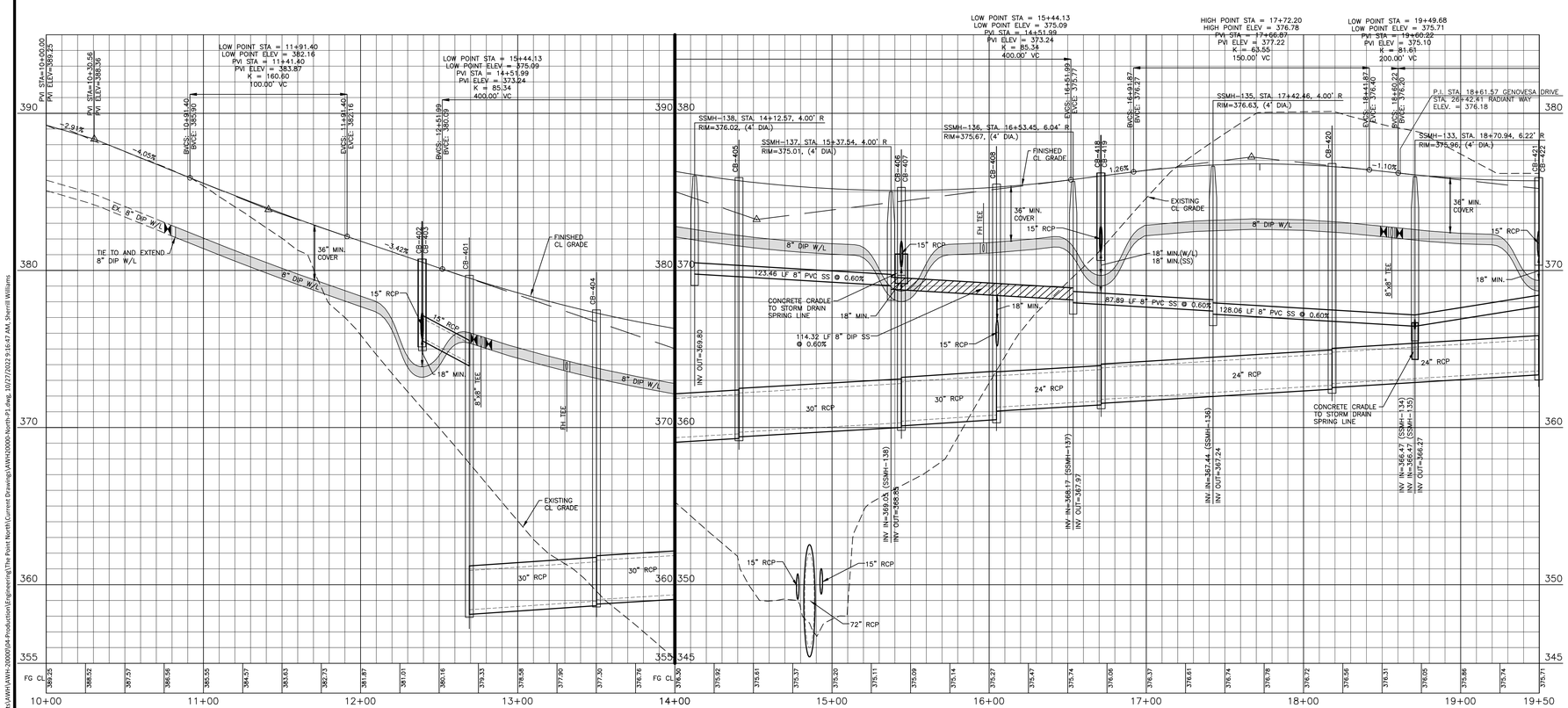

SITE PERMITTING APPROVAL

Water and Sewer Permits (If applicable)

The City of Raleigh consents to the connection and extension of the City's Public Sewer System as shown on this plan. The material and Construction methods used for this project shall conform to the standards and specifications of the City's Public Utilities Handbook. City of Raleigh Public Utilities Department Permit # _____

The City of Raleigh consents to the connection and extension of the City's Public Water System as shown on this plan. The material and Construction methods used for this project shall conform to the standards and specifications of the City's Public Utilities Handbook. City of Raleigh Public Utilities Department Permit # _____

The City of Raleigh consents to the connection to its public sewer system and extension of the private sewer collection system as shown on this plan. The material and constructions methods used for this project shall conform to the standards and specifications of the City's Public Utilities Handbook.
City of Raleigh Public Utilities Department Permit # _____

FINAL DRAWING - NOT RELEASED FOR CONSTRUCTION

McADAMS

The John R. McAdams Company, Inc.
2905 Meridian Parkway
Durham, NC 27713

phone 919. 361. 5000
fax 919. 361. 2269
license number: C-0293, C-187

www.mcadamsco.com

CLIENT
ASHTON RALEIGH RESIDENTIAL, LLC.
5711 SIX FORKS ROAD, SUITE 300
RALEIGH, NORTH CAROLINA 27609
PHONE: 919. 232. 3695
CONTACT: BOB MISHLER

ASHTON WOODS

REVISIONS
NO. DATE

NORTH CAROLINA PROFESSIONAL SEAL 22630 ENGINEER WILLIAM T. O'DANIEL
FOR REVIEW NOT FOR CONSTRUCTION

THE POINT PHASES 11-13

CONSTRUCTION DRAWINGS

TOWN OF ROLESVILLE, WAKE FOREST TOWNSHIP,
WAKE COUNTY, NORTH CAROLINA

PLAN INFORMATION

PROJECT NO.	AWH-20000
FILENAME	AWH20000-NORTH-P1
CHECKED BY	.
DRAWN BY	.
SCALE	1"=40'/1"=4'
DATE	10. 27. 2022

PLAN AND PROFILE
GENOVESA DRIVE, STA. 10+00 THRU STA. 19+50

C5.00

M:\Projects\AWH\AWH-20000\04-Production\Engineering\The Point North\Current Drawings\AWH20000-North-P1.dwg, 10/27/2022 9:16:47 AM, Sherrill Williams

M:\Projects\AWH\AWH-20000\04-Production\Engineering\The Point North\Current Drawings\AWH20000-North-P1.dwg, 10/27/2022 9:16:25 AM, Williams, 1:1

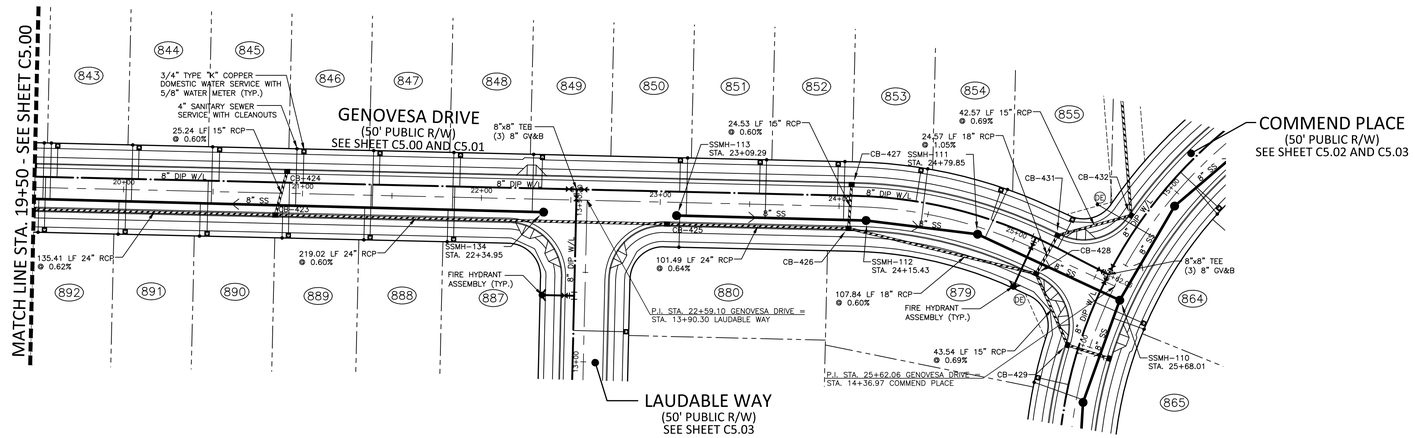

CB-423
STA. 20+85.08
T/C=376.99
INV IN=364.65 (CB-425)
INV IN=372.15 (CB-424)
INV OUT=364.55

CB-424
STA. 20+91.14
T/C=377.08
INV OUT=372.30

CB-425
STA. 23+04.10
T/C=377.94
INV IN=366.05 (CB-426)
INV OUT=365.95

CB-426
STA. 24+05.59
T/C=376.47
INV IN=367.20 (CB-428)
INV IN=371.55 (CB-427)
INV OUT=366.70

CB-427
STA. 24+06.75
T/C=376.45
INV OUT=371.70

CB-429
STA. 25+52.08
T/C=374.06
INV IN=369.15 (CB-430)
INV OUT=369.05

CB-430
STA. ???
T/C=374.05
INV OUT=369.30

CB-431
STA. 25+21.25
T/C=374.71
INV IN=368.45 (CB-432)
INV OUT=368.20

DE PRIVATE STORM DRAINAGE EASEMENT TO BE MAINTAINED BY THE HOA

GRAPHIC SCALE
0 20 40 80
1 inch = 40 ft.

GENOVESA DRIVE

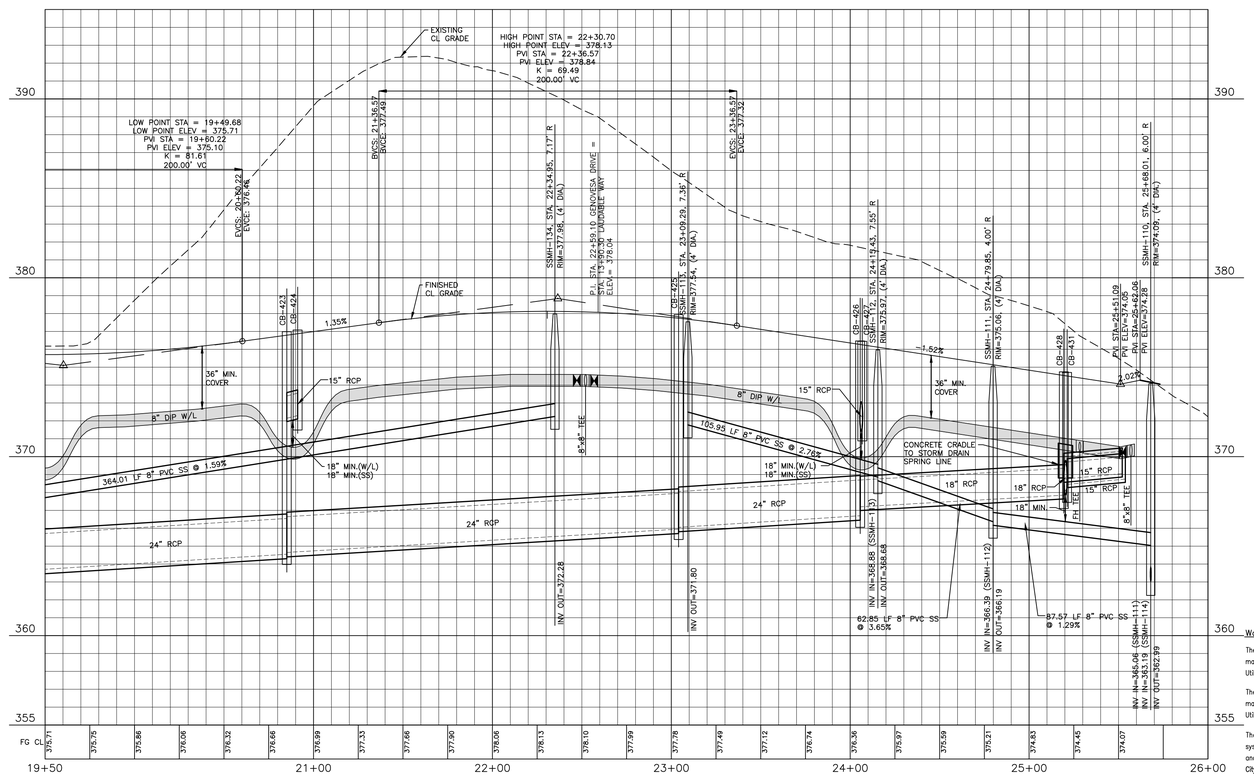

SITE PERMITTING APPROVAL

Water and Sewer Permits (If applicable)

The City of Raleigh consents to the connection and extension of the City's Public Sewer System as shown on this plan. The material and Construction methods used for this project shall conform to the standards and specifications of the City's Public Utilities Handbook. City of Raleigh Public Utilities Department Permit # _____

The City of Raleigh consents to the connection and extension of the City's Public Water System as shown on this plan. The material and Construction methods used for this project shall conform to the standards and specifications of the City's Public Utilities Handbook. City of Raleigh Public Utilities Department Permit # _____

The City of Raleigh consents to the connection to its public sewer system and extension of the private sewer collection system as shown on this plan. The material and constructions methods used for this project shall conform to the standards and specifications of the City's Public Utilities Handbook.
City of Raleigh Public Utilities Department Permit # _____

FINAL DRAWING - NOT RELEASED FOR CONSTRUCTION

The John R. McAdams Company, Inc.
2905 Meridian Parkway
Durham, NC 27713

phone 919. 361. 5000
fax 919. 361. 2269
license number: C-0293, C-187

www.mcadamsco.com

CLIENT
ASHTON RALEIGH RESIDENTIAL, LLC.
5711 SIX FORKS ROAD, SUITE 300
RALEIGH, NORTH CAROLINA 27609
PHONE: 919. 232. 3695
CONTACT: BOB MISHLER

REVISIONS
NO. DATE

NORTH CAROLINA PROFESSIONAL SEAL 22630 ENGINEER WILLIAM T. O'DANIEL
NOT FOR CONSTRUCTION

THE POINT PHASES 11-13

CONSTRUCTION DRAWINGS

TOWN OF ROLESVILLE, WAKE FOREST TOWNSHIP,
WAKE COUNTY, NORTH CAROLINA

PLAN INFORMATION

PROJECT NO.	AWH-20000
FILENAME	AWH20000-NORTH-P1
CHECKED BY	.
DRAWN BY	.
SCALE	1"=40'/1"=4'
DATE	10. 27. 2022

PLAN AND PROFILE
GENOVESA DRIVE, STA. 19+50 THRU STA. 26+00

C5.01

M:\Projects\AWH\AWH-20000\04-Production\Engineering\The Point North\Current Drawings\AWH20000-North-P1.dwg, 10/27/2022 9:17:01 AM, Williams, 1:1
M:\Projects\AWH\AWH-20000\04-Production\Engineering\The Point North\Current Drawings\AWH20000-North-P1.dwg, 10/27/2022 9:17:15 AM, Sherrill Williams

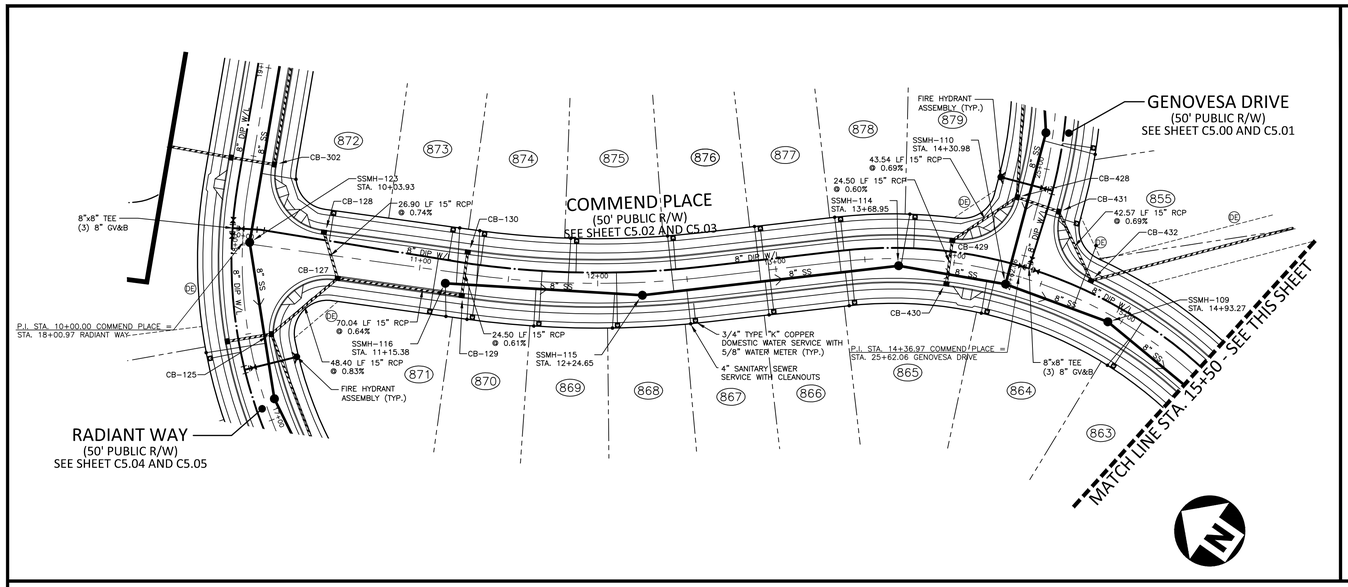

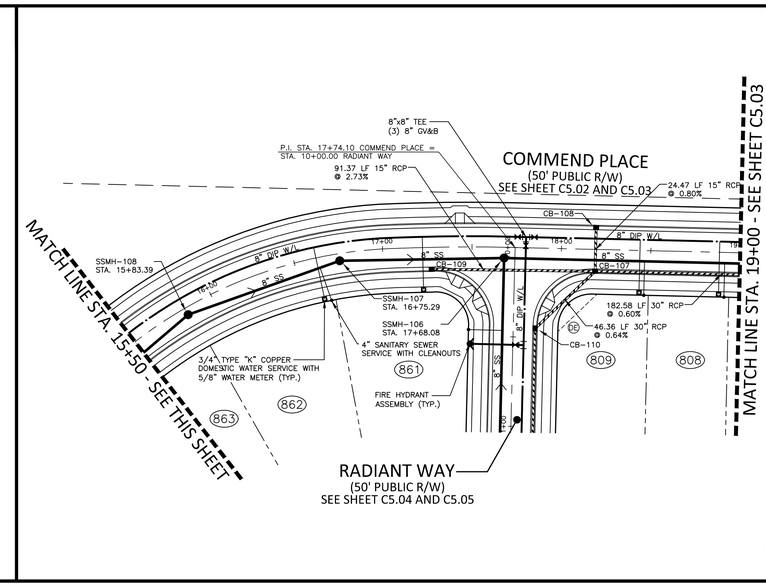

CB-107
STA. 18+19.13
T/C=372.61
INV IN=367.85 (CB-109)
INV IN=367.65 (CB-108)
INV IN=359.00 (CB-110)
INV OUT=358.90

CB-108
STA. 18+19.10
T/C=372.61
INV OUT=367.85

CB-109
STA. 17+27.20
T/C=375.13
INV OUT=370.35

CB-127
STA. 10+55.37
T/C=371.93
INV IN=366.95 (CB-128)
INV IN=366.50 (CB-129)
INV OUT=366.40

CB-128
STA. 10+44.25
T/C=371.96
INV OUT=367.15

CB-129
STA. 11+25.41
T/C=371.46
INV IN=367.05 (CB-130)
INV OUT=366.95

CB-130
STA. 11+25.41
T/C=371.46
INV OUT=367.20

CB-429
STA. 13+97.49
T/C=374.06
INV IN=369.15 (CB-430)
INV OUT=369.05

CB-430
STA. 13+97.24
T/C=374.05
INV OUT=369.30

CB-432
STA. 14+74.73
T/C=374.88
INV IN=368.85 (DI-433)
INV OUT=368.75

PRIVATE STORM DRAINAGE EASEMENT TO BE MAINTAINED BY THE HOA

GRAPHIC SCALE
0 20 40 80
1 inch = 40 ft.

COMMEND PLACE

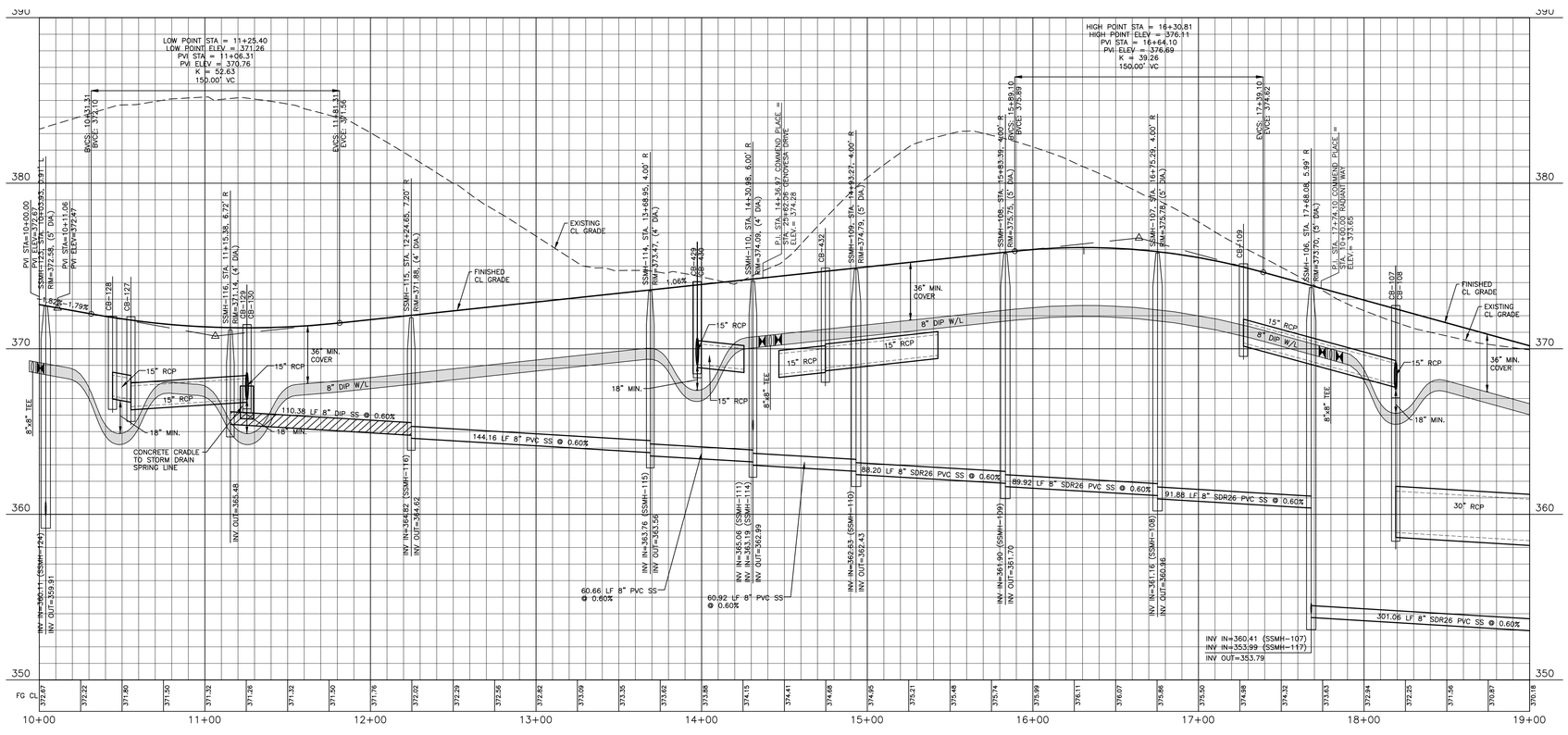

SITE PERMITTING APPROVAL

Water and Sewer Permits (If applicable)

The City of Raleigh consents to the connection and extension of the City's Public Sewer System as shown on this plan. The material and Construction methods used for this project shall conform to the standards and specifications of the City's Public Utilities Handbook. City of Raleigh Public Utilities Department Permit # _____

The City of Raleigh consents to the connection and extension of the City's Public Water System as shown on this plan. The material and Construction methods used for this project shall conform to the standards and specifications of the City's Public Utilities Handbook. City of Raleigh Public Utilities Department Permit # _____

The City of Raleigh consents to the connection to its public sewer system and extension of the private sewer collection system as shown on this plan. The material and constructions methods used for this project shall conform to the standards and specifications of the City's Public Utilities Handbook.
City of Raleigh Public Utilities Department Permit # _____

FINAL DRAWING - NOT RELEASED FOR CONSTRUCTION

MCADAMS

The John R. McAdams Company, Inc.
2905 Meridian Parkway
Durham, NC 27713

phone 919. 361. 5000
fax 919. 361. 2269
license number: C-0293, C-187

www.mcadamsco.com

CLIENT
ASHTON RALEIGH RESIDENTIAL, LLC.
5711 SIX FORKS ROAD, SUITE 300
RALEIGH, NORTH CAROLINA 27609
PHONE: 919. 232. 3695
CONTACT: BOB MISHLER

ASHTON WOODS

REVISIONS
NO. DATE

NORTH CAROLINA PROFESSIONAL ENGINEER SEAL 22630 WILLIAM T. O'DANIEL
FOR REVIEW NOT FOR CONSTRUCTION

THE POINT PHASES 11-13

CONSTRUCTION DRAWINGS

TOWN OF ROLESVILLE, WAKE FOREST TOWNSHIP,
WAKE COUNTY, NORTH CAROLINA

PLAN INFORMATION

PROJECT NO.	AWH-20000
FILENAME	AWH20000-NORTH-P1
CHECKED BY	.
DRAWN BY	.
SCALE	1"=40'/1"=4'
DATE	10. 27. 2022

PLAN AND PROFILE
COMMEND PLACE, STA. 10+00 THRU STA. 19+00

C5.02

M:\Projects\AWH\AWH-20000\04-Production\Engineering\The Point North\Current Drawings\AWH20000-North-P1.dwg, 10/27/2022 9:17:29 AM, Williams, 1:1

M:\Projects\AWH\AWH-20000\04-Production\Engineering\The Point North\Current Drawings\AWH20000-North-P1.dwg, 10/27/2022 9:17:51 AM, Sherrill Williams

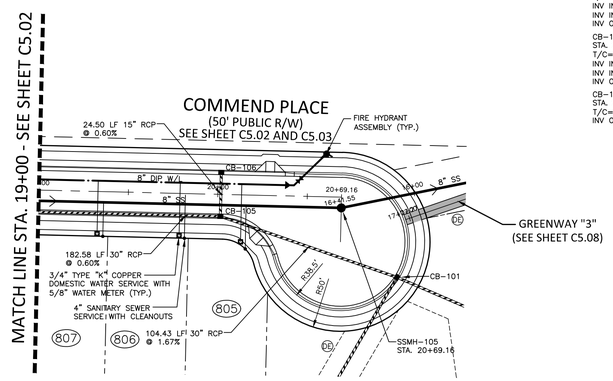

CB-101
STA. 21+01.18
T/C=364.55
INV IN=355.95 (CB-105)
INV IN=361.20 (11-102)
INV OUT=348.65

CB-105
STA. 20+01.71
T/C=367.58
INV IN=357.80 (CB-107)
INV IN=362.70 (CB-106)
INV OUT=357.70

CB-106
STA. 20+01.71
T/C=367.58
INV OUT=362.85

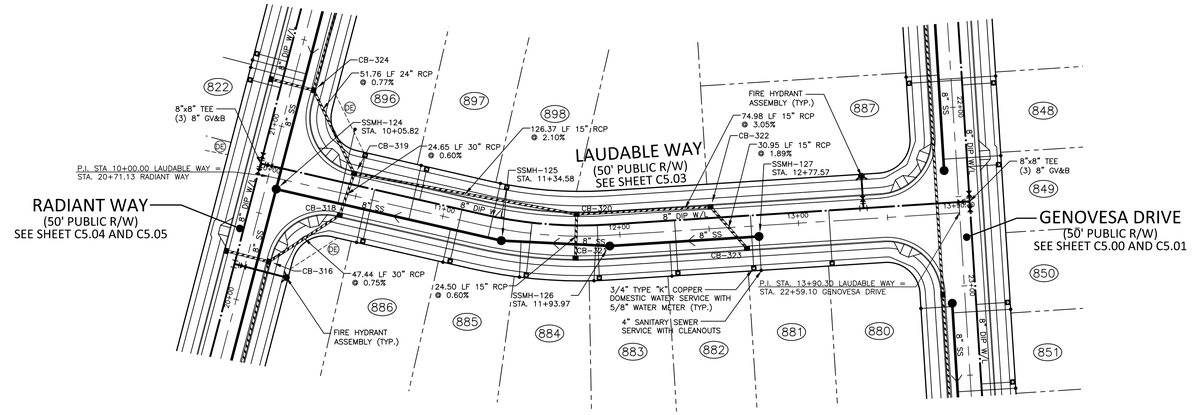

CB-318
STA. 10+43.69
T/C=369.45
INV IN=358.30 (CB-319)
INV OUT=358.20

CB-319
STA. 10+46.36
T/C=369.49
INV IN=364.70 (CB-320)
INV IN=361.45 (CB-324)
INV OUT=358.45

CB-320
STA. 11+75.65
T/C=372.39
INV IN=367.60 (CB-322)
INV IN=367.45 (CB-321)
INV OUT=367.35

CB-321
STA. 11+75.33
T/C=372.38
INV OUT=367.60

CB-322
STA. 12+51.53
T/C=374.74
INV IN=369.99 (CB-323)
INV OUT=369.89

CB-323
STA. 12+70.44
T/C=375.33
INV OUT=370.58

(DE) PRIVATE STORM DRAINAGE EASEMENT TO BE MAINTAINED BY THE HOA

GRAPHIC SCALE
0 20 40 80
1 inch = 40 ft.

COMMEND PLACE

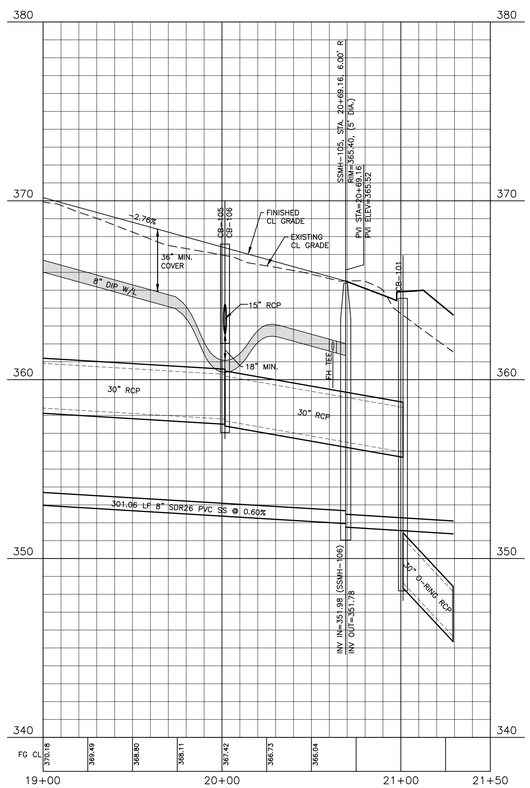

LAUDABLE WAY

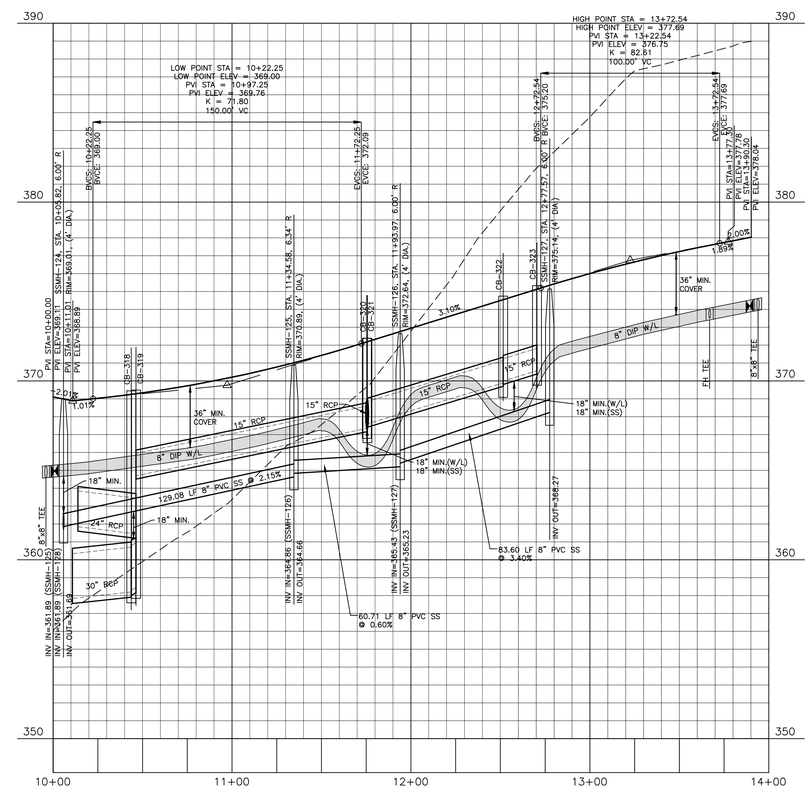

SITE PERMITTING APPROVAL

Water and Sewer Permits (If applicable)

The City of Raleigh consents to the connection and extension of the City's Public Sewer System as shown on this plan. The material and Construction methods used for this project shall conform to the standards and specifications of the City's Public Utilities Handbook. City of Raleigh Public Utilities Department Permit # _____

The City of Raleigh consents to the connection and extension of the City's Public Water System as shown on this plan. The material and Construction methods used for this project shall conform to the standards and specifications of the City's Public Utilities Handbook. City of Raleigh Public Utilities Department Permit # _____

The City of Raleigh consents to the connection to its public sewer system and extension of the private sewer collection system as shown on this plan. The material and constructions methods used for this project shall conform to the standards and specifications of the City's Public Utilities Handbook.
City of Raleigh Public Utilities Department Permit # _____

FINAL DRAWING - NOT RELEASED FOR CONSTRUCTION

MCADAMS

The John R. McAdams Company, Inc.
2905 Meridian Parkway
Durham, NC 27713

phone 919. 361. 5000
fax 919. 361. 2269
license number: C-0293, C-187

www.mcadamsco.com

CLIENT
ASHTON RALEIGH RESIDENTIAL, LLC.
5711 SIX FORKS ROAD, SUITE 300
RALEIGH, NORTH CAROLINA 27609
PHONE: 919. 232. 3695
CONTACT: BOB MISHLER
ASHTON WOODS

REVISIONS
NO. DATE

NORTH CAROLINA PROFESSIONAL SEAL 22630 ENGINEER WILLIAM T. O'DANIEL
FOR REVIEW NOT FOR CONSTRUCTION

THE POINT PHASES 11-13

CONSTRUCTION DRAWINGS

TOWN OF ROLESVILLE, WAKE FOREST TOWNSHIP,
WAKE COUNTY, NORTH CAROLINA

PLAN INFORMATION

PROJECT NO.	AWH-20000
FILENAME	AWH20000-NORTH-P1
CHECKED BY	.
DRAWN BY	.
SCALE	1"=40'/1"=4'
DATE	10. 27. 2022

PLAN AND PROFILE
COMMEND PLACE, STA. 19+00 THRU STA. 21+00
LAUDABLE WAY, STA. 10+00 THRU STA. 14+00

C5.03

M:\Projects\AWH\AWH-20000\04-Production\Engineering\The Point North\Current Drawings\AWH20000-North-P1.dwg, 10/27/2022 9:18:05 AM, Williams, 1:1

M:\Projects\AWH\AWH-20000\04-Production\Engineering\The Point North\Current Drawings\AWH20000-North-P1.dwg, 10/27/2022 9:18:32 AM, Sherrill Williams

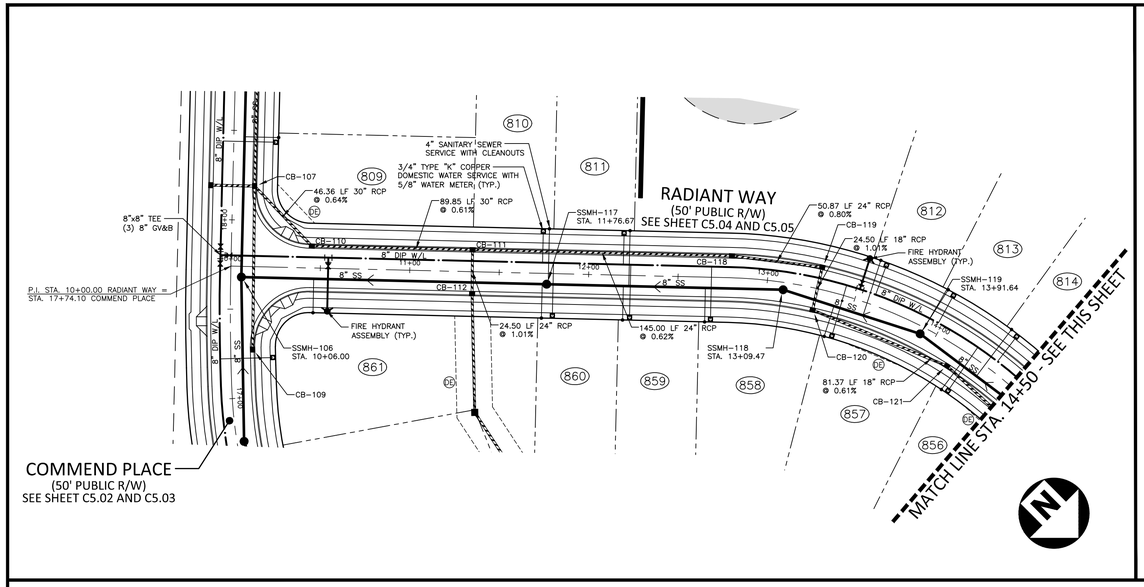

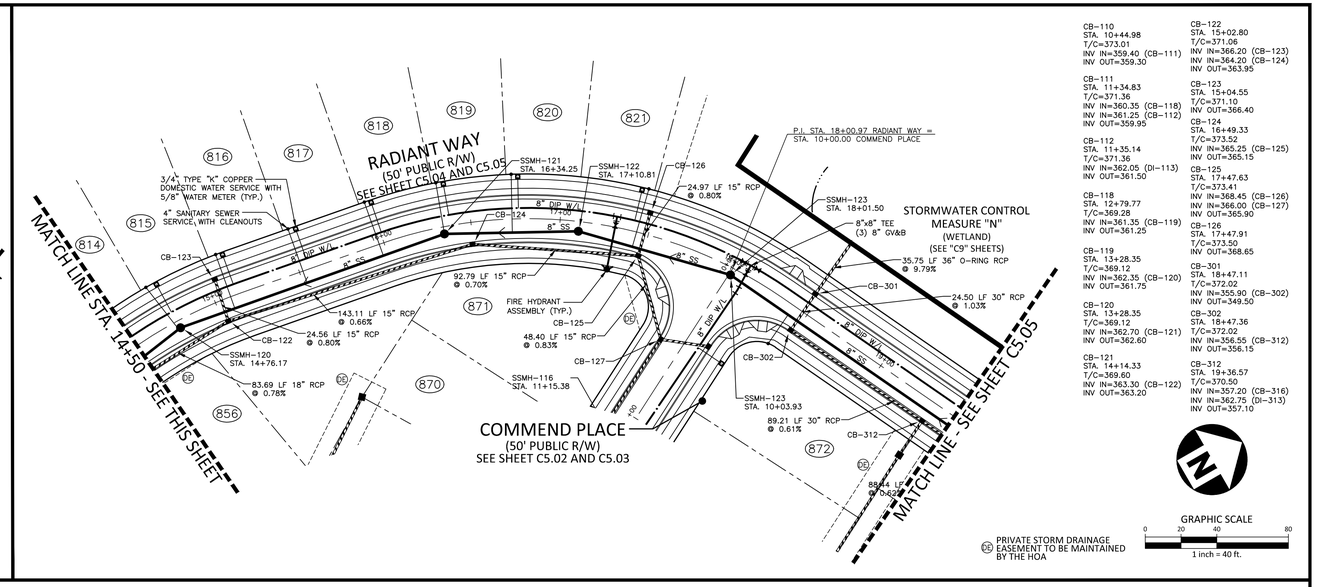

CB-110
STA. 10+44.98
T/C=373.01
INV IN=359.40 (CB-111)
INV OUT=359.30

CB-111
STA. 11+34.83
T/C=371.36
INV IN=360.35 (CB-118)
INV IN=361.25 (CB-112)
INV OUT=359.95

CB-112
STA. 11+35.14
T/C=371.36
INV IN=362.05 (DI-113)
INV OUT=361.50

CB-118
STA. 12+79.77
T/C=369.28
INV IN=361.35 (CB-119)
INV OUT=361.25

CB-119
STA. 13+28.35
T/C=369.12
INV IN=362.35 (CB-120)
INV OUT=361.75

CB-120
STA. 13+28.35
T/C=369.12
INV IN=362.70 (CB-121)
INV OUT=362.60

CB-121
STA. 14+14.33
T/C=369.60
INV IN=363.30 (CB-122)
INV OUT=363.20

CB-122
STA. 15+02.80
T/C=371.06
INV IN=366.20 (CB-123)
INV IN=364.20 (CB-124)
INV OUT=363.95

CB-123
STA. 15+04.55
T/C=371.10
INV OUT=366.40

CB-124
STA. 16+49.33
T/C=373.52
INV IN=365.25 (CB-125)
INV OUT=365.15

CB-125
STA. 17+47.63
T/C=373.41
INV IN=368.45 (CB-126)
INV IN=366.00 (CB-127)
INV OUT=365.90

CB-126
STA. 17+47.91
T/C=373.50
INV OUT=368.65

CB-301
STA. 18+47.11
T/C=372.02
INV IN=355.90 (CB-302)
INV OUT=349.50

CB-302
STA. 18+47.36
T/C=372.02
INV IN=356.55 (CB-312)
INV OUT=356.15

CB-312
STA. 19+36.57
T/C=370.50
INV IN=357.20 (CB-316)
INV IN=362.75 (DI-313)
INV OUT=357.10

DE PRIVATE STORM DRAINAGE EASEMENT TO BE MAINTAINED BY THE HOA

GRAPHIC SCALE
0 20 40 80
1 inch = 40 ft.

RADIANT WAY

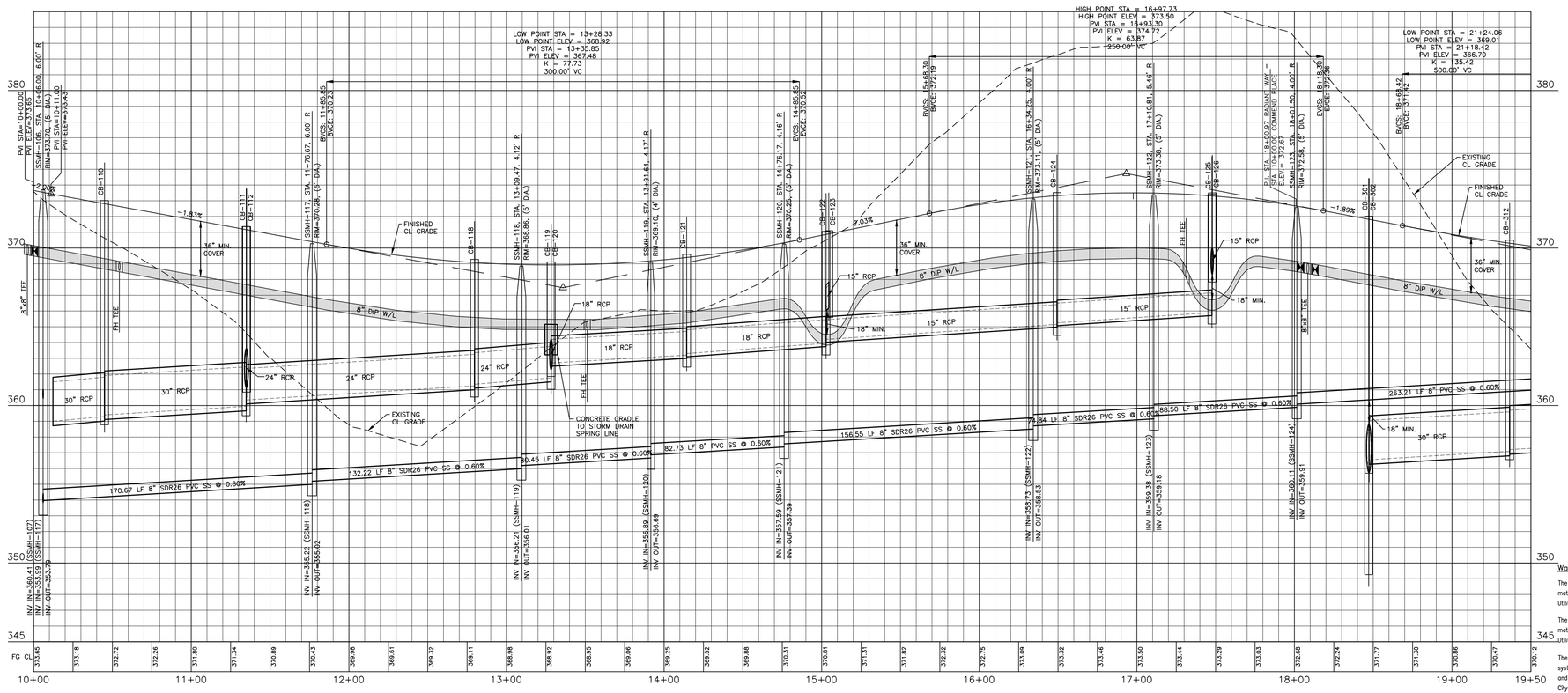

SITE PERMITTING APPROVAL

Water and Sewer Permits (If applicable)

The City of Raleigh consents to the connection and extension of the City's Public Sewer System as shown on this plan. The material and Construction methods used for this project shall conform to the standards and specifications of the City's Public Utilities Handbook. City of Raleigh Public Utilities Department Permit # _____

The City of Raleigh consents to the connection and extension of the City's Public Water System as shown on this plan. The material and Construction methods used for this project shall conform to the standards and specifications of the City's Public Utilities Handbook. City of Raleigh Public Utilities Department Permit # _____

The City of Raleigh consents to the connection to its public sewer system and extension of the private sewer collection system as shown on this plan. The material and constructions methods used for this project shall conform to the standards and specifications of the City's Public Utilities Handbook.
City of Raleigh Public Utilities Department Permit # _____

FINAL DRAWING - NOT RELEASED FOR CONSTRUCTION

McADAMS

The John R. McAdams Company, Inc.
2905 Meridian Parkway
Durham, NC 27713

phone 919. 361. 5000
fax 919. 361. 2269
license number: C-0293, C-187

www.mcadamsco.com

CLIENT
ASHTON RALEIGH RESIDENTIAL, LLC.
5711 SIX FORKS ROAD, SUITE 300
RALEIGH, NORTH CAROLINA 27609
PHONE: 919. 232. 3695
CONTACT: BOB MISHLER

ASHTON WOODS

REVISIONS
NO. DATE

NORTH CAROLINA PROFESSIONAL SEAL 22630 ENGINEER WILLIAM T. O'DANIEL
FOR CONSTRUCTION NOT FOR CONSTRUCTION

THE POINT PHASES 11-13

CONSTRUCTION DRAWINGS

TOWN OF ROLESVILLE, WAKE FOREST TOWNSHIP,
WAKE COUNTY, NORTH CAROLINA

PLAN INFORMATION

PROJECT NO.	AWH-20000
FILENAME	AWH20000-NORTH-P1
CHECKED BY	-
DRAWN BY	-
SCALE	1"=40'/1"=4'
DATE	10. 27. 2022

PLAN AND PROFILE
RADIANT WAY, STA. 10+00 THRU STA. 19+50

C5.04

M:\Projects\AWH\AWH-20000\04-Production\Engineering\The Point North\Current Drawings\AWH20000-North-P1.dwg, 10/27/2022 9:19:05 AM, Williams, 1:1

M:\Projects\AWH\AWH-20000\04-Production\Engineering\The Point North\Current Drawings\AWH20000-North-P1.dwg, 10/27/2022 9:19:27 AM, Sherrill Williams

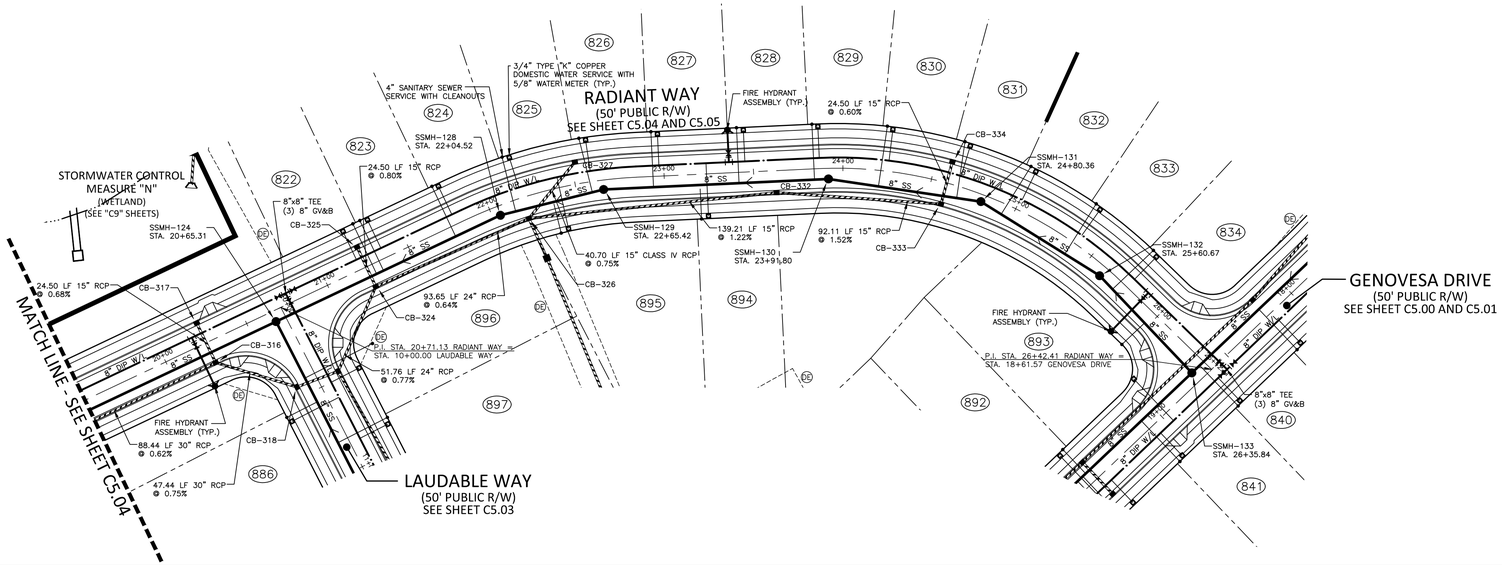

CB-316
STA. 20+25.01
T/C=369.57
INV IN=357.85 (CB-318)
INV IN=364.65 (CB-317)
INV OUT=357.75

CB-317
STA. 20+24.88
T/C=369.57
INV OUT=364.82

CB-324
STA. 21+24.08
T/C=369.21
INV IN=361.95 (CB-326)
INV IN=364.75 (CB-325)
INV OUT=361.85

CB-325
STA. 21+24.08
T/C=369.21
INV OUT=364.95

CB-326
STA. 22+19.47
T/C=369.54
INV IN=364.75 (CB-332)
INV IN=362.90 (DI-328)
INV IN=365.40 (CB-327)
INV OUT=362.55

CB-327
STA. 22+52.02
T/C=369.81
INV OUT=365.70

CB-332
STA. 23+62.32
T/C=371.30
INV IN=366.55 (CB-333)
INV OUT=366.45

CB-333
STA. 24+58.80
T/C=373.04
INV IN=368.05 (CB-334)
INV OUT=367.95

CB-334
STA. 24+58.70
T/C=373.04
INV OUT=368.20

DE PRIVATE STORM DRAINAGE EASEMENT TO BE MAINTAINED BY THE HOA

GRAPHIC SCALE
0 20 40 80
1 inch = 40 ft.

RADIANT WAY

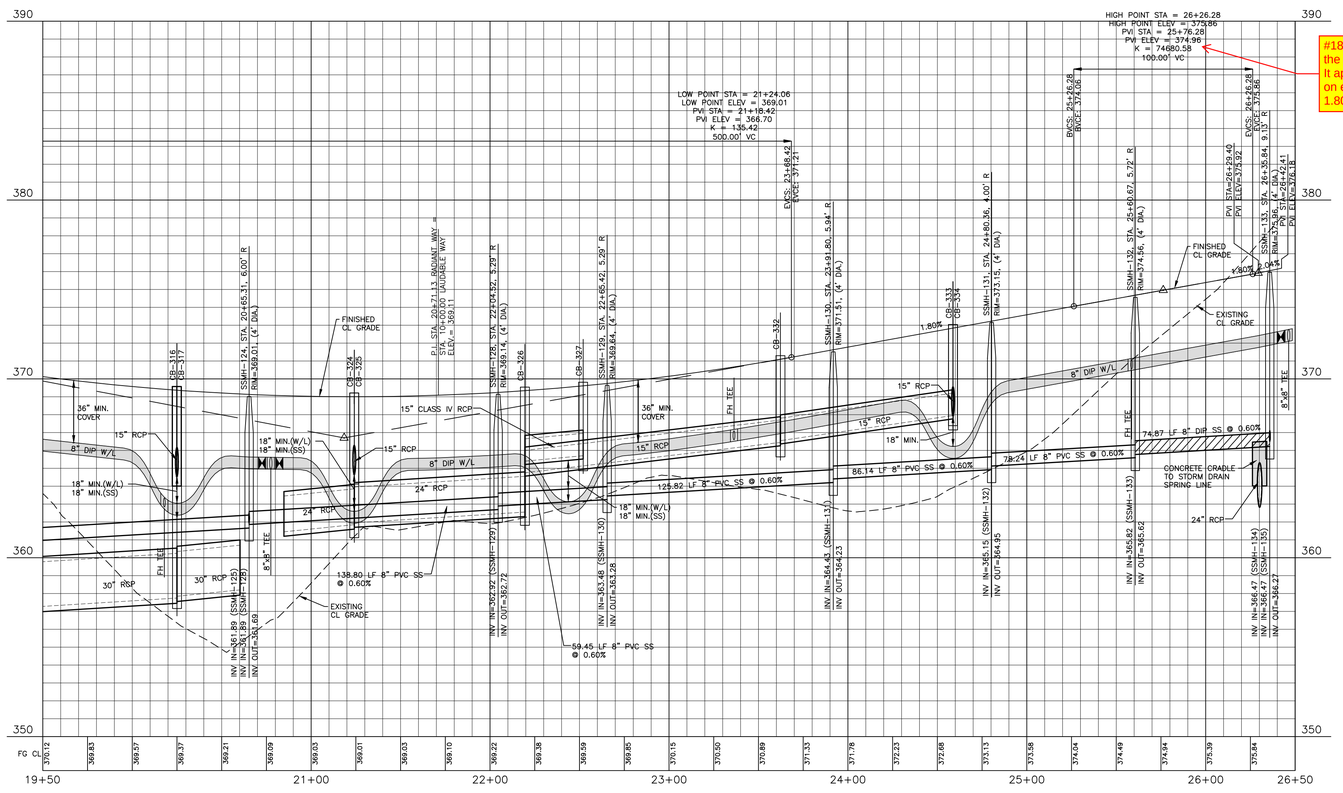

#18 - Please confirm the need for a curve. It appears the grades on each side are both 1.80%

SITE PERMITTING APPROVAL

Water and Sewer Permits (If applicable)

The City of Raleigh consents to the connection and extension of the City's Public Sewer System as shown on this plan. The material and Construction methods used for this project shall conform to the standards and specifications of the City's Public Utilities Handbook. City of Raleigh Public Utilities Department Permit # _____

The City of Raleigh consents to the connection and extension of the City's Public Water System as shown on this plan. The material and Construction methods used for this project shall conform to the standards and specifications of the City's Public Utilities Handbook. City of Raleigh Public Utilities Department Permit # _____

The City of Raleigh consents to the connection to its public sewer system and extension of the private sewer collection system as shown on this plan. The material and constructions methods used for this project shall conform to the standards and specifications of the City's Public Utilities Handbook.
City of Raleigh Public Utilities Department Permit # _____

FINAL DRAWING - NOT RELEASED FOR CONSTRUCTION

MCADAMS

The John R. McAdams Company, Inc.
2905 Meridian Parkway
Durham, NC 27713

phone 919. 361. 5000
fax 919. 361. 2269
license number: C-0293, C-187

www.mcadamsco.com

CLIENT
ASHTON RALEIGH RESIDENTIAL, LLC.
5711 SIX FORKS ROAD, SUITE 300
RALEIGH, NORTH CAROLINA 27609
PHONE: 919. 232. 3695
CONTACT: BOB MISHLER
ASHTON WOODS

REVISIONS
NO. DATE

NORTH CAROLINA PROFESSIONAL SEAL 22630 ENGINEER WILLIAM T. O'DANIEL
NOT FOR CONSTRUCTION

THE POINT PHASES 11-13

CONSTRUCTION DRAWINGS

TOWN OF ROLESVILLE, WAKE FOREST TOWNSHIP,
WAKE COUNTY, NORTH CAROLINA

PLAN INFORMATION

PROJECT NO.	AWH-20000
FILENAME	AWH20000-NORTH-P1
CHECKED BY	.
DRAWN BY	.
SCALE	1"=40'/1"=4'
DATE	10. 27. 2022

PLAN AND PROFILE
RADIANT WAY, STA. 19+50 THRU STA. 26+50

C5.05

M:\Projects\AWH\AWH-20000\04-Production\Engineering\The Point North\Current Drawings\AWH20000-North-P1.dwg, 10/27/2022 9:19:44 AM, Williams, 1:1

M:\Projects\AWH\AWH-20000\04-Production\Engineering\The Point North\Current Drawings\AWH20000-North-P1.dwg, 10/27/2022 9:19:58 AM, Sherrill Williams

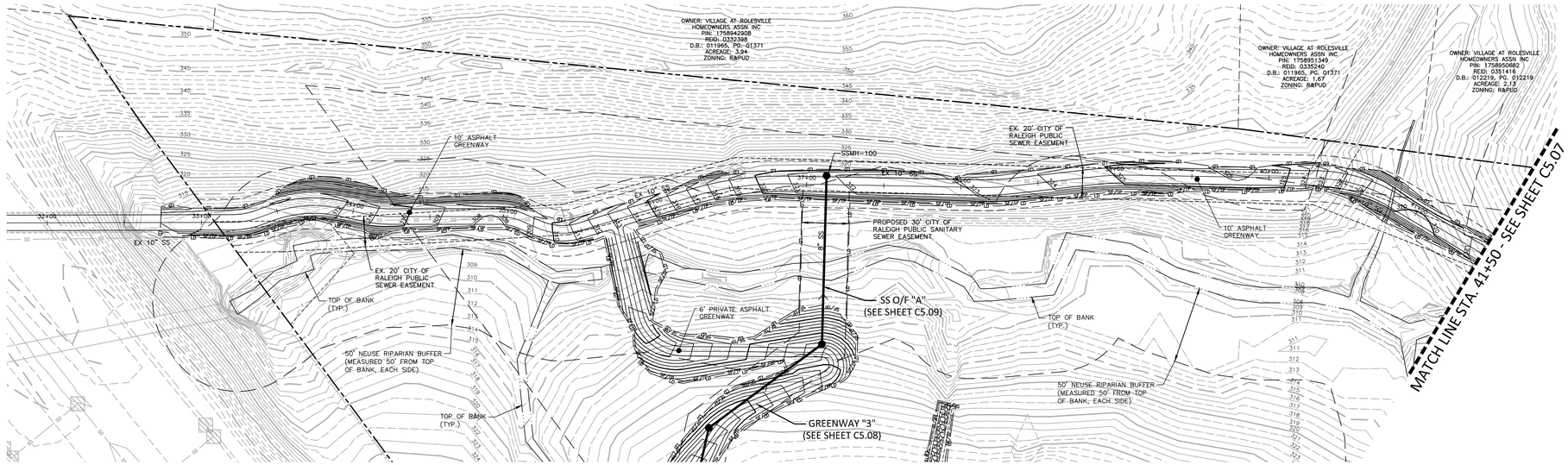

(D6) PRIVATE STORM DRAINAGE EASEMENT TO BE MAINTAINED BY THE HOA

GRAPHIC SCALE
0 20 40 80
1 inch = 40 ft.

GREENWAY "2"

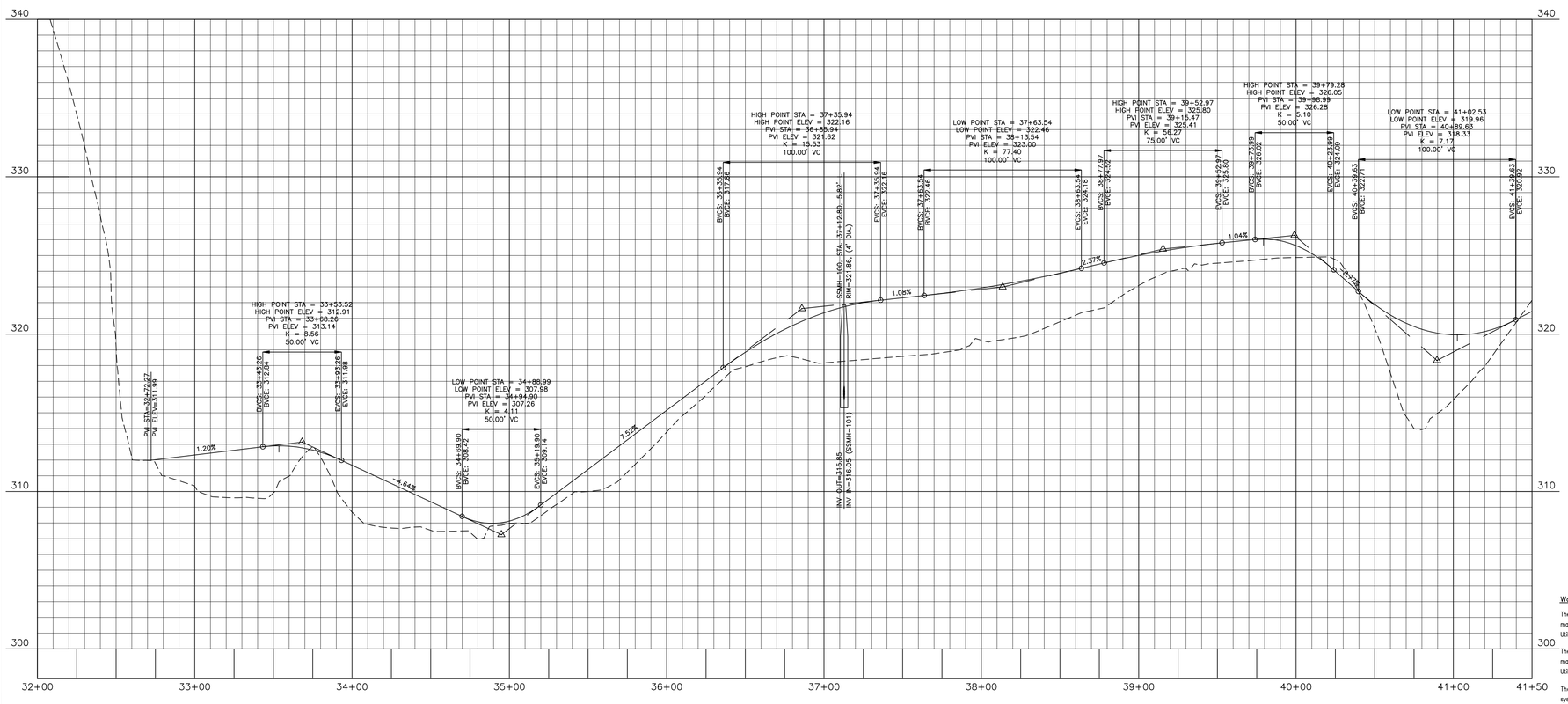

SITE PERMITTING APPROVAL

Water and Sewer Permits (If applicable)

The City of Raleigh consents to the connection and extension of the City's Public Sewer System as shown on this plan. The material and Construction methods used for this project shall conform to the standards and specifications of the City's Public Utilities Handbook. City of Raleigh Public Utilities Department Permit # _____

The City of Raleigh consents to the connection and extension of the City's Public Water System as shown on this plan. The material and Construction methods used for this project shall conform to the standards and specifications of the City's Public Utilities Handbook. City of Raleigh Public Utilities Department Permit # _____

The City of Raleigh consents to the connection to its public sewer system and extension of the private sewer collection system as shown on this plan. The material and constructions methods used for this project shall conform to the standards and specifications of the City's Public Utilities Handbook.
City of Raleigh Public Utilities Department Permit # _____

FINAL DRAWING - NOT RELEASED FOR CONSTRUCTION

MCADAMS

The John R. McAdams Company, Inc.
2905 Meridian Parkway
Durham, NC 27713

phone 919. 361. 5000
fax 919. 361. 2269
license number: C-0293, C-187

www.mcadamsco.com

CLIENT
ASHTON RALEIGH RESIDENTIAL, LLC.
5711 SIX FORKS ROAD, SUITE 300
RALEIGH, NORTH CAROLINA 27609
PHONE: 919. 232. 3695
CONTACT: BOB MISHLER

ASHTON WOODS

REVISIONS
NO. DATE

NORTH CAROLINA PROFESSIONAL SEAL 22630 ENGINEER WILLIAM T. O'DANIEL
NOT FOR CONSTRUCTION

THE POINT PHASES 11-13
CONSTRUCTION DRAWINGS
TOWN OF ROLESVILLE, WAKE FOREST TOWNSHIP,
WAKE COUNTY, NORTH CAROLINA

PLAN INFORMATION

PROJECT NO.	AWH-20000
FILENAME	AWH20000-NORTH-P2
CHECKED BY	.
DRAWN BY	.
SCALE	1"=40'/1"=4'
DATE	10. 27. 2022

PLAN AND PROFILE
GREENWAY "2", STA. 32+00 THRU STA. 41+50

C5.06

M:\Projects\AWH\AWH-20000\04-Production\Engineering\The Point North\Current Drawings\AWH20000-North-P2.dwg, 10/27/2022 9:28:16 AM, Williams, 1:1

M:\Projects\AWH\AWH-20000\04-Production\Engineering\The Point North\Current Drawings\AWH20000-North-P2.dwg, 10/27/2022 9:28:28 AM, Sherrill Williams

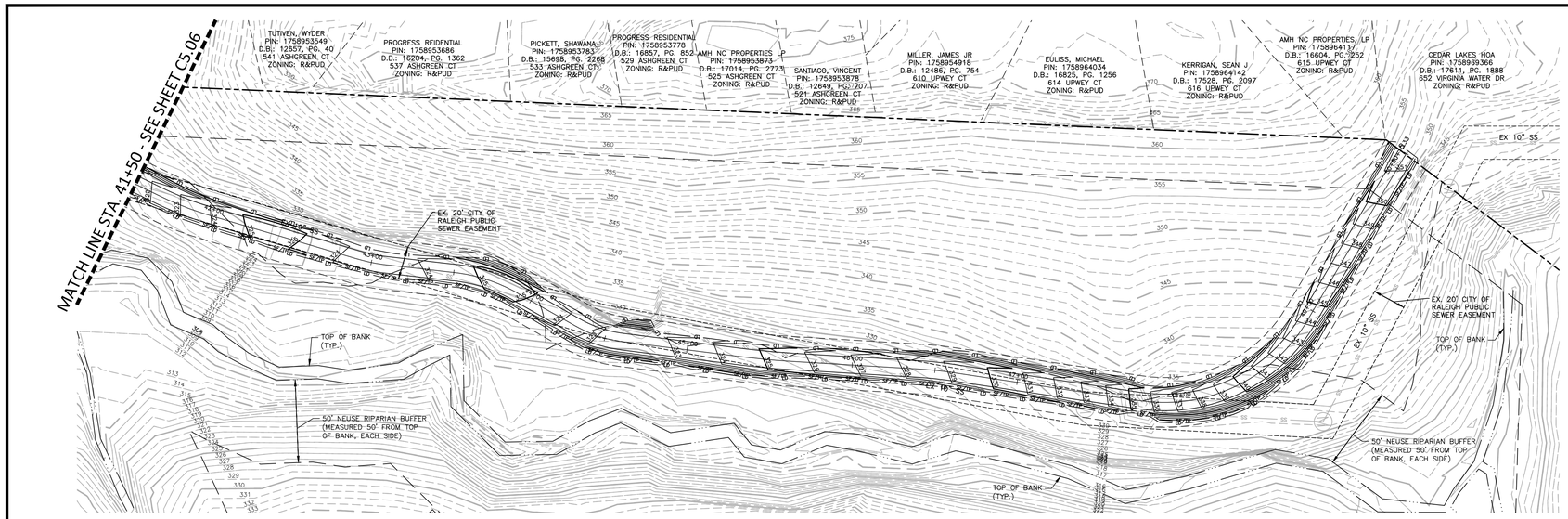

(DE) PRIVATE STORM DRAINAGE EASEMENT TO BE MAINTAINED BY THE HOA

GREENWAY "2"

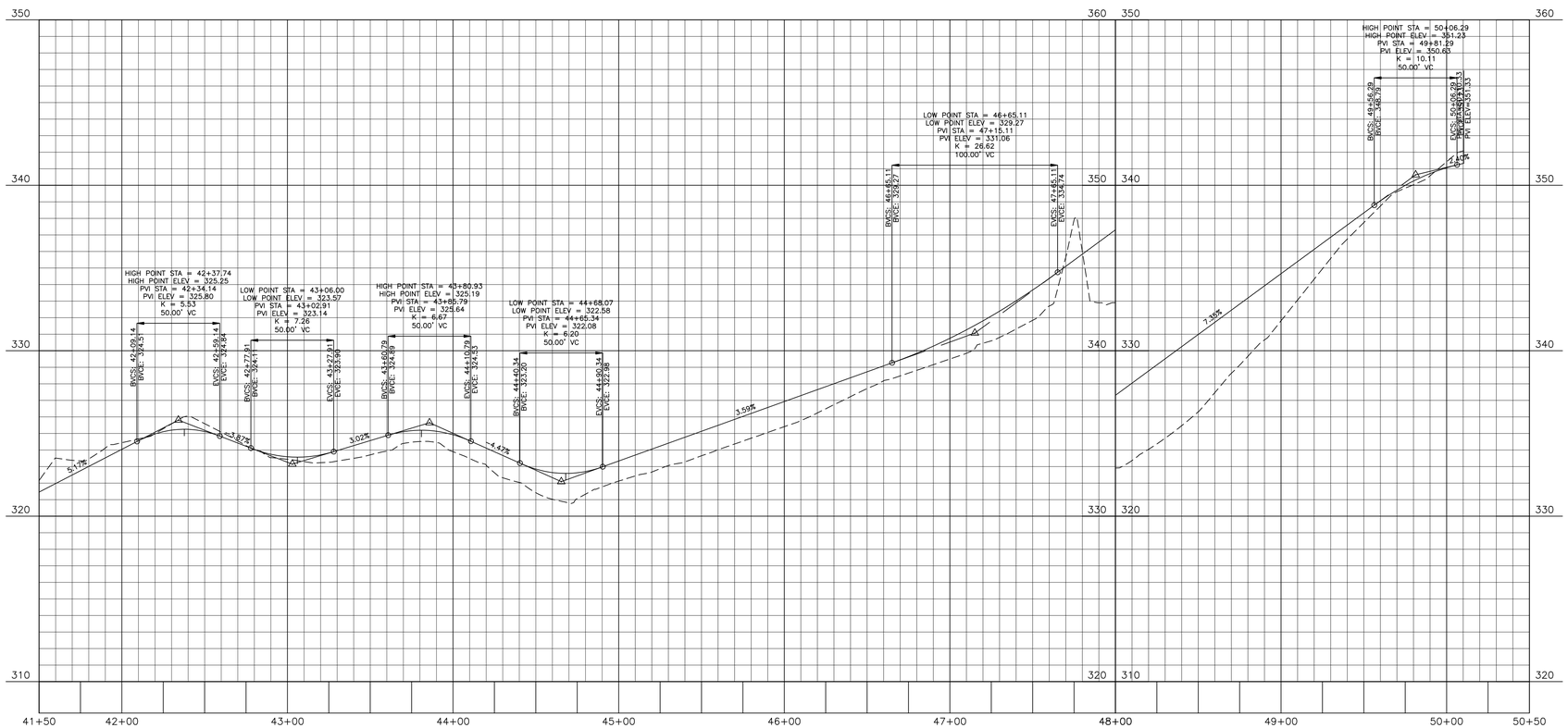

SITE PERMITTING APPROVAL

Water and Sewer Permits (If applicable)

The City of Raleigh consents to the connection and extension of the City's Public Sewer System as shown on this plan. The material and Construction methods used for this project shall conform to the standards and specifications of the City's Public Utilities Handbook. City of Raleigh Public Utilities Department Permit # _____

The City of Raleigh consents to the connection and extension of the City's Public Water System as shown on this plan. The material and Construction methods used for this project shall conform to the standards and specifications of the City's Public Utilities Handbook. City of Raleigh Public Utilities Department Permit # _____

The City of Raleigh consents to the connection to its public sewer system and extension of the private sewer collection system as shown on this plan. The material and constructions methods used for this project shall conform to the standards and specifications of the City's Public Utilities Handbook.
City of Raleigh Public Utilities Department Permit # _____

FINAL DRAWING - NOT RELEASED FOR CONSTRUCTION

The John R. McAdams Company, Inc.
2905 Meridian Parkway
Durham, NC 27713

phone 919. 361. 5000
fax 919. 361. 2269
license number: C-0293, C-187

www.mcadamsco.com

CLIENT
ASHTON RALEIGH RESIDENTIAL, LLC.
5711 SIX FORKS ROAD, SUITE 300
RALEIGH, NORTH CAROLINA 27609
PHONE: 919. 232. 3695
CONTACT: BOB MISHLER
ASHTON WOODS

REVISIONS
NO. DATE

NORTH CAROLINA PROFESSIONAL SEAL 22630 ENGINEER WILLIAM T. O'DANIEL
NOT FOR CONSTRUCTION

THE POINT PHASES 11-13

CONSTRUCTION DRAWINGS

TOWN OF ROLESVILLE, WAKE FOREST TOWNSHIP,
WAKE COUNTY, NORTH CAROLINA

PLAN INFORMATION

PROJECT NO.	AWH-20000
FILENAME	AWH20000-NORTH-P2
CHECKED BY	.
DRAWN BY	.
SCALE	1"=40'/1"=4'
DATE	10. 27. 2022

PLAN AND PROFILE
GREENWAY "2", STA. 41+50 THRU STA. 50+50

C5.07

M:\Projects\AWH\AWH-20000\04-Production\Engineering\The Point North\Current Drawings\AWH20000-North-P2.dwg, 10/27/2022 9:28:42 AM, Williams, 1:1

M:\Projects\AWH\AWH-20000\04-Production\Engineering\The Point North\Current Drawings\AWH20000-North-P2.dwg, 10/27/2022 9:28:55 AM, Sherrill Williams

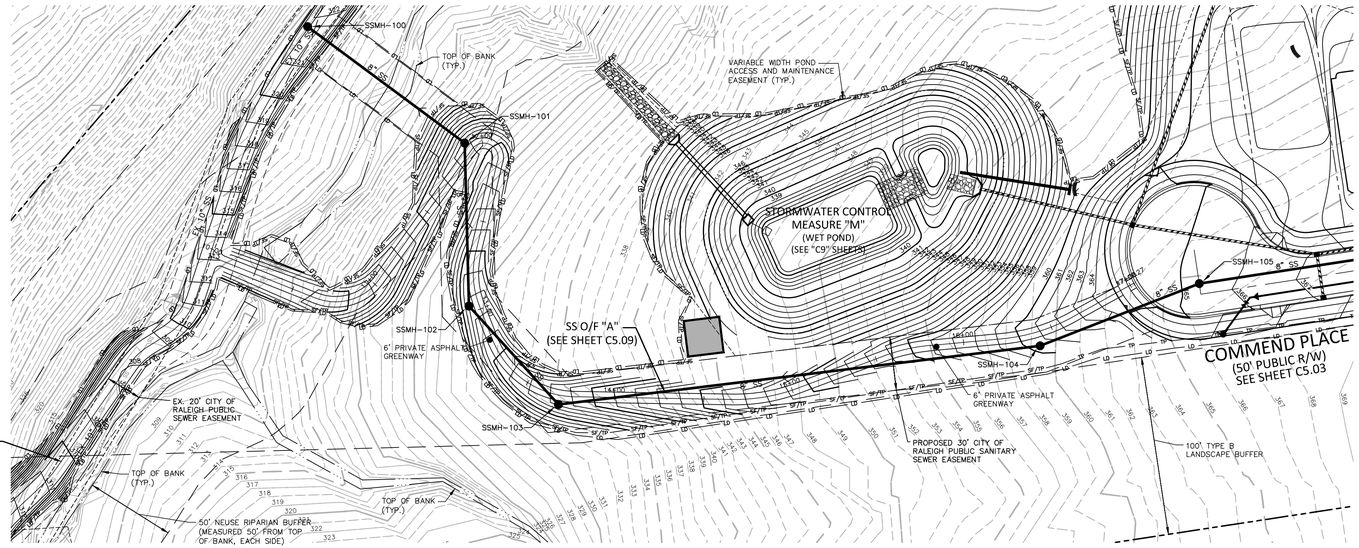

PRIVATE STORM DRAINAGE EASEMENT TO BE MAINTAINED BY THE HOA

GRAPHIC SCALE
0 20 40 80
1 inch = 40 ft.

GREENWAY "3"

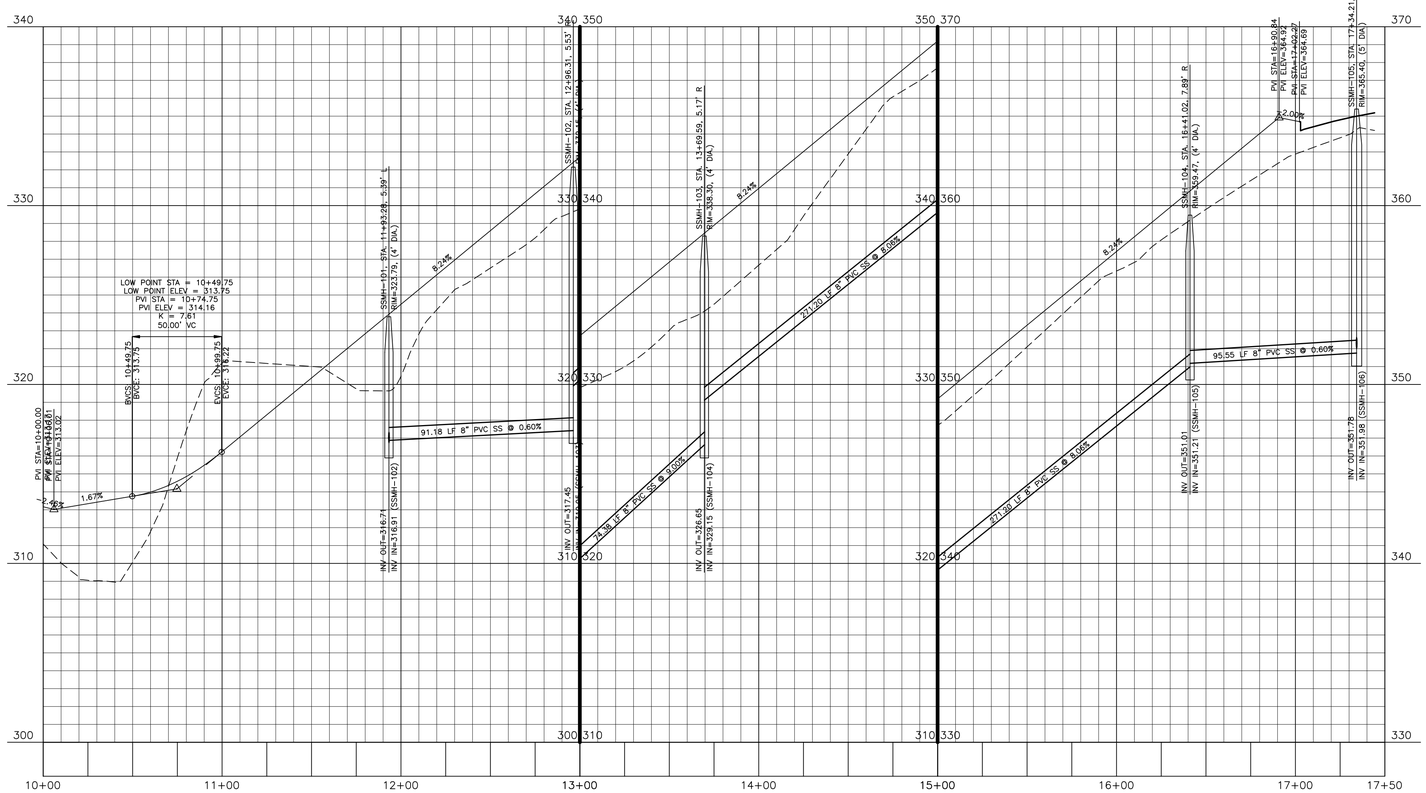

SITE PERMITTING APPROVAL

Water and Sewer Permits (If applicable)

The City of Raleigh consents to the connection and extension of the City's Public Sewer System as shown on this plan. The material and Construction methods used for this project shall conform to the standards and specifications of the City's Public Utilities Handbook. City of Raleigh Public Utilities Department Permit # _____

The City of Raleigh consents to the connection and extension of the City's Public Water System as shown on this plan. The material and Construction methods used for this project shall conform to the standards and specifications of the City's Public Utilities Handbook. City of Raleigh Public Utilities Department Permit # _____

The City of Raleigh consents to the connection to its public sewer system and extension of the private sewer collection system as shown on this plan. The material and constructions methods used for this project shall conform to the standards and specifications of the City's Public Utilities Handbook.
City of Raleigh Public Utilities Department Permit # _____

FINAL DRAWING - NOT RELEASED FOR CONSTRUCTION

MCADAMS

The John R. McAdams Company, Inc.
2905 Meridian Parkway
Durham, NC 27713

phone 919. 361. 5000
fax 919. 361. 2269
license number: C-0293, C-187

www.mcadamsco.com

CLIENT
ASHTON RALEIGH RESIDENTIAL, LLC.
5711 SIX FORKS ROAD, SUITE 300
RALEIGH, NORTH CAROLINA 27609
PHONE: 919. 232. 3695
CONTACT: BOB MISHLER
ASHTON WOODS

REVISIONS
NO. DATE

NORTH CAROLINA PROFESSIONAL SEAL 22630 ENGINEER WILLIAM T. O'DANIEL
FOR REVIEW NOT FOR CONSTRUCTION

THE POINT PHASES 11-13

CONSTRUCTION DRAWINGS

TOWN OF ROLESVILLE, WAKE FOREST TOWNSHIP,
WAKE COUNTY, NORTH CAROLINA

PLAN INFORMATION

PROJECT NO.	AWH-20000
FILENAME	AWH20000-NORTH-P2
CHECKED BY	.
DRAWN BY	.
SCALE	1"=40'/1"=4'
DATE	10. 27. 2022

PLAN AND PROFILE
GREENWAY "3", STA. 10+00 THRU STA. 17+50

C5.08

M:\Projects\AWH\AWH-20000\04-Production\Engineering\The Point North\Current Drawings\AWH20000-North-P2.dwg, 10/27/2022 9:29:08 AM, Williams, 1:1
M:\Projects\AWH\AWH-20000\04-Production\Engineering\The Point North\Current Drawings\AWH20000-North-P2.dwg, 10/27/2022 9:29:20 AM, Sherrill Williams

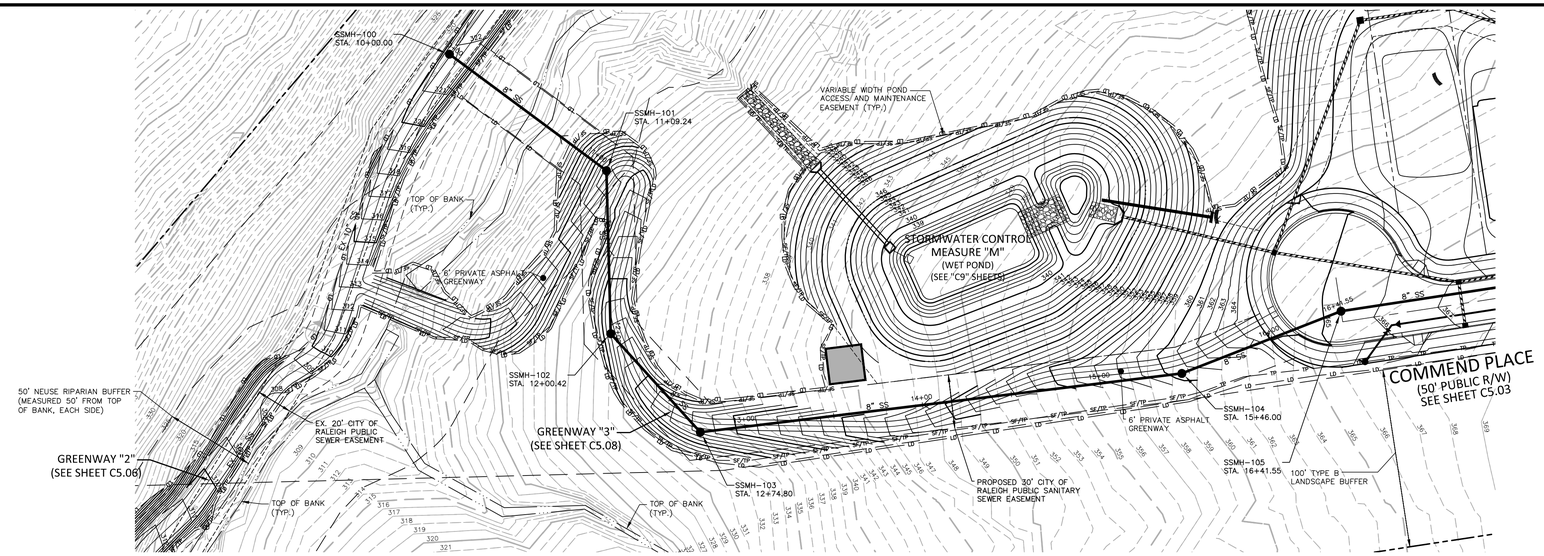

(PE) PRIVATE STORM DRAINAGE EASEMENT TO BE MAINTAINED BY THE HOA

GRAPHIC SCALE
0 20 40 80
1 inch = 40 ft.

SANITARY SEWER OUTFALL "A"

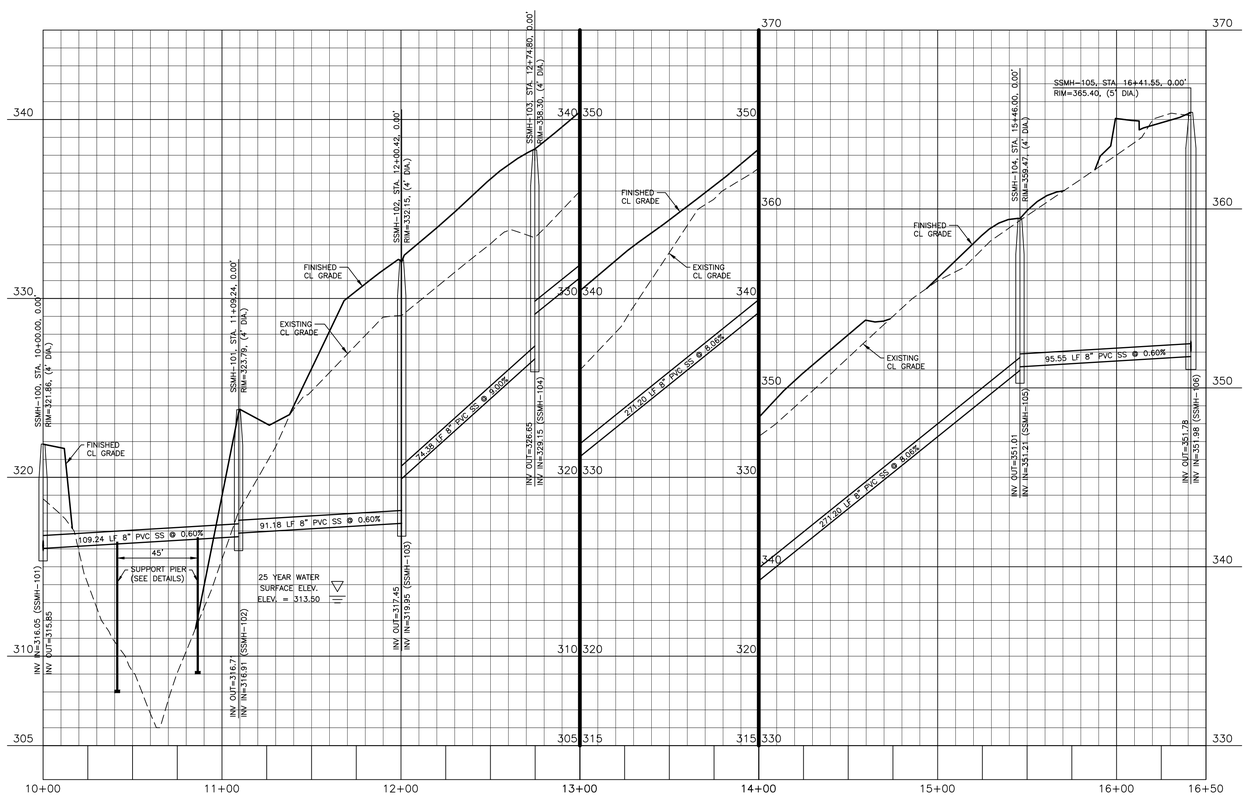

SITE PERMITTING APPROVAL

Water and Sewer Permits (If applicable)

The City of Raleigh consents to the connection and extension of the City's Public Sewer System as shown on this plan. The material and Construction methods used for this project shall conform to the standards and specifications of the City's Public Utilities Handbook. City of Raleigh Public Utilities Department Permit # _____

The City of Raleigh consents to the connection and extension of the City's Public Water System as shown on this plan. The material and Construction methods used for this project shall conform to the standards and specifications of the City's Public Utilities Handbook. City of Raleigh Public Utilities Department Permit # _____

The City of Raleigh consents to the connection to its public sewer system and extension of the private sewer collection system as shown on this plan. The material and constructions methods used for this project shall conform to the standards and specifications of the City's Public Utilities Handbook.
City of Raleigh Public Utilities Department Permit # _____

FINAL DRAWING - NOT RELEASED FOR CONSTRUCTION

MCADAMS

The John R. McAdams Company, Inc.
2905 Meridian Parkway
Durham, NC 27713

phone 919. 361. 5000
fax 919. 361. 2269
license number: C-0293, C-187

www.mcadamsco.com

CLIENT
ASHTON RALEIGH RESIDENTIAL, LLC.
5711 SIX FORKS ROAD, SUITE 300
RALEIGH, NORTH CAROLINA 27609
PHONE: 919. 232. 3695
CONTACT: BOB MISHLER
ASHTON WOODS

REVISIONS
NO. DATE

NORTH CAROLINA PROFESSIONAL SEAL 22630 ENGINEER WILLIAM T. O'DANIEL
FOR REVIEW NOT FOR CONSTRUCTION

THE POINT PHASES 11-13
CONSTRUCTION DRAWINGS
TOWN OF ROLESVILLE, WAKE FOREST TOWNSHIP,
WAKE COUNTY, NORTH CAROLINA

PLAN INFORMATION

PROJECT NO.	AWH-20000
FILENAME	AWH20000-NORTH-P2
CHECKED BY	.
DRAWN BY	.
SCALE	1"=40'/1"=4'
DATE	10. 27. 2022

PLAN AND PROFILE
SS O/F "A", STA. 10+00 THRU STA. 16+50

C5.09

M:\Projects\AWH\AWH-20000\04-Production\Engineering\The Point North\Current Drawings\AWH20000-North-P2.dwg, 10/27/2022 9:29:33 AM, Williams, 1:1
M:\Projects\AWH\AWH-20000\04-Production\Engineering\The Point North\Current Drawings\AWH20000-North-P2.dwg, 10/27/2022 9:29:46 AM, Sherrill Williams

EROSION CONTROL NOTES

1. ALL CONSTRUCTION SHALL CONFORM TO THE LATEST TOWN OF ROLESVILLE AND WAKE COUNTY STANDARDS, SPECIFICATIONS AND DETAILS.
2. GRADING AND EROSION CONTROL METHODS SHALL ADHERE TO THE WAKE COUNTY SOIL AND EROSION CONTROL STANDARDS AND SPECIFICATIONS.
3. GRADING AND EROSION CONTROL METHODS SHALL ADHERE TO THE NORTH CAROLINA DEPARTMENT OF NATURAL RESOURCES DIVISION OF WATER QUALITY (DWQ) STANDARDS AND SPECIFICATIONS. WHERE DIFFERENT FROM WAKE COUNTY STANDARDS, THE MORE STRINGENT METHOD SHALL BE APPLIED.
4. FAILURE TO FOLLOW THE APPROVED PLAN SEQUENCE AND DETAILS COULD SUBJECT THE CONTRACTOR TO FINES AND PENALTIES ISSUED BY EITHER THE COUNTY EROSION CONTROL DEPARTMENT OR THE DWQ.
5. CONTRACTOR SHALL SEED AND STABILIZE ALL STEEP SLOPES (GREATER THAN 2H:1V) WITHIN 7 DAYS, 10 DAYS FOR MODERATE SLOPES (3H:1V OR GREATER) AND WITHIN 14 CALENDAR DAYS EVERYWHERE ELSE (STATE LAW 2009-486).
6. FOR ANY LAND-DISTURBING ACTIVITY WHERE GRADING ACTIVITIES HAVE BEEN COMPLETED, TEMPORARY OR PERMANENT GROUND COVER SUFFICIENT TO RESTRAIN EROSION SHALL BE PROVIDED AS SOON AS PRACTICAL, BUT IN NO CASE LATER THAN SEVEN (7) DAYS AFTER COMPLETING THE WORK. STABILIZATION IS THE BEST FORM OF EROSION CONTROL. TEMPORARY SEEDING IS NECESSARY TO ACHIEVE EROSION CONTROL ON LARGE DENUDED AREAS AND ESPECIALLY WHEN SPECIFICALLY REQUIRED AS PART OF THE CONSTRUCTION SEQUENCE ON THE PLAN.
7. NO DEBRIS SHALL BE TRACKED ONTO PUBLIC RIGHT OF WAY. IF THE SITUATION OCCURS WHERE MUD, ROCK AND DEBRIS IS TRACKED ONTO PAVEMENT, THE CONTRACTOR SHALL CLEAN THE PAVEMENT AND INSTALL ADDITIONAL MEASURES TO PREVENT THE FUTURE OCCURRENCE.
8. THE EROSION CONTROL INSPECTOR MAY REQUIRE ADDITIONAL FIELD MEASURES AS NECESSARY TO PROVIDE ADEQUATE PROTECTION FROM RECEIVING WATER COURSES.
9. EROSION AND SEDIMENT CONTROL DEVICES MUST BE INSTALLED AND INSPECTED PRIOR TO ANY GRADING ON SITE. THE CONTRACTOR SHALL CALL FOR AN INSPECTION BY WAKE COUNTY SEDIMENTATION AND EROSION CONTROL (SEC) ONCE INITIAL MEASURES ARE IN PLACE. (SEE CONSTRUCTION SEQUENCE)
10. CONTRACTOR SHALL INSPECT ALL SEDIMENT /EROSION CONTROL DEVICES AFTER EACH STORM EVENT. EACH DEVICE IS TO BE MAINTAINED OR REPLACED IF SEDIMENT ACCUMULATION HAS REACHED ONE HALF THE CAPACITY OF THE DEVICE.
11. A COPY OF THE APPROVED EROSION CONTROL PLAN MUST BE ON FILE AT THE JOB SITE AT ALL TIMES.
12. CONSTRUCTION, MAINTENANCE, AND REMOVAL OF ALL EROSION CONTROL DEVICES ARE THE RESPONSIBILITY OF THE GRADING CONTRACTOR UNLESS OTHERWISE NOTED.
13. ANY GRADING BEYOND THE DENUDED LIMITS SHOWN ON THE PLAN IS A VIOLATION OF THE CITY/COUNTY EROSION CONTROL ORDINANCE AND IS SUBJECT TO A FINE.
14. ADDITIONAL MEASURES TO CONTROL EROSION AND SEDIMENT MAY BE REQUIRED BY A REPRESENTATIVE OF THE CITY/COUNTY ENGINEERING DEPARTMENT AND ARE THE RESPONSIBILITY OF THE CONTRACTOR.
15. PROTECTION OF EXISTING VEGETATION: AT THE START OF GRADING INVOLVING THE STRIPPING OF TOPSOIL OR LOWERING OF EXISTING GRADE AROUND A TREE, A CLEAN, SHARP, VERTICAL CUT SHALL BE MADE AT THE EDGE OF THE TREE SAVE AREA AT THE SAME TIME AS OTHER EROSION CONTROL MEASURES ARE INSTALLED. THE TREE PROTECTION FENCING SHALL BE INSTALLED ON THE SIDE OF THE CUT FARTHEST AWAY FROM THE TREE TRUNK AND SHALL REMAIN IN PLACE UNTIL ALL CONSTRUCTION IN THE VICINITY OF THE TREES IS COMPLETE. NO STORAGE OF MATERIALS, FILL, OR EQUIPMENT AND NO TRESPASSING SHALL BE ALLOWED WITHIN THE BOUNDARY OF THE PROTECTED AREA AND SHALL BE POSTED ON THE PROTECTION FENCE. A PROTECTION FENCE CONSTRUCTED OF MATERIAL RESISTANT TO DEGRADATION BY SUN, WIND, AND MOISTURE FOR THE DURATION OF THE CONSTRUCTION, SHALL BE INSTALLED AT THE SAME TIME AS THE EROSION CONTROL MEASURES AND SHALL BE IN PLACE UNTIL ALL CONSTRUCTION IN THE VICINITY OF THE TREES IS COMPLETE.
16. A CONSTRUCTION SEQUENCE HAS BEEN PROVIDED. INSTALLATION OF ALL PROPOSED SEDIMENTATION & EROSION CONTROL MEASURES IN THE SEQUENCE(S) PROVIDED AND MAINTENANCE OF THOSE DEVICES IS REQUIRED. THE CONTRACTOR MAY BE ALLOWED, WITH PRIOR APPROVAL FROM THE OWNER, TO COORDINATE CHANGES TO THE PLAN WITH THE ON-SITE SEDIMENTATION & EROSION CONTROL INSPECTOR AND THE ENGINEER.
17. PROVIDE INLET PROTECTION AROUND ALL SITE STORM INLETS. PROTECT OPEN PIPES UNDER CONSTRUCTION WITH EITHER PLYWOOD OR WITH MESH AND GRAVEL WEIRS. RUNOFF SHALL NOT BE ALLOWED IN ANY OPEN TRENCH.
18. CONTRACTOR WILL FIELD LOCATE SILT FENCE OUTLETS AT LOW POINTS IN SILT FENCE AS REQUIRED TO PROVIDE RELIEF FROM CONCENTRATED FLOWS.
19. TEMPORARY DIVERSIONS SHALL BE MAINTAINED DAILY BY CONTRACTOR SO THAT THEY ARE FUNCTIONAL AT THE END OF EACH WORKDAY AND WHEN STOPPING WORK FOR RAIN.
20. ALL DIMENSIONS AND GRADES SHOWN ON THE PLANS SHALL BE FIELD VERIFIED BY THE CONTRACTOR PRIOR TO CONSTRUCTION. CONTRACTOR SHALL NOTIFY THE OWNER IF ANY DISCREPANCIES EXIST PRIOR TO PROCEEDING WITH CONSTRUCTION FOR NECESSARY PLAN OR GRADE CHANGES. NO EXTRA COMPENSATION SHALL BE PAID TO THE CONTRACTOR FOR ANY WORK DONE DUE TO DIMENSIONS OR GRADES SHOWN INCORRECTLY ON THESE PLANS IF SUCH NOTIFICATION HAS NOT BEEN GIVEN.
21. DISTURBANCE OUTSIDE OF THE SITE PROPERTY LIMITS OR PUBLIC RIGHT-OF-WAY SHALL ONLY BE AS ALLOWED BY SIGNED GRADING AGREEMENTS AND/OR EASEMENTS BETWEEN THE DEVELOPER AND THE OFFSITE PROPERTY OWNER.
22. THE CONTRACTOR IS RESPONSIBLE TO MAINTAIN SAFE OPEN ACCESS TO ALL PROPERTIES ALONG ADJACENT PROPERTIES DURING CONSTRUCTION PERIOD FOR IMPROVEMENTS.
23. STORM DRAINAGE STRUCTURE LOCATIONS AND PIPE SIZES SUBJECT TO FINAL CONSTRUCTION DRAWING APPROVAL.

CONSTRUCTION SEQUENCE - STAGE 1:

1. OBTAIN GRADING PERMIT FROM THE WAKE COUNTY ENVIRONMENTAL SERVICES DEPARTMENT.
2. CALL ENVIRONMENTAL CONSULTANT JEEVAN NEUPANE, PE (919-819-8907) TO SCHEDULE A PRE-CONSTRUCTION MEETING. NOTIFY OWNER AND ENGINEER WHEN PRECON IS SCHEDULED SO THEY MAY ALSO ATTEND.
3. CONTRACTOR WILL BE REQUIRED TO SUBMIT SITE NPDES STORMWATER PERMIT FOR CONSTRUCTION ACTIVITY (NCG010000) TO WAKE COUNTY INSPECTIONS THROUGHOUT THE PROJECT.
4. INSTALL THE FOLLOWING EROSION AND SEDIMENTATION CONTROL DEVICES PER THE APPROVED PLAN IN THE FOLLOWING ORDER:
   a. GRAVEL CONSTRUCTION ENTRANCES AND TEMPORARY ACCESS ROADS.
   b. INSTALL TEMPORARY "CLEAN WATER" DIVERSION DITCHES AS SHOWN ON SHEET C6.01A.
   c. TREE PROTECTION FENCE
   d. SILT FENCING SURROUNDING SITE WITH SILT FENCE OUTLETS.
   e. INLET PROTECTION FOR EXISTING INLETS WITHIN ROADWAYS.
   f. SKIMMER BASINS WITH POROUS BAFFLES AND OUTLET PROTECTION.
   g. TEMPORARY DIVERSION DITCHES WITH SPECIFIED LINERS.
5. CLEAR ONLY AS NECESSARY TO INSTALL THESE DEVICES.
6. CLEAR AND GRUB AREA FOR FUTURE CONSTRUCTION. CONTRACTOR TO COORDINATE WITH DEVELOPER TO OBTAIN NECESSARY OFFSITE EASEMENTS.
7. WHEN STAGE 1 CONSTRUCTION IS COMPLETE, CALL WAKE COUNTY ENVIRONMENTAL SERVICES FOR INSPECTION. PROCEED TO STAGE 2.
8. MAINTAIN DEVICES AS NEEDED IN ACCORDANCE WITH THE NOTES ON THIS SHEET.
9. ALL DISTURBED AREAS MUST BE STABILIZED WITHIN 14 DAYS OF INACTIVITY.
10. CONTRACTOR SHALL INSPECT AND REPAIR ALL EROSION CONTROL DEVICES ONCE PER WEEK AND AFTER EVERY RAINFALL EVENT. GRADING ACTIVITY SHALL BE PROHIBITED IN THE AREAS OF THE SEDIMENT CONTROL DEVICES UNTIL THE AREAS UPSTREAM OF THESE DEVICES HAVE BEEN STABILIZED AND APPROVED.

CONSTRUCTION SEQUENCE - STAGE 2:

1. BEGIN MASS GRADING OF SITE. AS AREAS ARE BROUGHT UP TO PROPOSED GRADE, STABILIZE SITE WITH VEGETATION. ADJUST DIVERSION DITCHES AS NECESSARY TO MAINTAIN FLOW TO SKIMMER BASINS.
2. CONTRACTOR TO MAINTAIN POSITIVE DRAINAGE IN DIVERSION DITCHES AND TO SEDIMENT BASINS AT ALL TIMES THROUGHOUT CONSTRUCTION.
3. SUBMIT DOCUMENTATION REQUIRED UNDER THE SITE NPDES STORMWATER PERMIT FOR CONSTRUCTION ACTIVITY (NCG010000) TO WAKE COUNTY THROUGHOUT THE PROJECT.
4. ALL OFF-SITE STREETS SHALL BE KEPT CLEAN AS NOTED IN EROSION CONTROL NOTES DURING HAUL OFF OF EXCAVATED MATERIAL.
5. ALL DISTURBED AREAS MUST BE STABILIZED WITHIN 14 DAYS OF INACTIVITY.
6. PRIOR TO THE REMOVAL, REDUCTION OR CONVERSION OF ANY SEDIMENT BASIN, THE CONTRACTOR IS TO CONTACT THE WAKE COUNTY ENVIRONMENTAL CONSULTANT JEEVAN NEUPANE, PE (919-819-8907).

EROSION CONTROL MAINTENANCE PLAN

1. ALL EROSION AND SEDIMENT CONTROL MEASURES SHALL BE CHECKED BY THE SITE CONTRACTOR FOR STABILITY AND OPERATION FOLLOWING EVERY RUNOFF-PRODUCING RAINFALL BUT IN NO CASE LESS THAN ONCE EVERY WEEK. ANY NEEDED REPAIRS SHALL BE MADE IMMEDIATELY TO MAINTAIN ALL MEASURES AS DESIGNED.
2. THE SEDIMENT BASINS SHALL BE INSPECTED REGULARLY DURING LAND DISTURBING ACTIVITIES AND AFTER EACH RUNOFF-PRODUCING RAINFALL. SEDIMENT SHALL BE REMOVED AND THE BASIN RESTORED TO ITS ORIGINAL DIMENSIONS WHEN SEDIMENT HAS ACCUMULATED TO ONE-HALF THE DESIGN DEPTH OF EACH BASIN. PORTIONS OF THE BASIN'S GRAVEL FACING THAT ARE CONTAMINATED BY SEDIMENT SHALL BE REPLACED WITH FRESH GRAVEL DURING EACH SEDIMENT REMOVAL EPISODE.
3. SEDIMENT FENCES SHALL BE INSPECTED AT LEAST ONCE A WEEK AND AFTER EACH RAINFALL. REPAIRS SHALL BE MADE IMMEDIATELY. SEDIMENT DEPOSITS SHALL BE REMOVED AS NEEDED TO PROVIDE ADEQUATE STORAGE VOLUME FOR THE NEXT RAINFALL EVENT, AND TO REDUCE PRESSURE ON THE FENCE. FENCING MATERIALS AND SEDIMENT DEPOSITS SHALL BE REMOVED, AND THE AREA BROUGHT TO GRADE FOLLOWING STABILIZATION OF UPGRADIENT DISTURBED AREAS.
4. DIVERSION DITCHES MUST REMAIN IN PLACE UNTIL PROJECT IS STABILIZED. PERMISSION SHALL BE GIVEN BY THE EROSION CONTROL INSPECTOR FOR REMOVAL UPON COMPLETION OF PERMANENT UPSTREAM STABILIZATION.

STOCKPILE NOTES

DESIGN CRITERIA

A. STOCKPILE FOOTPRINTS SHALL BE SETBACK A MINIMUM OF 25' FROM ADJACENT PROPERTY LINES.

B. STOCKPILE HEIGHT SHALL NOT EXCEED 35 FEET.

C. STOCKPILE SLOPES SHALL BE 2:1 OR FLATTER.

D. OFF-SITE SPOIL OR BORROW AREAS MUST BE IN COMPLIANCE WITH WAKE COUNTY UDO AND STATE REGULATIONS. ALL SPOIL AREAS OVER AN ACRE ARE REQUIRED TO HAVE AN APPROVED SEDIMENT CONTROL PLAN. DEVELOPER/CONTRACTOR SHALL NOTIFY WAKE COUNTY OF ANY OFFSITE DISPOSAL OF SOIL, PRIOR TO DISPOSAL. FILL OF FEMA FLOODWAYS AND NON-ENCROACHMENT AREAS ARE PROHIBITED EXCEPT AS OTHERWISE PROVIDED BY SUBSECTION 14-19-2 OF THE WAKE COUNTY UNIFIED DEVELOPMENT ORDINANCE (CERTIFICATIONS AND PERMITS REQUIRED).

E. SEEDING OR COVERING STOCKPILES WITH TARPS OR MULCH IS REQUIRED AND WILL REDUCE EROSION PROBLEMS. TARPS SHOULD BE KEYED IN AT THE TOP OF THE SLOPE TO KEEP WATER FROM RUNNING UNDERNEATH THE PLASTIC.

F. IF A STOCKPILE IS TO REMAIN FOR FUTURE USE AFTER THE PROJECT IS COMPLETE (BUILDERS, ETC.), THE FINANCIAL RESPONSIBLE PARTY MUST NOTIFY WAKE COUNTY OF A NEW RESPONSIBLE PARTY FOR THAT STOCKPILE.

G. THE USE OF STAGED SEEDING AND MULCHING ON A CONTINUAL BASIS WHILE THE STOCKPILE IS IN USE IS REQUIRED.

H. ESTABLISH AND MAINTAIN A VEGETATIVE BUFFER AT THE TOE OF THE SLOPE (WHERE PRACTICAL).

I. STOCKPILE MUST HAVE SILT FENCE WRAPPED AROUND THE LOW SIDE(S) AND A SILT FENCE OUTLET AT ALL LOW POINTS.

BASIN REMOVAL SEQUENCE

1. SCHEDULE A SITE MEETING WITH THE ENVIRONMENTAL ENGINEER/CONSULTANT TO DETERMINE IF A BASIN CAN BE REMOVED. INSTALL SILT FENCING OR OTHER TEMPORARY EROSION CONTROL MEASURES AS NEEDED PRIOR TO REMOVAL OF THE BASIN.
2. REMOVE BASIN(S) AND ASSOCIATED TEMPORARY DIVERSION DITCHES. IF CULVERT PIPES NEED TO BE EXTENDED, PERFORM THIS OPERATION AT THIS TIME. FINE GRADE AREA IN PREPARATION FOR SEEDING.
3. PERFORM SEEDBED PREPARATION, SEED, MULCH AND ASPHALT TACK ANY RESULTING BARE AREAS IMMEDIATELY.
4. INSTALL VELOCITY DISSIPATORS AND/OR LEVEL SPREADERS AS REQUIRED ON THE EROSION CONTROL PLAN.
5. WHEN SITE IS FULLY STABILIZED, CALL ENVIRONMENTAL ENGINEER/CONSULTANT FOR APPROVAL OF REMOVING REMAINING TEMPORARY EROSION CONTROL MEASURES AND ADVICE ON WHEN SITE CAN BE ISSUED A CERTIFICATE OF COMPLETION.

NOTE: A MEETING SHOULD ALSO BE SCHEDULED WITH THE ENVIRONMENTAL ENGINEER/CONSULTANT TO DETERMINE WHEN A BASIN MAY BE CONVERTED FOR STORMWATER USE. SOME MUNICIPALITIES MAY ALSO REQUIRE THIS.

TEMPORARY DIVERSION DITCH DESIGN TABLE

TEMPORARY DIVERSION ID	TD-1	TD-2	TD-3	TD-4	TD-5	TD-6
MINIMUM DEPTH (FT)	1.45	0.38	1.40	0.81	0.44	0.55
MINIMUM BOTTOM WIDTH (FT)	2.00	0	1.00	0	0	0
CALCULATED VELOCITY	4.35	2.58	3.47	1.64	0.95	6.92
ALLOWABLE VELOCITY	6.00	8.00	6.00	5.0	5.0	10.0
CALCULATED SHEAR STRESS	0.94	1.75	0.87	0.51	0.27	2.16
ALLOWABLE SHEAR STRESS	1.75	2.00	2.00	1.55	1.55	2.25
TEMPORARY LINER SPECIFICATION*	ERONET S150	ERONET S150	ERONET S150	ERONET S75	ERONET S75	ERONET C125

* ALL SPECIFICATIONS ARE NORTH AMERICAN GREEN ROLLMAX PRODUCTS OR EQUAL

SEDIMENT TRAP DESIGN TABLE			
SEDIMENT TRAP ID	SB-M	SB-N	SB-O
Q_{10} (CFS)	28.6 cfs	42.9 cfs	10.4 cfs
Bottom Length	N/A	N/A	N/A
Bottom Width	N/A	N/A	N/A
Sediment Depth	4.0 ft	4.0 ft	4.0 ft
Freeboard (from Sediment Depth)	2.0 ft	2.0 ft	2.0 ft
Depth to Crest of Spillway	4.0 ft	4.0 ft	4.0 ft
Side Slopes1	3.0H:1V	3.0H:1V	3.0H:1V
Spillway Length	16 ft	16 ft	16 ft
Height of Berm	6 ft	6 ft	6 ft
Top of Trap Length	N/A	N/A	N/A
Top of Trap Width	N/A	N/A	N/A
Storage Volume Required	12348 cf	17910 cf	4356 cf
Storage Volume Prov'd.	40460 cf	63880 cf	56600 cf
Sediment Surface Area Req'd	12460 sf	18680 sf	4540 sf
Sediment Surface Area Prov'd	12790 sf	19680 sf	17620 sf
Drainage Area (AC.)	6.86 ac	9.95 ac	2.42 ac
Disturbed Area (AC.)	6.86 ac	9.95 ac	2.42 ac

Trap ID	Drawdown	Skimmer Type(s)
SB-M	3 DAYS	1 – 2.5 inch Skimmers with a(n) 2.25 inch orifice
SB-N	3 DAYS	1 – 2.5 inch Skimmers with a(n) 2.5 inch orifice
SB-O	3 DAYS	1 – 2.0 inch Skimmers with a(n) 1.5 inch orifice

Notes:
1. Side slopes pertain only for the vertical height from the base to the top of berm, 2H:1V above that.
2. See details regarding skimmer design specifications
3. See details on silt fence baffle spacing.

SEEDING AND MULCHING

SEEDING AND MULCHING SHALL BE CARRIED OUT IMMEDIATELY BEHIND CONSTRUCTION IN ACCORDANCE WITH FOLLOWING SPECIFICATIONS.

SEEDING SPECIFICATIONS			
SHOULDER, SIDE DITCHES, SLOPES (MAX 3:1)			
SEEDING PERIOD	TYPE	APPLICATION RATE	
		PER ACRE	PER 1000 SF
AUGUST 15 - NOVEMBER 1	TALL FESCUE	300#	7#
NOVEMBER 1 - MARCH 1	TALL FESCUE AND	300#	7#
	ABRUZZI RYE	25#	0.6#
MARCH 1 - APRIL 15	TALL FESCUE	300#	7#
APRIL 15 - JUNE 30	HULLED COMMON BERMUDAGRASS	25#	0.6#
JULY 1 - AUGUST 15	TALL FESCUE AND	120#	2.8#
	*BROWNTOP MILLET	35#	0.8#
	*OR SORHGUM-SUDAN HYBRIDS	30#	0.7#

SEEDING SPECIFICATIONS			
SLOPES (3:1 TO 2:1)			
SEEDING PERIOD	TYPE	APPLICATION RATE	
		PER ACRE	PER 1000 SF
MARCH 1 - JUNE 1	SERICEA LESPEDEZA (SCARIFIED)	50#	1.2#
	AND		
MARCH 1 - APRIL 15	ADD TALL FESCUE	120#	2.8#
MARCH 1 - JUNE 30	OR ADD WEEPING LOVE GRASS	10#	0.2#
MARCH 1 - JUNE 30	OR ADD HULLED COMMON BERMUDAGRASS	25#	0.6#
JUNE 1 - SEPTEMBER 1	*TALL FESCUE AND	120#	2.8#
	*OR BROWNTOP MILLET	35#	0.8#
	*OR SORGHUM-SUDAN HYBRIDS	30#	0.7#
SEPTEMBER 1 - MARCH 1	SERICEA LESPEDEZA (UNHULLED, UNSCARIFIED)	70#	1.6#
	AND TALL FESCUE	120#	2.8#
NOVEMBER 1 - MARCH 1	ADD ABRUZZI RYE	25#	0.6#

*TEMPORARY - RESEED ACCORDING TO OPTIMUM SEASON FOR DESIRED PERMANENT VEGETATION. DO NOT ALLOW TEMPORARY COVER TO GROW TO MORE THAN 12 INCHES HEIGHT BEFORE MOWING, OTHERWISE FESCUE MAY BE SHADED OUT.

CONSULT WAKE SOIL AND WATER CONSERVATION DISTRICT OR NORTH CAROLINA DIVISION OF SOIL AND WATER CONSERVATION FOR ADDITIONAL INFORMATION CONCERNING OTHER ALTERNATIVES FOR VEGETATION OF DENUDED AREAS. THE ABOVE VEGETATION RATES ARE THOSE THAT DO WELL UNDER LOCAL CONDITIONS; OTHER SEEDING RATE COMBINATIONS ARE POSSIBLE.

SEEDBED PREPARATION

1. CHISEL COMPACTED AREAS AND SPREAD TOPSOIL 3 INCHES DEEP OVER ADVERSE SOIL CONDITIONS,IF AVAILABLE.
2. RIP THE ENTIRE AREA TO 6-INCH DEPTH.
3. REMOVE ALL LOOSE ROCK, ROOTS AND OTHER OBSTRUCTIONS LEAVING SURFACE REASONABLE SMOOTH AND UNIFORM.
4. APPLY AGRICULTURAL LIME, FERTILIZER AND SUPERPHOSPHATE UNIFORMLY AND MIX WITH SOIL (SEE BELOW).
5. CONTINUE TILLAGE UNTIL A WELL-PULVERIZED, FIRM, REASONABLE UNIFORM SEEDBED IS PREPARED 4 TO 6 INCHES DEEP.
6. SEED ON A FRESHLY PREPARED SEEDBED AND COVER SEED LIGHTLY WITH SEEDING EQUIPMENT OR CULTIPACK AFTER SEEDING.
7. MULCH IMMEDIATELY AFTER SEEDING AND ANCHOR MULCH.
8. INSPECT ALL SEEDED AREAS AND MAKE NECESSARY REPAIRS OR RESEEDINGS WITHIN THE PLANTING SEASON, IF POSSIBLE. IF STAND SHOULD BE OVER 60 PERCENT DAMAGED, RE-ESTABLISH FOLLOWING ORIGINAL LIME, FERTILIZER AND SEEDING RATES.
9. CONSULT WAKE SOIL AND WATER CONSERVATION DISTRICT ON MAINTENANCE TREATMENT AND FERTILIZATION AFTER PERMANENT COVER IS ESTABLISHED.

* APPLY:

AGRICULTURAL LIMESTONE	- 2 TONS/ACRE (3/TONS/ACRES IN CLAY SOILS)
FERTILIZER	- 1000 LB/ACRE -10-10-10
SUPERPHOSPHATE	- 500 LB/ACRE - 20 PERCENT ANALYSIS
MULCH	- 2 TONS/ACRE - SMALL GRAIN STRAW
ANCHOR	- ASPHALT EMULSION @ 300 GALS/ACRE

EROSION CONTROL, STORMWATER AND FLOODPLAIN MANAGEMENT

APPROVED

EROSION CONTROL ☐ S-__________

STORMWATER MGMT. ☐ S-__________

FLOOD STUDY ☐ S-______________

DATE______________

WAKE COUNTY NORTH CAROLINA

EFFECTIVE: 08/23/17

ENVIRONMENTAL CONSULTANT SIGNATURE

DISTURBED AREA = 25.95 AC.

ALL CONSTRUCTION SHALL CONFORM WITH THE LATEST VERSION OF THE TOWN OF ROLESVILLE AND WAKE COUNTY SPECIFICATIONS AND DETAILS.

811®

Know what's **below.**
Call before you dig.

CONTRACTOR SHALL NOTIFY "NC811" (811) OR (1-800-632-4949) AT LEAST 3 FULL BUSINESS DAYS PRIOR TO BEGINNING CONSTRUCTION OR EXCAVATION TO HAVE EXISTING UTILITIES LOCATED. CONTRACTOR SHALL CONTACT ANY LOCAL UTILITIES THAT PROVIDE THEIR OWN LOCATOR SERVICES INDEPENDENT OF "NC811". REPORT ANY DISCREPANCIES TO THE ENGINEER IMMEDIATELY.

FINAL DRAWING - NOT RELEASED FOR CONSTRUCTION

MCADAMS

The John R. McAdams Company, Inc.
2905 Meridian Parkway
Durham, NC 27713

phone 919. 361. 5000
fax 919. 361. 2269
license number: C-0293, C-187

www.mcadamsco.com

CLIENT

ASHTON WOODS
5711 SIX FORKS ROAD, SUITE 300
RALEIGH, NORTH CAROLINA 27609

ASHTON WOODS™

THE POINT
PHASES 11-13
CONSTRUCTION DRAWINGS
EAST YOUNG STREET
TOWN OF ROLESVILLE, WAKE FOREST TOWNSHIP, WAKE COUNTY, NORTH CAROLINA

CD XX-XX

NORTH CAROLINA PROFESSIONAL SEAL 22630 ENGINEER WILLIAM T. O'DANIEL
PRELIMINARY NOT FOR CONSTRUCTION

REVISIONS

NO. DATE

PLAN INFORMATION

PROJECT NO.	AWH-20000
FILENAME	AWH20000-CD-PKG-02-EC3
CHECKED BY	.
DRAWN BY	.
SCALE	N.T.S.
DATE	10. 27. 2022

SHEET

EROSION CONTROL NOTES

C6.00

M:\Projects\AWH\AWH-20000\04-Production\Engineering\The Point North\Current Drawings\AWH20000-North-EC3.dwg, 10/27/2022 8:49:42 AM, Sherrill Williams

M:\Projects\AWH\AWH-20000\04-Production\Engineering\The Point North\Current Drawings\AWH20000-North-EC3.dwg, 10/27/2022 8:49:40 AM, Williams, 1:1

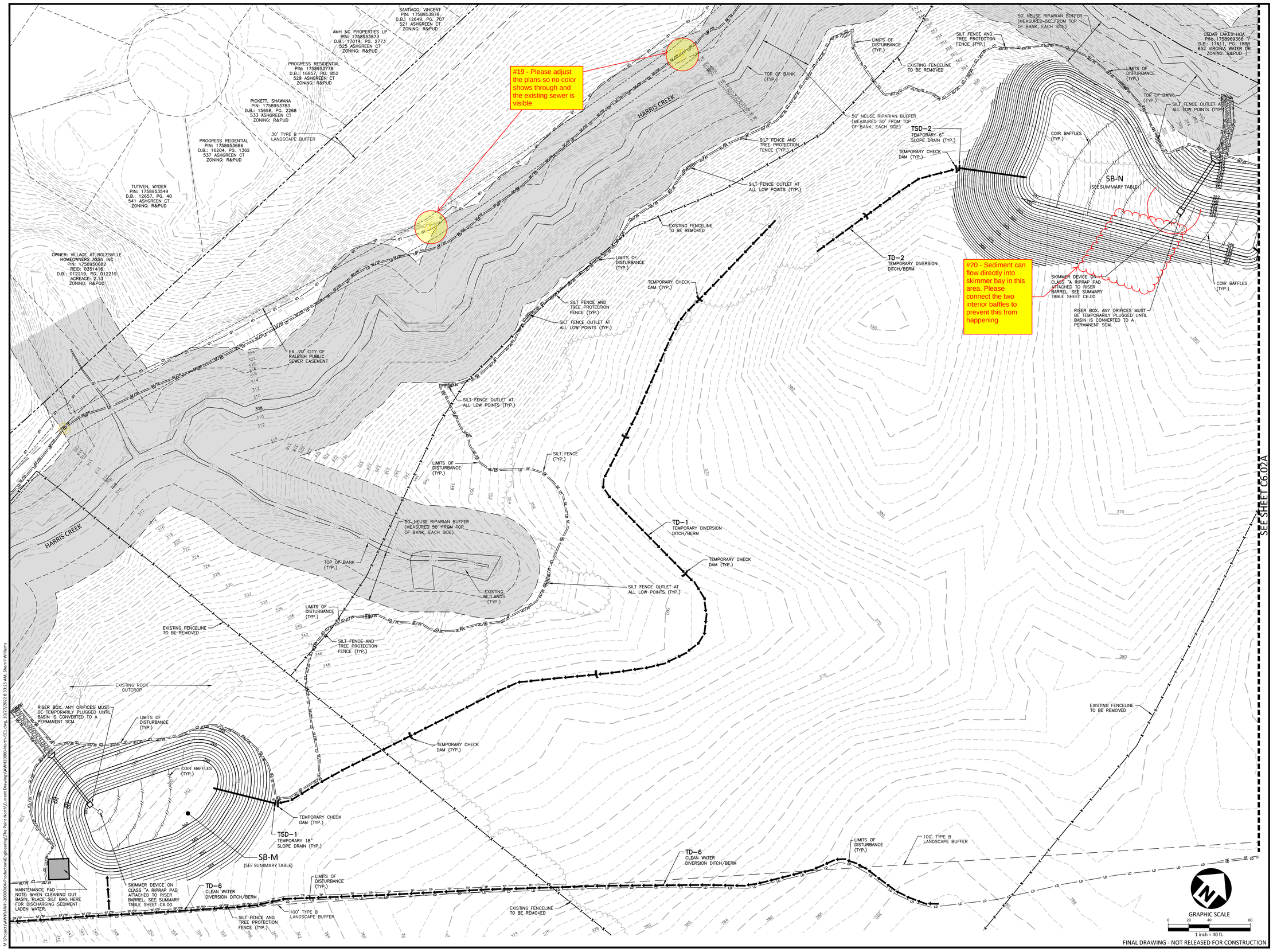

FINAL DRAWING - NOT RELEASED FOR CONSTRUCTION

M:\Projects\AWH\AWH-20000\04-Production\Engineering\The Point North\Current Drawings\AWH20000-North-EC1.dwg, 10/27/2022 8:53:25 AM, Sherrill Williams

M:\Projects\AWH\AWH-20000\04-Production\Engineering\The Point North\Current Drawings\AWH20000-North-EC1.dwg, 10/27/2022 8:53:18 AM, Williams, 1:1

McADAMS
The John R. McAdams Company, Inc.
2905 Meridian Parkway
Durham, NC 27713

phone 919. 361. 5000
fax 919. 361. 2269
license number: C-0293, C-187

www.mcadamsco.com

CLIENT

ASHTON WOODS
5711 SIX FORKS ROAD, SUITE 300
RALEIGH, NORTH CAROLINA 27609

ASHTON WOODS

THE POINT PHASES 11-13

CONSTRUCTION DRAWINGS
EAST YOUNG STREET
TOWN OF ROLESVILLE, WAKE FOREST TOWNSHIP, WAKE COUNTY, NORTH CAROLINA

CD XX-XX

NORTH CAROLINA PROFESSIONAL SEAL 22630 ENGINEER WILLIAM T. O'DANIEL
NOT FOR CONSTRUCTION

REVISIONS

NO. DATE

PLAN INFORMATION

PROJECT NO.	AWH-20000
FILENAME	AWH20000-NORTH-EC1
CHECKED BY	.
DRAWN BY	.
SCALE	1"=40'
DATE	10. 27. 2022

SHEET

EROSION CONTROL PLAN - STAGE 1 AREA "A"

C6.01A

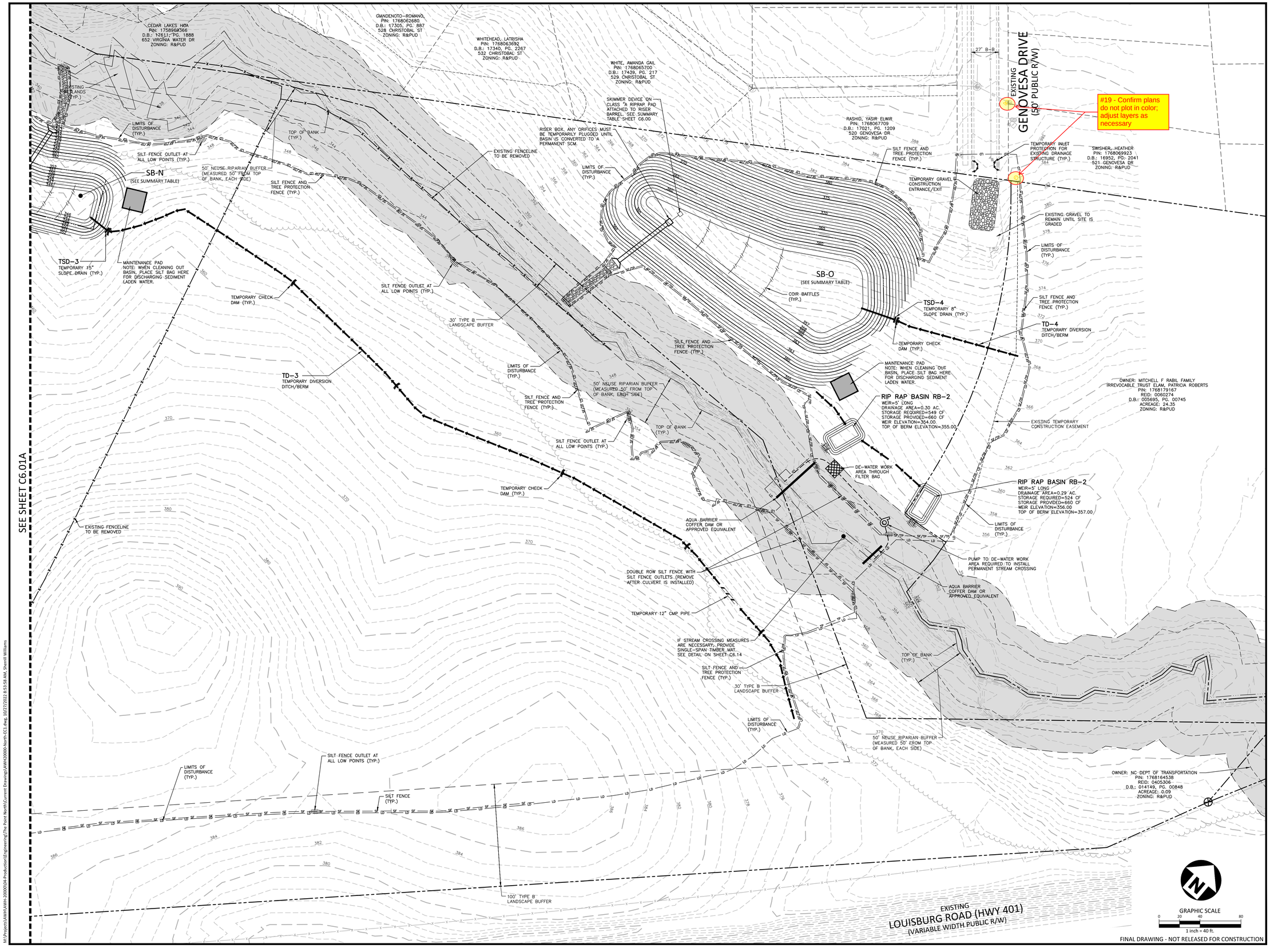

FINAL DRAWING - NOT RELEASED FOR CONSTRUCTION

McADAMS
The John R. McAdams Company, Inc.
2905 Meridian Parkway
Durham, NC 27713

phone 919. 361. 5000
fax 919. 361. 2269
license number: C-0293, C-187

www.mcadamsco.com

CLIENT

ASHTON WOODS
5711 SIX FORKS ROAD, SUITE 300
RALEIGH, NORTH CAROLINA 27609

ASHTON WOODS

THE POINT
PHASES 11-13
CONSTRUCTION DRAWINGS
EAST YOUNG STREET
TOWN OF ROLESVILLE, WAKE FOREST TOWNSHIP, WAKE COUNTY, NORTH CAROLINA

CD XX-XX

NORTH CAROLINA PROFESSIONAL SEAL 22630 ENGINEER WILLIAM T. O'DANIEL

NOT FOR CONSTRUCTION

REVISIONS

NO.	DATE

PLAN INFORMATION

PROJECT NO.	AWH-20000
FILENAME	AWH20000-NORTH-EC1
CHECKED BY	.
DRAWN BY	.
SCALE	1"=40'
DATE	10. 27. 2022

SHEET

EROSION CONTROL PLAN - STAGE 1 AREA "B"

C6.02A

M:\Projects\AWH\AWH-20000\04-Production\Engineering\The Point North\Current Drawings\AWH20000-North-EC1.dwg, 10/27/2022 8:53:52 AM, Williams, 1:1

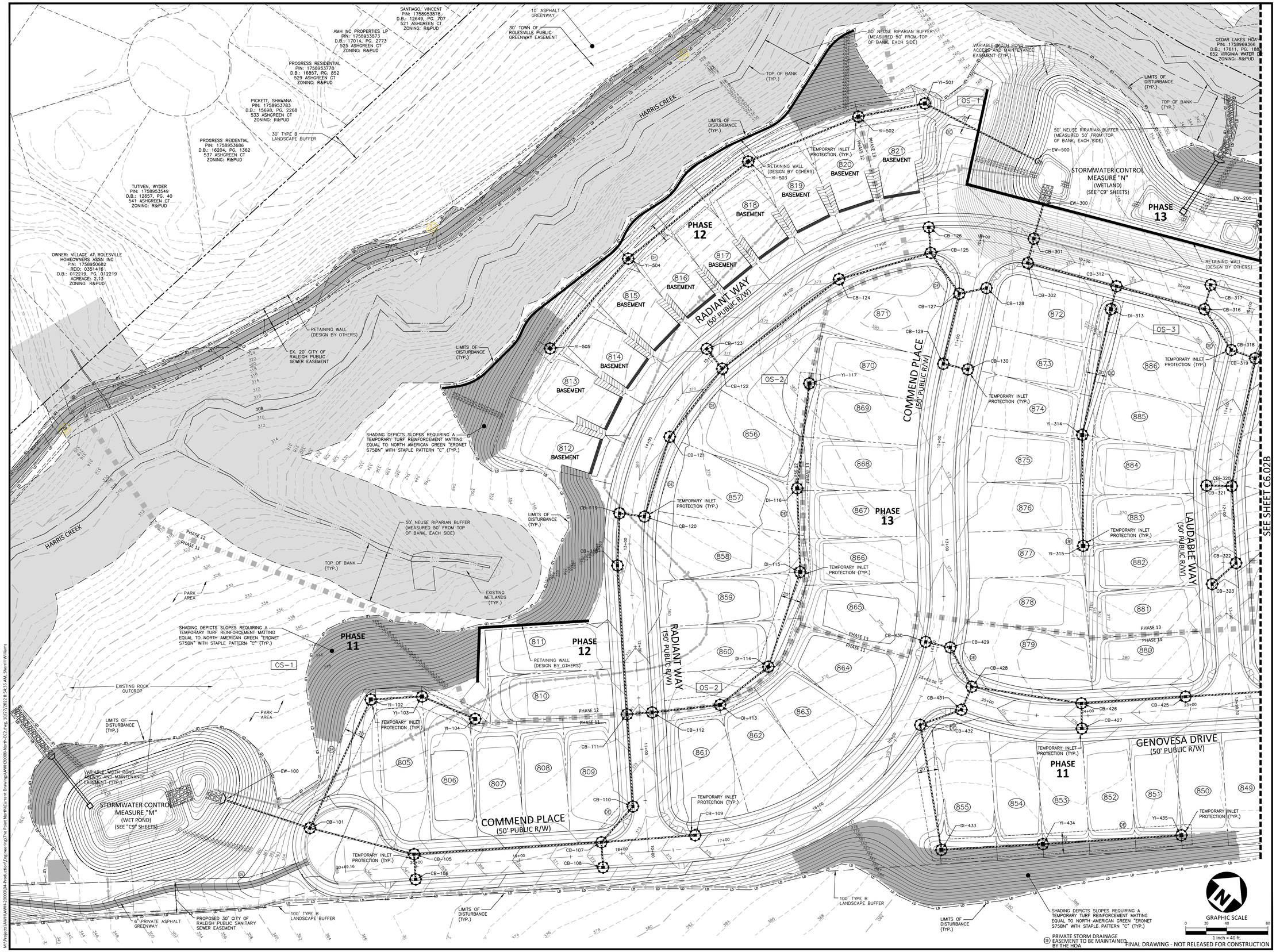

FINAL DRAWING - NOT RELEASED FOR CONSTRUCTION

McADAMS
The John R. McAdams Company, Inc.
2905 Meridian Parkway
Durham, NC 27713

phone 919. 361. 5000
fax 919. 361. 2269
license number: C-0293, C-187

www.mcadamsco.com

CLIENT

ASHTON WOODS
5711 SIX FORKS ROAD, SUITE 300
RALEIGH, NORTH CAROLINA 27609

ASHTON WOODS

THE POINT
PHASES 11-13
CONSTRUCTION DRAWINGS
EAST YOUNG STREET
TOWN OF ROLESVILLE, WAKE FOREST TOWNSHIP, WAKE COUNTY, NORTH CAROLINA

CD XX-XX

NORTH CAROLINA PROFESSIONAL SEAL 22630 ENGINEER WILLIAM T. O'DANIEL
NOT FOR CONSTRUCTION

REVISIONS

NO. DATE

PLAN INFORMATION

PROJECT NO.	AWH-20000
FILENAME	AWH20000-NORTH-EC2
CHECKED BY	.
DRAWN BY	.
SCALE	1"=40'
DATE	10. 27. 2022

SHEET

EROSION CONTROL PLAN - STAGE 2 AREA "A"

C6.01B

M:\Projects\AWH\AWH-20000\04-Production\Engineering\The Point North\Current Drawings\AWH20000-North-EC2.dwg, 10/27/2022 8:54:28 AM, Williams, 1:1

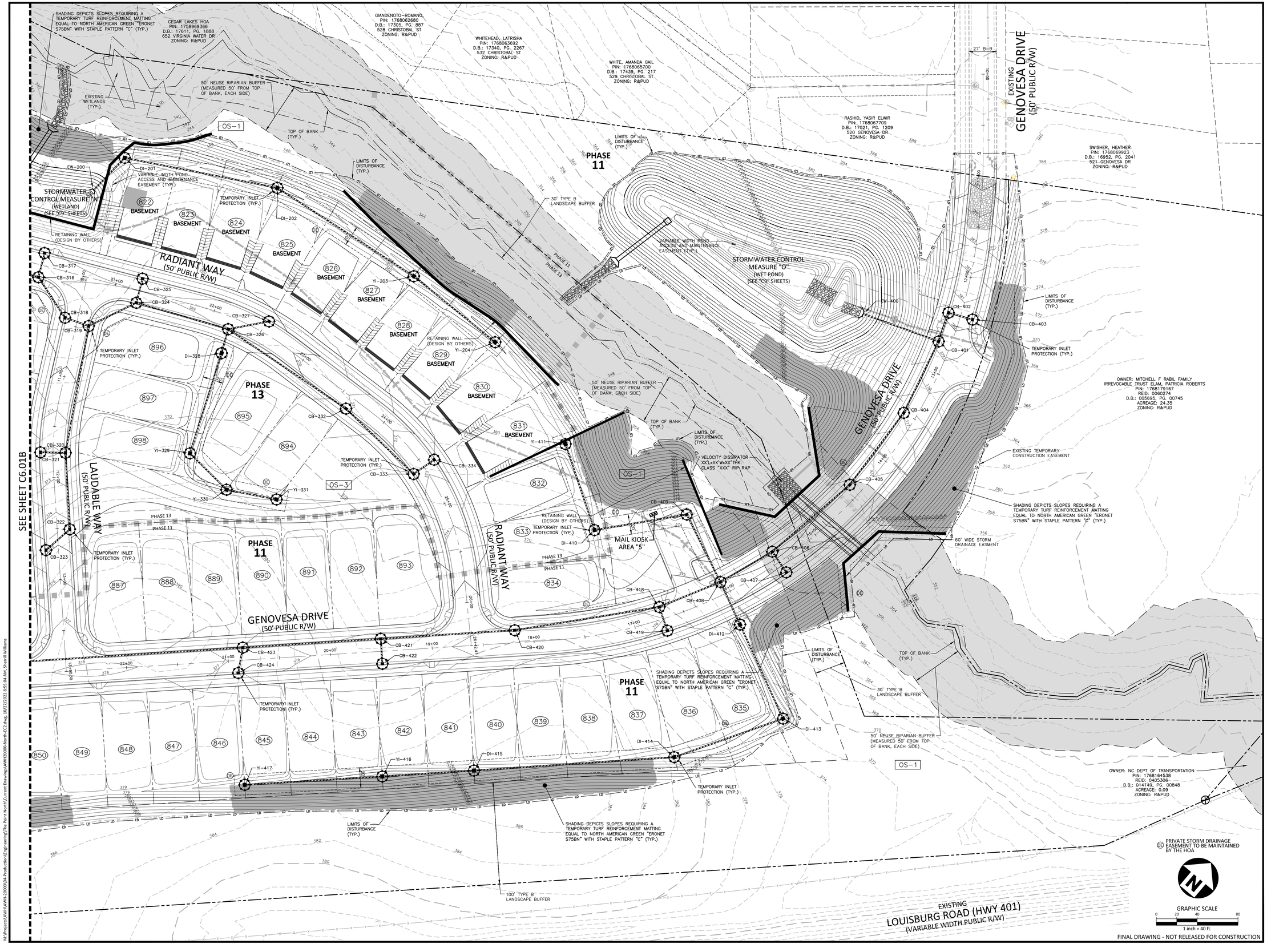

FINAL DRAWING - NOT RELEASED FOR CONSTRUCTION

McADAMS
The John R. McAdams Company, Inc.
2905 Meridian Parkway
Durham, NC 27713

phone 919. 361. 5000
fax 919. 361. 2269
license number: C-0293, C-187

www.mcadamsco.com

CLIENT

ASHTON WOODS
5711 SIX FORKS ROAD, SUITE 300
RALEIGH, NORTH CAROLINA 27609

ASHTON WOODS

THE POINT PHASES 11-13

CONSTRUCTION DRAWINGS
EAST YOUNG STREET
TOWN OF ROLESVILLE, WAKE FOREST TOWNSHIP, WAKE COUNTY, NORTH CAROLINA

CD XX-XX

NORTH CAROLINA PROFESSIONAL SEAL 22630 ENGINEER WILLIAM T. O'DANIEL
NOT FOR CONSTRUCTION

REVISIONS

NO. DATE

PLAN INFORMATION

PROJECT NO.	AWH-20000
FILENAME	AWH20000-NORTH-EC2
CHECKED BY	.
DRAWN BY	.
SCALE	1"=40'
DATE	10. 27. 2022

SHEET

EROSION CONTROL PLAN - STAGE 2 AREA "B"

C6.02B

M:\Projects\AWH\AWH-20000\04-Production\Engineering\The Point North\Current Drawings\AWH20000-North-EC2.dwg, 10/27/2022 8:54:57 AM, Williams, 1:1

GROUND STABILIZATION AND MATERIALS HANDLING PRACTICES FOR COMPLIANCE WITH THE NCG01 CONSTRUCTION GENERAL PERMIT

Implementing the details and specifications on this plan sheet will result in the construction activity being considered compliant with the Ground Stabilization and Materials Handling sections of the NCG01 Construction General Permit (Sections E and F, respectively). The permittee shall comply with the Erosion and Sediment Control plan approved by the delegated authority having jurisdiction. All details and specifications shown on this sheet may not apply depending on site conditions and the delegated authority having jurisdiction.

SECTION E: GROUND STABILIZATION

Required Ground Stabilization Timeframes

Site Area Description	Stabilize within this many calendar days after ceasing land disturbance	Timeframe variations
(a) Perimeter dikes, swales, ditches, and perimeter slopes	7	None
(b) High Quality Water (HQW) Zones	7	None
(c) Slopes steeper than 3:1	7	If slopes are 10' or less in length and are not steeper than 2:1, 14 days are allowed
(d) Slopes 3:1 to 4:1	14	-7 days for slopes greater than 50' in length and with slopes steeper than 4:1 -7 days for perimeter dikes, swales, ditches, perimeter slopes and HQW Zones -10 days for Falls Lake Watershed
(e) Areas with slopes flatter than 4:1	14	-7 days for perimeter dikes, swales, ditches, perimeter slopes and HQW Zones -10 days for Falls Lake Watershed unless there is zero slope

Note: After the permanent cessation of construction activities, any areas with temporary ground stabilization shall be converted to permanent ground stabilization as soon as practicable but in no case longer than 90 calendar days after the last land disturbing activity. Temporary ground stabilization shall be maintained in a manner to render the surface stable against accelerated erosion until permanent ground stabilization is achieved.

GROUND STABILIZATION SPECIFICATION

Stabilize the ground sufficiently so that rain will not dislodge the soil. Use one of the techniques in the table below:

Temporary Stabilization	Permanent Stabilization
• Temporary grass seed covered with straw or other mulches and tackifiers • Hydroseeding • Rolled erosion control products with or without temporary grass seed • Appropriately applied straw or other mulch • Plastic sheeting	• Permanent grass seed covered with straw or other mulches and tackifiers • Geotextile fabrics such as permanent soil reinforcement matting • Hydroseeding • Shrubs or other permanent plantings covered with mulch • Uniform and evenly distributed ground cover sufficient to restrain erosion • Structural methods such as concrete, asphalt or retaining walls • Rolled erosion control products with grass seed

POLYACRYLAMIDES (PAMS) AND FLOCCULANTS

1. Select flocculants that are appropriate for the soils being exposed during construction, selecting from the *NC DWR List of Approved PAMS/Flocculants*.
2. Apply flocculants at or before the inlets to Erosion and Sediment Control Measures.
3. Apply flocculants at the concentrations specified in the *NC DWR List of Approved PAMS/Flocculants* and in accordance with the manufacturer's instructions.
4. Provide ponding area for containment of treated Stormwater before discharging offsite.
5. Store flocculants in leak-proof containers that are kept under storm-resistant cover or surrounded by secondary containment structures.

EQUIPMENT AND VEHICLE MAINTENANCE

1. Maintain vehicles and equipment to prevent discharge of fluids.
2. Provide drip pans under any stored equipment.
3. Identify leaks and repair as soon as feasible, or remove leaking equipment from the project.
4. Collect all spent fluids, store in separate containers and properly dispose as hazardous waste (recycle when possible).
5. Remove leaking vehicles and construction equipment from service until the problem has been corrected.
6. Bring used fuels, lubricants, coolants, hydraulic fluids and other petroleum products to a recycling or disposal center that handles these materials.

LITTER, BUILDING MATERIAL AND LAND CLEARING WASTE

1. Never bury or burn waste. Place litter and debris in approved waste containers.
2. Provide a sufficient number and size of waste containers (e.g dumpster, trash receptacle) on site to contain construction and domestic wastes.
3. Locate waste containers at least 50 feet away from storm drain inlets and surface waters unless no other alternatives are reasonably available.
4. Locate waste containers on areas that do not receive substantial amounts of runoff from upland areas and does not drain directly to a storm drain, stream or wetland.
5. Cover waste containers at the end of each workday and before storm events or provide secondary containment. Repair or replace damaged waste containers.
6. Anchor all lightweight items in waste containers during times of high winds.
7. Empty waste containers as needed to prevent overflow. Clean up immediately if containers overflow.
8. Dispose waste off-site at an approved disposal facility.
9. On business days, clean up and dispose of waste in designated waste containers.

PAINT AND OTHER LIQUID WASTE

1. Do not dump paint and other liquid waste into storm drains, streams or wetlands.
2. Locate paint washouts at least 50 feet away from storm drain inlets and surface waters unless no other alternatives are reasonably available.
3. Contain liquid wastes in a controlled area.
4. Containment must be labeled, sized and placed appropriately for the needs of site.
5. Prevent the discharge of soaps, solvents, detergents and other liquid wastes from construction sites.

PORTABLE TOILETS

1. Install portable toilets on level ground, at least 50 feet away from storm drains, streams or wetlands unless there is no alternative reasonably available. If 50 foot offset is not attainable, provide relocation of portable toilet behind silt fence or place on a gravel pad and surround with sand bags.
2. Provide staking or anchoring of portable toilets during periods of high winds or in high foot traffic areas.
3. Monitor portable toilets for leaking and properly dispose of any leaked material. Utilize a licensed sanitary waste hauler to remove leaking portable toilets and replace with properly operating unit.

EARTHEN STOCKPILE MANAGEMENT

1. Show stockpile locations on plans. Locate earthen-material stockpile areas at least 50 feet away from storm drain inlets, sediment basins, perimeter sediment controls and surface waters unless it can be shown no other alternatives are reasonably available.
2. Protect stockpile with silt fence installed along toe of slope with a minimum offset of five feet from the toe of stockpile.
3. Provide stable stone access point when feasible.
4. Stabilize stockpile within the timeframes provided on this sheet and in accordance with the approved plan and any additional requirements. Soil stabilization is defined as vegetative, physical or chemical coverage techniques that will restrain accelerated erosion on disturbed soils for temporary or permanent control needs.

CONCRETE WASHOUTS

1. Do not discharge concrete or cement slurry from the site.
2. Dispose of, or recycle settled, hardened concrete residue in accordance with local and state solid waste regulations and at an approved facility.
3. Manage washout from mortar mixers in accordance with the above item and in addition place the mixer and associated materials on impervious barrier and within lot perimeter silt fence.
4. Install temporary concrete washouts per local requirements, where applicable. If an alternate method or product is to be used, contact your approval authority for review and approval. If local standard details are not available, use one of the two types of temporary concrete washouts provided on this detail.
5. Do not use concrete washouts for dewatering or storing defective curb or sidewalk sections. Stormwater accumulated within the washout may not be pumped into or discharged to the storm drain system or receiving surface waters. Liquid waste must be pumped out and removed from project.
6. Locate washouts at least 50 feet from storm drain inlets and surface waters unless it can be shown that no other alternatives are reasonably available. At a minimum, install protection of storm drain inlet(s) closest to the washout which could receive spills or overflow.
7. Locate washouts in an easily accessible area, on level ground and install a stone entrance pad in front of the washout. Additional controls may be required by the approving authority.
8. Install at least one sign directing concrete trucks to the washout within the project limits. Post signage on the washout itself to identify this location.
9. Remove leavings from the washout when at approximately 75% capacity to limit overflow events. Replace the tarp, sand bags or other temporary structural components when no longer functional. When utilizing alternative or proprietary products, follow manufacturer's instructions.
10. At the completion of the concrete work, remove remaining leavings and dispose of in an approved disposal facility. Fill pit, if applicable, and stabilize any disturbance caused by removal of washout.

HERBICIDES, PESTICIDES AND RODENTICIDES

1. Store and apply herbicides, pesticides and rodenticides in accordance with label restrictions.
2. Store herbicides, pesticides and rodenticides in their original containers with the label, which lists directions for use, ingredients and first aid steps in case of accidental poisoning.
3. Do not store herbicides, pesticides and rodenticides in areas where flooding is possible or where they may spill or leak into wells, stormwater drains, ground water or surface water. If a spill occurs, clean area immediately.
4. Do not stockpile these materials onsite.

HAZARDOUS AND TOXIC WASTE

1. Create designated hazardous waste collection areas on-site.
2. Place hazardous waste containers under cover or in secondary containment.
3. Do not store hazardous chemicals, drums or bagged materials directly on the ground.

NCG01 GROUND STABILIZATION AND MATERIALS HANDLING

EFFECTIVE: 04/01/19

PART III
SELF-INSPECTION, RECORDKEEPING AND REPORTING

SECTION A: SELF-INSPECTION

Self-inspections are required during normal business hours in accordance with the table below. When adverse weather or site conditions would cause the safety of the inspection personnel to be in jeopardy, the inspection may be delayed until the next business day on which it is safe to perform the inspection. In addition, when a storm event of equal to or greater than 1.0 inch occurs outside of normal business hours, the self-inspection shall be performed upon the commencement of the next business day. Any time when inspections were delayed shall be noted in the Inspection Record.

Inspect	Frequency (during normal business hours)	Inspection records must include:
(1) Rain gauge maintained in good working order	Daily	Daily rainfall amounts. If no daily rain gauge observations are made during weekend or holiday periods, and no individual-day rainfall information is available, record the cumulative rain measurement for those un-attended days (and this will determine if a site inspection is needed). Days on which no rainfall occurred shall be recorded as "zero." The permittee may use another rain-monitoring device approved by the Division.
(2) E&SC Measures	At least once per 7 calendar days and within 24 hours of a rain event ≥ 1.0 inch in 24 hours	1. Identification of the measures inspected, 2. Date and time of the inspection, 3. Name of the person performing the inspection, 4. Indication of whether the measures were operating properly, 5. Description of maintenance needs for the measure, 6. Description, evidence, and date of corrective actions taken.
(3) Stormwater discharge outfalls (SDOs)	At least once per 7 calendar days and within 24 hours of a rain event ≥ 1.0 inch in 24 hours	1. Identification of the discharge outfalls inspected, 2. Date and time of the inspection, 3. Name of the person performing the inspection, 4. Evidence of indicators of stormwater pollution such as oil sheen, floating or suspended solids or discoloration, 5. Indication of visible sediment leaving the site, 6. Description, evidence, and date of corrective actions taken.
(4) Perimeter of site	At least once per 7 calendar days and within 24 hours of a rain event ≥ 1.0 inch in 24 hours	If visible sedimentation is found outside site limits, then a record of the following shall be made: 1. Actions taken to clean up or stabilize the sediment that has left the site limits, 2. Description, evidence, and date of corrective actions taken, and 3. An explanation as to the actions taken to control future releases.
(5) Streams or wetlands onsite or offsite (where accessible)	At least once per 7 calendar days and within 24 hours of a rain event ≥ 1.0 inch in 24 hours	If the stream or wetland has increased visible sedimentation or a stream has visible increased turbidity from the construction activity, then a record of the following shall be made: 1. Description, evidence and date of corrective actions taken, and 2. Records of the required reports to the appropriate Division Regional Office per Part III, Section C, Item (2)(a) of this permit.
(6) Ground stabilization measures	After each phase of grading	1. The phase of grading (installation of perimeter E&SC measures, clearing and grubbing, installation of storm drainage facilities, completion of all land-disturbing activity, construction or redevelopment, permanent ground cover). 2. Documentation that the required ground stabilization measures have been provided within the required timeframe or an assurance that they will be provided as soon as possible.

NOTE: The rain inspection resets the required 7 calendar day inspection requirement.

PART III
SELF-INSPECTION, RECORDKEEPING AND REPORTING

SECTION B: RECORDKEEPING

1. E&SC Plan Documentation

The approved E&SC plan as well as any approved deviation shall be kept on the site. The approved E&SC plan must be kept up-to-date throughout the coverage under this permit. The following items pertaining to the E&SC plan shall be kept on site and available for inspection at all times during normal business hours.

Item to Document	Documentation Requirements
(a) Each E&SC measure has been installed and does not significantly deviate from the locations, dimensions and relative elevations shown on the approved E&SC plan.	Initial and date each E&SC measure on a copy of the approved E&SC plan or complete, date and sign an inspection report that lists each E&SC measure shown on the approved E&SC plan. This documentation is required upon the initial installation of the E&SC measures or if the E&SC measures are modified after initial installation.
(b) A phase of grading has been completed.	Initial and date a copy of the approved E&SC plan or complete, date and sign an inspection report to indicate completion of the construction phase.
(c) Ground cover is located and installed in accordance with the approved E&SC plan.	Initial and date a copy of the approved E&SC plan or complete, date and sign an inspection report to indicate compliance with approved ground cover specifications.
(d) The maintenance and repair requirements for all E&SC measures have been performed.	Complete, date and sign an inspection report.
(e) Corrective actions have been taken to E&SC measures.	Initial and date a copy of the approved E&SC plan or complete, date and sign an inspection report to indicate the completion of the corrective action.

2. Additional Documentation to be Kept on Site

In addition to the E&SC plan documents above, the following items shall be kept on the site and available for inspectors at all times during normal business hours, unless the Division provides a site-specific exemption based on unique site conditions that make this requirement not practical:

(a) This General Permit as well as the Certificate of Coverage, after it is received.

(b) Records of inspections made during the previous twelve months. The permittee shall record the required observations on the Inspection Record Form provided by the Division or a similar inspection form that includes all the required elements. Use of electronically-available records in lieu of the required paper copies will be allowed if shown to provide equal access and utility as the hard-copy records.

3. Documentation to be Retained for Three Years

All data used to complete the e-NOI and all inspection records shall be maintained for a period of three years after project completion and made available upon request. [40 CFR 122.41]

PART III
SELF-INSPECTION, RECORDKEEPING AND REPORTING

SECTION C: REPORTING

1. Occurrences that Must be Reported

Permittees shall report the following occurrences:

(a) Visible sediment deposition in a stream or wetland.

(b) Oil spills if:
- They are 25 gallons or more,
- They are less than 25 gallons but cannot be cleaned up within 24 hours,
- They cause sheen on surface waters (regardless of volume), or
- They are within 100 feet of surface waters (regardless of volume).

(c) Releases of hazardous substances in excess of reportable quantities under Section 311 of the Clean Water Act (Ref: 40 CFR 110.3 and 40 CFR 117.3) or Section 102 of CERCLA (Ref: 40 CFR 302.4) or G.S. 143-215.85.

(d) Anticipated bypasses and unanticipated bypasses.

(e) Noncompliance with the conditions of this permit that may endanger health or the environment.

2. Reporting Timeframes and Other Requirements

After a permittee becomes aware of an occurrence that must be reported, he shall contact the appropriate Division regional office within the timeframes and in accordance with the other requirements listed below. Occurrences outside normal business hours may also be reported to the Department's Environmental Emergency Center personnel at (800) 858-0368.

Occurrence	Reporting Timeframes (After Discovery) and Other Requirements
(a) Visible sediment deposition in a stream or wetland	• ***Within 24 hours***, an oral or electronic notification. • ***Within 7 calendar days***, a report that contains a description of the sediment and actions taken to address the cause of the deposition. Division staff may waive the requirement for a written report on a case-by-case basis. • If the stream is named on the NC 303(d) list as impaired for sediment-related causes, the permittee may be required to perform additional monitoring, inspections or apply more stringent practices if staff determine that additional requirements are needed to assure compliance with the federal or state impaired-waters conditions.
(b) Oil spills and release of hazardous substances per Item 1(b)-(c) above	• ***Within 24 hours***, an oral or electronic notification. The notification shall include information about the date, time, nature, volume and location of the spill or release.
(c) Anticipated bypasses [40 CFR 122.41(m)(3)]	• ***A report at least ten days before the date of the bypass, if possible***. The report shall include an evaluation of the anticipated quality and effect of the bypass.
(d) Unanticipated bypasses [40 CFR 122.41(m)(3)]	• ***Within 24 hours***, an oral or electronic notification. • ***Within 7 calendar days,*** a report that includes an evaluation of the quality and effect of the bypass.
(e) Noncompliance with the conditions of this permit that may endanger health or the environment[40 CFR 122.41(l)(7)]	• ***Within 24 hours***, an oral or electronic notification. • ***Within 7 calendar days***, a report that contains a description of the noncompliance, and its causes; the period of noncompliance, including exact dates and times, and if the noncompliance has not been corrected, the anticipated time noncompliance is expected to continue; and steps taken or planned to reduce, eliminate, and prevent reoccurrence of the noncompliance. [40 CFR 122.41(l)(6). • Division staff may waive the requirement for a written report on a case-by-case basis.

PART II, SECTION G, ITEM (4)
DRAW DOWN OF SEDIMENT BASINS FOR MAINTENANCE OR CLOSE OUT

Sediment basins and traps that receive runoff from drainage areas of one acre or more shall use outlet structures that withdraw water from the surface when these devices need to be drawn down for maintenance or close out unless this is infeasible. The circumstances in which it is not feasible to withdraw water from the surface shall be rare (for example, times with extended cold weather). Non-surface withdrawals from sediment basins shall be allowed only when all of the following criteria have been met:

(a) The E&SC plan authority has been provided with documentation of the non-surface withdrawal and the specific time periods or conditions in which it will occur. The non-surface withdrawal shall not commence until the E&SC plan authority has approved these items,
(b) The non-surface withdrawal has been reported as an anticipated bypass in accordance with Part III, Section C, Item (2)(c) and (d) of this permit,
(c) Dewatering discharges are treated with controls to minimize discharges of pollutants from stormwater that is removed from the sediment basin. Examples of appropriate controls include properly sited, designed and maintained dewatering tanks, weir tanks, and filtration systems,
(d) Vegetated, upland areas of the sites or a properly designed stone pad is used to the extent feasible at the outlet of the dewatering treatment devices described in Item (c) above,
(e) Velocity dissipation devices such as check dams, sediment traps, and riprap are provided at the discharge points of all dewatering devices, and
(f) Sediment removed from the dewatering treatment devices described in Item (c) above is disposed of in a manner that does not cause deposition of sediment into waters of the United States.

NCG01 SELF-INSPECTION, RECORDKEEPING AND REPORTING

EFFECTIVE: 04/01/19

ONSITE CONCRETE WASHOUT STRUCTURE WITH LINER

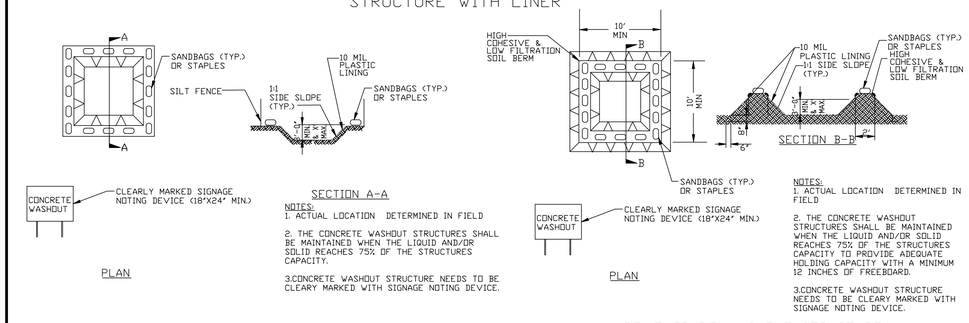

FINAL DRAWING - NOT RELEASED FOR CONSTRUCTION

MCADAMS
The John R. McAdams Company, Inc.
2905 Meridian Parkway
Durham, NC 27713

phone 919. 361. 5000
fax 919. 361. 2269
license number: C-0293, C-187

www.mcadamsco.com

CLIENT

ASHTON WOODS
5711 SIX FORKS ROAD, SUITE 300
RALEIGH, NORTH CAROLINA 27609

ASHTON WOODS

THE POINT
PHASES 11-13
CONSTRUCTION DRAWINGS
EAST YOUNG STREET
TOWN OF ROLESVILLE, WAKE FOREST TOWNSHIP, WAKE COUNTY, NORTH CAROLINA

CD XX-XX

NORTH CAROLINA PROFESSIONAL SEAL 22630 ENGINEER WILLIAM T. O'DANIEL
NOT VALID WITHOUT ORIGINAL SEAL

REVISIONS

NO. DATE

PLAN INFORMATION

PROJECT NO.	AWH-20000
FILENAME	AWH20000-CD-PKG-02-EC3
CHECKED BY	.
DRAWN BY	.
SCALE	N.T.S.
DATE	10. 27. 2022

SHEET

EROSION CONTROL DETAILS

C6.03

M:\Projects\AWH\AWH-20000\04-Production\Engineering\The Point North\Current Drawings\AWH20000-North-EC3.dwg, 10/27/2022 8:50:03 AM, Williams, 1:1

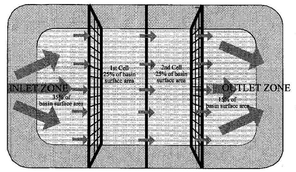

PLAN VIEW

NOTES:
1. BAFFLE MATERIAL SHOULD BE SECURED AT THE BOTTOM AND SIDES USING STAPLES OR BY TRENCHING AS FOR SILT FENCE.
2. MOST OF THE SEDIMENT WILL ACCUMULATE IN THE 1ST BAY, WHICH SHOULD BE READILY ACCESSIBLE FOR MAINTENANCE.
3. PROVIDE 3 BAFFLES (USE TWO IF LESS THAN 20 FEET IN LENGTH). PROVIDE 5 BAFFLES FOR DRAINAGE AREAS GREATER THAN 10 ACRES.
4. BAFFLE SHALL BE 700 G/M2 COIR EROSION BLANKET.
5. TOPS OF BAFFLES SHOULD BE 2 INCHES LOWER THAN THE TOP OF THE BERMS
6. INSPECT BAFFLES FOR REPAIR ONCE A WEEK AND AFTER EACH RAINFALL.

CROSS SECTION

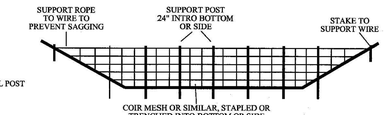

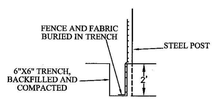

SECTION VIEW AT OPENING

WAKE COUNTY NORTH CAROLINA

EFFECTIVE: 01/31/08

STANDARD BAFFLES DETAIL

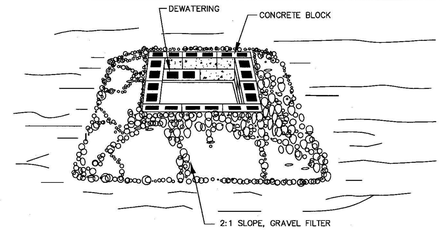

CONSTRUCTION SPECIFICATIONS

1. LAY ONE BLOCK ON EACH SIDE OF THE STRUCTURE ON ITS SIDE IN THE BOTTOM ROW TO ALLOW POOL DRAINAGE. THE FOUNDATION SHOULD BE EXCAVATED AT LEAST 2 INCHES BELOW THE CREST OF THE STORM DRAIN. PLACE THE BOTTOM ROW OF BLOCKS AGAINST THE EDGE OF THE STORM DRAIN FOR LATERAL SUPPORT AND TO AVOID WASHOUTS WHEN OVERFLOW OCCURS. IF NEEDED, GIVE LATERAL SUPPORT TO SUBSEQUENT ROWS BY PLACING 2x4 WOOD STUDS THROUGH BLOCK OPENINGS.
2. CAREFULLY FIT HARDWARE CLOTH OR COMPARABLE WIRE MESH WITH 1/2 INCH OPENINGS OVER ALL BLOCK OPENINGS TO HOLD GRAVEL IN PLACE.
3. USE CLEAN GRAVEL, 3/4 TO 1/2 INCH IN DIAMETER, PLACED 2 INCHES BELOW THE TOP OF THE BLOCK ON A 2:1 SLOPE OR FLATTER AND SMOOTH IT TO AN EVEN GRADE. DOT #57 WASHED STONE IS RECOMMENDED.

MAINTENANCE: INSPECT INLET PROTECTION AND REMOVE SEDIMENT AFTER EACH RAIN EVENT. GRAVEL SHOULD BE REPLACED AND REPAIRS MADE AS NEEDED.

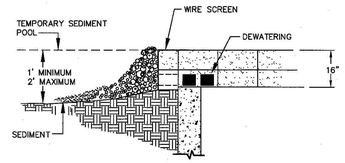

WAKE COUNTY NORTH CAROLINA

EFFECTIVE: 01/31/08

STANDARD BLOCK & GRAVEL DROP INLET PROTECTION

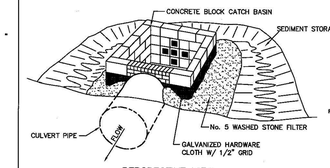

PERSPECTIVE VIEW

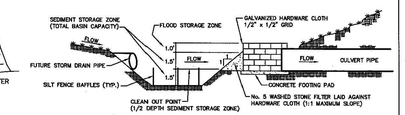

SECTION VIEW

USE OF CATCH BASIN RISER/FILTER ON FILL SITES

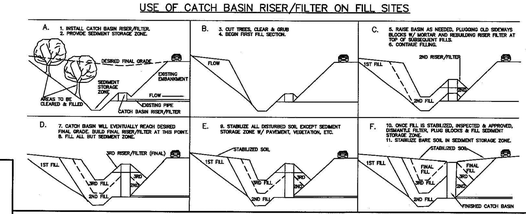

WAKE COUNTY NORTH CAROLINA

EFFECTIVE: 01/31/08

STANDARD CATCH BASIN RISER/FILTER

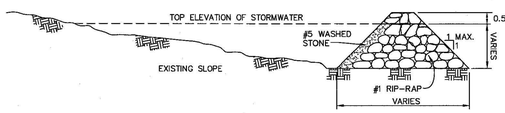

SIDE VIEW

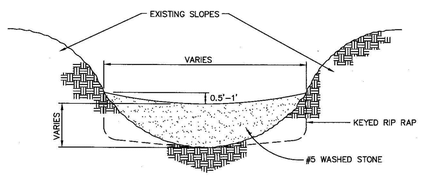

FRONT VIEW

CONSTRUCTION NOTES:

HEIGHT & WIDTH DETERMINED BY EXISTING TOPOGRAPHY AND SEDIMENT STORAGE REQUIRED.

KEY RIP RAP INTO THE DAM FOR STABILIZATION.

STEP SEQUENCE

NOTE: REMOVE SEDIMENT ACCUMULATION FROM BEHIND CHECK DAMS TO PREVENT DAMAGE TO CHANNEL VEGETATION. FLOW SHOULD BE MAINTAINED THROUGH THE DAM.

WAKE COUNTY NORTH CAROLINA

EFFECTIVE: 01/31/08

STANDARD CHECK DAM

NOTES:

1. DIVERSION TO BE USED UPSLOPE OF A CONSTRUCTION SITE TO PREVENT STORM RUNOFF FROM ENTERING THE DISTURBED AREA.
2. IMMEDIATELY LINE AND STABILIZE BEFORE ANY DOWNSLOPE GRADING BEGINS (STABILIZATION MUST OCCUR BEFORE ISSUANCE OF A CERTIFICATE OF COMPLIANCE). STABILIZATION METHOD IS BASED ON VELOCITY OF OFFSITE DRAINAGE.
3. DIVERSIONS SHOULD ONLY BE USED FOR DRAINAGES 5 ACRES OR LESS.
4. ANY SEDIMENT LADEN WATER PRIOR TO STABILIZATION OF THE DIVERSION MUST BE DIVERTED INTO AN APPROVED EROSION AND SEDIMENT CONTROL BMP. CLEAN WATER SHOULD EMPTY INTO AN APPROVED OUTLET DEVICE.

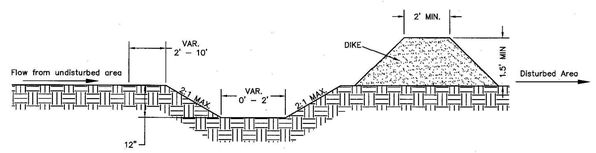

CROSS SECTIONAL VIEW

WAKE COUNTY NORTH CAROLINA

EFFECTIVE: 01/31/08

STANDARD CLEAN WATER DIVERSION

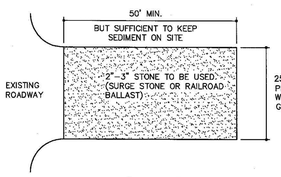

PLAN VIEW

NOTES:

1. PUT SILT FENCE OR TREE PROTECTION FENCE UP TO ENSURE CONSTRUCTION ENTRANCE IS USED.
2. IF CONSTRUCTION ON THE SITES ARE SUCH THAT THE MUD IS NOT REMOVED BY THE VEHICLE TRAVELING OVER THE STONE, THEN THE TIRES OF THE VEHICLES MUST BE WASHED BEFORE ENTERING THE PUBLIC ROAD.
3. MAINTAIN GRAVEL PAD IN A CONDITION TO PREVENT MUD OR SEDIMENT FROM LEAVING CONSTRUCTION SITE. ENTRANCE WILL REQUIRE PERIODIC REMOVAL OF SEDIMENT-LADEN STONE AND REPLACEMENT WITH FRESH STONE.

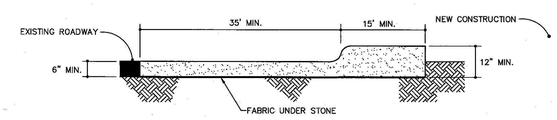

CROSS SECTION

WAKE COUNTY NORTH CAROLINA

EFFECTIVE: 01/31/08

STANDARD CONSTRUCTION ENTRANCE

NOTES:

1. TEMPORARY DIVERSION DITCH TO BE USED TO INTERCEPT FLOW AND/OR DIVERT TO A SEDIMENT CONTROL MEASURE OR BMP.
2. SILT SHALL BE REMOVED WHEN DITCH IS ONE-HALF FULL.
3. DITCH SHALL BE RECONSTRUCTED WHEN DAMAGED BY EQUIPMENT OR COVERED BY FILL.
4. STABILIZE DIVERSION DITCH BERM WITH TEMPORARY SEEDING, MULCH WITH TAC, AND/OR EROSION CONTROL NETTING.

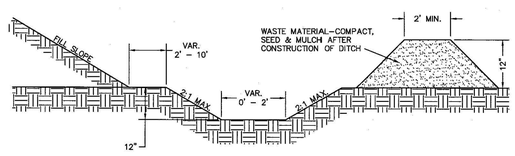

CROSS SECTIONAL VIEW

WAKE COUNTY NORTH CAROLINA

EFFECTIVE: 01/31/08

STANDARD TEMPORARY DIVERSION DITCH

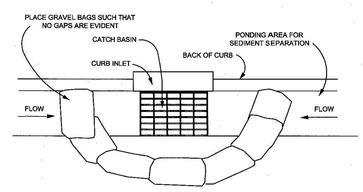

PLAN VIEW

NOTES:

1. PLACE GRAVEL BAG BARRIER ON GENTLY SLOPING STREET, WHERE WATER CAN POND AND ALLOW SEDIMENT TO SEPARATE FROM RUNNOFF.
2. USE SAND BAGS OF WOVEN GEOTEXTILE FABRIC (NOT BURLAP) AND FILL WITH ¾ INCH (OR SMALLER) GRAVEL. BAGS MUST BE LAYERED SUCH THAT NO GAPS ARE EVIDENT.
3. INSPECT BARRIERS AND REMOVE SEDIMENT AFTER EACH STORM EVENT. SEDIMENT AND GRAVEL MUST BE REMOVED FROM THE TRAVELED WAY IMMEDIATELY.
4. WHEN INSTALLING CURB INLET PROTECTION DEVICES, **NEVER** BLOCK THE CURB INLET.

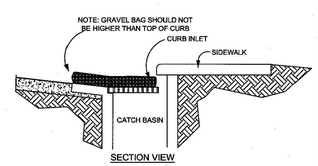

SECTION VIEW

WAKE COUNTY NORTH CAROLINA

EFFECTIVE: 01/31/08

STANDARD GRAVEL BAG CURB INLET PROTECTION

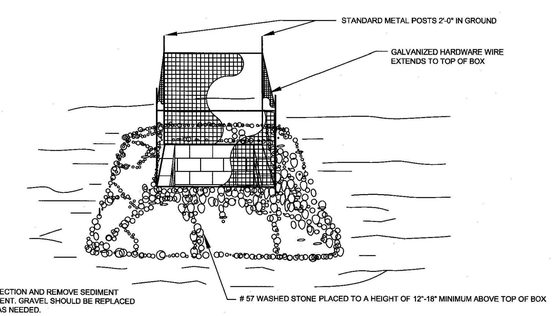

NOTE:

1. INSPECT INLET PROTECTION AND REMOVE SEDIMENT AFTER EACH RAIN EVENT. GRAVEL SHOULD BE REPLACED AND REPAIRS MADE AS NEEDED.

WAKE COUNTY NORTH CAROLINA

EFFECTIVE: 01/31/08

STANDARD GRAVEL YARD INLET PROTECTION

FINAL DRAWING - NOT RELEASED FOR CONSTRUCTION

MCADAMS

The John R. McAdams Company, Inc.
2905 Meridian Parkway
Durham, NC 27713

phone 919. 361. 5000
fax 919. 361. 2269
license number: C-0293, C-187

www.mcadamsco.com

CLIENT

ASHTON WOODS
5711 SIX FORKS ROAD, SUITE 300
RALEIGH, NORTH CAROLINA 27609

ASHTON WOODS

THE POINT PHASES 11-13

CONSTRUCTION DRAWINGS
EAST YOUNG STREET
TOWN OF ROLESVILLE, WAKE FOREST TOWNSHIP, WAKE COUNTY, NORTH CAROLINA

CD XX-XX

NORTH CAROLINA PROFESSIONAL SEAL 22630 ENGINEER WILLIAM T. O'DANIEL

NOT FOR CONSTRUCTION

REVISIONS

NO. DATE

PLAN INFORMATION

PROJECT NO.	AWH-20000
FILENAME	AWH20000-CD-PKG-02-EC3
CHECKED BY	.
DRAWN BY	.
SCALE	N.T.S.
DATE	10. 27. 2022

SHEET

EROSION CONTROL DETAILS

C6.04

M:\Projects\AWH\AWH-20000\04-Production\Engineering\The Point North\Current Drawings\AWH20000-North-EC3.dwg, 10/27/2022 8:50:19 AM, Williams, 1:1

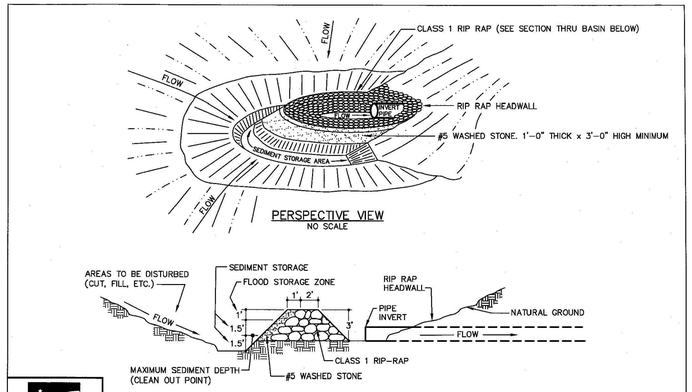

WAKE COUNTY NORTH CAROLINA

EFFECTIVE: 01/31/08

STANDARD HORSESHOE INLET PROTECTION

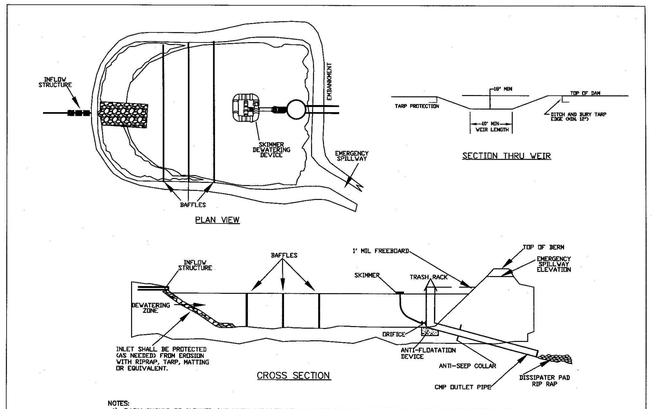

NOTES:
1) BASIN SHOULD BE CLEANED OUT WHEN CAPACITY REACHES AN ELEVATION REPRESENTING THAT THE BASIN IS HALF-FULL.
2) THE TARP USED TO PROTECT THE WEIR SHALL BE THE WIDTH SPECIFIED. THE LENGTH OF THE TARP SHALL BE ACCORDING TO AVAILABLE SUPPLY. IF MULTIPLE TARPS ARE TO BE USED, THEN TARPS SHALL BE OVERLAPPED AT LEAST 12". THE UPSTREAM 12" TARP SHALL OVERLAP THE DOWNSTREAM TARP. THE TARP SHALL BE 50 MIL. HEAVY DUTY SILVER TARPAULINS OR EQUIVALENT FOR U.V. RESISTANCE.
3) PROVIDE A MINIMUM OF THREE POROUS BAFFLES TO EVENLY DISTRIBUTE FLOW ACROSS THE BASIN, REDUCING TURBULENCE.
4) BAFFLE MATERIAL MUST BE SECURED AT THE BOTTOM AND SIDES USING STAPLES OR BY TRENCHING AS FOR A SILT FENCE.
5) MOST OF THE SEDIMENT WILL ACCUMULATE IN THE FIRST BAY, SO THIS SHOULD BE READILY AVAILABLE FOR MAINTENANCE.
6) DURING THE CONSTRUCTION PHASE OF THE PROJECT, PERMANENT STORMWATER RISER SHALL ONLY DEWATER FROM THE TOP OF PIPE.
7) POND SHALL NOT BE CONVERTED FOR STORMWATER USE UNTIL APPROVED BY ENVIRONMENTAL ENGINEER.

WAKE COUNTY NORTH CAROLINA

EFFECTIVE: 01/31/08

STANDARD SKIMMER ATTACHED TO PERMANENT RISER

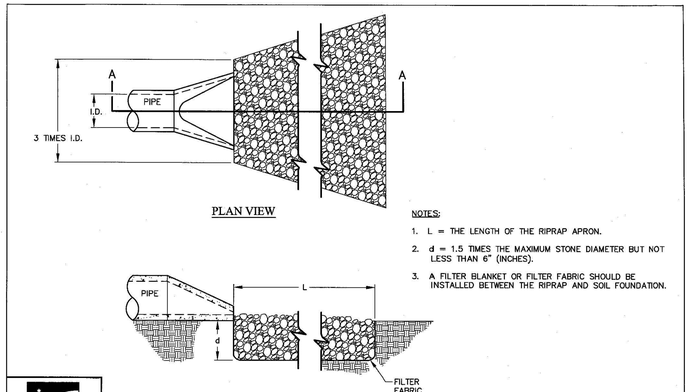

NOTES:
1. L = THE LENGTH OF THE RIPRAP APRON.
2. d = 1.5 TIMES THE MAXIMUM STONE DIAMETER BUT NOT LESS THAN 6" (INCHES).
3. A FILTER BLANKET OR FILTER FABRIC SHOULD BE INSTALLED BETWEEN THE RIPRAP AND SOIL FOUNDATION.

WAKE COUNTY NORTH CAROLINA

EFFECTIVE: 01/31/08

STANDARD PIPE OUTLET TO FLAT AREA
NO WELL-DEFINED CHANNEL

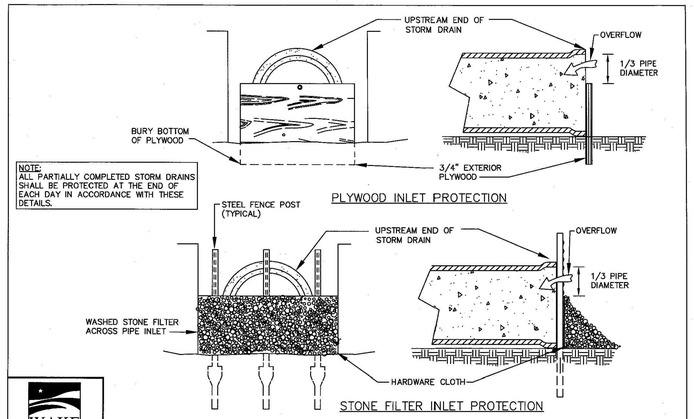

NOTE:
ALL PARTIALLY COMPLETED STORM DRAINS SHALL BE PROTECTED AT THE END OF EACH DAY IN ACCORDANCE WITH THESE DETAILS.

WAKE COUNTY NORTH CAROLINA

EFFECTIVE: 01/31/08

STANDARD PIPE INLET PROTECTION (PLYWOOD & STONE)

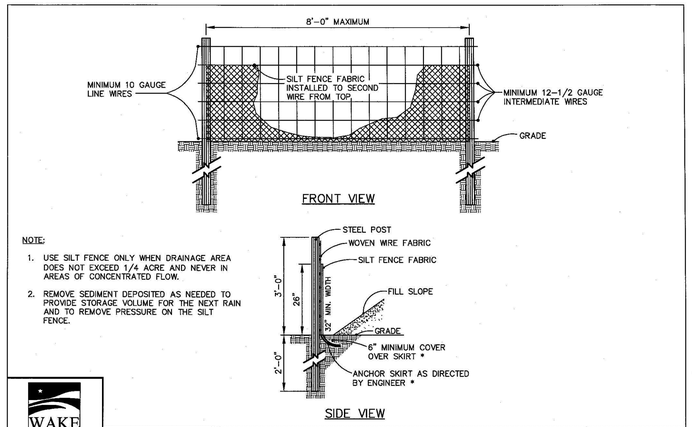

NOTE:
1. USE SILT FENCE ONLY WHEN DRAINAGE AREA DOES NOT EXCEED 1/4 ACRE AND NEVER IN AREAS OF CONCENTRATED FLOW.
2. REMOVE SEDIMENT DEPOSITED AS NEEDED TO PROVIDE STORAGE VOLUME FOR THE NEXT RAIN AND TO REMOVE PRESSURE ON THE SILT FENCE.

WAKE COUNTY NORTH CAROLINA

EFFECTIVE: 01/31/08

STANDARD TEMPORARY SILT FENCE

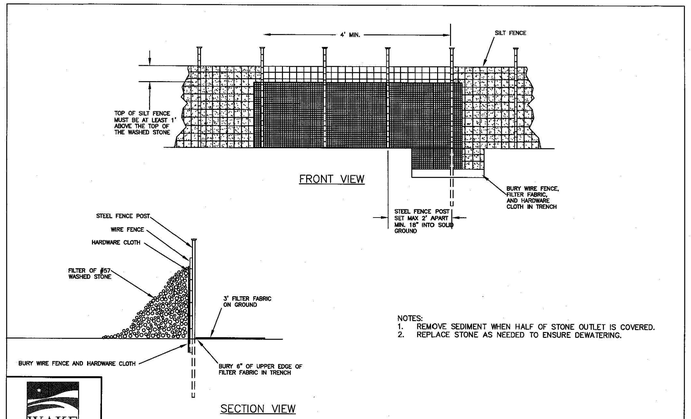

NOTES:
1. REMOVE SEDIMENT WHEN HALF OF STONE OUTLET IS COVERED.
2. REPLACE STONE AS NEEDED TO ENSURE DEWATERING.

WAKE COUNTY NORTH CAROLINA

EFFECTIVE: 01/31/08

STANDARD SILT FENCE OUTLET

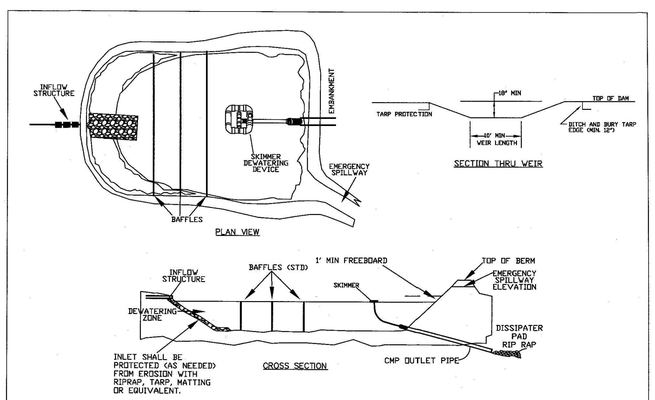

NOTES:
1) BASIN SHOULD BE CLEANED OUT WHEN CAPACITY REACHES AN ELEVATION REPRESENTING THAT THE BASIN IS HALF-FULL.
2) THE TARP USED TO PROTECT THE WEIR SHALL BE THE WIDTH SPECIFIED. THE LENGTH OF THE TARP SHALL BE ACCORDING TO AVAILABLE SUPPLY. IF MULTIPLE TARPS ARE TO BE USED, THEN TARPS SHALL BE OVERLAPPED AT LEAST 12". THE UPSTREAM 12" TARP SHALL OVERLAP THE DOWNSTREAM TARP. THE TARP SHALL BE 50 MIL. HEAVY DUTY SILVER TARPAULINS OR EQUIVALENT FOR U.V. RESISTANCE.
3) PROVIDE A MINIMUM OF THREE POROUS BAFFLES TO EVENLY DISTRIBUTE FLOW ACROSS THE BASIN, REDUCING TURBULENCE.
4) BAFFLE MATERIAL MUST BE SECURED AT THE BOTTOM AND SIDES USING STAPLES OR BY TRENCHING AS FOR A SILT FENCE.
5) MOST OF THE SEDIMENT WILL ACCUMULATE IN THE FIRST BAY, SO THIS SHOULD BE READILY AVAILABLE FOR MAINTENANCE.
6) DURING THE CONSTRUCTION PHASE OF THE PROJECT, PERMANENT STORMWATER RISER SHALL ONLY DEWATER FROM THE TOP OF PIPE.
7) POND SHALL NOT BE CONVERTED FOR STORMWATER USE UNTIL APPROVED BY ENVIRONMENTAL ENGINEER.

WAKE COUNTY NORTH CAROLINA

EFFECTIVE: 01/31/08

STANDARD SKIMMER BASIN

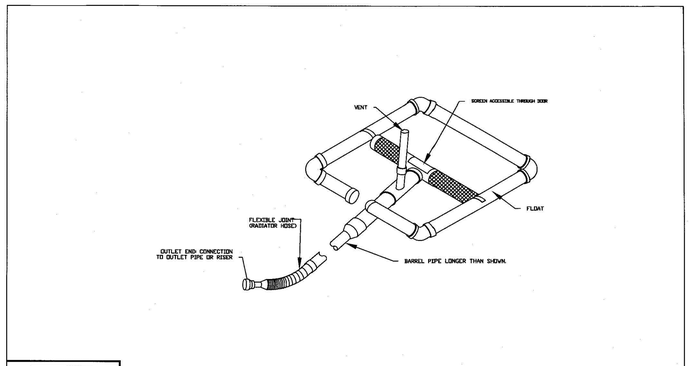

WAKE COUNTY NORTH CAROLINA

EFFECTIVE: 01/31/08

STANDARD SKIMMER DETAIL

NOTES:
1. CONSTRUCT THE ENTRANCE TO THE SLOPE DRAIN OF A STANDARD FLARED-END SECTION OF PIPE WITH A MINIMUM 6-INCH METAL TOE PLATE (CROSS-SECTION VIEW). MAKE ALL FITTINGS WATERTIGHT. A STANDARD T-SECTION FITTING MAY ALSO BE USED AT THE INLET.
2. USE AN EARTHEN DIVERSION TO DIRECT SURFACE RUNOFF INTO THE TEMPORARY SLOPE DRAIN. MAKE THE HEIGHT OF THE BERM OVER THE DRAIN CONDUIT A MINIMUM OF 1.5 FT AND AT LEAST 6 INCHES HIGHER THAN THE ADJOINING BERM ON EITHER SIDE. THE LOWEST POINT OF THE DIVERSION BERM SHOULD BE A MINIMUM OF 1 FT ABOVE THE TOP OF THE DRAIN SO THAT DESIGN FLOW CAN FREELY ENTER THE PIPE.
3. PROTECT THE OUTLET OF THE SLOPE DRAIN FROM EROSION WITH RIPRAP DISSIPATOR.

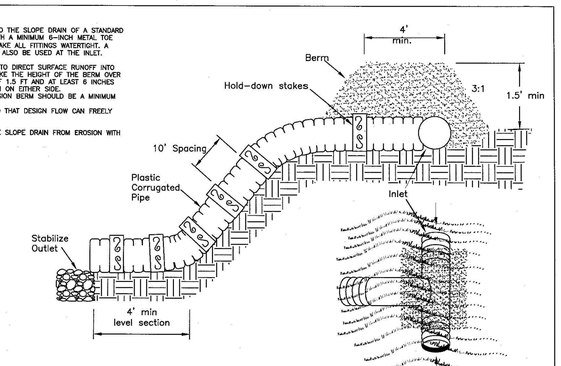

WAKE COUNTY NORTH CAROLINA

EFFECTIVE: 01/31/08

STANDARD TEMPORARY SLOPE DRAIN

FINAL DRAWING - NOT RELEASED FOR CONSTRUCTION

McADAMS
The John R. McAdams Company, Inc.
2905 Meridian Parkway
Durham, NC 27713

phone 919. 361. 5000
fax 919. 361. 2269
license number: C-0293, C-187

www.mcadamsco.com

CLIENT

ASHTON WOODS
5711 SIX FORKS ROAD, SUITE 300
RALEIGH, NORTH CAROLINA 27609

ASHTON WOODS

THE POINT PHASES 11-13

CONSTRUCTION DRAWINGS
EAST YOUNG STREET
TOWN OF ROLESVILLE, WAKE FOREST TOWNSHIP,
WAKE COUNTY, NORTH CAROLINA

CD XX-XX

NORTH CAROLINA PROFESSIONAL SEAL 22630 ENGINEER WILLIAM T. O'DANIEL
NOT FOR CONSTRUCTION

REVISIONS

NO. DATE

PLAN INFORMATION

PROJECT NO.	AWH-20000
FILENAME	AWH20000-CD-PKG-02-EC3
CHECKED BY	.
DRAWN BY	.
SCALE	N.T.S.
DATE	10. 27. 2022

SHEET

EROSION CONTROL DETAILS

C6.05

M:\Projects\AWH\AWH-20000\04-Production\Engineering\The Point North\Current Drawings\AWH20000-North-EC3.dwg, 10/27/2022 8:50:32 AM, Williams, 1:1
M:\Projects\AWH\AWH-20000\04-Production\Engineering\The Point North\Current Drawings\AWH20000-North-EC3.dwg, 10/27/2022 8:50:35 AM, Sherrill Williams

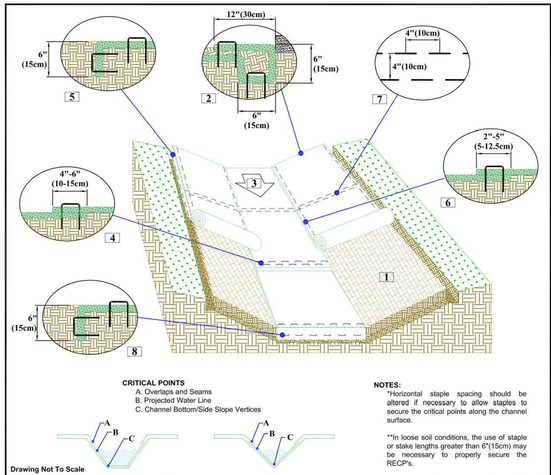

CHANNEL INSTALLATION DETAIL

1. Prepare soil before installing rolled erosion control products (RECPs), including any necessary application of lime, fertilizer, and seed.
2. Begin at the top of the channel by anchoring the RECPs in a 6"(15cm) deep X 6"(15cm) wide trench with approximately 12"(30cm) of RECPs extended beyond the up-slope portion of the trench. Use ShoreMax mat at the channel/culvert outlet as supplemental scour protection as needed. Anchor the RECPs with a row of staples/stakes approximately 12"(30cm) apart in the bottom of the trench. Backfill and compact the trench after stapling. Apply seed to the compacted soil and fold the remaining 12"(30cm) portion of RECPs back over the seed and compacted soil. Secure RECPs over compacted soil with a row of staples/stakes spaced approximately 12" apart across the width of the RECPs.
3. Roll center RECPs in direction of water flow in bottom of channel. RECPs will unroll with appropriate side against the soil surface. All RECPs must be securely fastened to soil surface by placing staples/stakes in appropriate locations as shown in the staple pattern guide.
4. Place consecutive RECPs end-over-end (Shingle style) with a 4"-6" overlap. Use a double row of staples staggered 4" apart and 4" on center to secure RECPs.
5. Full length edge of RECPs at top of side slopes must be anchored with a row of staples/stakes approximately 12"(30cm) apart in a 6"(15cm) deep X 6"(15cm) wide trench. Backfill and compact the trench after stapling.
6. Adjacent RECPs must be overlapped approximately 2"-5" (5-12.5cm) (Depending on RECPs type) and stapled.
7. In high flow channel applications a staple check slot is recommended at 30 to 40 foot (9 -12m) intervals. Use a double row of staples staggered 4"(10cm) apart and 4"(10cm) on center over entire width of the channel.
8. The terminal end of the RECPs must be anchored with a row of staples/stakes approximately 12" (30cm) apart in a 6"(15cm) deep X 6"(15cm) wide trench. Backfill and compact the trench after stapling.

NOTES:
*Horizontal staple spacing should be altered if necessary to allow staples to secure the critical points along the channel surface.

**In loose soil conditions, the use of staple or stake lengths greater than 6"(15cm) may be necessary to properly secure the RECP's.

NORTH AMERICAN GREEN
5401 St. Wendel - Cynthiana Rd. Poseyville, IN 47633 PH: 800-722-2040 www.nagreen.com

Disclaimer:
The information presented herein is general design information only. For specific applications, consult an independent professional for further design guidance.

Drawn on: 5-4-17

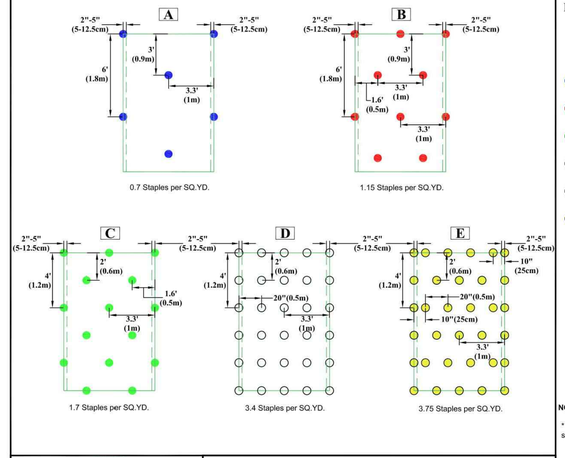

STAPLE PATTERN GUIDE

- 4:1 Slopes (A)
- 3:1 Slopes (B)
- 2:1 Slopes (C)
- 1:1 & Steeper Slopes (D)
- Medium/High Flow Channel (D)
- High Flow Channel And Shoreline (E)

NOTES:
* Use ECMDS® for more accurate staple pattern selection.

Drawing Not To Scale

NORTH AMERICAN GREEN
5401 St. Wendel - Cynthiana Rd. Poseyville, IN 47633 PH: 800-722-2040 www.nagreen.com

Disclaimer:
The information presented herein is general design information only. For specific applications, consult an independent professional for further design guidance.

Drawn on: 5-4-17

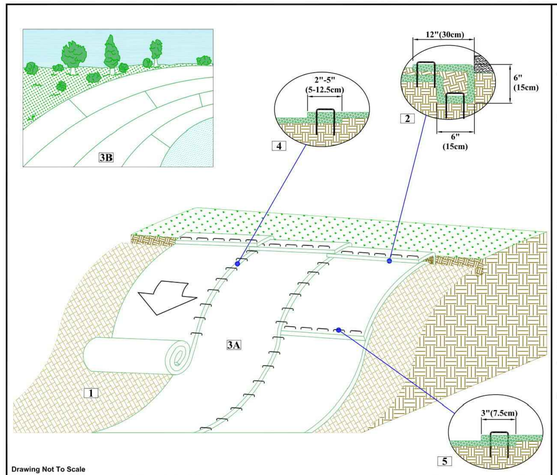

SLOPE INSTALLATION DETAIL

1. Prepare soil before installing rolled erosion control products (RECPs), including any necessary application of lime, fertilizer, and seed.
2. Begin at the top of the slope by anchoring the RECPs in a 6"(15cm) deep X 6"(15cm) wide trench with approximately 12" (30cm) of RECPs extended beyond the up-slope portion of the trench. Anchor the RECPs with a row of staples/stakes approximately 12" (30cm) apart in the bottom of the trench. Backfill and compact the trench after stapling. Apply seed to the compacted soil and fold the remaining 12"(30cm) portion of RECPs back over the seed and compacted soil. Secure RECPs over compacted soil with a row of staples/stakes spaced approximately 12"(30cm) apart across the width of the RECPs.
3. Roll the RECPs (A) down or (B) horizontally across the slope. RECPs will unroll with appropriate side against the soil surface. All RECPs must be securely fastened to soil surface by placing staples/stakes in appropriate locations as shown in the staple pattern guide.
4. The edges of parallel RECPs must be stapled with approximately 2" - 5" (5-12.5cm) overlap depending on the RECPs type.
5. Consecutive RECPs spliced down the slope must be end over end (Shingle style) with an approximate 3"(7.5cm) overlap. Staple through overlapped area, approximately 12"(30cm) apart across entire RECPs width.

*NOTE:
In loose soil conditions, the use of staple or stake lengths greater than 6"(15cm) may be necessary to properly secure the RECP's.

NORTH AMERICAN GREEN
5401 St. Wendel - Cynthiana Rd. Poseyville, IN 47633 PH: 800-722-2040 www.nagreen.com

Disclaimer:
The information presented herein is general design information only. For specific applications, consult an independent professional for further design guidance.

Drawn on: 5-4-17

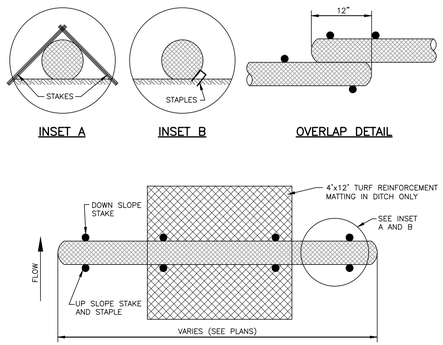

NOTES:
1. USE MINIMUM 12" DIAMETER WATTLE (LARGER WATTLES MAY BE REQUIRED TO KEEP SEDIMENT ON SITE).
2. USE 2' WOODEN STAKES WITH A 2" NOMINAL CROSS SECTION.
3. INSTALL A MINIMUM OF TWO UP SLOPE STAKES AND 4 DOWN SLOPE STAKES AT AN ANGLE TO WEDGE WATTLE TO EXISTING GRADE.
4. PROVIDE STAPLES OF 0.125" DIAMETER STEEL WIRE FORMED INTO A U SHAPE NOT LESS THAN 6" IN LENGTH.
5. INSTALL STAPLES APPROXIMATELY EVERY 1 LINEAR FOOT ON THE UP SLOPE SIDE OF THE WATTLE AND AT EACH END TO SECURE IT TO THE SOIL.

MAINTENANCE:
1. WATTLES SHOULD BE CHECKED AND CLEARED OF ACCUMULATED DEBRIS AND SEDIMENT.
2. REPLACE AS REQUIRED.

TEMPORARY WATTLE DETAIL
N.T.S.

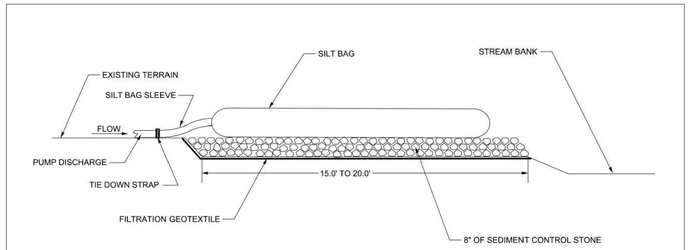

NOTES:
1. USE NO. 5 OR NO. 57 STONE FOR SEDIMENT CONTROL STONE.
2. PROVIDE STABILIZED OUTLET TO STREAM BANK.
3. WOOD PALLETS MAY BE USED IN LIEU OF STONE AND GEOTEXTILE AS DIRECTED. A SUFFICIENT NUMBER OF PALLETS MUST BE PROVIDED TO ELEVATE THE ENTIRE SPECIAL STILLING BASIN ABOVE NATURAL GROUND.
4. THE SIZE AND NUMBER OF SILT BAGS SHOULD BE BASED ON THE DEWATERING PUMP AND MANUFACTURER RECOMMENDATIONS.
5. TIGHTLY SECURE THE PUMP DISCHARGE TO THE SILT BAG SLEEVE WITH A STRAP OR SIMILAR DEVICE TO PREVENT WATER/SEDIMENT FROM LEAKING WITHOUT TREATMENT.
6. CONTROL PUMPING RATE TO PREVENT EXCESSIVE PRESSURE WITHIN THE SILT BAG IN ACCORDANCE WITH THE MANUFACTURER RECOMMENDATIONS. AS THE BAG FILLS WITHIN SEDIMENT, REDUCE THE PUMP RATE.
7. REPLACE THE SILT BAG WHEN ONE HALF (1/2) FULL OF SEDIMENT.
8. SILT BAG DEVICE MUST BE ≥ 50FT FROM THE TOP OF THE STREAM BANK AND WATER MUST BE DISCHARGED IN A DIFFUSE MANNER.

SILT BAG — NOT TO SCALE

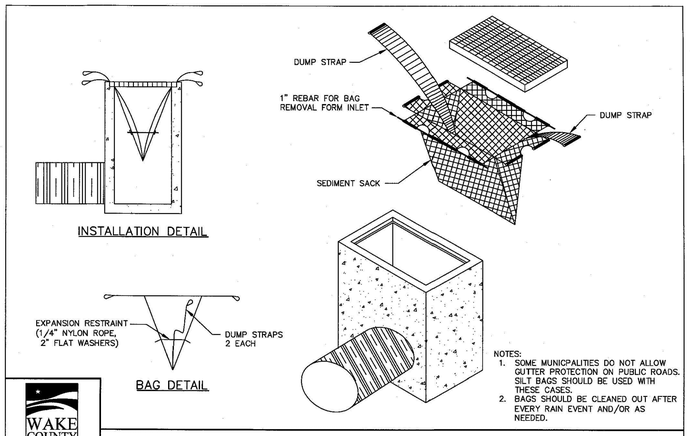

NOTES:
1. SOME MUNICPALITIES DO NOT ALLOW GUTTER PROTECTION ON PUBLIC ROADS. SILT BAGS SHOULD BE USED WITH THESE CASES.
2. BAGS SHOULD BE CLEANED OUT AFTER EVERY RAIN EVENT AND/OR AS NEEDED.

WAKE COUNTY NORTH CAROLINA
EFFECTIVE: 01/31/08

STANDARD SILT BAG - INLET SEDIMENT CONTROL DEVICE

TEMPORARY SEDIMENT TRAP DESIGN CRITERIA	
DRAINAGE AREA (ACRES)	< 1 AC.
MIN. LENGTH TO WIDTH RATIO	2:1
MIN. VOLUME REQUIRED	1800 (CU. FT. PER AC. DISTURBED)

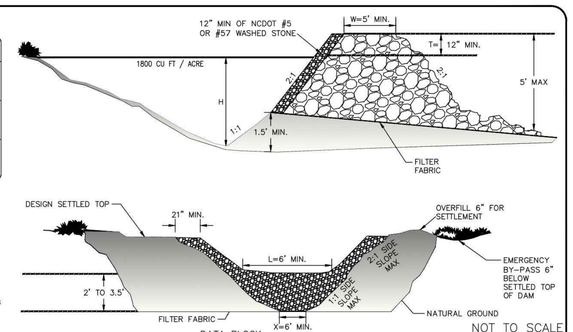

NOTE:
PLEASE REFER TO NCESCPCM SECTION #6.60 FOR ADDITIONAL DESIGN SPECIFICATIONS REGARDING TEMPORARY SEDIMENT TRAPS.

DATA BLOCK — NOT TO SCALE

TRAP NO.	DRAINAGE AREA (ACRES)	DENUDED AREA (ACRES)	Q_{10} (cfs)	TRAP VOLUME REQUIRED (CUBIC FT.)	TRAP VOLUME PROVIDED (CUBIC FT.)	CLEANOUT DEPTH (FT.) H/2	H (FEET)	L (FEET)	T (FEET)	W (FEET)	Y (FEET)
RB-1	1	2.45	7.25	4410	5622	0.75	1.5	10	1	5	6
RB-2	0.15	0.15	0.44	270	280	1	2	6	1	5	6
RB-3	0.09	0.09	0.27	162	180	1	2	6	1	5	6
RB-4	0.14	0.14	0.41	252	260	1	2	6	1	5	6
RB-5	0.10	0.10	0.30	180	180	1	2	6	1	5	6

RIP RAP BASIN

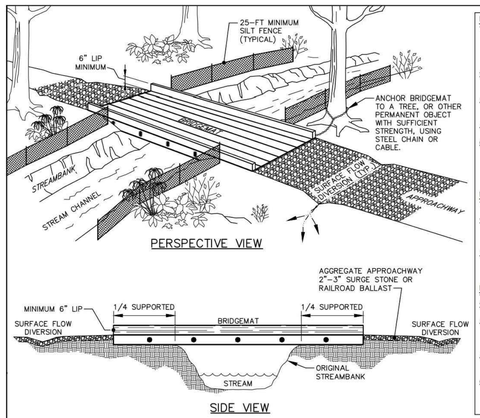

INSTALLATION NOTES:
1. REFER TO "NORTH CAROLINA DIVISION OF FOREST RESOURCES" LITERATURE, INSTALLATION MAINTENANCE GUIDELINES, & "NORTH CAROLINA FORESTRY BMP MANUAL-2006".
2. INSTALL WATER DIVERSION DEVICES (WATER BARS, TURNOUTS, BROAD-BASED DIPS, ETC.) ON BOTH SIDES OF THE MATS.
3. STABILIZE EXPOSED MINERAL SOIL WITH TREE TOPS OR BRUSH DURING MAT INSTALLATION, AND SEEDING/MULCH AFTER MAT REMOVAL.
4. INSTALL MATS TO CREATE A MINIMUM TEN FOOT BRIDGE WIDTH.
5. INCLUDE COARSE AGGREGATE ON THE APPROACHWAY FOR A MINIMUM OF 25 FEET AND SILT FENCE ALONG STREAMBANKS ADJACENT TO CROSSING FOR A MINIMUM OF 25 FEET.

MAINTENANCE NOTES:
1. KEEP MATS' SURFACE FREE OF MINERAL SOIL AND DEBRIS THAT COULD ENTER STREAM.
2. PERIODICALLY CHECK MAT HARDWARE; RETIGHTEN NUTS & CABLE CLAMPS AS NECESSARY TO MAINTAIN BRIDGE STRENGTH AND INTEGRITY.
3. IMMEDIATELY REMOVE ANY DEBRIS WHICH ENTERS THE STREAM AT THE CROSSING LOCATION.

REMOVAL NOTES:
1. CLEAN OFF BRIDGE SURFACE.
2. REMOVE MATS BY USING MAT CABLE LOOP OR SKIDDER GRAPPLE.
3. PERMANENTLY STABILIZE DISTURBED PORTIONS OF STREAMBANK AND APPROACH ROADS WITH PERENNIAL GRASSES/MULCH (OR WETLAND MIX WHEN APPLICABLE).
4. LEAVE APPROPRIATE WATER DIVERSION STRUCTURES IN PLACE ON BOTH SIDES OF STREAM.
5. RESTORE THE STREAM CHANNEL TO ITS ORIGINAL CROSS-SECTION, AND SMOOTH AND APPROPRIATELY STABILIZE ALL DISTURBED AREAS.

STANDARD TEMPORARY STREAM CROSSING OPTION

MCADAMS
The John R. McAdams Company, Inc.
2905 Meridian Parkway
Durham, NC 27713

phone 919. 361. 5000
fax 919. 361. 2269
license number: C-0293, C-187

www.mcadamsco.com

CLIENT
ASHTON WOODS
5711 SIX FORKS ROAD, SUITE 300
RALEIGH, NORTH CAROLINA 27609

ASHTON WOODS

THE POINT PHASES 11-13
CONSTRUCTION DRAWINGS
EAST YOUNG STREET
TOWN OF ROLESVILLE, WAKE FOREST TOWNSHIP, WAKE COUNTY, NORTH CAROLINA

CD XX-XX

NORTH CAROLINA PROFESSIONAL SEAL 22630 ENGINEER WILLIAM T. O'DANIEL
PRELIMINARY NOT FOR CONSTRUCTION

REVISIONS
NO. DATE

PLAN INFORMATION

PROJECT NO.	AWH-20000
FILENAME	AWH20000-CD-PKG-02-EC3
CHECKED BY	.
DRAWN BY	.
SCALE	N.T.S.
DATE	10. 27. 2022

SHEET
EROSION CONTROL DETAILS
C6.06

FINAL DRAWING - NOT RELEASED FOR CONSTRUCTION

M:\Projects\AWH\AWH-20000\04-Production\Engineering\The Point North\Current Drawings\AWH20000-North-EC3.dwg, 10/27/2022 8:50:46 AM, Williams, 1:1

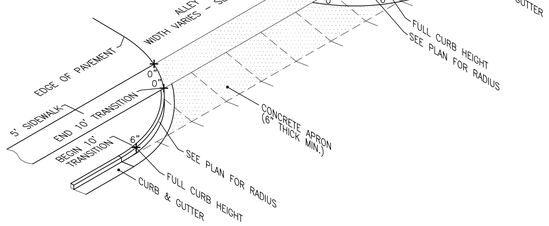

RESIDENTIAL ALLEY ENTRANCE DETAIL

N.T.S.

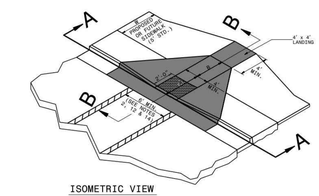

ISOMETRIC VIEW

PAY LIMITS FOR CURB RAMP

NOTES:
1. DETECTABLE WARNING DOMES WILL COVER 2'-0" LENGTH AND FULL WIDTH OF THE RAMP FLOOR AS SHOWN ON THE DETAILS.
2. DETECTABLE WARNING DOMES WILL CONTRAST VISIBILITY WITH ADJOINING SURFACE, EITHER LIGHT-ON-DARK, OR DARK-ON-LIGHT SEQUENCE COVERING THE ENTIRE RAMP.

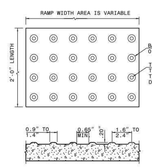

DETECTABLE WARNING DOMES

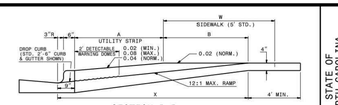

SECTION B-B

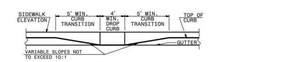

SECTION A-A

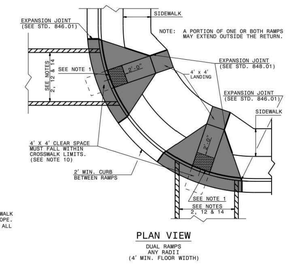

PLAN VIEW

DUAL RAMPS
- ANY RADII
(4' MIN. FLOOR WIDTH)

X	A	W=A+9"	X	B
4'	0.0'	5.8'	5.8'	5.0'*
6'	0.0'	6.8'	6.8'	6.0'**
7'	0.0'	7.8'	7.3'	6.5'**
8'	0.0'	8.8'	7.3'	6.5'**
8'	2.0'	7.8'	7.8'	5.0'
5'	2.5'	8.3'	8.1'	4.0'
5'	3.0'	8.8'	8.3'	4.4'
5'	3.5'	9.3'	8.4'	4.1'
5'	4.0'	9.8'	8.6'	3.8'
5'	4.5'	10.3'	8.7'	3.4'
5'	5.0'	10.8'	8.9'	3.1'

B = X-(A+9")
B = DISTANCE FROM FRONT EDGE OF SIDEWALK TO BACK POINT OF 12:1 (8.33%) SLOPE.
* BACK OF SIDEWALK DROP REQUIRED FOR ALL SIDEWALK SLOPES.
** BACK OF SIDEWALK DROP REQUIRED FOR SIDEWALK SLOPES 0.04.

1-18 STATE OF NORTH CAROLINA DEPT. OF TRANSPORTATION DIVISION OF HIGHWAYS RALEIGH, N.C.

ROADWAY STANDARD DRAWING FOR
CURB RAMP
PROPOSED CURB AND GUTTER

SHEET 1 OF 3
848.05

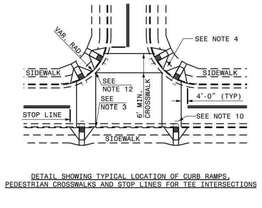

DETAIL SHOWING TYPICAL LOCATION OF CURB RAMPS, PEDESTRIAN CROSSWALKS AND STOP LINES FOR TEE INTERSECTIONS

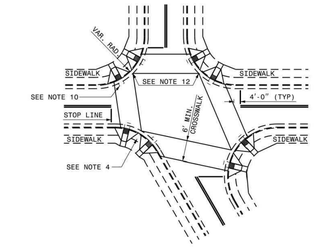

DETAIL SHOWING TYPICAL LOCATION OF CURB RAMPS, PEDESTRIAN CROSSWALKS AND STOP LINES

ROADWAY PLAN SYMBOL
CR
FOR PROPOSED CURB RAMP

PROPOSED CURB RAMP W/ LANDING
PROPOSED OR FUTURE SIDEWALK

ALLOWABLE LOCATIONS
DUAL RAMP RADII.....ANY

1-18 STATE OF NORTH CAROLINA DEPT. OF TRANSPORTATION DIVISION OF HIGHWAYS RALEIGH, N.C.

ROADWAY STANDARD DRAWING FOR
CURB RAMP
PROPOSED CURB AND GUTTER

SHEET 2 OF 3
848.05

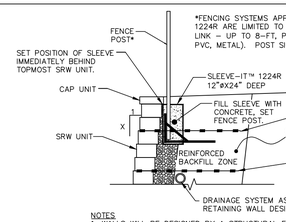

*FENCING SYSTEMS APPROVED FOR USE WITH SLEEVE-IT™ 1224R ARE LIMITED TO THE FOLLOWING HEIGHTS: CHAIN LINK – UP TO 8-FT, PRIVACY – UP TO 6-FT (WOODEN, PVC, METAL). POST SIZE 4"X4" MAX.

NOTES
1. WALLS WILL BE DESIGNED BY A STRUCTURAL ENGINEER.
2. WALL COLOR TO BE EARTH TONE OR GRAY.

INTERLOCKING BLOCK WALL WITH FENCE
(SLEEVE-IT™ OR APPROVED EQUAL)

N.T.S.

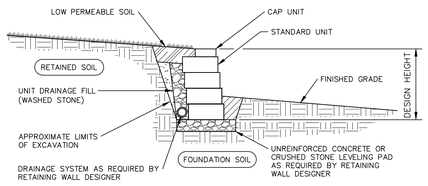

NOTES
1. WALLS WILL BE DESIGNED BY A STRUCTURAL ENGINEER.
2. WALL COLOR TO BE EARTH TONE OR GRAY.

INTERLOCKING BLOCK WALL

N.T.S.

NOTE: CURB STOP SHALL BE SLOTTED, FOR DRAINAGE

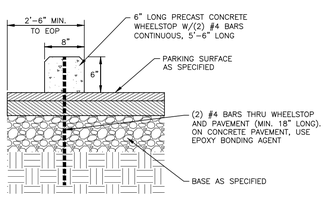

WHEEL STOP

N.T.S.

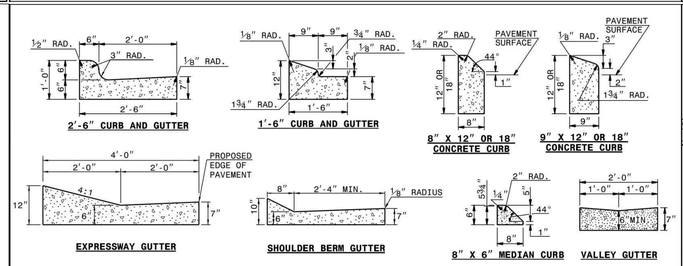

SECTION VIEW OF CURBS OR CURBS AND GUTTERS

GENERAL NOTES:
-PLACE CONTRACTION JOINTS AT 10' INTERVALS, EXCEPT THAT A 15' SPACING MAY BE USED WHEN A MACHINE IS USED OR WHEN SATISFACTORY SUPPORT FOR THE FACE FORM CAN BE OBTAINED WITHOUT THE USE OF TEMPLATES AT 10' INTERVALS.
-JOINT SPACING MAY BE ALTERED IF REQUIRED BY THE ENGINEER.
-CONTRACTION JOINTS MAY BE INSTALLED WITH THE USE OF TEMPLATES OR FORMED BY OTHER APPROVED METHODS. CONSTRUCT NON-TEMPLATE FORMED JOINTS A MIN. OF 1½" DEEP.
-FILL ALL CONSTRUCTION JOINTS, EXCEPT IN 8"x6" MEDIAN CURB, WITH JOINT FILLER AND SEALER.
-SPACE EXPANSION JOINTS AT 90' INTERVALS AND ADJACENT TO ALL RIGID OBJECTS.

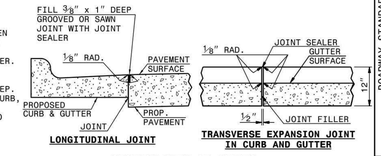

LONGITUDINAL JOINT

TRANSVERSE EXPANSION JOINT IN CURB AND GUTTER

SECTION VIEW OF JOINTS

1-18 STATE OF NORTH CAROLINA DEPT. OF TRANSPORTATION DIVISION OF HIGHWAYS RALEIGH, N.C.

ROADWAY STANDARD DRAWING FOR
CONCRETE CURB, GUTTER AND CURB & GUTTER

SHEET 1 OF 3
846.01

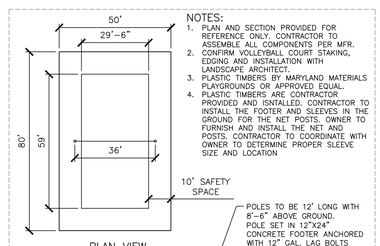

NOTES:
1. PLAN AND SECTION PROVIDED FOR REFERENCE ONLY. CONTRACTOR TO ASSEMBLE ALL COMPONENTS PER MFR.
2. CONFIRM VOLLEYBALL COURT STAKING, EDGING AND INSTALLATION WITH LANDSCAPE ARCHITECT.
3. PLASTIC TIMBERS BY MARYLAND MATERIALS PLAYGROUNDS OR APPROVED EQUAL.
4. PLASTIC TIMBERS ARE CONTRACTOR PROVIDED AND ISNTALLED. CONTRACTOR TO INSTALL THE FOOTER AND SLEEVES IN THE GROUND FOR THE NET POSTS. OWNER TO FURNISH AND INSTALL THE NET AND POSTS. CONTRACTOR TO COORDINATE WITH OWNER TO DETERMINE PROPER SLEEVE SIZE AND LOCATION

PLAN VIEW
N.T.S.

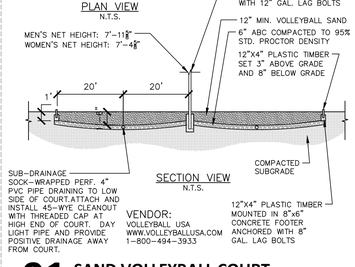

SECTION VIEW
N.T.S.

VENDOR:
VOLLEYBALL USA
WWW.VOLLEYBALLUSA.COM
1-800-494-3933

01 SAND VOLLEYBALL COURT
SCALE: 1/8"=1'-0"

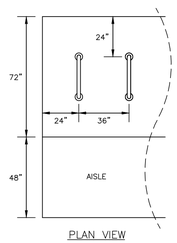

PLAN VIEW

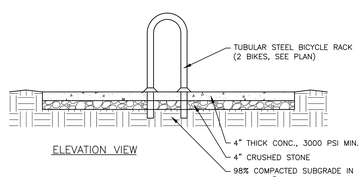

ELEVATION VIEW

BICYCLE RACK

N.T.S.

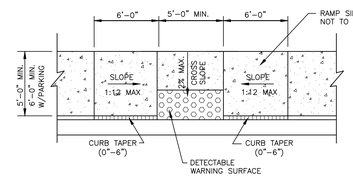

NOTE: RAMP LANDING AREA SHALL RECEIVE A 24" DETECTABLE WARNING SURFACE OF COLOR TO CONTRAST WITH ADJOINING SURFACES PER ICC A117.1-2009 SECT. 705 REQUIREMENTS.

ACCESSIBLE SIDEWALK RAMP

N.T.S.

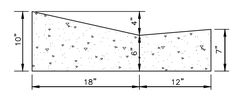

NOTES:
1. 10' MAXIMUM BETWEEN DUMMY JOINTS. 15' MAXIMUM BETWEEN DUMMY JOINTS ON MACHINE POURS.
2. 1/2" EXPANSION JOINT EVERY 50'.
3. 3000 PSI CONCRETE MINIMUM, 4" SLUMP MAXIMUM.
4. LIQUID MEMBRANE CURING COMPOUND SHALL MEET THE REQUIREMENTS OF SECTION 1026-2 OF NCDOT STANDARDS AND SPECIFICATIONS FOR ROADS AND STRUCTURES.
5. ALL CONSTRUCTION JOINTS SHALL BE FILLED WITH FILLER AND SEALER IN ACCORDANCE WITH NCDOT ROADWAY STANDARD DETAIL 846.01. THE JOINT MATERIAL SHALL CONFORM TO SECTION 1028-2 OF THE NCDOT STANDARDS AND SPECIFICATIONS FOR ROADS AND STRUCTURES.
6. REFER TO NCDOT DETAIL 846.01 FOR CURB AND GUTTER SUPERELEVATION RATES.

30" VALLEY TYPE GUTTER

N.T.S.

NOTES:
1. CONSTRUCT THE RAMP SURFACE TO BE STABLE, FIRM, AND SLIP RESISTANT. CONSTRUCT THE CURB RAMP TYPE AS SHOWN IN THE PAVEMENT MARKING PLANS OR AS DIRECTED BY THE ENGINEER.
2. LOCATE CURB RAMPS AND PLACE PEDESTRIAN CROSSWALK MARKINGS AS SHOWN IN THE PAVEMENT MARKING PLANS. WHEN FIELD ADJUSTMENTS REQUIRE MOVING CURB RAMPS OR MARKINGS AS SHOWN, CONTACT THE SIGNING AND DELINEATION UNIT OR LOCATE AS DIRECTED BY THE ENGINEER.
3. COORDINATE THE CURB RAMP AND THE PEDESTRIAN CROSSWALK MARKINGS SO A 4'x4' CLEAR SPACE AT THE BASE OF THE CURB RAMP WILL FALL WITHIN THE PEDESTRIAN CROSSWALK LINES.
4. SET BACK DISTANCE FROM INSIDE CROSSWALK MARKING TO NEAREST EDGE OF TRAVEL LANE IS 4' MINIMUM.
5. REFER TO THE PAVEMENT MARKING PLANS FOR STOP BAR LOCATIONS AT SIGNALIZED INTERSECTIONS. IF A PAVEMENT MARKING PLAN IS NOT PROVIDED, CONTACT THE SIGNAL DESIGN SECTION FOR THE STOP BAR LOCATIONS OR LOCATE AS DIRECTED BY THE ENGINEER.
6. TERMINATE PARKING A MINIMUM OF 20' BACK OF A PEDESTRIAN CROSSWALK.
7. CONSTRUCT CURB RAMPS A MINIMUM OF 4' WIDE.
8. CONSTRUCT THE RUNNING SLOPE OF THE RAMP 8.33% MAXIMUM.
9. ALLOWABLE CROSS SLOPE ON SIDEWALKS AND CURB RAMPS WILL BE 2% MAXIMUM.
10. CONSTRUCT THE SIDE FLARE SLOPE A MAXIMUM OF 10% MEASURED ALONG THE CURB LINE.
11. CONSTRUCT THE COUNTER SLOPE OF THE GUTTER OR STREET AT THE BASE OF THE CURB RAMP A MAXIMUM OF 5% AND MAINTAIN A SMOOTH TRANSITION.
12. CONSTRUCT LANDINGS FOR SIDEWALK A MINIMUM OF 4'x4' WITH A MAXIMUM SLOPE OF 2% IN ANY DIRECTION. CONSTRUCT LANDINGS FOR MEDIAN ISLANDS A MINIMUM OF 5'x5' WITH A MAXIMUM SLOPE OF 2% IN ANY DIRECTION.
13. TO USE A MEDIAN ISLAND AS A PEDESTRIAN REFUGE AREA, MEDIAN ISLANDS WILL BE A MINIMUM OF 6' WIDE. CONSTRUCT MEDIAN ISLANDS TO PROVIDE PASSAGE OVER OR THROUGHT THE ISLAND.
14. SMALL CHANNELIZATION ISLANDS THAT CAN NOT PROVIDE A 5'X5' LANDING AT THE TOP OF A RAMPS, WILL BE CUT THROUGH LEVEL WITH THE SURFACE STREET.
15. CURB RAMPS WITH RETURNED CURBS MAY BE USED ONLY WHERE PEDESTRIANS WOULD NOT NORMALLY WALK ACROSS THE RAMP. THE ADJACENT SURFACE IS PLANTING OR OTHER NON-WALKING SURFACE OR THE SIDE APPROACH IS SUBSTANTIALLY OBSTRUCTED.
16. PLACE A 1/2" EXPANSION JOINT WHERE THE CONCRETE CURB RAMP JOINS THE CURB AS SHOWN IN ROADWAY STANDARD DRAWING 848.01
17. PLACE ALL PEDESTRIAN PUSH BUTTON ACTUATORS AND CROSSING SIGNALS AS SHOWN IN THE PLANS OR AS SHOWN IN THE MUTCD.
18. CURB RAMPS THROUGH MEDIAN ISLANDS, SINGLE RAMPS AT DUAL CROSSWALKS OR LIMITED R/W SITUATIONS, WILL BE HANDLED BY SPECIAL DETAILS. CONTACT THE CONTRACT STANDARDS AND DEVELOPMENT UNIT FOR THE DETAILS OR FOR A SPECIAL DESIGN.

1-18 STATE OF NORTH CAROLINA DEPT. OF TRANSPORTATION DIVISION OF HIGHWAYS RALEIGH, N.C.

ROADWAY STANDARD DRAWING FOR
CURB RAMPS
NOTES

SHEET 3 OF 3
848.05

FINAL DRAWING - NOT RELEASED FOR CONSTRUCTION

MCADAMS
The John R. McAdams Company, Inc.
2905 Meridian Parkway
Durham, NC 27713

phone 919. 361. 5000
fax 919. 361. 2269
license number: C-0293, C-187

www.mcadamsco.com

CLIENT

ASHTON WOODS
5711 SIX FORKS ROAD, SUITE 300
RALEIGH, NORTH CAROLINA 27609

ASHTON WOODS

THE POINT PHASES 11-13

CONSTRUCTION DRAWINGS
EAST YOUNG STREET
TOWN OF ROLESVILLE, WAKE FOREST TOWNSHIP,
WAKE COUNTY, NORTH CAROLINA

CD XX-XX

NORTH CAROLINA PROFESSIONAL SEAL 22630 ENGINEER WILLIAM T. O'DANIEL
NOT FOR CONSTRUCTION

REVISIONS

NO. DATE

PLAN INFORMATION

PROJECT NO.	AWH-20000
FILENAME	AWH20000-CD-PKG-02-D1
CHECKED BY	.
DRAWN BY	.
SCALE	N.T.S.
DATE	10. 27. 2022

SHEET

SITE DETAILS

C8.00

M:\Projects\AWH\AWH-20000\04-Production\Engineering\The Point North\Current Drawings\AWH20000-North-D1.dwg, 10/27/2022 8:51:15 AM, Williams, 1:1
M:\Projects\AWH\AWH-20000\04-Production\Engineering\The Point North\Current Drawings\AWH20000-North-D1.dwg, 10/27/2022 8:51:16 AM, Sherrill Williams

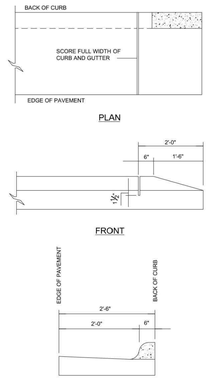

CITY OF RALEIGH
STANDARD DETAIL

REVISIONS	DATE 8/1/18	NOT TO SCALE
	STANDARD METHOD OF ENDING CURB AND GUTTER	
	T-10.25	

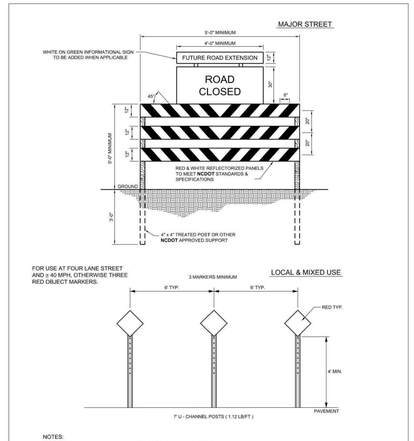

NOTES:
1. BARRICADE(S) TO BE ERECTED ACROSS ENTIRE ROADWAY INCLUDING CURB & GUTTER.
2. ADVANCE WARNING SIGN W14-1 (DEAD END) SHALL BE PLACED JUST AFTER LAST INTERSECTING STREET.
3. MARKINGS FOR BARRICADE RAILS SHALL BE REFLECTIVE AND ALTERNATE RED & WHITE STRIPS.
4. "ROAD CLOSED" SIGN SHALL MEET SPECIFICATIONS OF M.U.T.C.D. R11-2 AND BE REQUIRED ATOP EACH BARRICADE USED.
5. CALL 811 FOR UNDERGROUND UTILITY LOCATE PRIOR TO INSTALLATION.

CITY OF RALEIGH
STANDARD DETAIL

REVISIONS	DATE 8/1/18	NOT TO SCALE
	TEMPORARY BARRICADE FOR DEAD END ROADS	
	T-10.28	

NOTE: SEE STANDARD DETAIL T-20.05 FOR PAVEMENT MARKING PLACEMENT

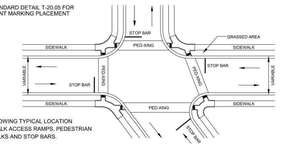

DETAIL SHOWING TYPICAL LOCATION OF SIDEWALK ACCESS RAMPS, PEDESTRIAN CROSSWALKS AND STOP BARS.

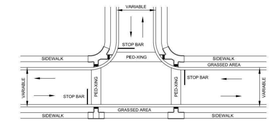

DETAIL SHOWING TYPICAL LOCATION OF SIDEWALK ACCESS RAMPS PEDESTRIAN CROSSWALKS AND STOP BARS FOR TEE INTERSECTION.

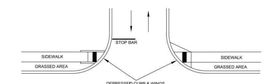

FOR RAMPS AT ASPHALT TO ASPHALT STREET TYPE DRIVEWAYS OR PRIVATE STREET TIE IN.

SHEET 1 OF 8

CITY OF RALEIGH
STANDARD DETAIL

REVISIONS	DATE 8/1/18	NOT TO SCALE
	CURB RAMPS	
	T-20.01.1	

PAY LIMITS FOR CURB RAMP

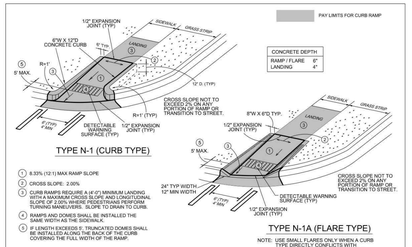

CONCRETE DEPTH	
RAMP / FLARE	6"
LANDING	4"

TYPE N-1 (CURB TYPE)

1. 8.33% (12:1) MAX RAMP SLOPE
2. CROSS SLOPE: 2.00%
3. CURB RAMPS REQUIRE A (4' 0") MINIMUM LANDING WITH A MAXIMUM CROSS SLOPE AND LONGITUDINAL SLOPE OF 2.00% WHERE PEDESTRIANS PERFORM TURNING MANEUVERS. SLOPE TO DRAIN TO CURB.
4. RAMPS AND DOMES SHALL BE INSTALLED THE SAME WIDTH AS THE SIDEWALK.
5. IF LENGTH EXCEEDS 5'. TRUNCATED DOMES SHALL BE INSTALLED ALONG THE BACK OF THE CURB COVERING THE FULL WIDTH OF THE RAMP.

TYPE N-1A (FLARE TYPE)

NOTE: USE SMALL FLARES ONLY WHEN A CURB RAMP CAN NOT BE CONSTRUCTED WITH APPROPRIATE VEHICULAR TURNING MOVEMENTS.

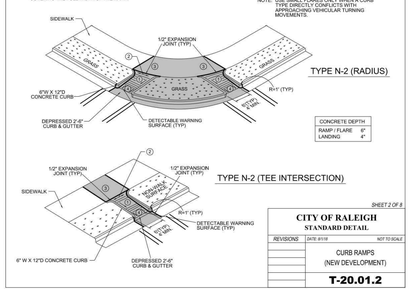

CONCRETE DEPTH	
RAMP / FLARE	6"
LANDING	4"

SHEET 2 OF 8

CITY OF RALEIGH
STANDARD DETAIL

REVISIONS	DATE 8/1/18	NOT TO SCALE
	CURB RAMPS (NEW DEVELOPMENT)	
	T-20.01.2	

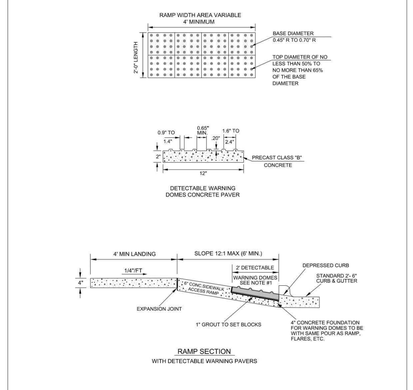

NOTES:
1. DETECTABLE WARNING DOMES SHALL COVER 2'-0" LENGTH AND FULL WIDTH OF THE RAMP FLOOR AS SHOWN ON DETAIL. SIZE OF PAVER SHALL BE 1' X 1'.
2. THE COLOR FOR THE DETECTABLE WARNING AREA SHALL BE YELLOW FOR CONTRAST.

SHEET 2 OF 4

CITY OF RALEIGH
STANDARD DETAIL

REVISIONS	DATE 8/1/18	NOT TO SCALE
	DETECTABLE WARNING SURFACE PAVERS	
	T-20.04.2	

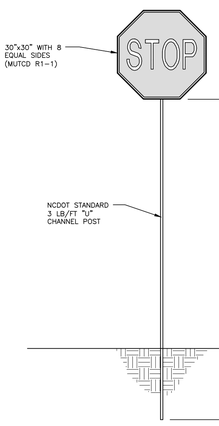

STOP SIGN DETAIL
N.T.S.

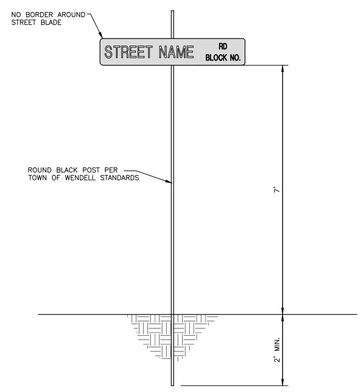

STREET SIGN DETAIL
N.T.S.

PAY LIMITS FOR CURB RAMP

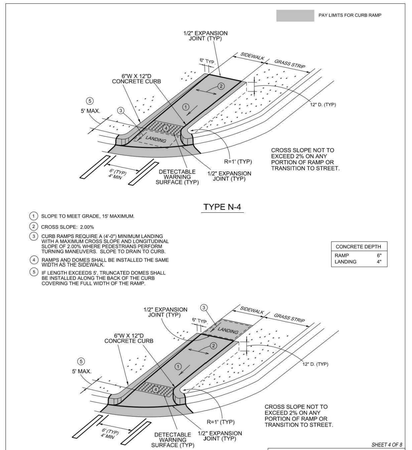

CONCRETE DEPTH	
RAMP	6"
LANDING	4"

TYPE N-4

1. SLOPE TO MEET GRADE, 15' MAXIMUM.
2. CROSS SLOPE: 2.00%
3. CURB RAMPS REQUIRE A (4' 0") MINIMUM LANDING WITH A MAXIMUM CROSS SLOPE AND LONGITUDINAL SLOPE OF 2.00% WHERE PEDESTRIANS PERFORM TURNING MANEUVERS. SLOPE TO DRAIN TO CURB.
4. RAMPS AND DOMES SHALL BE INSTALLED THE SAME WIDTH AS THE SIDEWALK.
5. IF LENGTH EXCEEDS 5'. TRUNCATED DOMES SHALL BE INSTALLED ALONG THE BACK OF THE CURB COVERING THE FULL WIDTH OF THE RAMP.

TYPE N-4A

SHEET 4 OF 8

CITY OF RALEIGH
STANDARD DETAIL

REVISIONS	DATE 8/1/18	NOT TO SCALE
	CURB RAMPS (NEW DEVELOPMENT)	
	T-20.01.4	

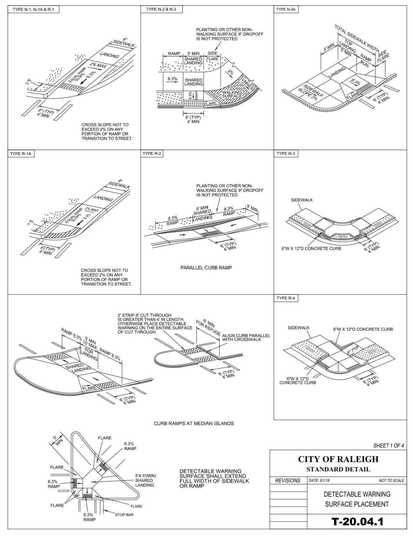

SHEET 1 OF 4

CITY OF RALEIGH
STANDARD DETAIL

REVISIONS	DATE 8/1/18	NOT TO SCALE
	DETECTABLE WARNING SURFACE PLACEMENT	
	T-20.04.1	

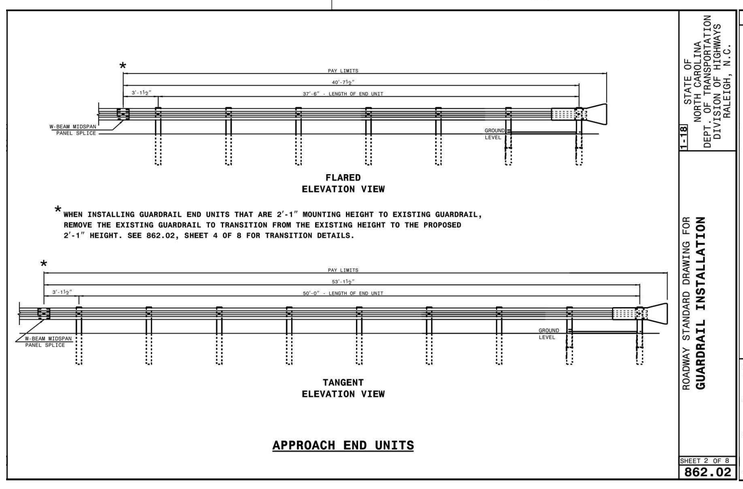

* WHEN INSTALLING GUARDRAIL END UNITS THAT ARE 2'-1" MOUNTING HEIGHT TO EXISTING GUARDRAIL, REMOVE THE EXISTING GUARDRAIL TO TRANSITION FROM THE EXISTING HEIGHT TO THE PROPOSED 2'-1" HEIGHT. SEE 862.02, SHEET 4 OF 8 FOR TRANSITION DETAILS.

APPROACH END UNITS

STATE OF NORTH CAROLINA
DEPT. OF TRANSPORTATION
DIVISION OF HIGHWAYS
RALEIGH, N.C.

1-18

ROADWAY STANDARD DRAWING FOR
GUARDRAIL INSTALLATION

SHEET 2 OF 8
862.02

CROSSWALK PLACEMENT GUIDANCE

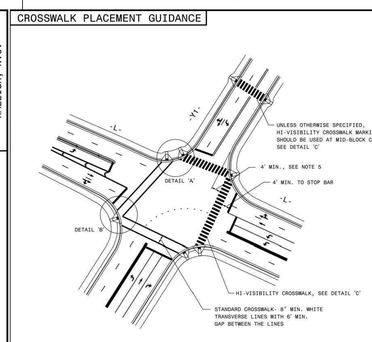

GENERAL NOTES:

1- USE THE DETAILS ABOVE AND THE FOLLOWING NOTES FOR GUIDANCE IN PLACING CROSSWALK MARKINGS. REFER TO NCDOT ROADWAY STANDARD DRAWINGS, MUTCD AND ADA STANDARDS FOR ADDITIONAL GUIDANCE.

2- THE LOCATION AND TYPE OF CROSSWALK MARKINGS SHOWN ON THE ABOVE DETAILS ARE FOR REFERENCE ONLY. LOCATE CROSSWALK MARKINGS AS SHOWN ON THE PROJECT DETAIL SHEETS OR AS DIRECTED BY THE ENGINEER. THE CROSSWALK MARKING TYPE, STANDARD OR HI-VISIBILITY, SHALL BE INSTALLED AS SPECIFIED ON THE PROJECT DETAIL SHEETS OR AS DIRECTED BY THE ENGINEER.

3- THE STANDARD CROSSWALK IS TWO WHITE 8" WIN. TRANSVERSE LINES WITH A 6' MIN. GAP BETWEEN THE LINES. THE HI-VISIBILITY CROSSWALK IS WHITE 24" MAX. WIDE LONGITUDINAL LINES WITH 24" MIN. GAPS BETWEIN LINES, SEE DETAIL 'C'. HI-VISIBILITY CROSSWALKS SHOULD BE A MINIMUM OF 6' WIDE. CURB RAMPS SHALL BE WHOLLY CONTAINED WITHIN THE MARKINGS, EXCLUDING ANY FLARES.

4- STOP BARS SHOULD BE PLACED A 4' MIN. IN ADVANCE OF NEAREST CROSSWALK LINE.

5- SET BACK DISTANCE FROM INSIDE CROSSWALK MARKING TO NEAREST EDGE OF TRAVEL IS 4' MIN.

6- BEYOND THE BOTTOM GRADE BREAK, A CLEAR SPACE OF 4' X 4' MIN. SHALL BE PROVIDED WITHIN THE MARKINGS.

7- SINGLE DIAGONAL CURB RAMPS WITH FLARED SIDES SHALL HAVE A SEGMENT OF CURB 2' MIN. LONG LOCATED ON EACH SIDE OF THE CURB RAMP AND WITHIN THE MARKED CROSSING, SEE DETAIL 'B'.

8- CURB RAMPS SHALL BE CONSTRUCTED IN ACCORDANCE TO THE LATEST NCDOT ROADWAY STANDARD DRAWINGS. CURB RAMPS THROUGH MEDIAN ISLANDS, SINGLE RAMPS AT DUAL CROSSWALKS OR LIMITED R/W SITUATIONS, WILL BE HANDLED BY SPECIAL DETAILS. CONTACT THE CONTRACT STANDARDS AND DEVELOPMENT UNIT FOR DETAILS OR A SPECIAL DESIGN.

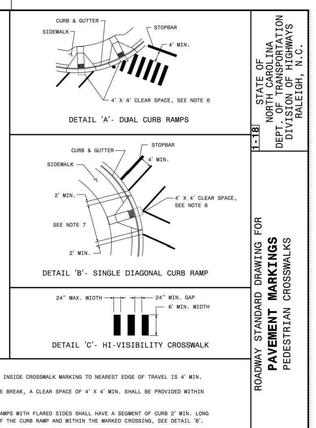

STATE OF NORTH CAROLINA
DEPT. OF TRANSPORTATION
DIVISION OF HIGHWAYS
RALEIGH, N.C.

1-18

ROADWAY STANDARD DRAWING FOR
PAVEMENT MARKINGS
PEDESTRIAN CROSSWALKS

SHEET 1 OF 1
1205.07

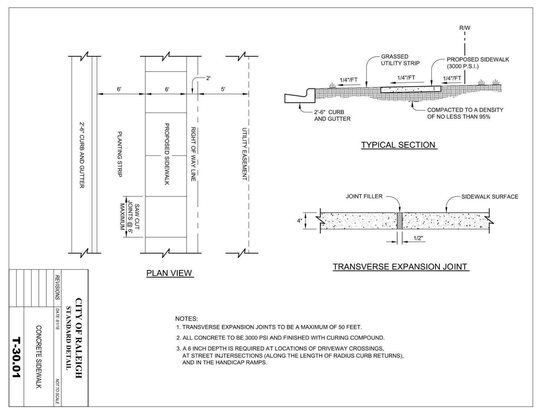

NOTES:
1. TRANSVERSE EXPANSION JOINTS TO BE A MAXIMUM OF 50 FEET.
2. ALL CONCRETE TO BE 3000 PSI AND FINISHED WITH CURING COMPOUND.
3. A 6 INCH DEPTH IS REQUIRED AT LOCATIONS OF DRIVEWAY CROSSINGS, AT STREET INTERSECTIONS (ALONG THE LENGTH OF RADIUS CURB RETURNS), AND IN THE HANDICAP RAMPS.

CITY OF RALEIGH
STANDARD DETAIL

REVISIONS	DATE 8/1/18	NOT TO SCALE
	CONCRETE SIDEWALK	
	T-30.01	

FINAL DRAWING - NOT RELEASED FOR CONSTRUCTION

McADAMS
The John R. McAdams Company, Inc.
2905 Meridian Parkway
Durham, NC 27713

phone 919. 361. 5000
fax 919. 361. 2269
license number: C-0293, C-187

www.mcadamsco.com

CLIENT

ASHTON WOODS
5711 SIX FORKS ROAD, SUITE 300
RALEIGH, NORTH CAROLINA 27609

ASHTON WOODS

THE POINT
PHASES 11-13
CONSTRUCTION DRAWINGS
EAST YOUNG STREET
TOWN OF ROLESVILLE, WAKE FOREST TOWNSHIP, WAKE COUNTY, NORTH CAROLINA

CD XX-XX

NORTH CAROLINA PROFESSIONAL SEAL 22630 ENGINEER WILLIAM T. O'DANIEL
NOT FOR CONSTRUCTION

REVISIONS

NO. DATE

PLAN INFORMATION

PROJECT NO.	AWH-20000
FILENAME	AWH20000-CD-PKG-02-D1
CHECKED BY	.
DRAWN BY	.
SCALE	N.T.S.
DATE	10. 27. 2022

SHEET

SITE DETAILS

C8.01

M:\Projects\AWH\AWH-20000\04-Production\Engineering\The Point North\Current Drawings\AWH20000-North-D1.dwg, 10/27/2022 8:51:26 AM, Williams, 1:1
M:\Projects\AWH\AWH-20000\04-Production\Engineering\The Point North\Current Drawings\AWH20000-North-D1.dwg, 10/27/2022 8:51:27 AM, Sherrill Williams

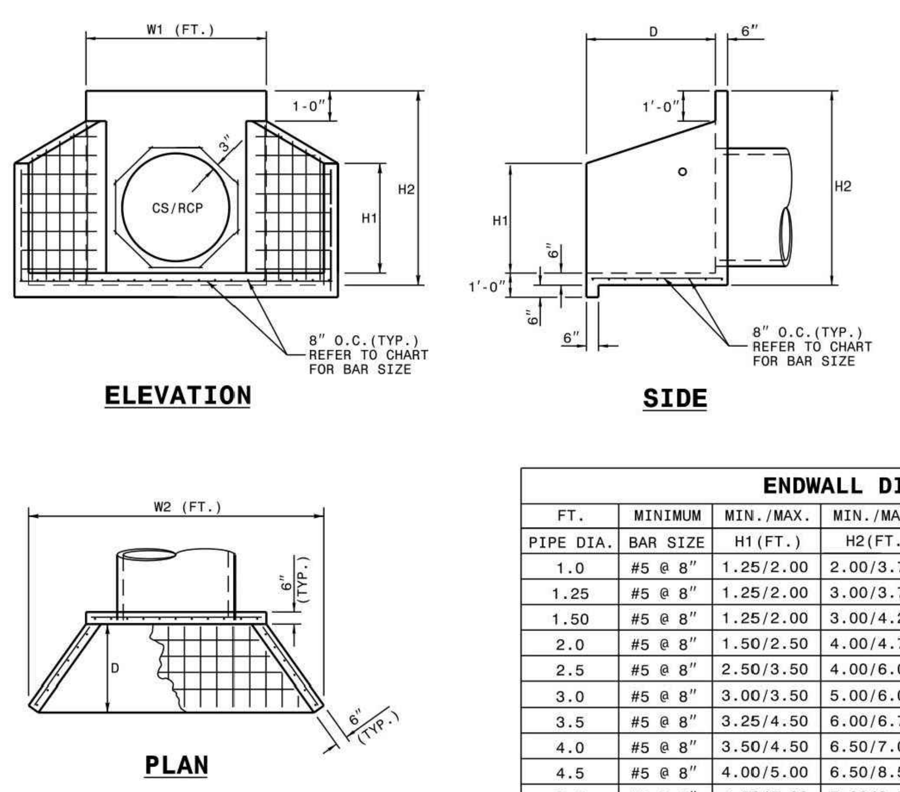

NOTES:

* THIS PRECAST ENDWALL MAY BE USED FOR THE FOLLOWING STANDARDS: 838.01, 838.11, 838.21, 838.27, 838.33, 838.39, 838.51, 838.57, 838.63 AND 838.69.
* INSTALL PRECAST ENDWALLS WITH WINGS AND PAY FOR IN ACCORDANCE WITH SPECIFICATION SECTION 838.
* USE 4000 PSI CONCRETE.
* PROVIDE ALL REINFORCING STEEL WHICH MEETS ASTM A615 FOR GRADE 60 AND WELDED WIRE FABRIC CONFORMING TO ASTM A185 WITH 2" MIN. CLEARANCE.
* PLACE LIFT HOLES OR PINS IN ACCORDANCE WITH OSHA STANDARD 1926.704.
* PIPE TO BE GROUTED INTO HEADWALL AT JOB SITE BY CONTRACTOR
* ALL ELEMENTS PRECAST TO MEET ASTM C913.
* WELDED WIRE FABRIC MAY BE SUBSTITUTED FOR REBAR AS LONG AS THE SAME AREA OF STEEL IS PROVIDED.
* CHAMFER ALL CORNERS 1" OR HAVE A RADIUS OF 1".

NOTE: THE MINIMUM BAR SIZE SHALL BE #5 BARS AT 8" CTS.THE CONTRACTOR WILL HAVE THE OPTION TO INCREASE THIS BAR SIZE AS NEEDED.

ENDWALL DIMENSIONS

FT. PIPE DIA.	MINIMUM BAR SIZE	MIN./MAX. H1(FT.)	MIN./MAX. H2(FT.)	MIN./MAX. D (FT.)	MIN./MAX. W1	MIN./MAX. W2
1.0	#5 @ 8"	1.25/2.00	2.00/3.75	1.25/1.75	3.00/3.75	5.50/6.00
1.25	#5 @ 8"	1.25/2.00	3.00/3.75	1.25/2.00	3.50/3.75	6.50/6.75
1.50	#5 @ 8"	1.25/2.00	3.00/4.25	1.50/2.50	3.50/3.75	6.50/6.75
2.0	#5 @ 8"	1.50/2.50	4.00/4.75	1.75/2.50	4.00/4.25	7.50/8.25
2.5	#5 @ 8"	2.50/3.50	4.00/6.00	2.00/3.00	4.50/5.50	10.00/11.50
3.0	#5 @ 8"	3.00/3.50	5.00/6.00	2.75/3.50	5.25/5.75	11.50/11.75
3.5	#5 @ 8"	3.25/4.50	6.00/6.75	3.25/3.50	6.00/6.75	12.00/13.25
4.0	#5 @ 8"	3.50/4.50	6.50/7.00	3.25/3.50	6.50/6.75	13.00/13.25
4.5	#5 @ 8"	4.00/5.00	6.50/8.50	3.25/4.00	7.00/9.25	13.50/15.75
5.0	#5 @ 8"	4.50/5.00	7.00/8.50	3.25/4.00	7.25/9.25	13.75/15.75
5.5	#5 @ 8"	4.50/5.00	7.50/8.50	3.25/4.00	7.25/9.25	14.00/15.75
6.0	#5 @ 8"	4.50/5.00	7.50/8.50	3.25/4.00	7.75/9.25	14.75/16.75

STATE OF NORTH CAROLINA DEPT. OF TRANSPORTATION DIVISION OF HIGHWAYS RALEIGH, N.C.
1-18
ROADWAY STANDARD DRAWING FOR
PRECAST CONCRETE ENDWALL
FOR SINGLE 12" THRU 72" PIPE - 90° SKEW
SHEET 1 OF 1
838.80

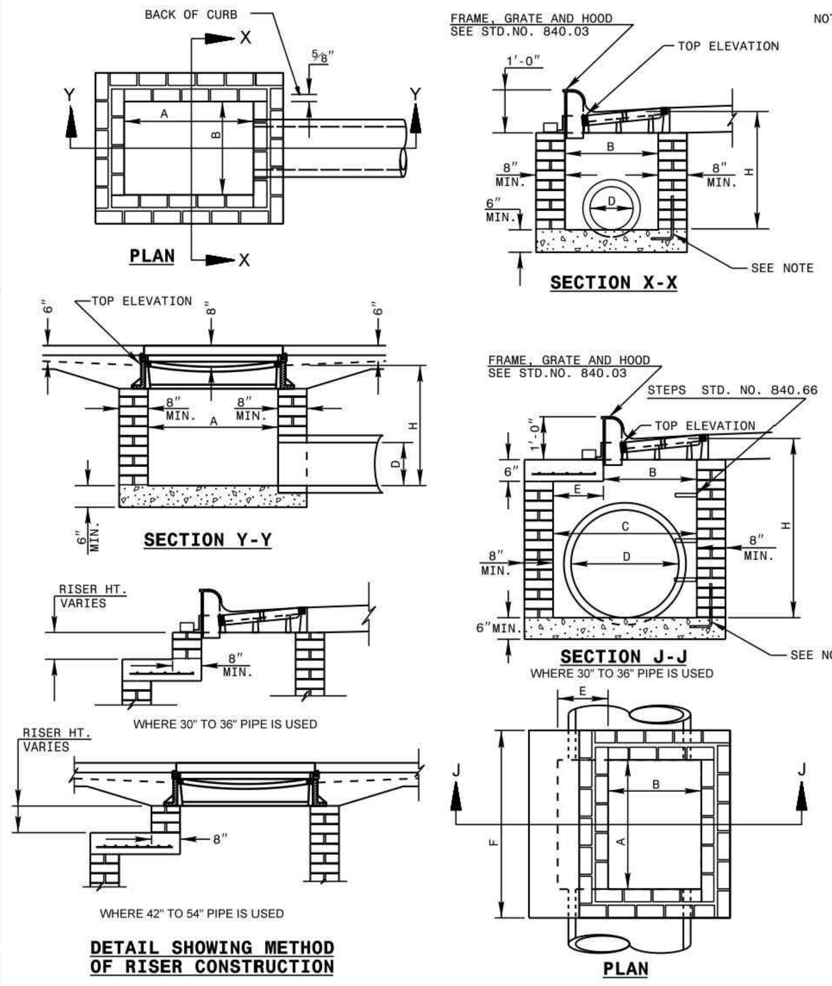

NOTES: MORTAR JOINTS ½" +/- ⅛" THICK.
USE CLASS "B" CONCRETE THROUGHOUT.
USE FORMS FOR CONSTRUCTION OF THE BOTTOM SLAB.
DEDUCT FOR PIPE(S) FROM TOTAL CU. YDS. OF BRICK MASONRY.
USE #4 BAR DOWELS AT 12" CENTERS FOR ALL PIPE SIZES.
PROVIDE ALL CATCH BASINS OVER 3'-6" IN DEPTH WITH STEPS 12" ON CENTER. USE STEPS WHICH COMPLY WITH STD. DRAWING 840.66.
USE TYPE "E", "F" AND "G" GRATES UNLESS OTHERWISE INDICATED.
USE BRICK OR CONCRETE BLOCK WHICH COMPLIES WITH THE REQUIREMENTS OF SECTION 840 OF THE STANDARD SPECIFICATIONS.
IF REINFORCED CONCRETE PIPE IS SET IN BOTTOM SLAB OF BOX, ADD TO SLAB AS SHOWN ON STD. NO. 840.00.
FOR 8'-0" IN HEIGHT OR LESS, USE 8" WALL. OVER 8'-0" IN HEIGHT, USE 12" WALL TO 6'-0" FROM TOP OF WALL AND 8" WALL FOR THE REMAINING 6'-0". QUANTITES TO BE ADJUSTED ACCORDINGLY.
CONSTRUCT WITH PIPE CROWNS MATCHING.
CHAMFER ALL EXPOSED CORNERS 1".
DRAWING NOT TO SCALE.

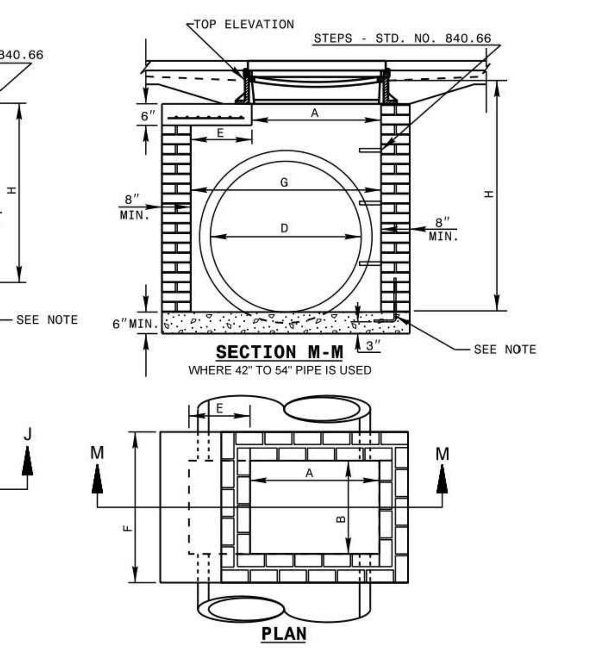

STATE OF NORTH CAROLINA DEPT. OF TRANSPORTATION DIVISION OF HIGHWAYS RALEIGH, N.C.
1-18
ROADWAY STANDARD DRAWING FOR
BRICK CATCH BASIN
12" THRU 54" PIPE
SHEET 1 OF 2
840.01

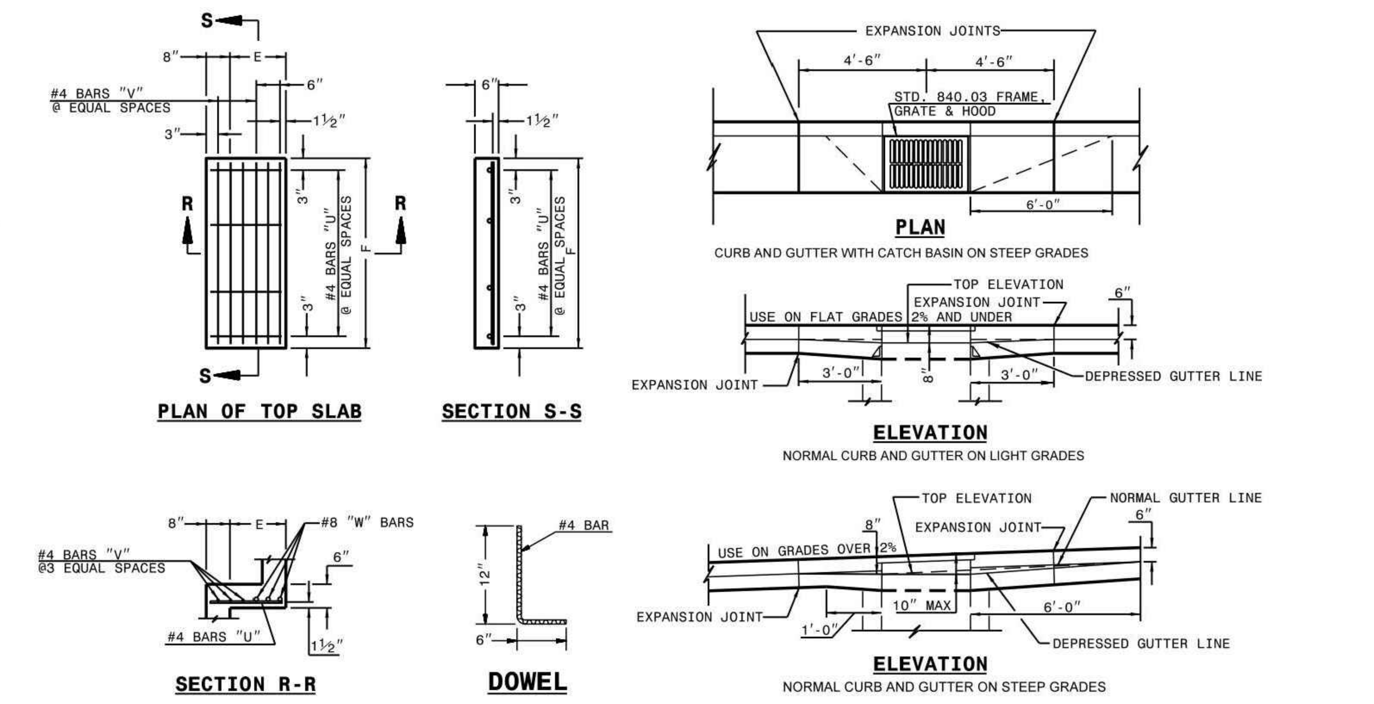

MINIMUM DIMENSIONS AND QUANTITIES FOR BRICK CATCH BASIN(BASED ON MIN. HEIGHT, H, WITH NO RISER)*

PIPE D	SPAN A	WIDTH B	WIDTH C	SPAN G	MIN. HEIGHT H	TOP SLAB E	TOP SLAB F	BARS-U NO.	BARS-U LENGTH	BARS-V NO.	BARS-V LENGTH	BARS-W NO.	BARS-W LENGTH	TOTAL LBS.	CU.YDS. CONC. TOP SLAB	BOTTOM SLAB	TOTAL CONC.	BRICK MSNR. IN WALLS	TOTAL BRICK AND CONCRETE	DEDUCTIONS C.M.	DEDUCTIONS R.C.
12"	3'-0"	2'-2"	--	--	2'-9"	--	--	--	--	--	--	--	--	--	--	0.281	0.281	0.883	1.164	0.020	0.042
15"	3'-0"	2'-2"			3'-0"											0.281	0.281	0.963	1.244	0.031	0.047
18"	3'-0"	2'-2"			3'-3"											0.281	0.281	1.043	1.324	0.044	0.065
24"	3'-0"	2'-2"			3'-9"											0.281	0.281	1.204	1.485	0.078	0.121
30"	3'-0"	2'-2"	3'-4"		4'-3"	1'-2"	4'-4"	4	1'-6"	3	4'-1"	3	4'-1"	45	0.147	0.374	0.521	1.606	2.217	0.122	0.184
36"	3'-0"	2'-2"	3'-10"		4'-9"	1'-8"	4'-4"	4	2'-0"	4	4'-1"	3	4'-1"	49	0.187	0.415	0.602	1.914	2.516	0.176	0.261
42"	3'-0"	2'-2"		4'-5"	5'-3"	1'-5"	3'-6"	4	1'-9"	3	3'-3"	3	3'-3"	38	0.135	0.373	0.508	2.152	2.660	0.240	0.371
48"	3'-0"	2'-2"		5'-0"	5'-9"	2'-0"	3'-6"	4	2'-6"	4	3'-3"	3	3'-3"	41	0.173	0.410	0.583	2.415	2.998	0.313	0.477
54"	3'-0"	2'-2"		5'-7"	6'-3"	2'-7"	3'-6"	4	3'-0"	6	3'-3"	3	3'-3"	47	0.211	0.448	0.659	2.806	3.465	0.396	0.595

* RISER HAS .321 CUBIC YARDS OF BRICK MASONRY PER FOOT HEIGHT

STATE OF NORTH CAROLINA DEPT. OF TRANSPORTATION DIVISION OF HIGHWAYS RALEIGH, N.C.
1-18
ROADWAY STANDARD DRAWING FOR
BRICK CATCH BASIN
12" THRU 54" PIPE
SHEET 2 OF 2
840.01

NOTE: USE TYPE "E", "F" AND "G" GRATE UNLESS OTHERWISE NOTED.

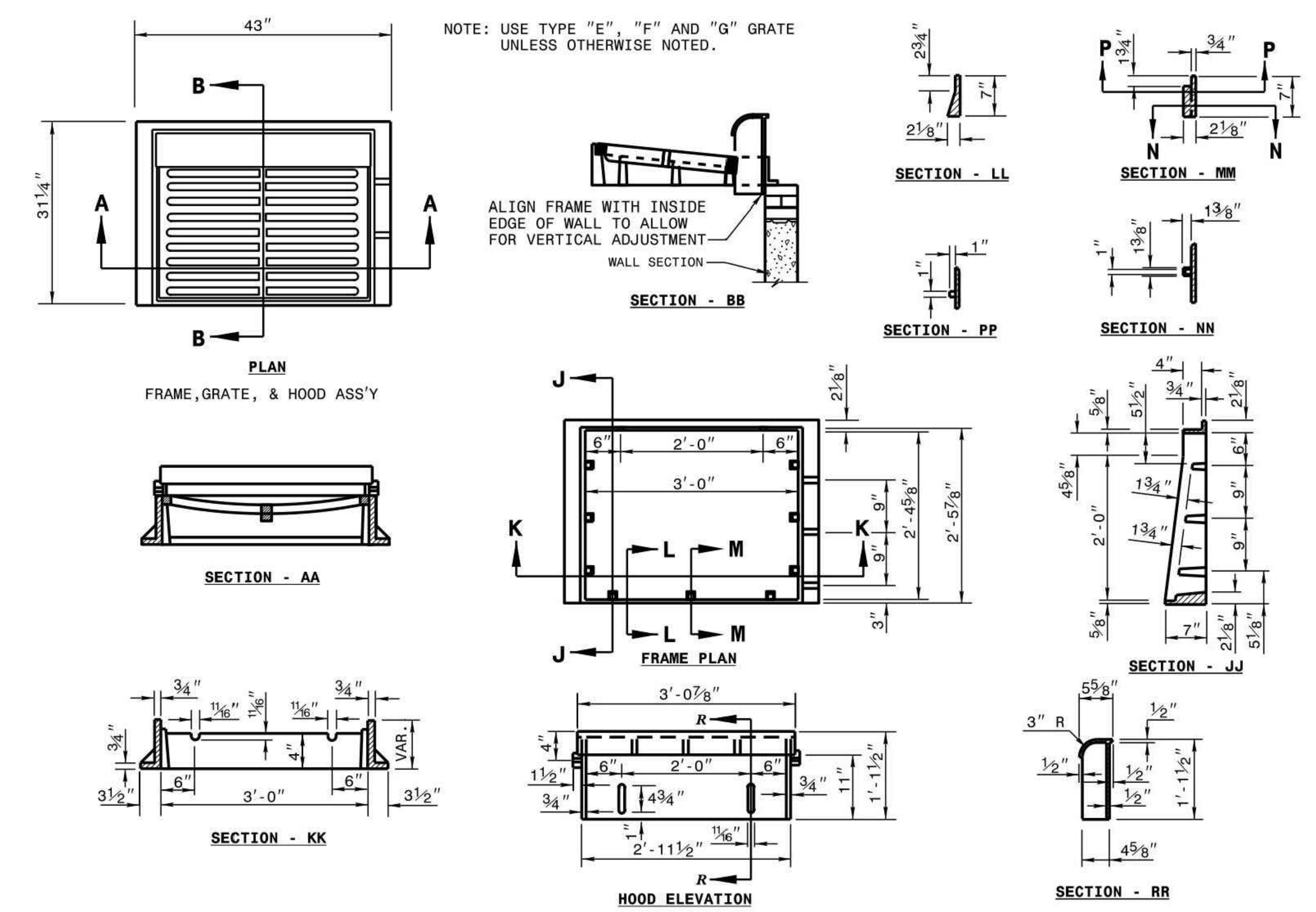

STATE OF NORTH CAROLINA DEPT. OF TRANSPORTATION DIVISION OF HIGHWAYS RALEIGH, N.C.
1-18
ROADWAY STANDARD DRAWING FOR
FRAME, GRATES, AND HOOD
FOR USE ON STANDARD CATCH BASIN
SHEET 1 OF 2
840.03

DETAIL SHOWING TYPES OF GRATES USE ACCORDING TO WATER FLOW.

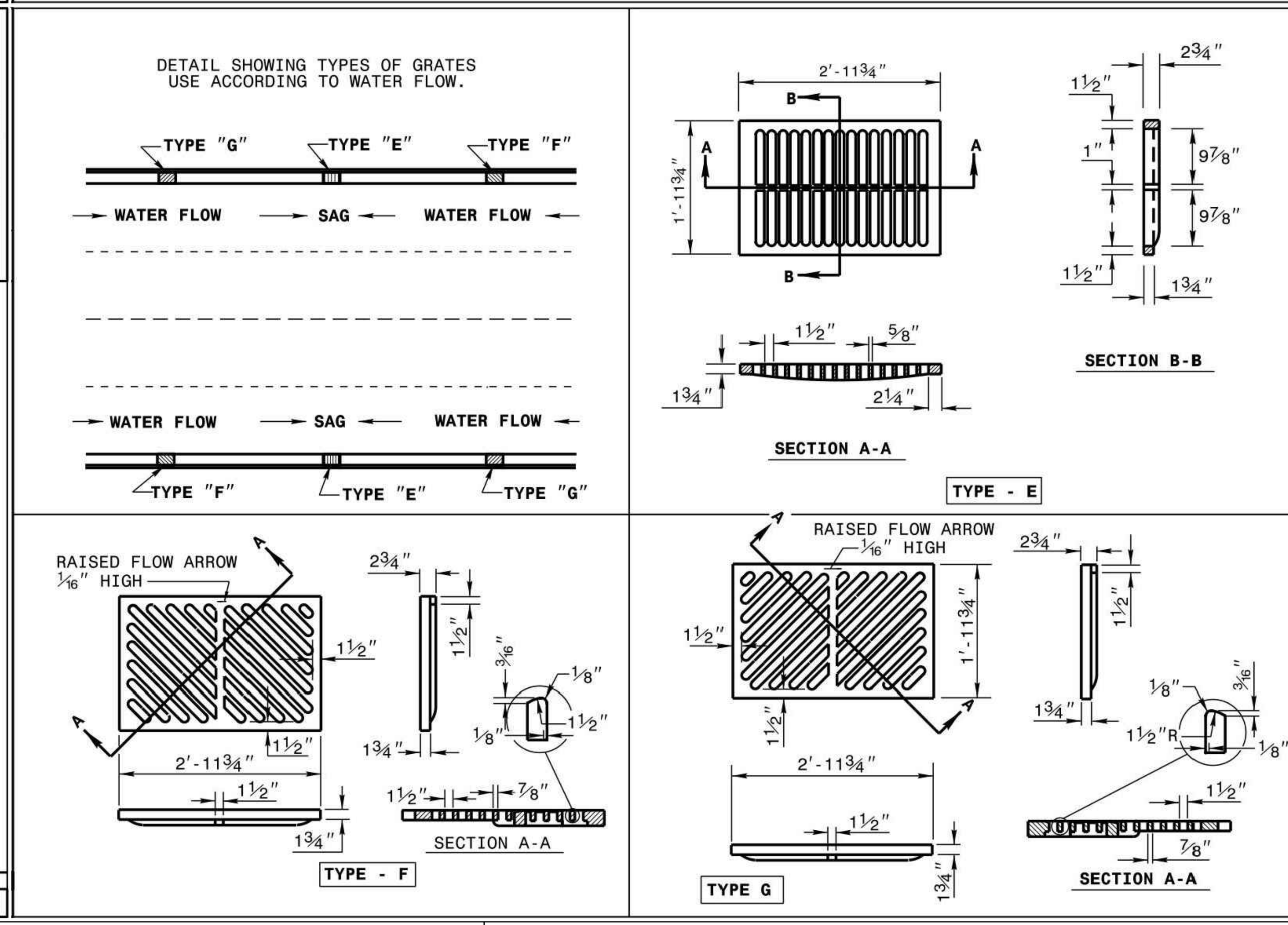

STATE OF NORTH CAROLINA DEPT. OF TRANSPORTATION DIVISION OF HIGHWAYS RALEIGH, N.C.
1-18
ROADWAY STANDARD DRAWING FOR
FRAME, GRATES, AND HOOD
FOR USE ON STANDARD CATCH BASIN
SHEET 2 OF 2
840.03

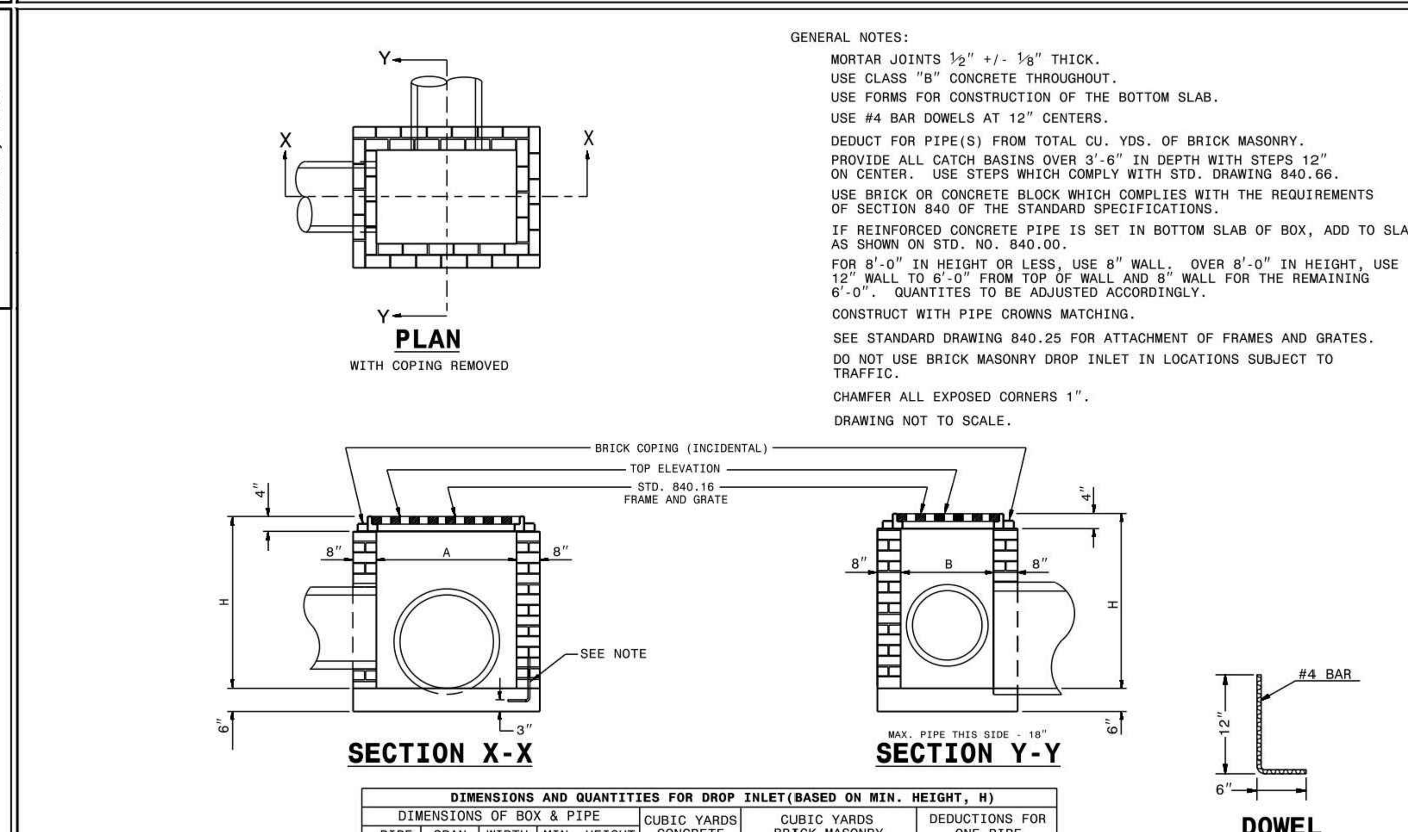

GENERAL NOTES:
MORTAR JOINTS ½" +/- ⅛" THICK.
USE CLASS "B" CONCRETE THROUGHOUT.
USE FORMS FOR CONSTRUCTION OF THE BOTTOM SLAB.
USE #4 BAR DOWELS AT 12" CENTERS.
DEDUCT FOR PIPE(S) FROM TOTAL CU. YDS. OF BRICK MASONRY.
PROVIDE ALL CATCH BASINS OVER 3'-6" IN DEPTH WITH STEPS 12" ON CENTER. USE STEPS WHICH COMPLY WITH STD. DRAWING 840.66.
USE BRICK OR CONCRETE BLOCK WHICH COMPLIES WITH THE REQUIREMENTS OF SECTION 840 OF THE STANDARD SPECIFICATIONS.
IF REINFORCED CONCRETE PIPE IS SET IN BOTTOM SLAB OF BOX, ADD TO SLAB AS SHOWN ON STD. NO. 840.00.
FOR 8'-0" IN HEIGHT OR LESS, USE 8" WALL. OVER 8'-0" IN HEIGHT, USE 12" WALL TO 6'-0" FROM TOP OF WALL AND 8" WALL FOR THE REMAINING 6'-0". QUANTITES TO BE ADJUSTED ACCORDINGLY.
CONSTRUCT WITH PIPE CROWNS MATCHING.
SEE STANDARD DRAWING 840.25 FOR ATTACHMENT OF FRAMES AND GRATES.
DO NOT USE BRICK MASONRY DROP INLET IN LOCATIONS SUBJECT TO TRAFFIC.
CHAMFER ALL EXPOSED CORNERS 1".
DRAWING NOT TO SCALE.

DIMENSIONS AND QUANTITIES FOR DROP INLET(BASED ON MIN. HEIGHT, H)

PIPE D	SPAN A	WIDTH B	MIN. HEIGHT H	CUBIC YARDS CONCRETE BOTTOM SLAB	CUBIC YARDS BRICK MASONRY WALL PER FOOT HT.	TOTAL BRICK MASONRY FOR MIN. HEIGHT, H	DEDUCTIONS FOR ONE PIPE C.S.	R.C.
12"	3'-0"	2'-0"	2'-0"	0.268	0.313	0.522	0.020	0.032
15"			2'-3"	0.268	0.313	0.600	0.031	0.047
18"			2'-6"	0.268	0.313	0.678	0.044	0.065
24"			3'-0"	0.268	0.313	0.835	0.078	0.113
30"	3'-0"	2'-0"	3'-6"	0.268	0.313	0.991	0.122	0.170

STATE OF NORTH CAROLINA DEPT. OF TRANSPORTATION DIVISION OF HIGHWAYS RALEIGH, N.C.
1-18
ROADWAY STANDARD DRAWING FOR
BRICK DROP INLET
12" THRU 30" PIPE
SHEET 1 OF 1
840.15

H=	THE FILL HEIGHT MEASURED VERTICALLY AT ANY POINT ALONG THE PIPE FROM THE TOP OF THE EMBANKMENT AT THE POINT. DO NOT OPERATE HEAVY EQUIPMENT OVER ANY PIPE CULVERT UNTIL THE PIPE HAS BEEN PROPERLY BACKFILLED AND COVERED WITH AT LEAST 3 FEET OF APPROVED MATERIAL.
	UNDISTURBED EARTH MATERIAL
	BEDDING (MIDDLE AND OUTER): LOOSELY PLACED SELECT BACKFILL MATERIAL MEETING NCDOT CLASS II, TYPE 1 (WASHED OR UNWASHED CRUSHED STONE SCREENINGS) OR CLASS III, TYPE 1 (NCDOT 2S OR 2MS FINE AGGREGATE). LEAVE SECTION DIRECTLY BENEATH PIPE UNCOMPACTED AS PIPE SEATING AND BACKFILL WILL ACCOMPLISH COMPACTION.
	SELECT BACKFILL (BELOW SPRINGLINE): SELECT BACKFILL MATERIAL MEETING NCDOT CLASS II, TYPES 1 OR 2 OR NCDOT CLASS III, TYPES 1 OR 2
	BACKFILL: APPROVED SUITABLE LOCAL COMPACTABLE MATERIAL ABOVE SPRINGLINE OF PIPE MEETING LOCAL MUNICIPAL SPECIFICATIONS.
	ROCK FOUNDATION OR UNSUITABLE MATERIAL FOUNDATION: SELECT MATERIAL NCDOT CLASS V (#78M STONE) OR NCDOT CLASS VI (#57 STONE) FOR FOUNDATION CONDITIONING. ENCAPSULATE WITH ENGINEERING FABRIC AS DIRECTED BY THE ENGINEER: TYPE 4 SOIL STABILIZATION FABRIC (NCDOT TABLE 1056-1). OVERLAP ALL TRANSVERSE AND LONGITUDINAL JOINTS IN FABRIC AT LEAST 18 INCHES. MAINTAIN THE PIPE FOUNDATION IN A DRY CONDITION.

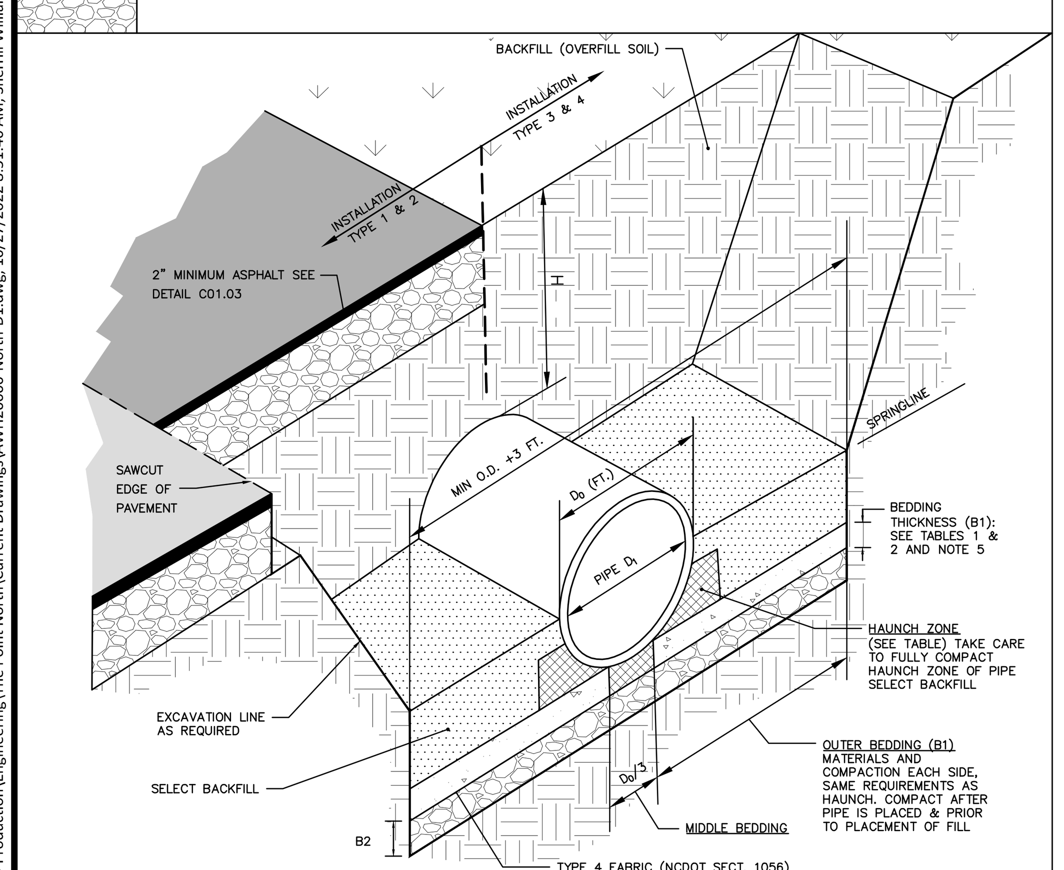

STORM DRAIN PIPE INSTALLATION
N.T.S.

1 OF 3

TABLE 1
EQUIVALENT USCS[a] AND AASHTO SOIL CLASSIFICATION FOR SIDD[b] SOIL DESIGNATIONS

SIDD	USCS	NCDOT/AASHTO
GRAVELLY SAND (CATEGORY I)	SW, SP, GW, GP	–NCDOT CLASS II–TYPE I (CRUSHED STONE SCREEENINGS), LL<30; PI≤6 –NCDOT CLASS III, TYPE I (2S OR 2MS), LL<30; PI≤6
SANDY SILT (CATEGORY II)	GM, SM, ALSO GC, SC WITH LESS THAN 20% PASSING #200 SIEVE	–NCDOT CLASS II TYPE I (CRUSHED STONE SCREENINGS) AND CLASS II, TYPE 2 (AASHTO M145 FOR A–2–4 WITH MAX PI OF 6, A–4 W/ MAX 45% PASSING #200 SIEVE AND A MAX PI OF 6) –NCDOT CLASS III, TYPE 1 (2S OR 2MS) OR CLASS III, TYPE 2 (AASHTO M145 FOR SOIL CLASSIFICATION A–1 OR A–3)
SILTY CLAY (CATEGORY III)	CL, MH, GC, SC	A5, A6

a UNIFOLD SOIL CLASSIFICATION SYSTEM
b STANDARD INSTALLATIONS DIRECT DESIGN

TABLE 2
STANDARD INSTALLATIONS SOILS AND MINIMUM COMPACTION REQUIREMENTS

INSTALLATION TYPE	BEDDING THICKNESS	OUTER BEDDING (B1) NOTE 5 (% COMPACTION/CATEGORY)	HAUNCH ZONE & SELECT BACKFILL AREA (% COMPACTION/CATEGORY)	LOCATION
TYPE 1	B1 = Di/6 (6" MIN) B2=IF ROCK FOUNDATION OR OVER UNSUITABLE FOUNDATION, ½" /FT OF 'H', 12" MIN/24" MAX	95% CATEGORY 1	90% CATEGORY 1 95% CATEGORY II	PAVED AREAS WITH 2' OR LESS BURY
TYPE 2	B1 = Di/6 (6" MIN) B2=IF ROCK FOUNDATION OR OVER UNSUITABLE FOUNDATION, ½" /FT OF 'H', 12" MIN/24" MAX	90% CATEGORY 1	85% CATEGORY 1 90% CATEGORY II	PAVED AREAS WITH GREATER THAN 2' OF BURY
TYPE 3	B1 = Di/6 (6" MIN) B2=IF ROCK FOUNDATION OR OVER UNSUITABLE FOUNDATION, ½" /FT OF 'H', 12" MIN/24" MAX	85% CATEGORY 1 90% CATEGORY II	85% CATEGORY 1 90% CATEGORY II OR 95% CATEGORY III	IN R/W OUTSIDE OF PAVEMENT
TYPE 4	B1 = Di/6 (6" MIN) B2=IF ROCK FOUNDATION OR OVER UNSUITABLE FOUNDATION, ½" /FT OF 'H', 12" MIN/24" MAX	NO COMPACTION REQUIRED, EXCEPT IF CATEGORY III, USE 85% CATEGORY III	NO COMPACTION REQUIRED, EXCEPT IF CATEGORY III, USE 85% CATEGORY III	NATURAL AREAS

NOTES:
1. COMPACTION AND SOIL SYMBOLS – I.E. "95% CATEGORY I" – REFERS TO CATEGORY I SOIL MATERIAL WITH MINIMUM STANDARD PROCTOR COMPACTION OF 95%.
2. SOIL IN THE OUTER BEDDING, HAUNCH, AND LOWER SIDE ZONES, EXCEPT UNDER THE MIDDLE ⅓ OF THE PIPE, SHALL BE COMPACTED TO AT LEAST THE SAME COMPACTION AS THE MAJORITY OF THE SOIL IN THE OVERFILL (BACKFILL) ZONE.
3. FOR TRENCHES. THE TOP ELEVATION SHALL BE NO LOWER THAN 0.1H BELOW FINISHED GRADE OR, FOR ROADWAYS, ITS TOP SHALL BE NO LOWER THAN AN ELEVATION OF 1–FOOT BELOW THE BOTTOM OF THE PAVEMENT BASE MATERIAL.
4. FOR TRENCHES, THE WIDTH SHALL BE WIDER THAN SHOWN IF REQUIRED FOR ADEQUATE SPACE TO ATTAIN THE SPECIFIED COMPACTION IN THE HAUNCH AND BEDDING ZONES.
5. COMPACT OUTER BEDDING AFTER PIPE IS PLACED AND PRIOR TO PLACEMENT OF SELECT FILL. MIDDLE BEDDING IS UNCOMPACTED.
6. OVERFILL (BACKFILL) SOILS TO BE PLACED PER STANDARD SPECIFICATION 02700 STORM DRAINAGE FOR THE APPLICABLE BACKFILL TYPE AND BURY LIMITATIONS.
7. THESE TWO TABLES WERE MODIFIED TO GENERALLY CONFORM TO THE NCDOT STANDARDS AS SHOWN IN DETAIL 300.01 RIGID PIPE IN TRENCH CONDITION.

REFERENCE SOURCES:
1. AMERICAN CONCRETE PIPE ASSOCIATION DESIGN STANDARDS
2. 2012 NCDOT STANDARD SPECIFICATIONS FOR ROADS AND STRUCTURES AND NCDOT STANDARD DETAILS 300.01 FOR RIGID PIPE, TRENCH CONDITIONS."

STORM DRAIN PIPE INSTALLATION

2 OF 3

FILL HEIGHT TABLE[a]

INSIDE PIPE DIAMETER Di (INCHES)	TYPE 3 (BEDDING) INSTALLATION (0.01 INCH CRACK) CLASS III PIPE MAXIMUM BURY H (FEET)	TYPE 3 CLASS IV PIPE MAXIMUM BURY H (FEET)	TYPE 4 (BEDDING) INSTALLATION (0.01 INCH CRACK) CLASS III PIPE MAXIMUM BURY H (FEET)	TYPE 4 CLASS IV PIPE MAXIMUM BURY H (FEET)
15	2 MIN, 12 MAX	1 MIN, 20 MAX	3 MIN, 7 MAX	2 MIN, 12 MAX
18	2 MIN, 12 MAX	1 MIN, 20 MAX	3 MIN, 7 MAX	1 MIN, 13 MAX
24	1 MIN, 12 MAX	1 MIN, 20 MAX	2 MIN, 8 MAX	1 MIN, 13 MAX
30	1 MIN, 12 MAX	1 MIN, 20 MAX	1 MIN, 8 MAX	1 MIN, 13 MAX
36	1 MIN, 12 MAX	1 MIN, 20 MAX	1 MIN, 8 MAX	1 MIN, 13 MAX
42	1 MIN, 12 MAX	1 MIN, 20 MAX	1 MIN, 8 MAX	1 MIN, 13 MAX
48	1 MIN, 12 MAX	1 MIN, 19 MAX	1 MIN, 8 MAX	1 MIN, 13 MAX
54	1 MIN, 12 MAX	1 MIN, 19 MAX	1 MIN, 8 MAX	1 MIN, 13 MAX
60	1 MIN, 12 MAX	1 MIN, 19 MAX	1 MIN, 8 MAX	1 MIN, 13 MAX
72	1 MIN, 11 MAX	1 MIN, 19 MAX	1 MIN, 7 MAX	1 MIN, 13 MAX

FILL HEIGHT TABLE BASE ON:
1. Ys = 120 PCF (BACKFILL LOAD)
2. AASHTO HL–93 LIVE LOAD
3. POSITIVE PROJECTING EMBANKMENT CONDITION (THIS GIVES CONSERVATIVE RESULTS IN COMPARISON TO TRENCH CONDITIONS)
4. PIPE = REINFORCED CONCRETE PIPE MEETING ASTM C76 (AASHTO M170), WALL C THICKNESS
5. CONCRETE PIPE SHOULD BE INSTALLED IN ACCORDANCE WITH AASHTO LRFD BRIDGE CONSTRUCTION SPECIFICATIONS SECTION 27 OR ASTM C1479.

a FILL HEIGHT TABLES, THE PORTION EXCERPTED HERE. WAS DEVELOPED BY THE AMERICAN CONCRETE PIPE ASSOCIATION (ACPA) USING THE INDIRECT DESIGN METHOD IN ACCORDANCE WITH SECTION 12.10.4.3 OF THE AASHTO LRFD BRIDGE DESIGN SPECIFICATION, 4TH, 2007 WITH 2008 INTERIM.

NOTES:
1. GREATER BURY DEPTHS THAN THOSE SHOWN ABOVE ARE ACHIEVABLE BY EITHER USING TYPE 1 OR 2 INSTALLATION, USING CLASS V PIPE, CONTROLLING BACKFILL TYPE, CALCULATING DEPTH USING A TRENCH CONDITION, OR BY SPECIAL DESIGN. SEE ALSO DESIGN DATA 9 PUBLISHED BY THE ACPA FOR DESIGN METHODOLOGY.
2. IN LIEU OF CALCULATING BURY DEPTH FOR OTHER CONDITIONS, FIRST SEE "LRFD FILL HEIGHT TABLES FOR CONCRETE PIPE", LAST REVISED JULY 2009 OR LATER), PREPARED BY THE ACPA FOR OTHER BURY DEPTH POSSIBILITIES

STORM DRAIN PIPE INSTALLATION

3 OF 3

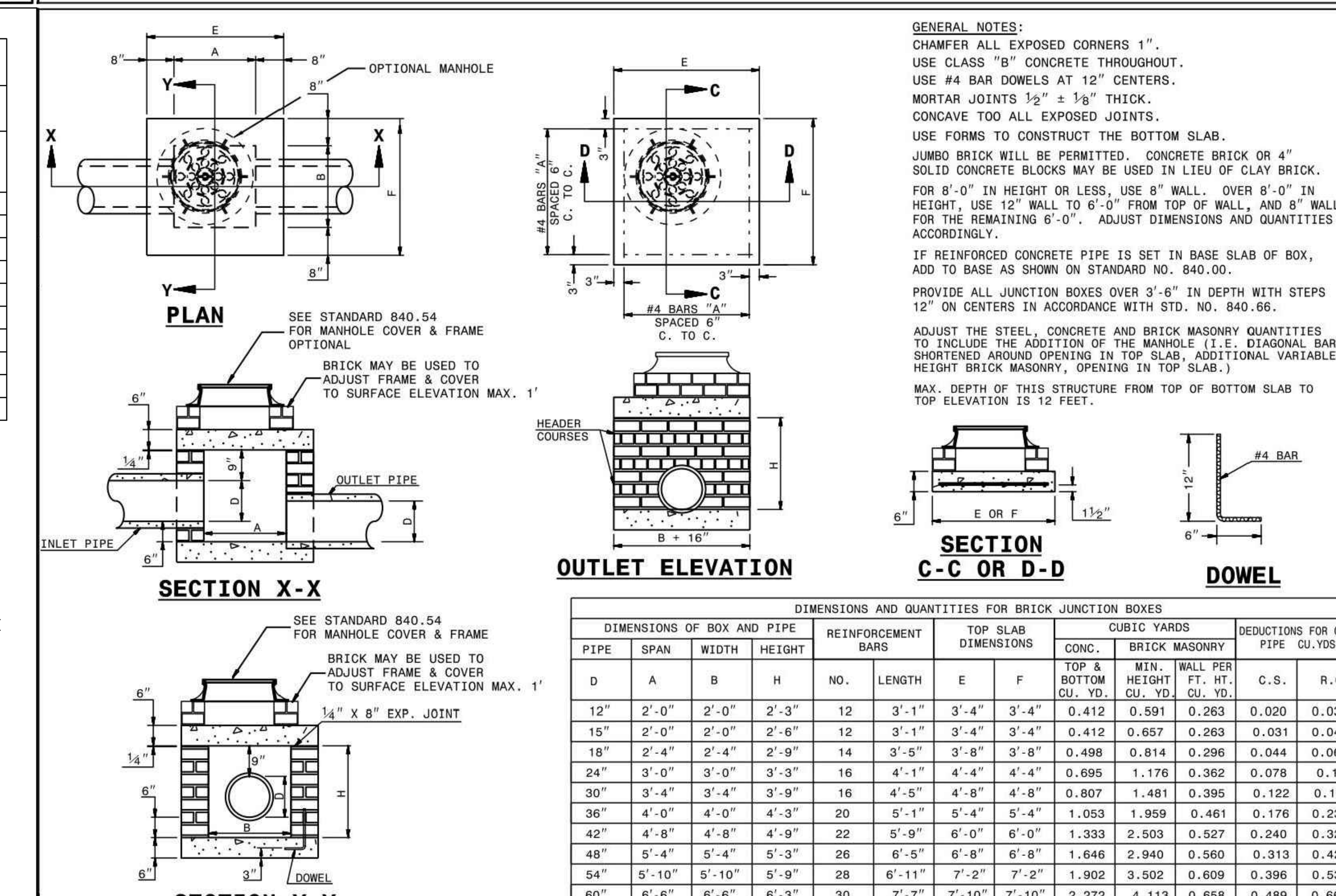

GENERAL NOTES:
CHAMFER ALL EXPOSED CORNERS 1".
USE CLASS "B" CONCRETE THROUGHOUT.
USE #4 BAR DOWELS AT 12" CENTERS.
MORTAR JOINTS ½" ± ⅛" THICK.
CONCAVE TOO ALL EXPOSED JOINTS.
USE FORMS TO CONSTRUCT THE BOTTOM SLAB.
JUMBO BRICK WILL BE PERMITTED. CONCRETE BRICK OR 4" SOLID CONCRETE BLOCKS MAY BE USED IN LIEU OF CLAY BRICK.
FOR 8'-0" IN HEIGHT OR LESS, USE 8" WALL. OVER 8'-0" IN HEIGHT, USE 12" WALL TO 6'-0" FROM TOP OF WALL, AND 8" WALL FOR THE REMAINING 6'-0". ADJUST DIMENSIONS AND QUANTITIES ACCORDINGLY.
IF REINFORCED CONCRETE PIPE IS SET IN BASE SLAB OF BOX, ADD TO BASE AS SHOWN ON STANDARD NO. 840.00.
PROVIDE ALL JUNCTION BOXES OVER 3'-6" IN DEPTH WITH STEPS 12" ON CENTERS IN ACCORDANCE WITH STD. NO. 840.66.
ADJUST THE STEEL, CONCRETE AND BRICK MASONRY QUANTITIES TO INCLUDE THE ADDITION OF THE MANHOLE (I.E. DIAGONAL BARS SHORTENED AROUND OPENING IN TOP SLAB, ADDITIONAL VARIABLE HEIGHT BRICK MASONRY, OPENING IN TOP SLAB.)
MAX. DEPTH OF THIS STRUCTURE FROM TOP OF BOTTOM SLAB TO TOP ELEVATION IS 12 FEET.

DIMENSIONS AND QUANTITIES FOR BRICK JUNCTION BOXES

PIPE D	SPAN A	WIDTH B	HEIGHT H	REINFORCEMENT BARS NO.	LENGTH	TOP SLAB E	TOP SLAB F	CONC. TOP & BOTTOM CU. YD.	BRICK MASONRY MIN. HEIGHT CU. YD.	WALL PER FT. HT. CU. YD.	DEDUCTIONS C.S.	R.C.
12"	2'-0"	2'-0"	2'-3"	12	3'-1"	3'-4"	3'-4"	0.412	0.591	0.263	0.020	0.032
15"	2'-0"	2'-0"	2'-6"	12	3'-1"	3'-4"	3'-4"	0.412	0.657	0.263	0.031	0.047
18"	2'-4"	2'-4"	2'-9"	14	3'-5"	3'-8"	3'-8"	0.498	0.814	0.296	0.044	0.065
24"	3'-0"	3'-0"	3'-3"	16	4'-1"	4'-4"	4'-4"	0.695	1.176	0.362	0.078	0.113
30"	3'-4"	3'-4"	3'-9"	16	4'-5"	4'-8"	4'-8"	0.807	1.481	0.395	0.122	0.170
36"	4'-0"	4'-0"	4'-3"	20	5'-1"	5'-4"	5'-4"	1.053	1.959	0.461	0.176	0.238
42"	4'-8"	4'-8"	4'-9"	22	5'-9"	6'-0"	6'-0"	1.333	2.503	0.527	0.240	0.323
48"	5'-4"	5'-4"	5'-3"	26	6'-5"	6'-8"	6'-8"	1.646	2.940	0.560	0.313	0.422
54"	5'-10"	5'-10"	5'-9"	28	6'-11"	7'-2"	7'-2"	1.902	3.502	0.609	0.396	0.535
60"	6'-6"	6'-6"	6'-3"	30	7'-7"	7'-10"	7'-10"	2.272	4.113	0.658	0.489	0.660
66"	7'-1"	7'-1"	6'-9"	32	8'-2"	8'-5"	8'-5"	2.624	4.778	0.708	0.591	0.798

STATE OF NORTH CAROLINA DEPT. OF TRANSPORTATION DIVISION OF HIGHWAYS RALEIGH, N.C.
1-18
ROADWAY STANDARD DRAWING FOR
BRICK JUNCTION BOX
(WITH OPTIONAL MANHOLE)
12" THRU 66" PIPE
SHEET 1 OF 1
840.32

FINAL DRAWING - NOT RELEASED FOR CONSTRUCTION

MCADAMS
The John R. McAdams Company, Inc.
2905 Meridian Parkway
Durham, NC 27713

phone 919. 361. 5000
fax 919. 361. 2269
license number: C-0293, C-187

www.mcadamsco.com

CLIENT

ASHTON WOODS
5711 SIX FORKS ROAD, SUITE 300
RALEIGH, NORTH CAROLINA 27609

ASHTON WOODS

THE POINT PHASES 11-13
CONSTRUCTION DRAWINGS
EAST YOUNG STREET
TOWN OF ROLESVILLE, WAKE FOREST TOWNSHIP, WAKE COUNTY, NORTH CAROLINA

CD XX-XX

NORTH CAROLINA PROFESSIONAL SEAL 22630 ENGINEER WILLIAM T. O'DANIEL
PRELIMINARY NOT FOR CONSTRUCTION

REVISIONS

NO. DATE

PLAN INFORMATION

PROJECT NO.	AWH-20000
FILENAME	AWH20000-CD-PKG-02-D1
CHECKED BY	.
DRAWN BY	.
SCALE	N.T.S.
DATE	10. 27. 2022

SHEET

STORM DRAINAGE DETAILS

C8.02

M:\Projects\AWH\AWH-20000\04-Production\Engineering\The Point North\Current Drawings\AWH20000-North-D1.dwg, 10/27/2022 8:51:40 AM, Sherrill Williams
M:\Projects\AWH\AWH-20000\04-Production\Engineering\The Point North\Current Drawings\AWH20000-North-D1.dwg, 10/27/2022 8:51:39 AM, Williams, 1:1

ROADWAY STANDARD DRAWING FOR TRAFFIC BEARING JUNCTION BOX FOR USE WITH PIPES 42" AND UNDER

STATE OF NORTH CAROLINA DEPT. OF TRANSPORTATION DIVISION OF HIGHWAYS RALEIGH, N.C. 1-18

GENERAL NOTES:

USE STANDARD OR JUMBO BRICK FOR WALL CONSTRUCTION. SOLID CONCRETE BRICK OR BLOCK ARE OPTIONAL WALL CONSTRUCTION MATERIAL

INCLUDE ALL ADJUSTMENTS TO WALLS, SLABS OR REINFORCING MATERIAL IN THE UNIT PRICE BID FOR EACH UNIT.

INSTALL OPTIONAL MANHOLE IN POSITION AS DIRECTED BY THE ENGINEER. CUT OR BEND ALL REBAR CROSSING THIS OPENING TO ALLOW 2" MINIMUM CONCRETE COVERAGE. ENCLOSE THE OPENING WITH 8 "A" BARS TIED TO TO THE REBAR MAT AND SET SO A MINIMUM OF 3" CONCRETE COVER IS ATTAINED. REFERENCE STD. NO. 840.54 FOR MANHOLE INFORMATION.

PROVIDE JUNCTION BOXES WITH MAHNOLES OVER 3'-6" IN DEPTH WITH STEPS PLACED ON 12" CENTERS. REFERENCE STD. NO. 840.66.

SPACE DOWEL "C" BARS AT A MAXIMUM OF 12" CENTERS.

MAXIMUM DEPTH OF THIS UNIT AS SHOWN IS 12'.

CONSTRUCT THE JUNCTION BOX IN ACCORDANCE WITH SECTIONS 830, 832, 834 AND 840 OF THE STANDARD SPECIFICATIONS.

BILL OF MATERIAL

BAR	QTY.	SIZE	LENGTH	WEIGHT
A	8	#5	1'-2"	9.7
B	14	#5	5'-6"	80.3
C	26	#4	1'-6"	26.1
Y	14	#5	6'-11⅜"	101.5
STEEL TOTAL WEIGHT				217.6
CU. YDS. CLASS "AA" CONC.				2.6
CU. YDS. BRICK/FT. HT. (8")				0.53
CU. YDS. BRICK/FT. HT. (12")				0.84

SHEET 2 OF 2 840.34

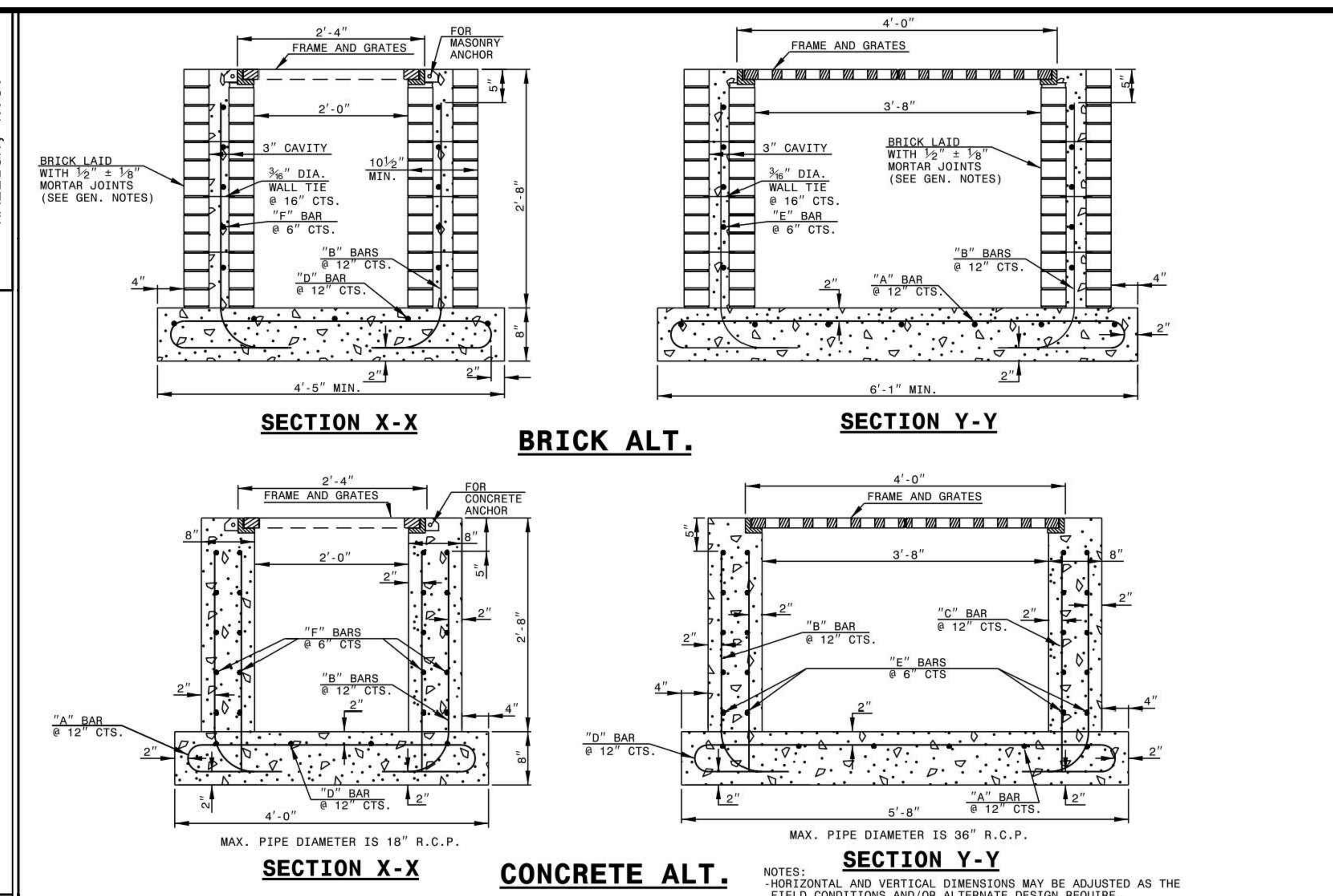

NOTES:
- HORIZONTAL AND VERTICAL DIMENSIONS MAY BE ADJUSTED AS THE FIELD CONDITIONS AND/OR ALTERNATE DESIGN REQUIRE.
- MAXIMUM HEIGHT FOR THIS STRUCTURE IS 14'-0".
- MAKE ALL ADJUSTMENTS AS DIRECTED BY THE ENGINEER.
- DEPTH OF STEEL GRATE WILL REQUIRE DEEPER SEAT ALONG SHORT WALLS.

ROADWAY STANDARD DRAWING FOR TRAFFIC BEARING GRATED DROP INLET FOR CAST IRON DOUBLE FRAME AND GRATES

STATE OF NORTH CAROLINA DEPT. OF TRANSPORTATION DIVISION OF HIGHWAYS RALEIGH, N.C. 1-18

SHEET 1 OF 2 840.35

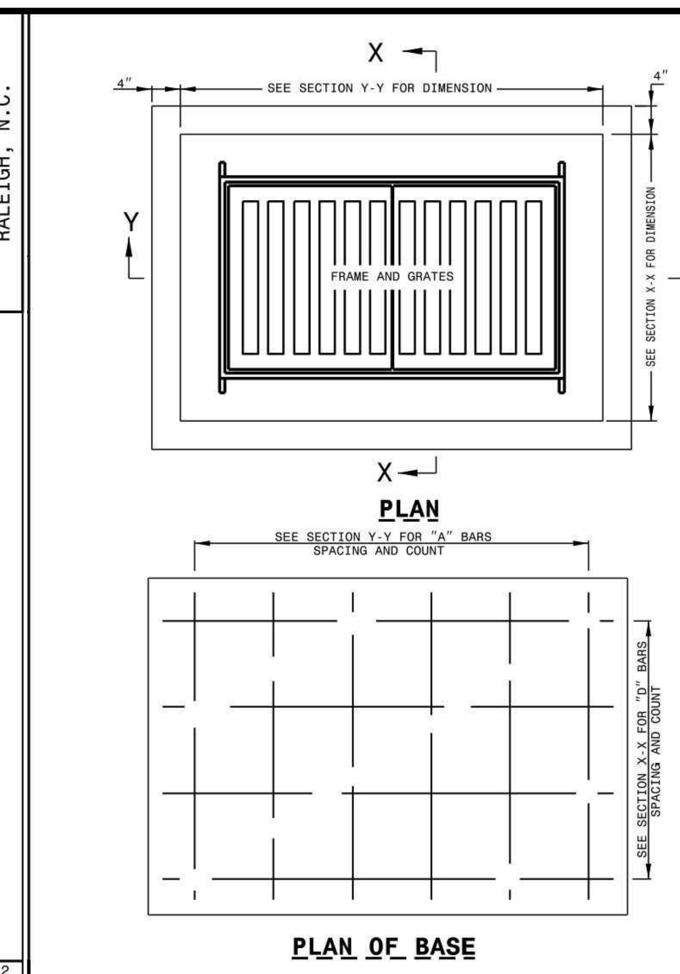

BILL OF MATERIALS

COMMON		CONCRETE ALT.			BRICK ALT.		
BAR	SIZE	LENGTH	QUANTITY	WEIGHT	LENGTH	QUANTITY	WEIGHT
A	#5	6'-4½"	6	39.9	7'-7½"	6	47.7
B	#5	3'-4½"	16	56.3	3'-4½"	16	56.3
C	#5	2'-8"	14	38.9	-0-	-0-	-0-
D	#5	8'-0½"	4	33.6	9'-3½"	4	38.8
E	#5	3'-0"	20	62.6	3'-0"	10	31.3
F	#5	4'-8"	20	97.3	4'-8"	10	48.7
REINF. STEEL (TOTAL WEIGHT LBS.)				328.6			222.8
CONCRETE IN BASE CLASS 'AA' (CUBIC YARDS)				0.56			0.66
CONCRETE IN WALLS CLASS 'AA' (CUBIC YARDS)				0.92			-0-
CONCRETE IN WALLS CLASS 'B' (CUBIC YARDS)				-0-			0.36
BRICK IN WALLS (CUBIC YARDS)				-0-			0.91
CONCRETE TOTAL (CUBIC YARDS)				1.48			1.02
BRICK & CONCRETE TOTAL (CUBIC YARDS)				1.48			1.93
CONC. CUBIC YARDS IN WALL/FOOT OF HEIGHT				0.35			0.14
BRICK CUBIC YARDS IN WALL/FOOT OF HEIGHT				-0-			0.34
LBS. OF REINF. STEEL IN WALL/FOOT OF HEIGHT				94.9			47.6

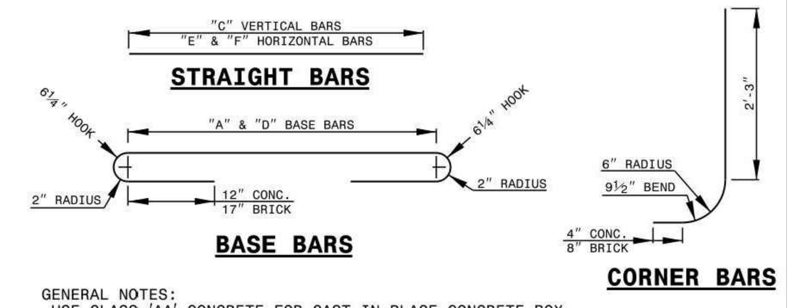

GENERAL NOTES:
- USE CLASS 'AA' CONCRETE FOR CAST IN PLACE CONCRETE BOX.
- USE CLASS 'B' CONCRETE IN THE WALL CAVITY FOR REINFORCED BRICK CONSTRUCTION AND CLASS 'AA' FOR THE FOOTING BASE.
- CHAMFER ALL EXPOSED CONCRETE CORNERS 1".
- USE FORMS TO CONSTRUCT THE BOTTOM SLAB.
- IF PIPES ARE SET IN THE BASE FOLLOW CONSTRUCTION PROCEDURES SHOWN BY STD. DWG. 840.00.
- PRECAST UNITS MADE OF CLASS 'AA' CONCRETE MAY BE USED IN LIEU OF BRICK MASONRY CONSTRUCTION.
- INCLUDE REINFORCING STEEL COST IN THE UNIT OR LINEAR FOOT BID PRICE FOR "MASONRY DRAINAGE STRUCTURE".
- REFERENCE STD. DWG. 840.25 FOR FRAME ANCHORAGE.
- CONCRETE BRICK, JUMBO BRICK AND 4" SOLID CONCRETE BLOCK WILL BE PERMITTED.
- CONCRETE FOR BRICK BOX REFER TO SECTION 832 OF THE STANDARD SPECIFICATIONS.
- PROVIDE GRATED DROP INLETS OVER 3'-6" DEEP WITH STEPS SPACED 12" ON CENTER AS DIRECTED BY STD. DWG. 840.66.
- FRAME AND GRATES ARE SEPARATE CONTRACT ITEMS.

SHEET 2 OF 2 840.35

ROADWAY STANDARD DRAWING FOR MANHOLE FRAME AND COVER

STATE OF NORTH CAROLINA DEPT. OF TRANSPORTATION DIVISION OF HIGHWAYS RALEIGH, N.C. 1-18

SOLID COVER SHOWN PERFORATED. PERFORATED AVAILABLE IF SPECIFIED.
STATE USE OF SYSTEM ON COVER
(I.E.: SEWER, STORM DRAIN, ELECTRICAL)

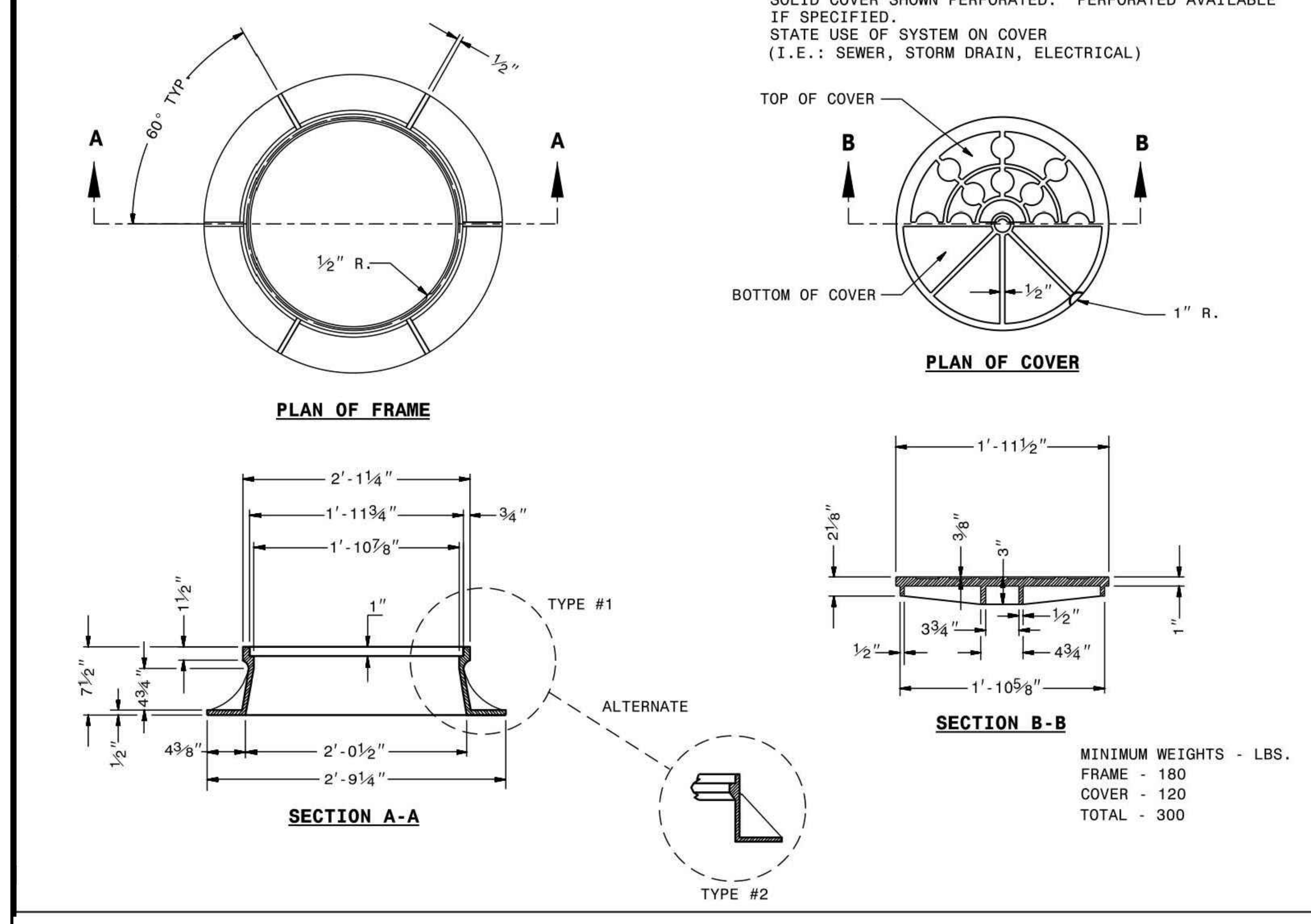

MINIMUM WEIGHTS - LBS.
FRAME - 180
COVER - 120
TOTAL - 300

SHEET 1 OF 1 840.54

ROADWAY STANDARD DRAWING FOR DRAINAGE STRUCTURE STEPS

STATE OF NORTH CAROLINA DEPT. OF TRANSPORTATION DIVISION OF HIGHWAYS RALEIGH, N.C. 1-18

NOTES:
INSTALL ALL STEPS PROTRUDING 4" FROM INSIDE FACE OF STRUCTURE WALL.
STEPS DIFFERING IN DIMENSIONS, CONFIGURATION, OR MATERIALS FROM THOSE SHOWN MAY ALSO BE USED PROVIDED THE CONTRACTOR HAS FURNISHED THE ENGINEER WITH DETAILS OF THE PROPOSED STEPS AND HAS RECEIVED WRITTEN APPROVAL FROM THE ENGINEER FOR THE USE OF SUCH STEPS.

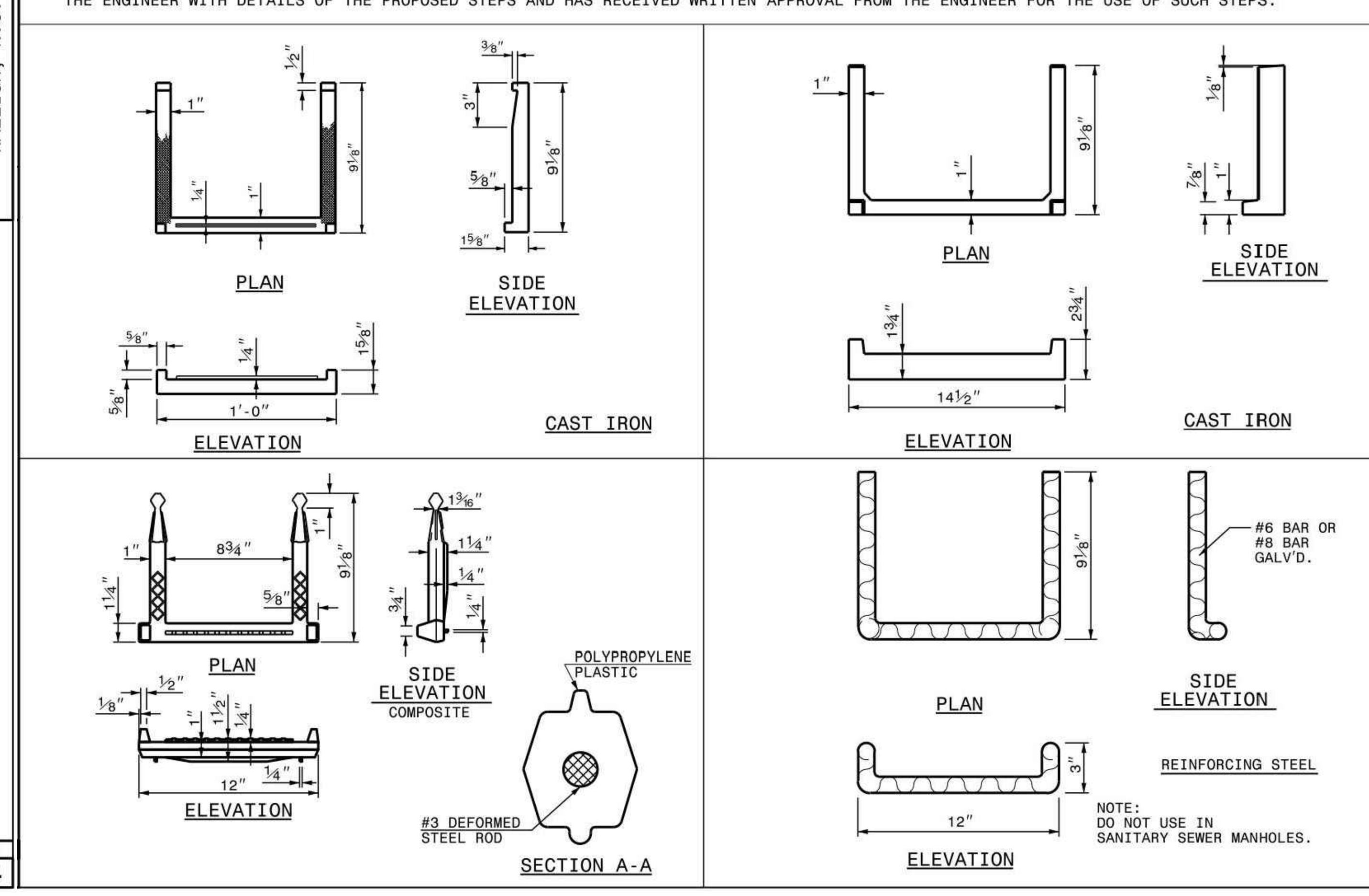

NOTE:
DO NOT USE IN SANITARY SEWER MANHOLES.

SHEET 1 OF 1 840.66

ROADWAY STANDARD DRAWING FOR DROP INLET FRAME AND GRATES FOR USE WITH STD. DWG.S 840.14 AND 840.15

STATE OF NORTH CAROLINA DEPT. OF TRANSPORTATION DIVISION OF HIGHWAYS RALEIGH, N.C. 1-18

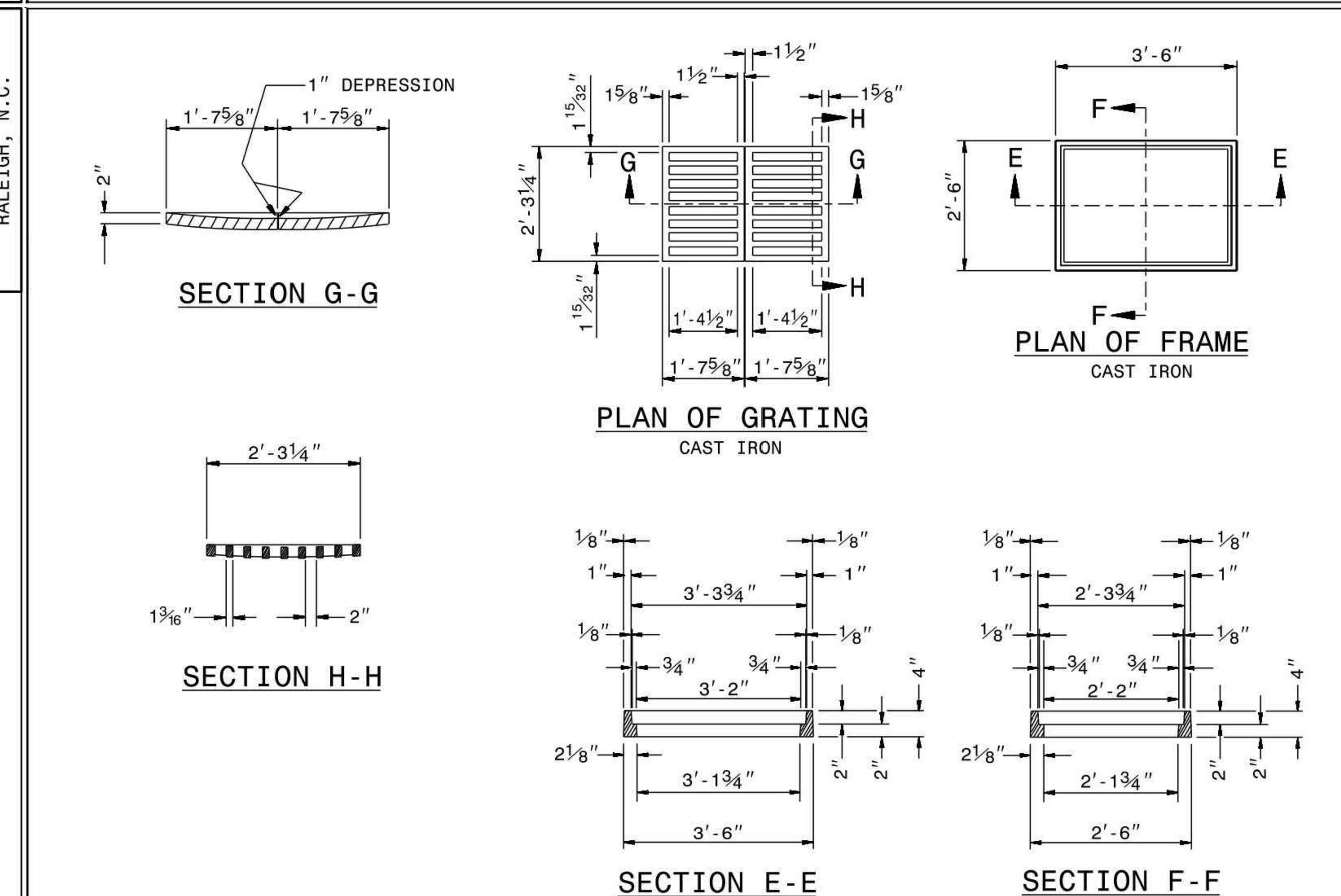

SHEET 1 OF 1 840.16

Section 2721

Engineered Surface Drainage Products

GENERAL
PVC surface drainage inlets shall include the drain basin type as indicated on the contract drawing and referenced within the contract specifications. The ductile iron grates for each of these fittings are to be considered an integral part of the surface drainage inlet and shall be furnished by the same manufacturer. The surface drainage inlets shall be as manufactured by Nyloplast a division of Advanced Drainage Systems, Inc., or prior approved equal.

MATERIALS
The drain basins required for this contract shall be manufactured from PVC pipe stock, utilizing a thermoforming process to reform the pipe stock to the specified configuration. The drainage pipe connection stubs shall be manufactured from PVC pipe stock and formed to provide a watertight connection with the specified pipe system. This joint tightness shall conform to ASTM D3212 for joints for drain and sewer plastic pipe using flexible elastomeric seals. The flexible elastomeric seals shall conform to ASTM F477. The pipe bell spigot shall be joined to the main body of the drain basin or catch basin. The raw material used to manufacture the pipe stock that is used to manufacture the main body and pipe stubs of the surface drainage inlets shall conform to ASTM D1784 cell class 12454.

The grates and frames furnished for all surface drainage inlets shall be ductile iron for sizes 8", 10", 12", 15", 18", 24" and 30" and shall be made specifically for each basin so as to provide a round bottom flange that closely matches the diameter of the surface drainage inlet. Grates for drain basins shall be capable of supporting various wheel loads as specified by Nyloplast. 12" and 15" square grates will be hinged to the frame using pins. Ductile iron used in the manufacture of the castings shall conform to ASTM A536 grade 70-50-05. Grates and covers shall be provided painted black.

INSTALLATION
The specified PVC surface drainage inlet shall be installed using conventional flexible pipe backfill materials and procedures. The backfill material shall be crushed stone or other granular material meeting the requirements of class 1, class 2, or class 3 material as defined in ASTM D2321. Bedding and backfill for surface drainage inlets shall be well placed and compacted uniformly in accordance with ASTM D2321. The drain basin body will be cut at the time of the final grade. No brick, stone or concrete block will be required to set the grate to the final grade height. For load rated installations, a concrete slab shall be poured under and around the grate and frame. The concrete slab must be designed taking into consideration local soil conditions, traffic loading, and other applicable design factors. For other installation considerations such as migration of fines, ground water, and soft foundations refer to ASTM D2321 guidelines.

Nyloplast — 3130 VERONA AVE BUFORD, GA 30518 PHN (770) 932-2443 FAX (770) 932-2490 www.nyloplast-us.com — DRAWN BY CJA, DATE 3-10-00, REVISED BY NMH, DATE 03-11-16 — TITLE: 8 IN - 30 IN DRAIN BASIN SPECIFICATIONS — DWG SIZE A, SCALE 1:1, SHEET 1 OF 1, DWG NO. 7001-110-011, REV H

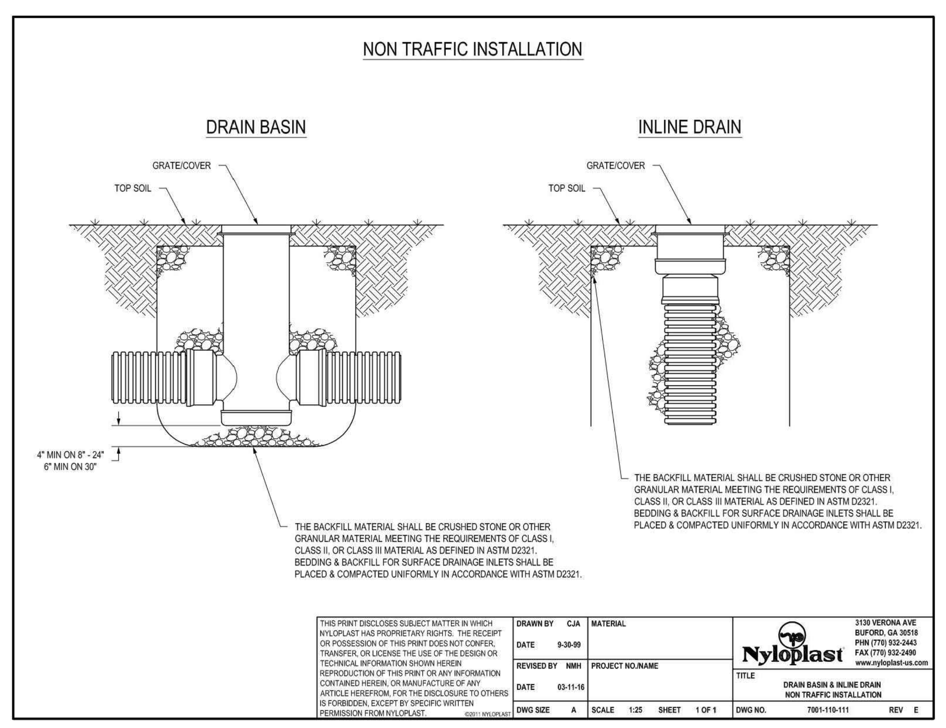

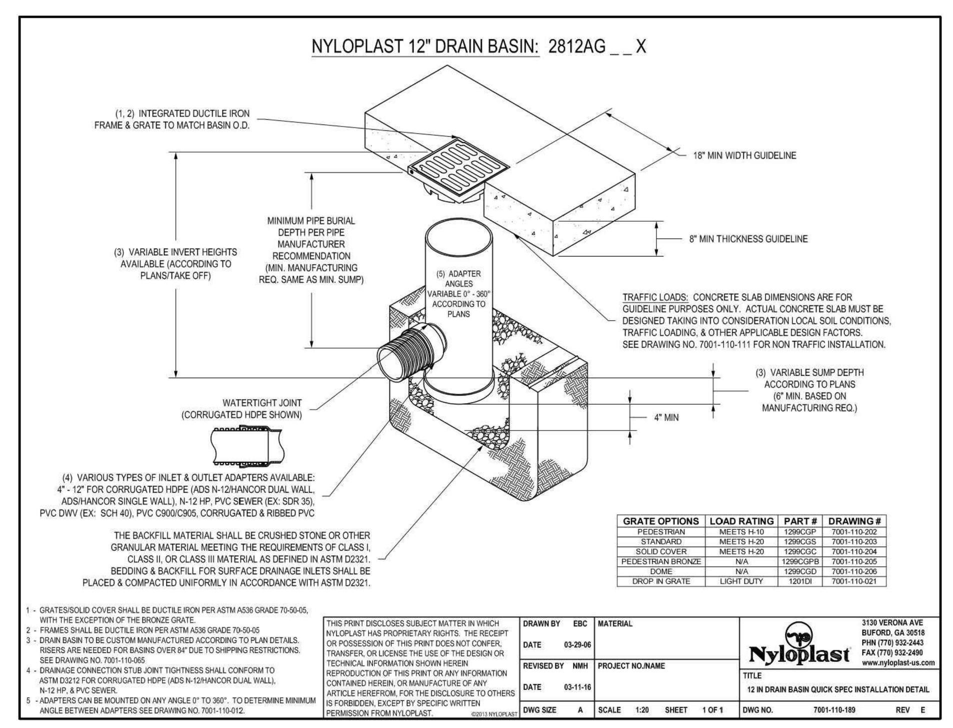

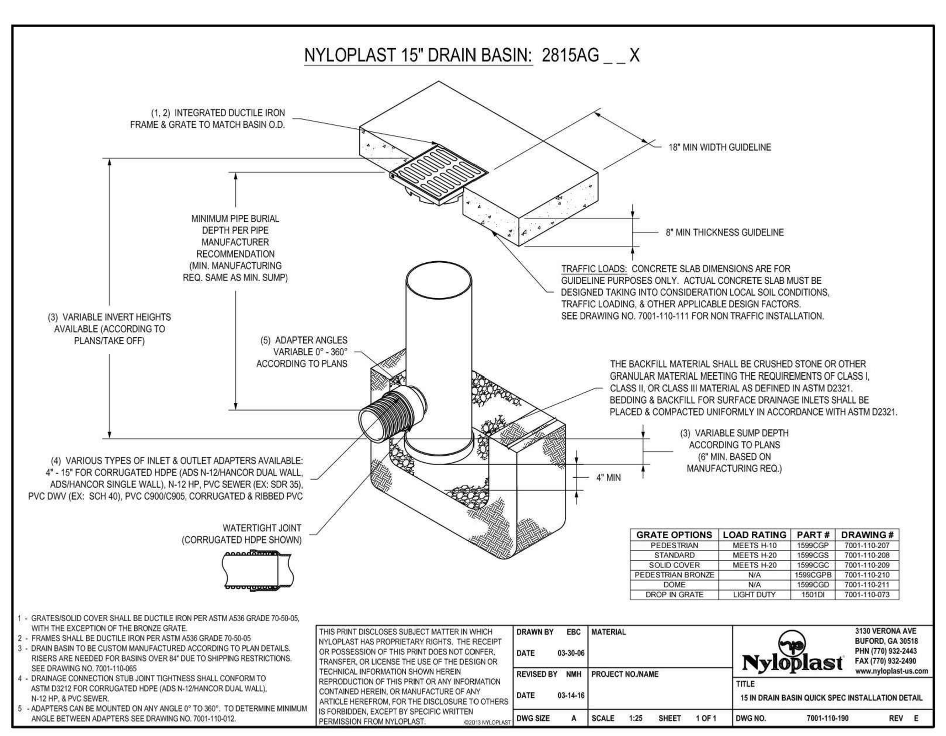

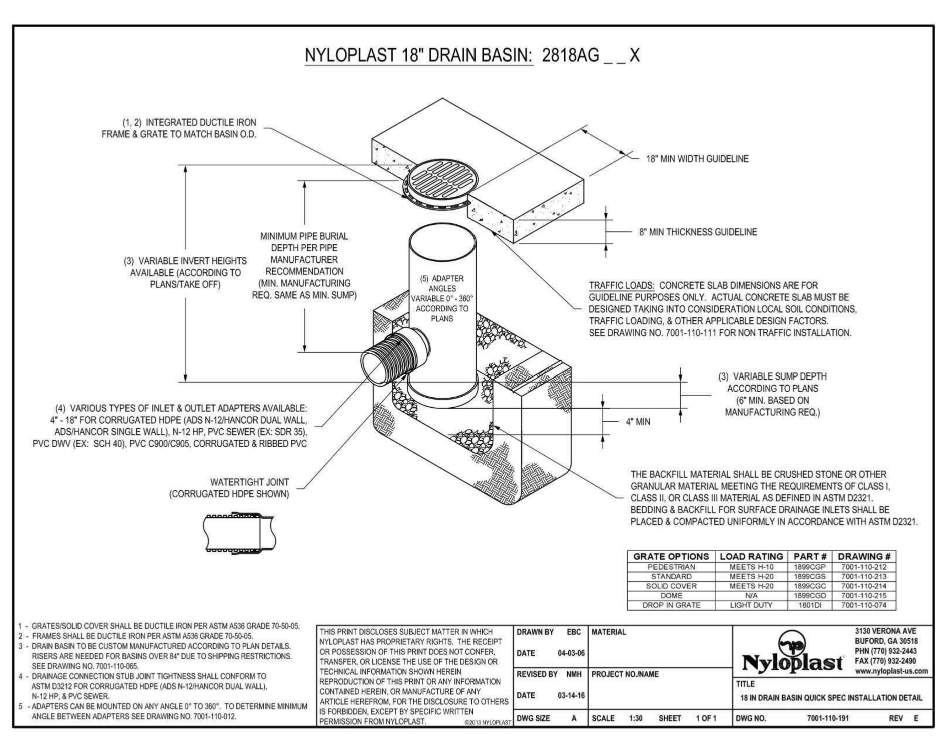

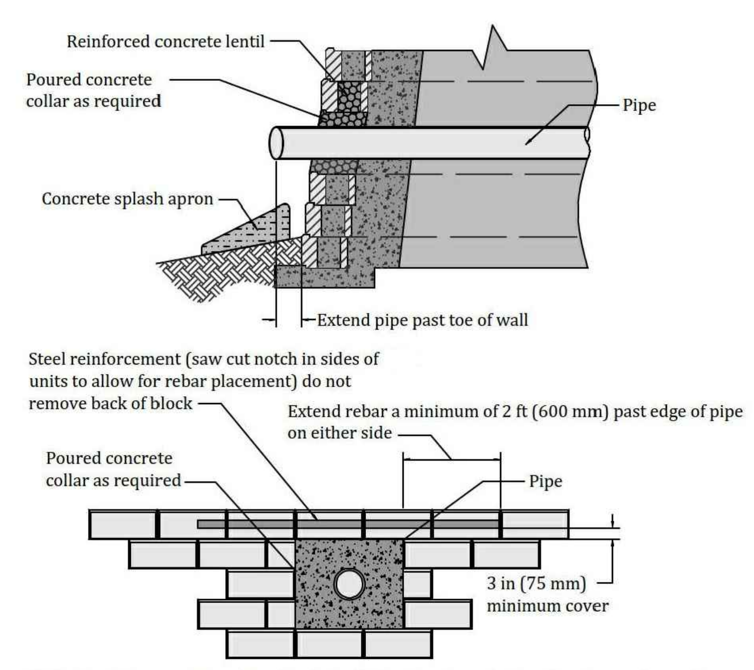

** Steel reinforcement is optional and should be placed per design of engineer of record

STORM PIPE THROUGH WALL DETAIL
Not To Scale

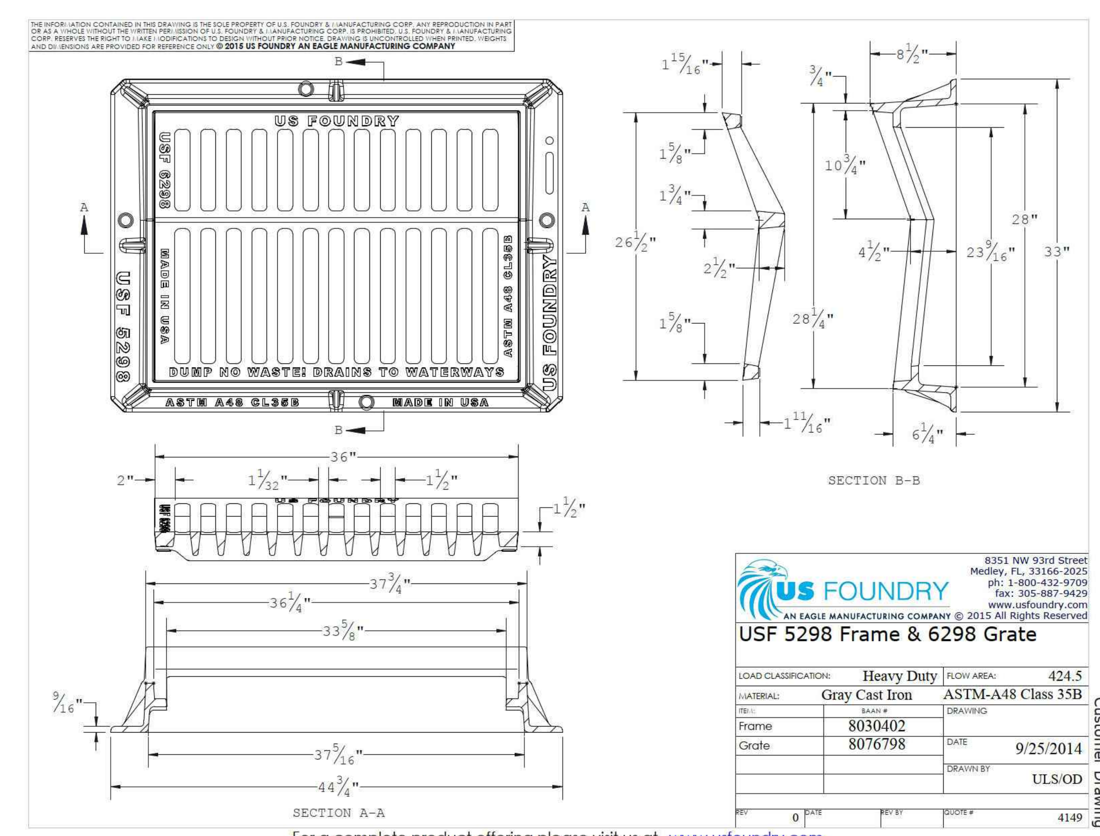

For a complete product offering please visit us at www.usfoundry.com

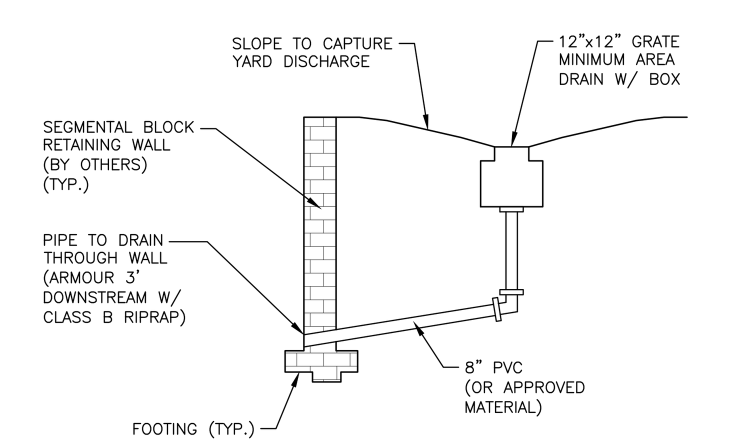

WALL DRAIN INLET DETAIL
N.T.S.

FINAL DRAWING - NOT RELEASED FOR CONSTRUCTION

MCADAMS
The John R. McAdams Company, Inc.
2905 Meridian Parkway
Durham, NC 27713
phone 919. 361. 5000
fax 919. 361. 2269
license number: C-0293, C-187
www.mcadamsco.com

CLIENT

ASHTON WOODS
5711 SIX FORKS ROAD, SUITE 300
RALEIGH, NORTH CAROLINA 27609

THE POINT PHASES 11-13
CONSTRUCTION DRAWINGS
EAST YOUNG STREET
TOWN OF ROLESVILLE, WAKE FOREST TOWNSHIP, WAKE COUNTY, NORTH CAROLINA

CD XX-XX

NORTH CAROLINA PROFESSIONAL SEAL 22630 ENGINEER WILLIAM T. O'DANIEL — PRELIMINARY NOT FOR CONSTRUCTION

REVISIONS

NO. DATE

PLAN INFORMATION

PROJECT NO.	AWH-20000
FILENAME	AWH20000-CD-PKG-02-D1
CHECKED BY	.
DRAWN BY	.
SCALE	N.T.S.
DATE	10. 27. 2022

SHEET

STORM DRAINAGE DETAILS

C8.03

M:\Projects\AWH\AWH-20000\04-Production\Engineering\The Point North\Current Drawings\AWH20000-North-D1.dwg, 10/27/2022 8:51:52 AM, Sherrill Williams
M:\Projects\AWH\AWH-20000\04-Production\Engineering\The Point North\Current Drawings\AWH20000-North-D1.dwg, 10/27/2022 8:51:51 AM, Williams, 1:1

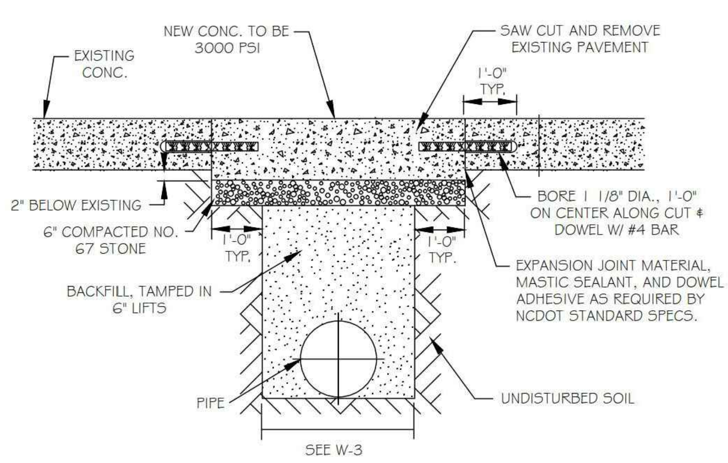

NOTES:
1. SEE CITY OF RALEIGH STANDARDS FOR TRENCHES AND PIPE BEDDING W-3 FOR ADDITIONAL DETAILS
2. PAVEMENT CUTS WITHIN NCDOT ROW SHALL CONFORM TO THE APPROVED ON SITE ENCROACHMENT PERMIT.
3. THE PAVEMENT CUT SHALL BE DEFINED BY A STRAIGHT EDGE AND CUT WITH AN APPROVED SAW CUT MACHINE.
4. THE TRENCH SUBGRADE MATERIAL SHALL BE BACKFILLED WITH SUITABLE MATERIAL AND COMPACTED TO A DENSITY OF AT LEAST 95% OF THAT OBTAINED BY COMPACTING A SAMPLE OF THE MATERIAL IN ACCORDANCE WITH AASHTO T-99 AS MODIFIED BY NCDOT. 5. THE FINAL 6" OF FILL SHALL CONSIST OF ABC MATERAIL COMPACTED TO A DENSITY EQUAL TO 100% OF THAT OBTAINED BY COMPACTING A SAMPLE OF THE MATERIAL IN ACCORDANCE WITH AASHTO T-80 AS MODIFIED BY NCDOT .

CITY OF RALEIGH
DEPARTMENT OF PUBLIC UTILITIES
STANDARD CONCRETE PAVEMENT PATCH DETAIL

DWG. NO.	REVISIONS	DATE	REVISIONS	DATE
W-1	RRH	3-31-00	A.B.B.	10-29-10
	A.B.B.	2-8-05	MAB	10-31-13

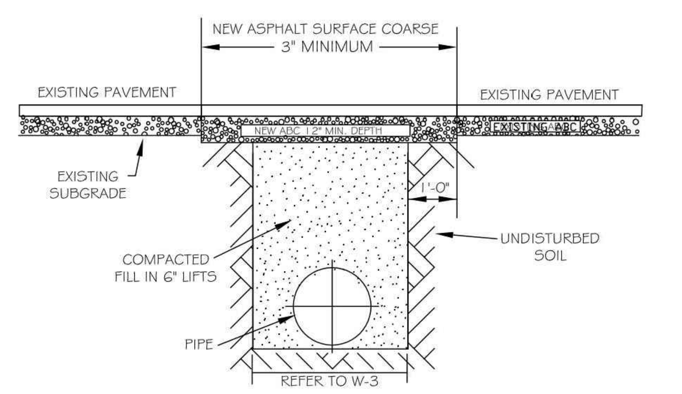

NOTES:
1. THE PAVEMENT CUT SHALL BE DEFINED BY A STRAIGHT EDGE AND CUT WITH AN APPROPRIATE SAW CUT MACHINE.
2. THE TRENCH SUBGRADE MATERIAL SHALL BE BACKFILLED WITH SUITABLE MATERIAL AND COMPACTED TO A DENSITY OF AT LEAST 95% OF THAT OBTAINED BY COMPACTING A SAMPLE OF THE MATERIAL IN ACCORDANCE WITH AASHTO T-99 AS MODIFIED BY NCDOT.
3. THE FINAL 1' OF FILL SHALL CONSIST OF ABC MATERIAL COMPACTED TO A DENSITY EQUAL TO 100% OF THAT OBTAINED BY COMPACTING A SAMPLE OF THE MATERIAL IN ACCORDANCE WITH AASHTO T-80 AS MODIFIED BY NCDOT.
4. THE ENTIRE THICKNESS/ VERTICAL EDGE OF CUT SHALL BE TACKED.
5. THE SAME DEPTH OF PAVEMENT MATERIAL WHICH EXISTS SHALL BE REINSTALLED, BUT IN NO CASE SHALL THE ASPHALT BE LESS THAN 3" THICK.
6. THE ASPHALT PAVEMENT MATERIAL SHALL BE INSTALLED AND COMPACTED THOROUGHLY WITH A SMOOTH DRUM ROLLER TO ACHIEVE A SMOOTH LEVEL PATCH.
7. REFER TO CITY OF RALEIGH STANDARDS FOR TRENCHES AND PIPE BEDDING, W-3. FOR ADDITIONAL DETAILS.
8. NO HAND PATCHING ALLOWED.
9. PAVEMENT CUTS WITHIN NCDOT ROW SHALL CONFORM TO THE APPROVED ON SITE ENCROACHMENT PERMIT.

CITY OF RALEIGH
DEPARTMENT OF PUBLIC UTILITIES
STANDARD ASPHALT PAVEMENT PATCH DETAIL

DWG. NO.	REVISIONS	DATE	REVISIONS	DATE
W-2	RRH	3-31-00	A.B.B.	4-16-04
	D.W.C.	11-1-99	J.P.S.	10-29-10

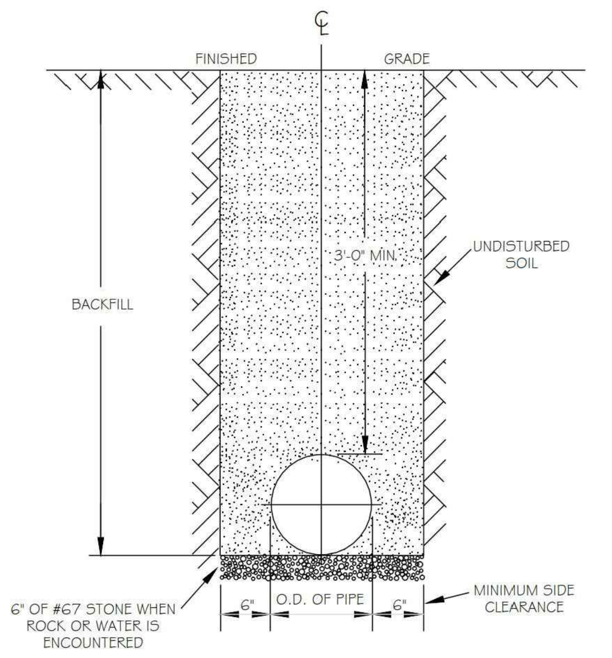

NOTES:
1. TRENCHES REQUIRING SHORING AND BRACING, DIMENSIONS SHALL BE TAKEN FROM THE INSIDE FACE OF THE SHORING AND BRACING.
2. NO ROCKS OR BOULDERS 4" OR LARGER TO BE USED IN BACKFILL.
3. ALL BACKFILL MATERIAL SHALL BE SUITABLE NATIVE MATERIAL.
4. BACKFILL SHALL BE TAMPED IN 6" LIFTS.
5. ACHIEVE 95% COMPACTION IN BACKFILL.

CITY OF RALEIGH
DEPARTMENT OF PUBLIC UTILITIES
TRENCH BOTTOM DIMENSIONS & BACKFILLING REQUIREMENTS FOR DUCTILE IRON

DWG. NO.	REVISIONS	DATE	REVISIONS	DATE
W-3	D.W.C.	9-3-99	ABB	2-15-05
	RRH	3-31-00	J.P.S.	10-29-10

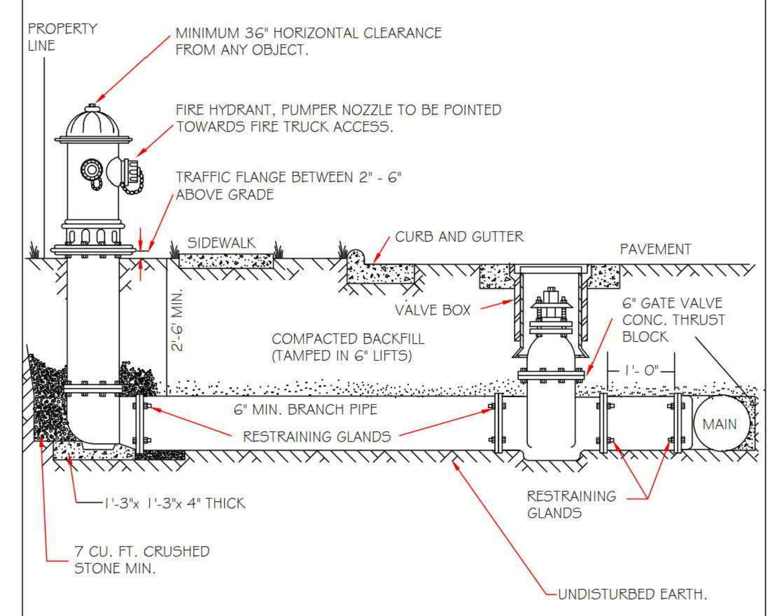

NOTES:
1. FIRE HYDRANT SHALL BE AS MANUFACTURED: MUELLER, AMERICAN DARLING, KENNEDY, M&H, WATEROUS, CLOW, EAST JORDAN IRON WORKS, OR US PIPE.
2. BRANCH PIPE SHALL BE DUCTILE IRON AWWA C150-96
3. 6" GATE VALVE SHALL BE AWWA C500-86 OPEN LEFT
4. STEEL RODS AND BOLTS SHALL BE ¾" HOT DIPPED GALVANIZED
5. FIRE HYDRANTS WILL BE INSTALLED IN TRUE VERTICAL POSITION
RODS SHALL NOT BE COUPLED MORE THAN ONCE. IF THE LENGTH FROM THE VALVE TO THE HYDRANT EXCEEDS 20' THEN A MECHANICAL RESTRAINING GLAND WITH A REBAR CAGE SHALL BE INSTALLED NO MORE THAN 10' FROM HYDRANT AND POURED IN CONCRETE.
FIRE HYDRANTS TO BE LOCATED IN ROW OR 2 FOOT EASEMENT ADJACENT TO ROW

ANYTIME SITE WORK, CONSTRUCTION, ROAD WORK, OR ANY OTHER WORK CHANGES THE GRADE OF THE FIRE HYDRANT, THE PERSON RESPONSIBLE FOR THE WORK IS RESPONSIBLE FOR ADJUSTING THE FIRE HYDRANT TO STAY WITHIN COMPLIANCE.

CITY OF RALEIGH
DEPARTMENT OF PUBLIC UTILITIES
STANDARD FIRE HYDRANT INSTALLATION DETAIL

DWG. NO.	REVISIONS	DATE	REVISIONS	DATE
W-4	ABB	4-6-04	PAP	2/17/09
	DHL	2/14/08		

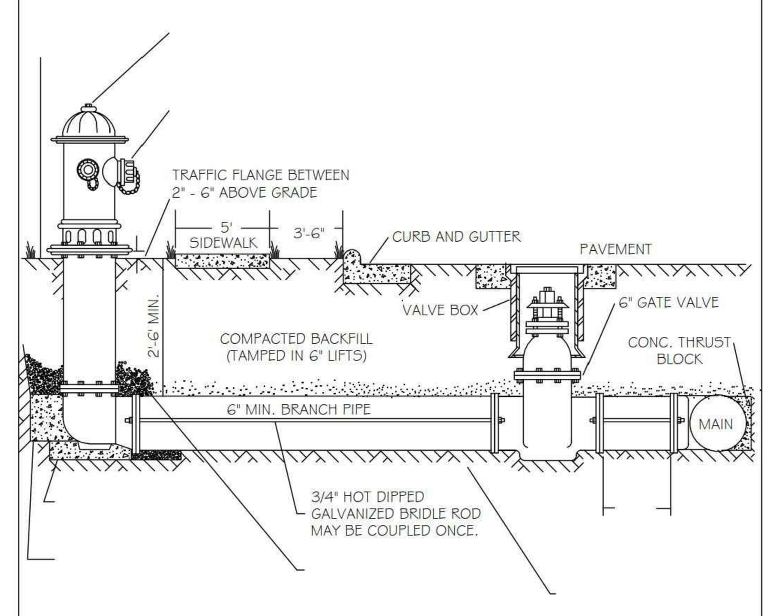

NOTES:
1. FIRE HYDRANT SHALL BE AS MANUFACTURED: MUELLER, AMERICAN DARLING, KENNEDY, M&H, WATEROUS, CLOW, EAST JORDAN IRON WORKS, OR US PIPE.
2. BRANCH PIPE SHALL BE DUCTILE IRON AWWA C150-96
3. 6" GATE VALVE SHALL BE AWWA C500-86 OPEN LEFT
4. STEEL RODS AND BOLTS SHALL BE ¾" HOT DIPPED GALVANIZED
5. FIRE HYDRANTS WILL BE INSTALLED IN TRUE VERTICAL POSITION
RODS SHALL NOT BE COUPLED MORE THAN ONCE. IF THE LENGTH FROM THE VALVE TO THE HYDRANT EXCEEDS 20' THEN A MECHANICAL RESTRAINING GLAND WITH A REBAR CAGE SHALL BE INSTALLED NO MORE THAN 10' FROM HYDRANT AND POURED IN CONCRETE.
FIRE HYDRANTS TO BE LOCATED IN ROW OR 2 FOOT EASEMENT ADJACENT TO ROW

ANYTIME SITE WORK, CONSTRUCTION, ROAD WORK, OR ANY OTHER WORK CHANGES THE GRADE OF THE FIRE HYDRANT, THE PERSON RESPONSIBLE FOR THE WORK IS RESPONSIBLE FOR ADJUSTING THE FIRE HYDRANT TO STAY WITHIN COMPLIANCE.

CITY OF RALEIGH
DEPARTMENT OF PUBLIC UTILITIES
STANDARD FIRE HYDRANT INSTALLATION DETAIL

DWG. NO.	REVISIONS	DATE	REVISIONS	DATE
W-4a	ABB	4-6-04		

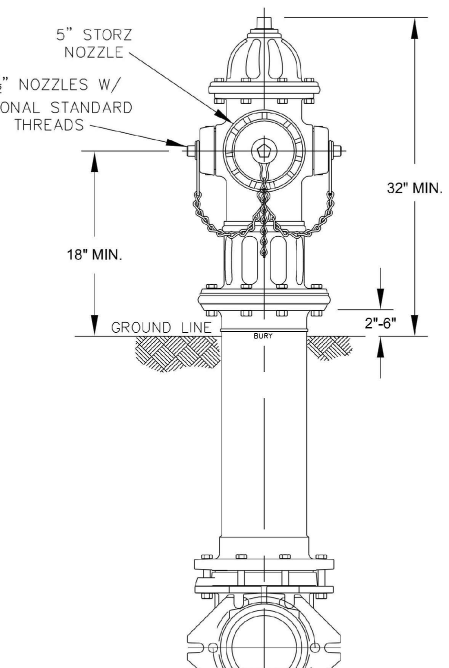

NOTES:
1. ALL PUBLIC FIRE HYDRANTS IN THE CITY OF RALEIGH AND THE MERGER TOWNS OF GARNER, ROLESVILLE, WAKE FOREST, KNIGHTDALE, WENDELL AND ZEBULON SHALL BE PAINTED CHROME YELLOW WITH HIGH REFLECTIVE ALUMINUM SILVER CAPS, BONNETS AND OPERATING NUTS.
2. ALL PRIVATE FIRE HYDRANTS SHALL BE RED.

CITY OF RALEIGH
DEPARTMENT OF PUBLIC UTILITIES
RALEIGH, GARNER, KNIGHTDALE, ROLESVILLE, WAKE FOREST, WENDELL & ZEBULON
STANDARD FIRE HYDRANT WITH 5" STORZ PUMPER NOZZLE

DWG. NO.	REVISIONS	DATE	REVISIONS	DATE
W-5	MAB	6-30-16		
	KAT	9-15-17		

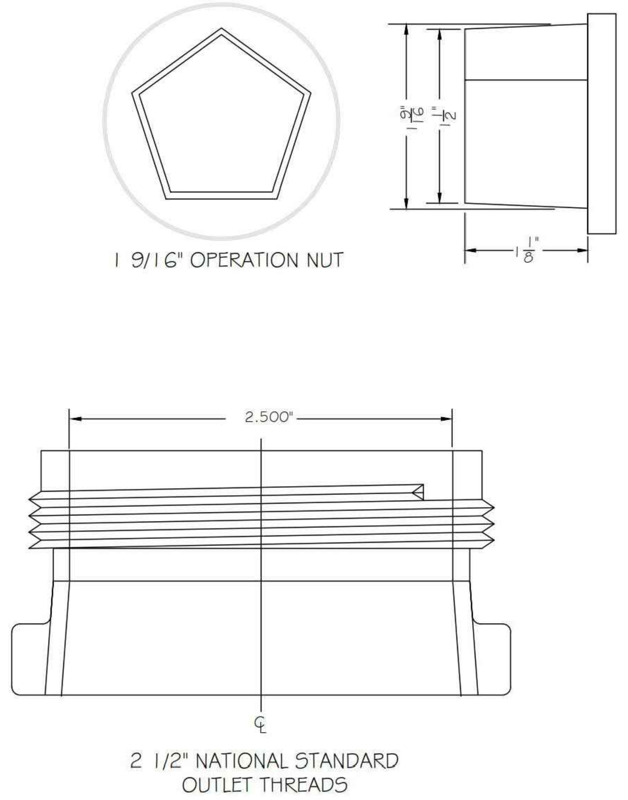

CITY OF RALEIGH
DEPARTMENT OF PUBLIC UTILITIES
HYDRANT OPERATING NUT AND 2 1/2" OUTLET THREADS

DWG. NO.	REVISIONS	DATE	REVISIONS	DATE
W-6	RRH	3-31-00	DHL	2-18-08
	A.B.B	4-13-04	J.P.S	11-1-10

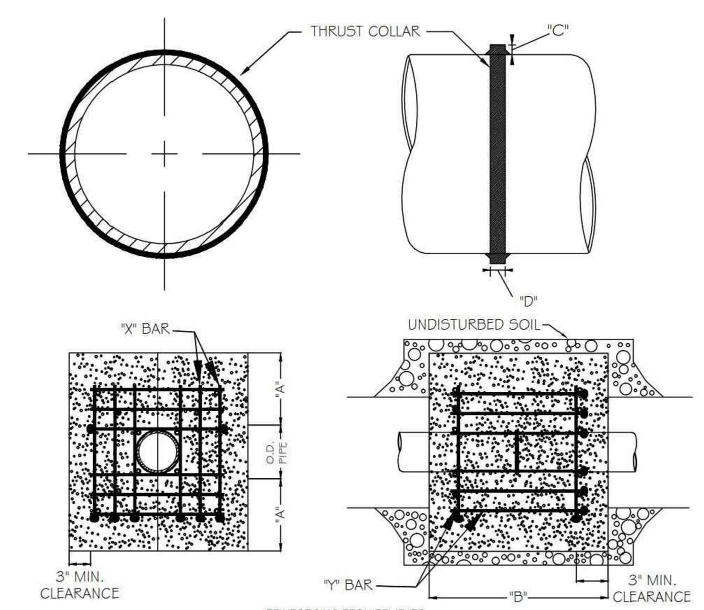

REINFORCING REQUIREMENTS

I.D. PIPE	REBAR SIZE	"X" BAR LENGTH	"X" BAR WEIGHT	"Y" BAR LENGTH	"Y" BAR WEIGHT	NO. REQUIRED
6" - 36"	#5	2'-2"+ O.D. PIPE	1.043 LBS/FT	1'-1"	1.1 LBS. EACH	X-24, Y-12
48" & greater	#6	3'-0"+ O.D. PIPE	1.502 LBS/FT	1'-3"	1.9 LBS. EACH	X-24, Y-12

THRUST COLLAR, AND THRUST SCHEDULE

I.D. PIPE	"A"	"B"	"C"	"D"
6" - 16"	1'-4"	1'-7"	2"	3/8"
20" - 24"	1'-4"	1'-7"	3"	1/2"
30" - 36"	1'-4"	1'-7"	4"	5/8"
48" & greater	1'-8"	1'-9"	6"	7/8"

NOTES:
1. SEE STANDARD DETAIL W-9 FOR THRUST BLOCK LOCATIONS.
2. CONCRETE SHALL BE 3000 PSI AND TRANSIT MIXED.
3. REINFORCING BARS SHALL BE DEFORMED AND TIED TOGETHER.
4. TRENCH BOTTOM WIDTH IN VICINITY OF THRUST BLOCK INSTALLATION SHALL BE THE MINIMUM WIDTH AS SHOWN ON STANDARD DETAIL W-3.
5. BACKFILL TAMPED IN 6" LIFTS PER STANDARD DETAIL W-3.
6. THRUST COLLAR MUST BE FACTORY WELDED ON BOTH SIDES ALONG BOTH EDGES OF COLLAR AROUND CIRCUMFERENCE.

CITY OF RALEIGH
DEPARTMENT OF PUBLIC UTILITIES
THRUST BLOCKING DESIGN DATA FOR WATER MAINS

DWG. NO.	REVISIONS	DATE	REVISIONS	DATE
W-7	RRH	1-21-00	J.P.S.	11-1-10
	D.H.L.	6-18-08		

REACTION BEARING AREAS FOR HORIZONTAL WATER PIPE BENDS
BASED ON TEST PRESSURE OF 200 P.S.I.
ALL AREAS GIVEN IN SQUARE FEET.

SIZE AND DEGREE OF BEND	STATIC THRUST IN POUNDS	MODERATELY DRY CLAY 4000 LBS/FT²	SOFT CLAY 2000 LBS/FT²	1600 LBS/FT² GRAVEL / COARSE SAND	8000 LBS/FT² DRY CLAY - ALWAYS DRY	SAND, COMPACT FIRM 8000 LBS/FT²	SAND -CLEAN DRY 4000 LBS/FT²	SOIL 1000 LBS/FT² QUICKSAND - VERY POOR	ROCK - POOR 10,000 LBS/FT²
6"									
11 1/4°	1,108	1	1	1	1	1	1	2	1
22 1/2°	2,207	1	2	2	1	1	1	3	1
45°	4,328	2	3	3	1	1	2	5	1
90°	7,996	2	4	5	1	1	2	8	1
PLUG	5,655	2	3	4	1	1	2	6	1
8"									
11 1/4°	1,970	1	1	2	1	1	1	2	1
22 1/2°	3,922	1	2	3	1	1	1	4	1
45°	7,694	2	4	5	1	1	2	8	1
90°	14,215	4	8	9	2	2	4	15	2
PLUG	10,053	3	5	6	2	2	3	10	1
12"									
11 1/4°	4,433	2	3	3	1	1	2	5	1
22 1/2°	8,826	3	5	6	2	2	3	9	1
45°	17,312	5	9	11	3	3	5	18	2
90°	31,983	8	16	19	4	4	8	32	4
PLUG	22,619	6	12	14	3	3	6	23	3
16"									
11 1/4°	7,881	2	4	5	1	1	2	8	1
22 1/2°	15,691	4	8	10	2	2	4	16	2
45°	30,779	8	16	19	4	4	8	31	4
90°	56,861	15	29	35	8	8	15	57	6
PLUG	40,213	10	21	25	5	5	10	41	5

REACTION BEARING AREAS ARE IN SQUARE FEET MEASURED IN A VERTICAL PLANE IN THE TRENCH SIDE AT AN ANGLE OF 90° TO THE THRUST VECTOR.

USE 6" - 90 BEND VALUE FOR HYDRANTS FOR ADDITIONAL SAFETY FACTOR.

CITY OF RALEIGH
DEPARTMENT OF PUBLIC UTILITIES
THRUST BLOCKING DESIGN QUANTITY TABLE

DWG. NO.	REVISIONS	DATE	REVISIONS	DATE
W-10	D.W.C.	6-23-99		

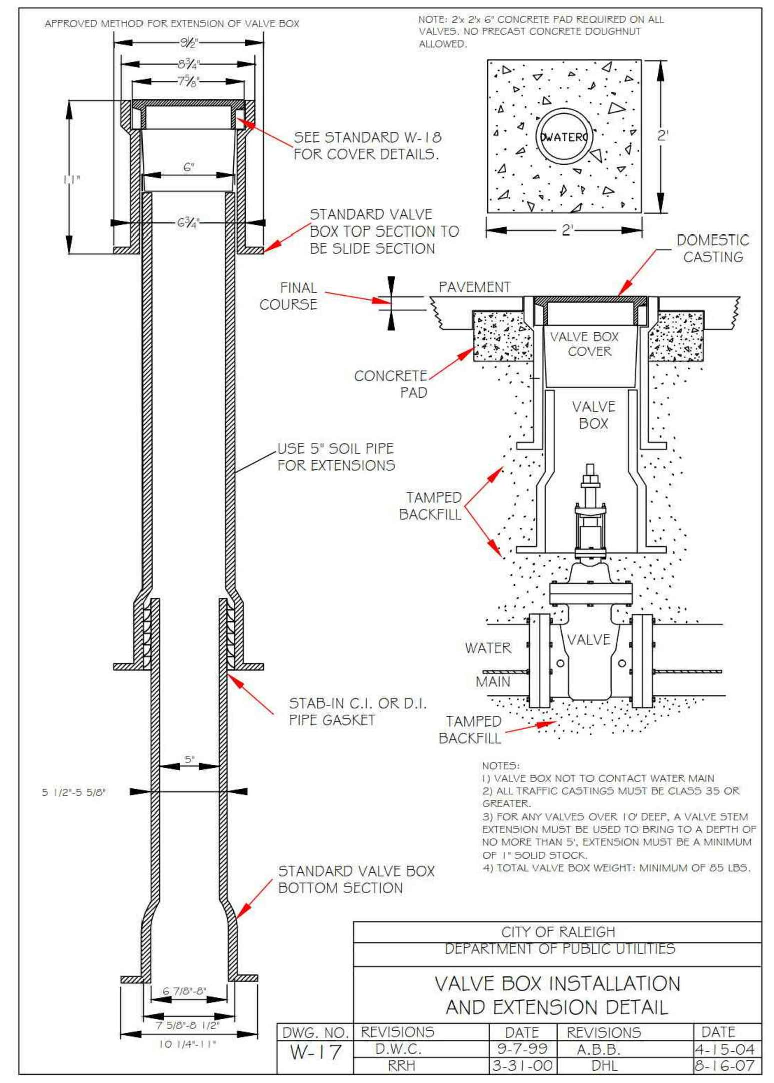

CITY OF RALEIGH
DEPARTMENT OF PUBLIC UTILITIES
VALVE BOX INSTALLATION AND EXTENSION DETAIL

DWG. NO.	REVISIONS	DATE	REVISIONS	DATE
W-17	D.W.C.	9-7-99	A.B.B.	4-15-04
	RRH	3-31-00	DHL	8-16-07

REACTION BEARING AREAS FOR HORIZONTAL WATER PIPE BENDS
BASED ON TEST PRESSURE OF 200 P.S.I.
ALL AREAS GIVEN IN SQUARE FEET.

SIZE AND DEGREE OF BEND	STATIC THRUST IN POUNDS	MODERATELY DRY CLAY 4000 LBS/FT²	SOFT CLAY 2000 LBS/FT²	GRAVEL/COARSE SAND 1600LBS/FT²	8000 LBS/FT² DRY CLAY - ALWAYS DRY	SAND, COMPACT FIRM 8000 LBS/FT²	SAND -CLEAN DRY 4000 LBS/FT²	SOIL 1000 LBS/FT² QUICKSAND - VERY POOR	ROCK - POOR 10,000 LBS/FT²
24"									
11 1/4°	17,734	5	9	11	3	3	5	18	2
22 1/2°	35,305	9	18	22	5	5	9	36	4
45°	69,252	18	35	42	9	9	18	70	7
90°	127,936	32	64	77	16	16	32	128	13
PLUG	90,478	23	46	55	12	12	23	91	10
30"									
11 1/4°	27,709	7	14	17	4	4	7	2	3
22 1/2°	55,163	14	28	34	7	7	14	56	6
45°	108,206	28	55	65	14	14	28	109	11
90°	199,900	50	100	120	25	25	50	200	20
PLUG	141,372	36	71	85	18	18	36	142	15
36"									
11 1/4°	39,901	10	20	24	5	5	10	40	4
22 1/2°	79,439	20	40	48	10	10	20	30	8
45°	155,816	39	78	94	20	20	39	156	16
90°	287,855	72	144	172	36	36	72	288	29
PLUG	203,575	51	102	122	26	26	51	204	21
48"									
11 1/4°	70,935	18	36	43	9	9	18	71	8
22 1/2°	141,218	36	71	85	18	18	36	142	15
45°	277,007	70	139	166	35	35	70	277	28
90°	511,742	128	256	320	64	64	128	512	52
PLUG	361,911	91	181	217	46	46	91	362	37

REACTION BEARING AREAS ARE IN SQUARE FEET MEASURED IN A VERTICAL PLANE IN THE TRENCH SIDE AT AN ANGLE OF 90° TO THE THRUST VECTOR.

USE 6" - 90° BEND VALUE FOR HYDRANTS FOR ADDITIONAL SAFETY FACTOR.

CITY OF RALEIGH
DEPARTMENT OF PUBLIC UTILITIES
THRUST BLOCKING DESIGN QUANTITY TABLE

DWG. NO.	REVISIONS	DATE	REVISIONS	DATE
W-11	D.W.C.	6-23-99		

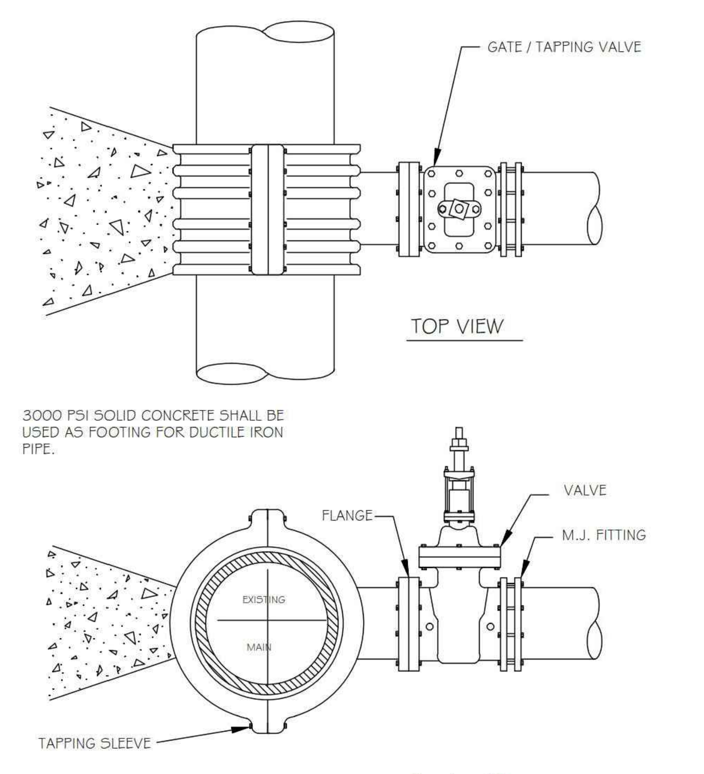

NOTES:
1. CONCRETE SHALL NOT CONTACT BOLTS OR ENDS OF MECHANICAL JOINT FITTINGS.
2. SEE STANDARD REACTION BLOCK TABLES, W-10 AND W-11 FOR AREA OF CONCRETE REQUIRED.

CITY OF RALEIGH
DEPARTMENT OF PUBLIC UTILITIES
4" - 24" STANDARD TAPPING SLEEVE AND VALVE ASSEMBLY

DWG. NO.	REVISIONS	DATE	REVISIONS	DATE
W-14	Y.C.A.	12-31-91	RRH	3-31-00
	D.W.C.	9-7-99	J.P.S.	11-1-10

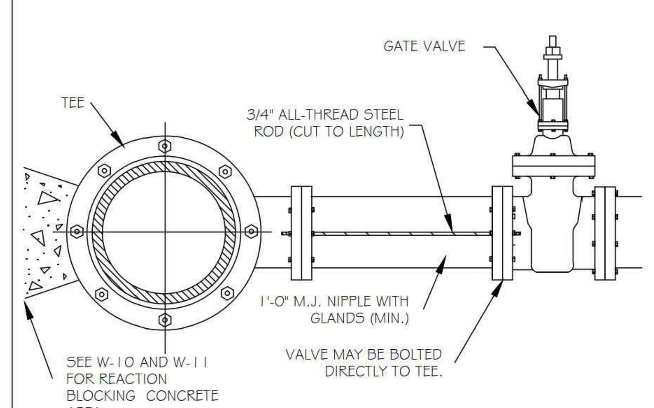

ROD REQUIREMENTS

NO. OF RODS	BRANCH SIZE
4"	2
6"	2
8"	4
12"	4
16"	6
24"	6
30"	8
36"	8

NOTES:
1. STEEL RODS AND BOLTS SHALL BE 3/4" HOT DIPPED GALVANIZED.
2. SEE STANDARD THRUST BLOCK. TABLES W-10 AND W-11 FOR CONCRETE.
3. CONCRETE SHALL NOT CONTACT BOLTS OR ENDS OF MECHANICAL FITTINGS.
4. THIS RODDING REQUIREMENT DOES NOT APPLY TO FIRE HYDRANTS.

CITY OF RALEIGH
DEPARTMENT OF PUBLIC UTILITIES
VALVE RESTRAINT AT TEES AND CROSSES FOR LINES (4"-24")

DWG. NO.	REVISIONS	DATE	REVISIONS	DATE
W-15	RRH	3-31-00	D.H.L.	6-16-08
	A.B.B.	4-19-04	J.P.S.	11-1-10

CONCURRENT REVIEW APPROVAL

CITY OF RALEIGH – PLANS AUTHORIZED FOR CONSTRUCTION

Plans for the proposed use have been reviewed for general compliance with applicable codes. This limited review, and authorization for construction is not to be considered to represent total compliance with all legal requirements for development and construction. The property owner, design consultants, and contractors are each responsible for compliance with all applicable City, State and Federal laws. This specific authorization below is not a permit, nor shall it be construed to permit any violation of City, State or Federal Law. All Construction must be in accordance with all Local, State, and Federal Rules and Regulations.

PUBLIC UTILITIES ______________________

FINAL DRAWING - NOT RELEASED FOR CONSTRUCTION

McADAMS
The John R. McAdams Company, Inc.
2905 Meridian Parkway
Durham, NC 27713

phone 919. 361. 5000
fax 919. 361. 2269
license number: C-0293, C-187

www.mcadamsco.com

CLIENT

ASHTON WOODS
5711 SIX FORKS ROAD, SUITE 300
RALEIGH, NORTH CAROLINA 27609

ASHTON WOODS™

THE POINT PHASES 11-13
CONSTRUCTION DRAWINGS
EAST YOUNG STREET
TOWN OF ROLESVILLE, WAKE FOREST TOWNSHIP, WAKE COUNTY, NORTH CAROLINA

CD XX-XX

NORTH CAROLINA PROFESSIONAL SEAL 22630 ENGINEER WILLIAM T. O'DANIEL
PRELIMINARY – NOT FOR CONSTRUCTION

REVISIONS

NO. DATE

PLAN INFORMATION

PROJECT NO.	AWH-20000
FILENAME	AWH20000-CD-PKG-02-D1
CHECKED BY	.
DRAWN BY	.
SCALE	N.T.S.
DATE	10. 27. 2022

SHEET

WATER DETAILS

C8.04

M:\Projects\AWH\AWH-20000\04-Production\Engineering\The Point North\Current Drawings\AWH20000-North-D1.dwg, 10/27/2022 8:52:06 AM, Williams, 1:1
M:\Projects\AWH\AWH-20000\04-Production\Engineering\The Point North\Current Drawings\AWH20000-North-D1.dwg, 10/27/2022 8:52:07 AM, Sherrill Williams

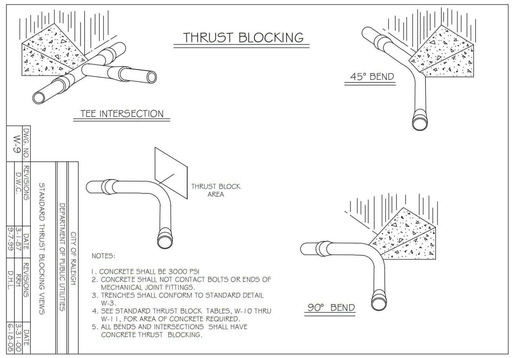

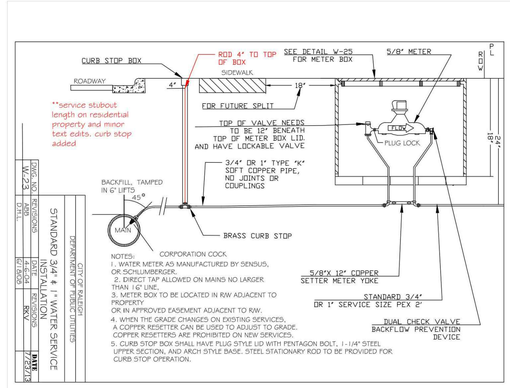

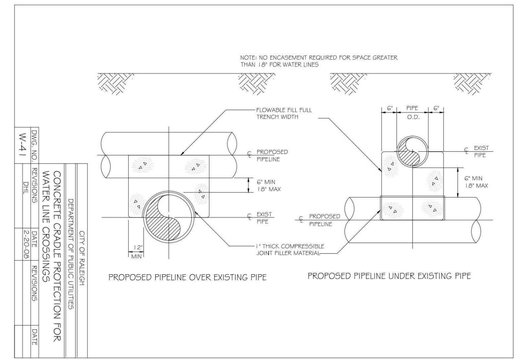

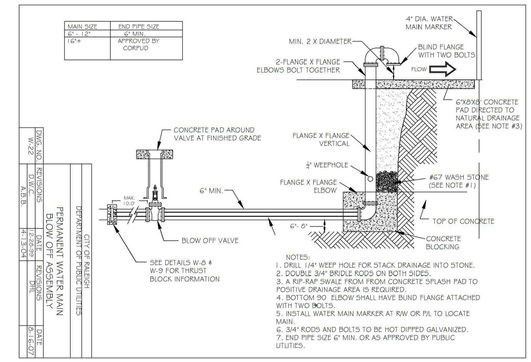

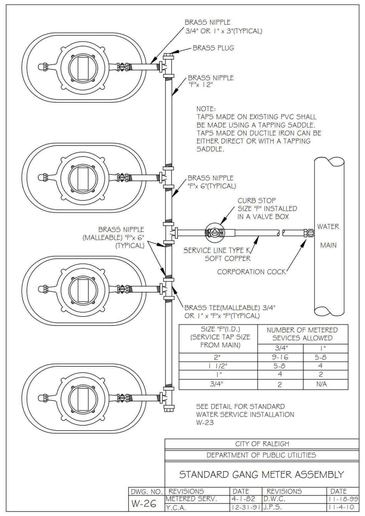

SIZE "9"(O.D.) (SERVICE TAP SIZE FROM MAIN)	NUMBER OF METERED SEVICES ALLOWED	
	3/4"	1"
2"	9-16	5-8
1 1/2"	5-8	4
1"	4	2
3/4"	2	N/A

DWG. NO.	REVISIONS	DATE	REVISIONS	DATE
W-26	METERED SERV.	4-1-02	D.W.C.	11-15-99
	Y.C.A.	12-31-91	J.P.S.	11-4-10

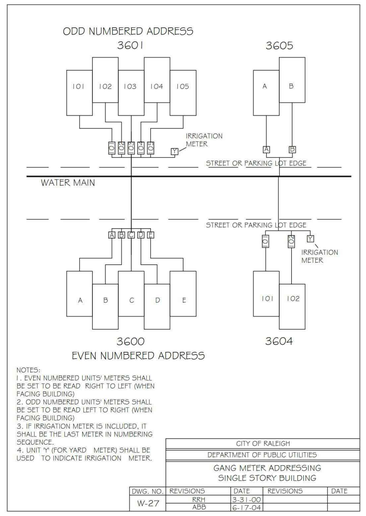

DWG. NO.	REVISIONS	DATE	REVISIONS	DATE
W-27	RKH	3-31-00		
	ABB	6-17-04		

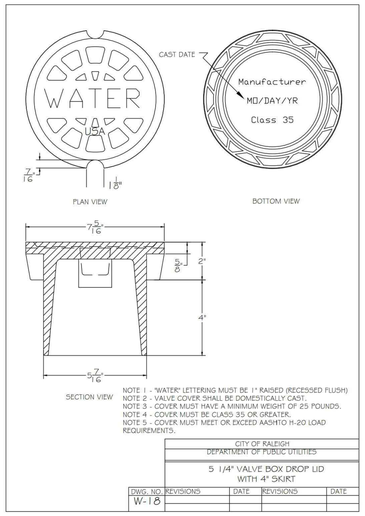

DWG. NO.	REVISIONS	DATE	REVISIONS	DATE
W-18				

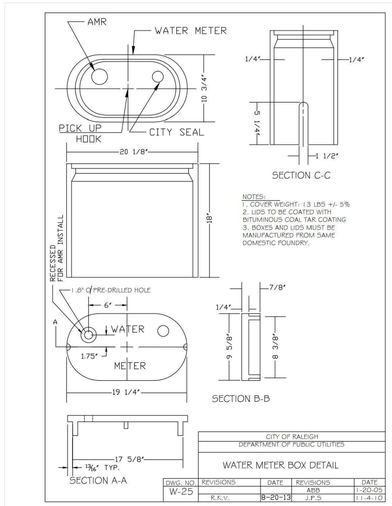

DWG. NO.	REVISIONS	DATE	REVISIONS	DATE
W-25			ABB	1-20-05
	K.K.V.	8-20-13	J.P.S.	11-4-10

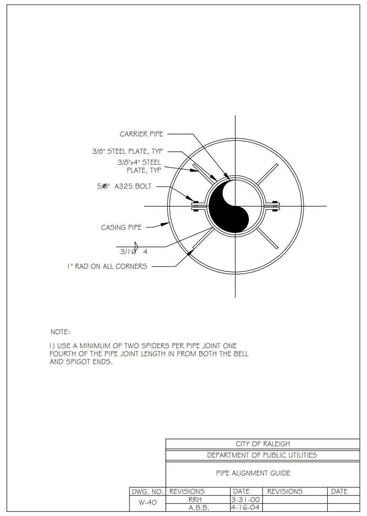

DWG. NO.	REVISIONS	DATE	REVISIONS	DATE
W-40	RKH	3-31-00		
	A.B.B.	4-16-04		

GRASSPAVE2 Permeable/Porous Paver Edging Detail

Use this detail for edging Grasspave2 areas

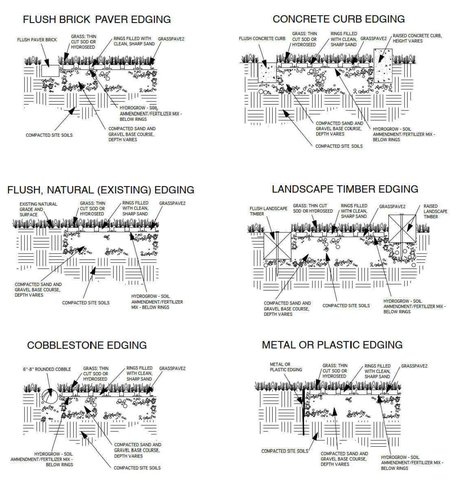

NOT TO SCALE

1 1OF1

GRASSPAVE2 BY INVISIBLE STRUCTURES

Invisible Structures, Inc.
GP2EDGING11.dwg

INVISIBLE STRUCTURES
303-233-8383
www.invisiblestructures.com
V4.1

GRASSPAVE2 Firelane Detail

Use this detail for delineating a Grasspave2 firelane

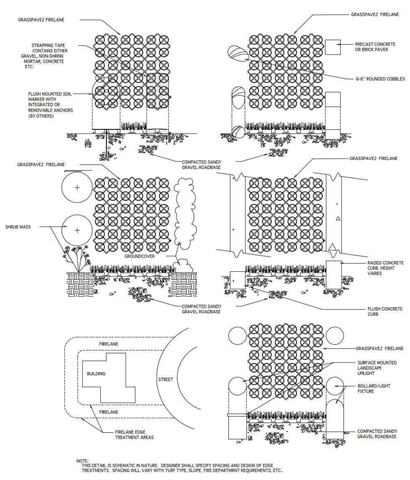

NOTES:
THIS DETAIL IS SCHEMATIC IN NATURE. DESIGNER SHALL SPECIFY SPACING AND DESIGN OF EDGE TREATMENTS. SPACING WILL VARY WITH TURF TYPE, SLOPE, FIRE DEPARTMENT REQUIREMENTS, ETC..

NOT TO SCALE

1 1OF1

GRASSPAVE2 BY INVISIBLE STRUCTURES

Invisible Structures, Inc.
GP2Firelane11.dwg

INVISIBLE STRUCTURES
303-233-8383
www.invisiblestructures.com
V4.1

TYPICAL GRASSPAVE2 DETAIL

CHOOSE THIS PRODUCT FOR REINFORCING GRASS WEARING SURFACES

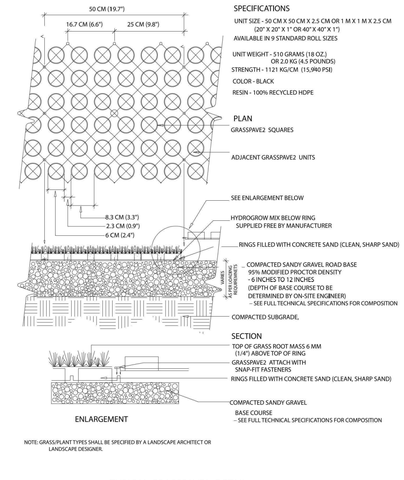

SPECIFICATIONS
UNIT SIZE - 50 CM X 50 CM X 2.5 CM OR 1 M X 1 M X 2.5 CM (20" X 20" X 1" OR 40" X 40" X 1")
AVAILABLE IN 9 STANDARD ROLL SIZES
UNIT WEIGHT - 510 GRAMS (18 OZ.) OR 2.0 KG (4.5 POUNDS)
STRENGTH - 1121 KG/CM (15,940 PSI)
COLOR - BLACK
RESIN - 100% RECYCLED HDPE

PLAN
GRASSPAVE2 SQUARES
ADJACENT GRASSPAVE2 UNITS
SEE ENLARGEMENT BELOW
HYDROGROW MIX BELOW RING SUPPLIED FREE BY MANUFACTURER
RINGS FILLED WITH CONCRETE SAND (CLEAN, SHARP SAND)
COMPACTED SANDY GRAVEL ROAD BASE
99% MODIFIED PROCTOR DENSITY
- 6 INCHES TO 12 INCHES (DEPTH OF BASE COURSE TO BE DETERMINED BY ON-SITE ENGINEER)
- SEE FULL TECHNICAL SPECIFICATIONS FOR COMPOSITION
COMPACTED SUBGRADE.

SECTION
TOP OF GRASS ROOT MASS 6 MM (1/4") ABOVE TOP OF RING
GRASSPAVE2 ATTACH WITH SNAP-FIT FASTENERS
RINGS FILLED WITH CONCRETE SAND (CLEAN, SHARP SAND)
COMPACTED SANDY GRAVEL BASE COURSE
- SEE FULL TECHNICAL SPECIFICATIONS FOR COMPOSITION

NOTE: GRASS/PLANT TYPES SHALL BE SPECIFIED BY A LANDSCAPE ARCHITECT OR LANDSCAPE DESIGNER.

TYPICAL GRASSPAVE2 DETAIL

CHOOSE THIS PRODUCT FOR REINFORCING GRASS WEARING SURFACES

1 1 OF 1

NOT TO SCALE

Invisible Structures, Inc.
GP2ETH1.DWG

16265 E. 33RD DR., SUITE 20
AURORA, COLORADO 80011
800-233-1510 OR 303-233-8383
FAX: 800-233-1522 OR 303-233-8282
www.invisiblestructures.com
rev. 5/18

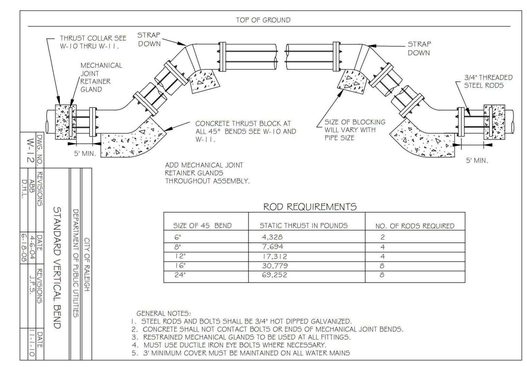

ROD REQUIREMENTS

SIZE OF 45° BEND	STATIC THRUST IN POUNDS	NO. OF RODS REQUIRED
6"	4,326	2
8"	7,694	4
12"	17,312	4
16"	30,779	6
24"	69,252	6

GENERAL NOTES:
1. STEEL RODS AND BOLTS SHALL BE 3/4" HOT DIPPED GALVANIZED.
2. CONCRETE SHALL NOT CONTACT BOLTS OR ENDS OF MECHANICAL JOINT BENDS.
3. RESTRAINED MECHANICAL GLANDS TO BE USED AT ALL FITTINGS.
4. MUST USE DUCTILE IRON EYE BOLTS WHERE NECESSARY.
5. 3' MINIMUM COVER MUST BE MAINTAINED ON ALL WATER MAINS

DWG. NO.	REVISIONS	DATE	REVISIONS	DATE
W-12	ABB	1-20-05		
	K.K.V.	8-20-13	J.P.S.	11-4-10

STANDARD VERTICAL BEND
CITY OF RALEIGH
DEPARTMENT OF PUBLIC UTILITIES

CONCURRENT REVIEW APPROVAL

CITY OF RALEIGH – PLANS AUTHORIZED FOR CONSTRUCTION

Plans for the proposed use have been reviewed for general compliance with applicable codes. This limited review, and authorization for construction is not to be considered to represent total compliance with all legal requirements for development and construction. The property owner, design consultants, and contractors are each responsible for compliance with all applicable City, State and Federal laws. This specific authorization below is not a permit, nor shall it be construed to permit any violation of City, State or Federal Law. All Construction must be in accordance with all Local, State, and Federal Rules and Regulations.

PUBLIC UTILITIES_____

FINAL DRAWING - NOT RELEASED FOR CONSTRUCTION

MCADAMS
The John R. McAdams Company, Inc.
2905 Meridian Parkway
Durham, NC 27713

phone 919. 361. 5000
fax 919. 361. 2269
license number: C-0293, C-187

www.mcadamsco.com

CLIENT

ASHTON WOODS
5711 SIX FORKS ROAD, SUITE 300
RALEIGH, NORTH CAROLINA 27609

ASHTON WOODS

THE POINT
PHASES 11-13
CONSTRUCTION DRAWINGS
EAST YOUNG STREET
TOWN OF ROLESVILLE, WAKE FOREST TOWNSHIP, WAKE COUNTY, NORTH CAROLINA

CD XX-XX

NORTH CAROLINA PROFESSIONAL SEAL 22630 ENGINEER WILLIAM T. O'DANIEL
NOT FOR CONSTRUCTION

REVISIONS

NO. DATE

PLAN INFORMATION

PROJECT NO.	AWH-20000
FILENAME	AWH20000-CD-PKG-02-D1
CHECKED BY	.
DRAWN BY	.
SCALE	N.T.S.
DATE	10. 27. 2022

SHEET

WATER DETAILS

C8.05

M:\Projects\AWH\AWH-20000\04-Production\Engineering\The Point North\Current Drawings\AWH20000-North-D1.dwg, 10/27/2022 8:52:17 AM, Williams, 1:1

M:\Projects\AWH\AWH-20000\04-Production\Engineering\The Point North\Current Drawings\AWH20000-North-D1.dwg, 10/27/2022 8:52:18 AM, Sherrill Williams

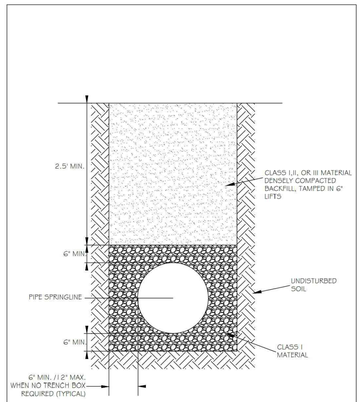

CITY OF RALEIGH				
DEPARTMENT OF PUBLIC UTILITIES				
STANDARD BEDDING DETAILS FOR CCFRPM PIPES				
DWG. NO.	REVISIONS	DATE	REVISIONS	DATE
5-1	J.P.S.	10-6-10		

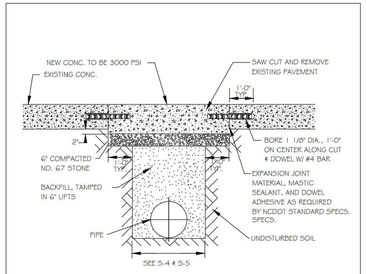

NOTES:
1. See City of Raleigh standards for trenches and pipe bedding (5-4 & 5-5) for additional details.
2. Pavement cuts over 5'-0" in width shall be reinforced to N.C.D.O.T. standards.
3. Pavement cuts shall be made with an appropriate saw cut machine.
4. Pavement cuts within NCDOT ROW shall conform to the approved on site encroachment permit.

CITY OF RALEIGH				
DEPARTMENT OF PUBLIC UTILITIES				
STANDARD CONCRETE PAVEMENT PATCH DETAIL				
DWG. NO.	REVISIONS	DATE	REVISIONS	DATE
5-2	D.W.C.	6-23-99	A.B.B.	4-19-04
	RRH	3-30-00	J.P.S.	10-8-10

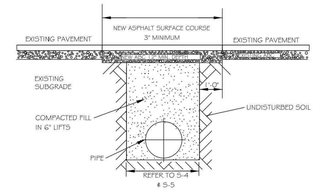

NOTES:
1. IN NCDOT MAINTAINED ROADWAYS ENCROACHMENT PAVEMENT PATCH REQUIREMENTS SHALL TAKE PRECEDENCE.
2. THE PAVEMENT CUT SHALL BE DEFINED BY A STRAIGHT EDGE AND CUT WITH AN APPROPRIATE SAWCUT MACHINE.
3. THE TRENCH SUBGRADE MATERIAL SHALL BE BACKFILLED WITH SUITABLE MATERIAL AND COMPACTED TO A DENSITY OF AT LEAST 95% OF THAT OBTAINED BY COMPACTING A SAMPLE OF THE MATERIAL IN ACCORDANCE WITH AASHTO T-99 AS MODIFIED BY NCDOT.
4. THE FINAL 1' OF FILL SHALL CONSIST OF ABC MATERIAL COMPACTED TO A DENSITY EQUAL TO 100% OF THAT OBTAINED BY COMPACTING A SAMPLE OF THE MATERIAL IN ACCORDANCE WITH AASHTO T-80 AS MODIFIED BY NCDOT.
5. THE ENTIRE THICKNESS AND VERTICAL EDGE OF CUT SHALL BE TACKED.
6. THE SAME DEPTH OF PAVEMENT MATERIAL WHICH EXISTS SHALL BE REINSTALLED, BUT IN NO CASE SHALL THE ASPHALT BE LESS THAN 3" THICK.
7. THE ASPHALT PAVEMENT MATERIAL SHALL BE INSTALLED AND COMPACTED THOROUGHLY WITH A SMOOTH DRUM ROLLER TO ACHIEVE A SMOOTH LEVEL PATCH.
8. REFER TO CITY OF RALEIGH STANDARDS FOR TRENCHES AND PIPE BEDDING (5-4 & 5-5) FOR ADDITIONAL DETAILS.
9. NO HAND PATCHING ALLOWED.
10. PAVEMENT CUTS WITHIN NCDOT ROW SHALL CONFORM TO THE APPROVED ON SITE ENCROACHMENT PERMIT.

CITY OF RALEIGH				
DEPARTMENT OF PUBLIC UTILITIES				
STANDARD ASPHALT PAVEMENT PATCH DETAIL				
DWG. NO.	REVISIONS	DATE	REVISIONS	DATE
5-3	D.W.C.	11-1-99	A.B.B.	4-19-04
	RRH	3-30-00	J.P.S.	10-8-10

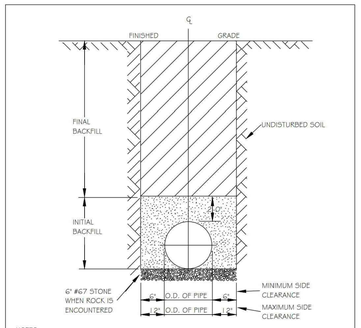

NOTES:
1. TRENCHES REQUIRING SHORING AND BRACING, DIMENSIONS SHALL BE TAKEN FROM THE INSIDE FACE OF THE SHORING AND BRACING.
2. NO ROCKS OR BOULDERS 4" OR LARGER TO BE USED IN INITIAL BACKFILL.
3. ALL BACKFILL MATERIAL SHALL BE SUITABLE NATIVE MATERIAL.
4. BACKFILL SHALL BE TAMPED IN 6" LIFTS IN TRAFFIC AREAS, 12" IN NON-TRAFFIC AREAS.
5. ACHIEVE 80% COMPACTION IN NON-TRAFFIC AREAS, AND 95% COMPACTION IN TRAFFIC AREAS.
6. IF IN EASEMENT 4" TOPSOIL, AND 12" CLEAN SELECT FILL MAY BE REQUIRED.
7. NO BOULDERS 8" IN DIAMETER OR GREATER ALLOWED IN FINAL BACKFILL.

CITY OF RALEIGH				
DEPARTMENT OF PUBLIC UTILITIES				
TRENCH BOTTOM DIMENSIONS & BACKFILLING REQUIREMENTS FOR DUCTILE IRON				
DWG. NO.	REVISIONS	DATE	REVISIONS	DATE
5-4	D.W.C.	9-3-99		
	RRH	3-30-00		

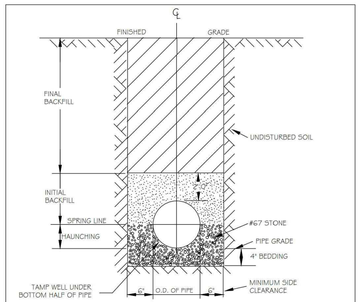

TYPICAL TRENCH BOTTOM DIMENSIONS FOR SDR 35 PVC GRAVITY PIPE

NOTES:
1. FOR TRENCHES REQUIRING SHORING AND BRACING, DIMENSIONS SHALL BE TAKEN FROM THE INSIDE FACE OF THE SHORING AND BRACING.
2. NO ROCKS OR BOULDERS 4" OR LARGER TO BE USED IN INITIAL BACKFILL.
3. ALL BACKFILL MATERIAL SHALL BE SUITABLE NATIVE MATERIAL.
4. BACKFILL SHALL BE TAMPED IN 6" LIFTS IN TRAFFIC AREAS, 12" IN NON-TRAFFIC AREAS.

CITY OF RALEIGH				
DEPARTMENT OF PUBLIC UTILITIES				
TRENCH BOTTOM DIMENSIONS AND BACKFILLING REQUIREMENTS FOR PVC GRAVITY SEWER MAIN				
DWG. NO.	REVISIONS	DATE	REVISIONS	DATE
5-5	TO NOTES	3-1-87	D.W.C.	9-3-99
		7-2-82	RRH	3-30-00

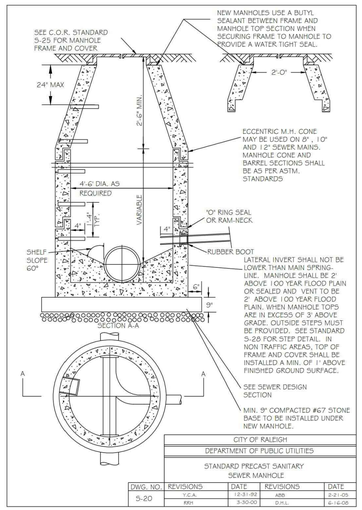

CITY OF RALEIGH				
DEPARTMENT OF PUBLIC UTILITIES				
STANDARD PRECAST SANITARY SEWER MANHOLE				
DWG. NO.	REVISIONS	DATE	REVISIONS	DATE
5-20	T.C.A.	12-31-93	ABB	2-21-05
	RRH	3-30-00	D.H.L.	6-16-08

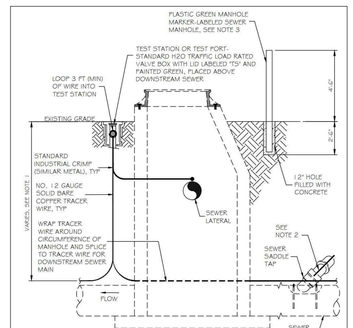

NOTES:
1. THE TRACER WIRE SHALL BE CONTINUOUS TO THE GREATEST EXTENT POSSIBLE. FOR GRAVITY MAIN AND OR LATERAL INSTALLATIONS LESS THAN 8 FT, THE TRACING WIRE SHALL BE ATTACHED TO THE PIPE. TRACER WIRE SHALL BE LAID FLAT AND SECURELY AFFIXED TO THE PIPE AT 10 FOOT INTERVALS. FOR GRAVITY MAIN AND OR LATERAL INSTALLATION DEEPER THAN 8 FT, THE TRACING WIRE SHALL BE INSTALLED AT A DEPTH OF 7-9 FT. THE WIRE SHALL BE PROTECTED FROM DAMAGE DURING THE EXECUTION OF THE WORK. NO BREAKS OF CUTS IN THE TRACER WIRE SHALL BE PERMITTED.
2. WHERE LATERAL TAPS ARE MADE BY SERVICE SADDLES, THE TRACER WIRE SHALL NOT BE ALLOWED TO TO BE PLACED BETWEEN THE SADDLE AND MAIN.
3. MANHOLE MARKERS SHALL BE PLACED ADJACENT TO MANHOLES AT THE DISCRETION OF OWNER OR OWNERS REPRESENTATIVE.

CITY OF RALEIGH				
DEPARTMENT OF PUBLIC UTILITIES				
GRAVITY SEWER MAIN TRACER WIRE AND MANHOLE MARKER				
DWG. NO.	REVISIONS	DATE	REVISIONS	DATE
5-20A	MRD	06-14		

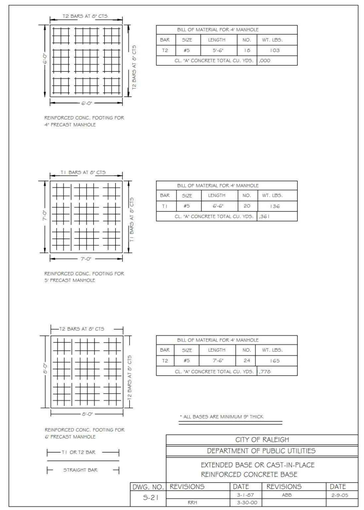

* ALL BASES ARE MINIMUM 9" THICK.

CITY OF RALEIGH				
DEPARTMENT OF PUBLIC UTILITIES				
EXTENDED BASE OR CAST-IN-PLACE REINFORCED CONCRETE BASE				
DWG. NO.	REVISIONS	DATE	REVISIONS	DATE
5-21		3-1-87	ABB	2-9-05
	RRH	3-30-00		

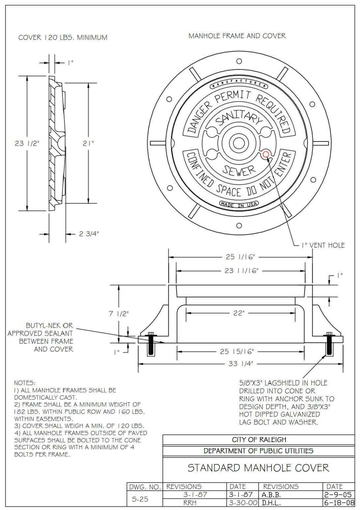

NOTES:
1) ALL MANHOLE FRAMES SHALL BE DOMESTICALLY CAST.
2) FRAME SHALL BE A MINIMUM WEIGHT OF 152 LBS. WITHIN PUBLIC ROW AND 160 LBS. WITHIN EASEMENTS.
3) COVER SHALL WEIGH A MIN. OF 120 LBS.
4) ALL MANHOLE FRAMES OUTSIDE OF PAVED SURFACES SHALL BE BOLTED TO THE CONE SECTION OR RING WITH A MINIMUM OF 4 BOLTS PER FRAME.

5/8"X3" LAGSHIELD IN HOLE DRILLED INTO CONE OR RING WITH ANCHOR SUNK TO DESIGN DEPTH, AND 3/8"X3" HOT DIPPED GALVANIZED LAG BOLT AND WASHER.

CITY OF RALEIGH				
DEPARTMENT OF PUBLIC UTILITIES				
STANDARD MANHOLE COVER				
DWG. NO.	REVISIONS	DATE	REVISIONS	DATE
5-25	3-1-87	3-1-87	A.B.B.	2-9-05
	RRH	3-30-00	D.H.L.	6-18-08

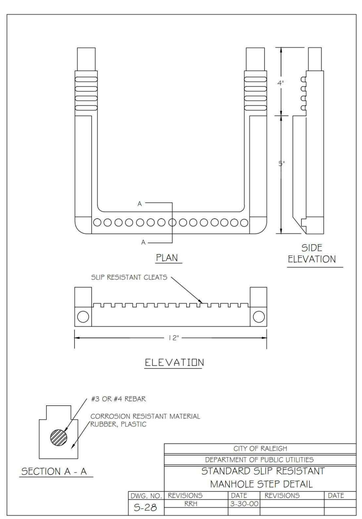

CITY OF RALEIGH				
DEPARTMENT OF PUBLIC UTILITIES				
STANDARD SLIP RESISTANT MANHOLE STEP DETAIL				
DWG. NO.	REVISIONS	DATE	REVISIONS	DATE
5-28	RRH	3-30-00		

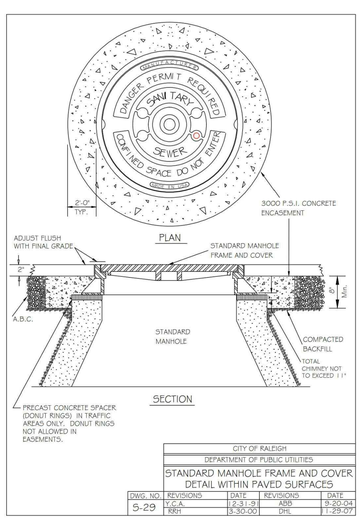

CITY OF RALEIGH				
DEPARTMENT OF PUBLIC UTILITIES				
STANDARD MANHOLE FRAME AND COVER DETAIL WITHIN PAVED SURFACES				
DWG. NO.	REVISIONS	DATE	REVISIONS	DATE
5-29	T.C.A.	12-31-93	ABB	9-20-04
	RRH	3-30-00	DHL	11-29-07

CONCURRENT REVIEW APPROVAL

CITY OF RALEIGH – PLANS AUTHORIZED FOR CONSTRUCTION

Plans for the proposed use have been reviewed for general compliance with applicable codes. This limited review, and authorization for construction is not to be considered to represent total compliance with all legal requirements for development and construction. The property owner, design consultants, and contractors are each responsible for compliance with all applicable City, State and Federal laws. This specific authorization below is not a permit, nor shall it be construed to permit any violation of City, State or Federal Law. All Construction must be in accordance with all Local, State, and Federal Rules and Regulations.

PUBLIC UTILITIES_____

FINAL DRAWING - NOT RELEASED FOR CONSTRUCTION

McADAMS

The John R. McAdams Company, Inc.
2905 Meridian Parkway
Durham, NC 27713

phone 919. 361. 5000
fax 919. 361. 2269
license number: C-0293, C-187

www.mcadamsco.com

CLIENT

ASHTON WOODS
5711 SIX FORKS ROAD, SUITE 300
RALEIGH, NORTH CAROLINA 27609

ASHTON WOODS

THE POINT
PHASES 11-13
CONSTRUCTION DRAWINGS
EAST YOUNG STREET
TOWN OF ROLESVILLE, WAKE FOREST TOWNSHIP, WAKE COUNTY, NORTH CAROLINA

CD XX-XX

NORTH CAROLINA PROFESSIONAL SEAL 22630 ENGINEER WILLIAM T. O'DANIEL
NOT FOR CONSTRUCTION

REVISIONS

NO. DATE

PLAN INFORMATION

PROJECT NO.	AWH-20000
FILENAME	AWH20000-CD-PKG-02-D1
CHECKED BY	.
DRAWN BY	.
SCALE	N.T.S.
DATE	10. 27. 2022

SHEET

SANITARY SEWER DETAILS

C8.06

M:\Projects\AWH\AWH-20000\04-Production\Engineering\The Point North\Current Drawings\AWH20000-North-D1.dwg, 10/27/2022 8:52:33 AM, Williams, 1:1

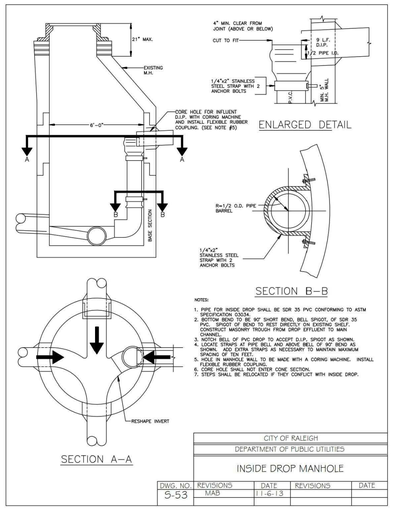

CITY OF RALEIGH				
DEPARTMENT OF PUBLIC UTILITIES				
INSIDE DROP MANHOLE				
DWG. NO.	REVISIONS	DATE	REVISIONS	DATE
5-53	MAB	11-6-13		

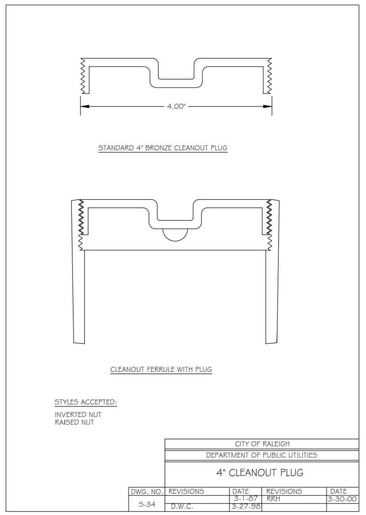

CITY OF RALEIGH				
DEPARTMENT OF PUBLIC UTILITIES				
4" CLEANOUT PLUG				
DWG. NO.	REVISIONS	DATE	REVISIONS	DATE
5-34	D.W.C.	3-1-87 3-27-98	RRH	3-30-00

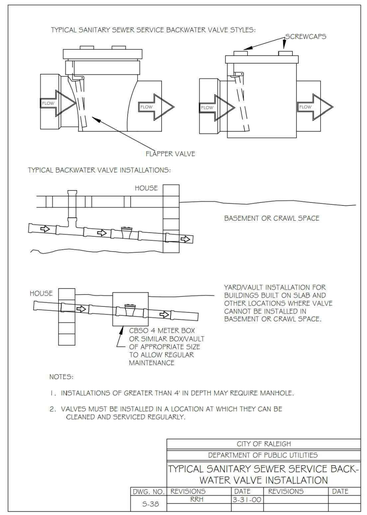

CITY OF RALEIGH				
DEPARTMENT OF PUBLIC UTILITIES				
TYPICAL SANITARY SEWER SERVICE BACK-WATER VALVE INSTALLATION				
DWG. NO.	REVISIONS	DATE	REVISIONS	DATE
5-35	RRH	3-31-00		

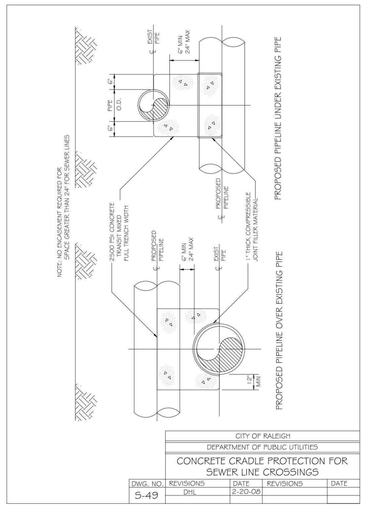

CITY OF RALEIGH				
DEPARTMENT OF PUBLIC UTILITIES				
CONCRETE CRADLE PROTECTION FOR SEWER LINE CROSSINGS				
DWG. NO.	REVISIONS	DATE	REVISIONS	DATE
5-49	DHL	2-20-08		

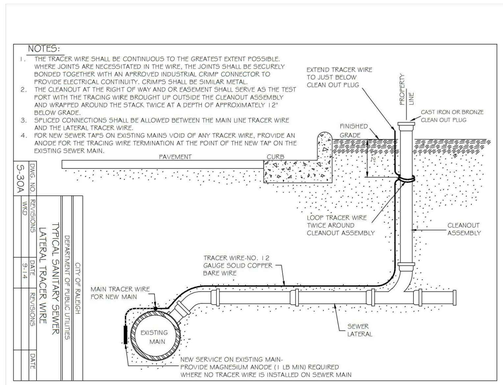

CITY OF RALEIGH				
DEPARTMENT OF PUBLIC UTILITIES				
TYPICAL SANITARY SEWER LATERAL TRACER WIRE				
DWG. NO.	REVISIONS	DATE	REVISIONS	DATE
5-30A	RRH	9-14-00		

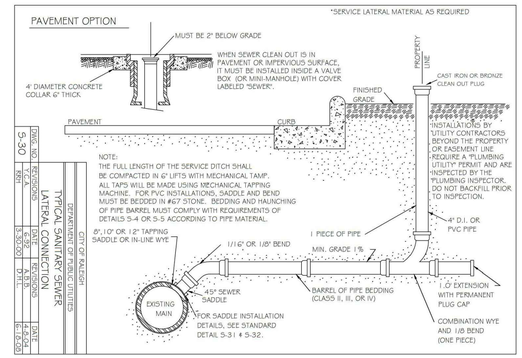

CITY OF RALEIGH				
DEPARTMENT OF PUBLIC UTILITIES				
TYPICAL SANITARY SEWER LATERAL CONNECTION				
DWG. NO.	REVISIONS	DATE	REVISIONS	DATE
5-30	RRH	9-14-00		
5-30-2	DHL	2-20-08		

CONCURRENT REVIEW APPROVAL

CITY OF RALEIGH – PLANS AUTHORIZED FOR CONSTRUCTION

Plans for the proposed use have been reviewed for general compliance with applicable codes. This limited review, and authorization for construction is not to be considered to represent total compliance with all legal requirements for development and construction. The property owner, design consultants, and contractors are each responsible for compliance with all applicable City, State and Federal laws. This specific authorization below is not a permit, nor shall it be construed to permit any violation of City, State or Federal Law. All Construction must be in accordance with all Local, State, and Federal Rules and Regulations.

PUBLIC UTILITIES_____

FINAL DRAWING - NOT RELEASED FOR CONSTRUCTION

MCADAMS

The John R. McAdams Company, Inc.
2905 Meridian Parkway
Durham, NC 27713

phone 919. 361. 5000
fax 919. 361. 2269
license number: C-0293, C-187

www.mcadamsco.com

CLIENT

ASHTON WOODS
5711 SIX FORKS ROAD, SUITE 300
RALEIGH, NORTH CAROLINA 27609

ASHTON WOODS

THE POINT PHASES 11-13

CONSTRUCTION DRAWINGS
EAST YOUNG STREET
TOWN OF ROLESVILLE, WAKE FOREST TOWNSHIP, WAKE COUNTY, NORTH CAROLINA

CD XX-XX

NORTH CAROLINA PROFESSIONAL SEAL 22630 ENGINEER WILLIAM T. O'DANIEL

NOT FOR CONSTRUCTION

REVISIONS

NO. DATE

PLAN INFORMATION

PROJECT NO.	AWH-20000
FILENAME	AWH20000-CD-PKG-02-D1
CHECKED BY	.
DRAWN BY	.
SCALE	N.T.S.
DATE	10. 27. 2022

SHEET

SANITARY SEWER DETAILS

C8.07

M:\Projects\AWH\AWH-20000\04-Production\Engineering\The Point North\Current Drawings\AWH20000-North-D1.dwg, 10/27/2022 8:52:45 AM, Williams, 1:1
M:\Projects\AWH\AWH-20000\04-Production\Engineering\The Point North\Current Drawings\AWH20000-North-D1.dwg, 10/27/2022 8:52:45 AM, Sherril Williams

STORMWATER CONTROL MEASURE 'M' CONSTRUCTION SPECIFICATIONS

GENERAL NOTES

1. PRIOR TO CONSTRUCTION, ANY DISCREPANCIES IN THE PLANS AND NOTES SHALL BE BROUGHT TO THE DESIGN ENGINEER'S ATTENTION IMMEDIATELY.

2. THE PROJECT WILL MEET ALL OF THE REQUIREMENTS RELATIVE TO BEST MANAGEMENT PRACTICES AND ENGINEERED STORMWATER CONTROL STRUCTURES AS OUTLINED IN THE TOWN OF ROLESVILLE LAND DEVELOPMENT ORDINANCE.

3. THE FINAL CERTIFICATION FOR THIS FACILITY WILL INCLUDE A CERTIFICATION BY THE ON-SITE GEOTECHNICAL ENGINEER THAT THE PROJECT WAS CONSTRUCTED PER THE APPROVED PLANS. IT IS THE RESPONSIBILITY OF THE CONTRACTOR TO COORDINATE WITH THE ON-SITE GEOTECHNICAL ENGINEER FOR OBSERVATION AND TESTING SUCH THAT THE ON-SITE GEOTECHNICAL ENGINEER CAN CERTIFY THE CONSTRUCTION OF THE DAM EMBANKMENT AND SPILLWAY. THIS CERTIFICATION MUST ADDRESS THE TESTING FOR MATERIALS AND COMPACTION OF THE DAM EMBANKMENT AND SPILLWAY.

4. ALL CONSTRUCTION ACTIVITY RELATED TO THE PROPOSED STORMWATER CONTROL MEASURE SHALL BE PER THE DETAILS AND SPECIFICATIONS SHOWN IN THESE DRAWINGS. SOILS, COMPACTION, AND OTHER MISCELLANEOUS DETAILS AND SPECIFICATIONS MAY BE MODIFIED PER THE RECOMMENDATIONS OF THE ON-SITE GEOTECHNICAL ENGINEER. HOWEVER, PRIOR TO IMPLEMENTATION, THE DESIGN ENGINEER SHALL BE NOTIFIED OF ANY DEVIATION FROM THESE DESIGN DRAWINGS, INCLUDING SHOP DRAWINGS FOR ANY PROPOSED MODIFICATION.

5. DURING THE INITIAL STAGES OF CONSTRUCTION, THE STORMWATER CONTROL MEASURE MAY BE USED AS A SEDIMENT BASIN FOR EROSION CONTROL PURPOSES. IF SO, THE CONTRACTOR SHALL FOLLOW THE GENERAL CONSTRUCTION SEQUENCE BELOW:
   A. THE CONTRACTOR SHALL CONSTRUCT THE ENTIRE FACILITY (PERMANENT OUTLET STRUCTURE, DAM, ETC.) WITH THE EXCEPTION OF THE INTERIOR FINE GRADING FOR THE FACILITY. THE INTERIOR FINE GRADING WILL BE CONSTRUCTED ONCE THE EROSION CONTROL PHASE IS COMPLETE.
   B. THE TEMPORARY DRAW DOWN RISER (OR SKIMMER) SHALL BE CONNECTED TO THE PERMANENT 6"Ø DIP DRAIN PIPE.
   C. ONCE THE UPSTREAM DRAINAGE AREA IS STABILIZED AND THE EROSION CONTROL INSPECTOR APPROVES THE REMOVAL OF THE SEDIMENT BASIN, THE CONTRACTOR SHALL REMOVE THE TEMPORARY DRAW DOWN RISER (OR SKIMMER) AND CLEAN OUT THE BASIN. ALL SEDIMENT, TRASH, ETC. SHALL BE DISPOSED OF PROPERLY (I.E. - PLACED IN A LANDFILL) AND NOT STOCKPILED IN AN AREA WHERE WATER QUALITY COULD BE ADVERSELY AFFECTED.
   D. ONCE THE BASIN IS CLEANED OUT, AND ALL EROSION CONTROL DEVICES REMOVED, THE CONTRACTOR SHALL CONSTRUCT THE INTERIOR GRADING SHOWN ON THIS SHEET.
   E. ONCE THE GRADING IS COMPLETE, THE CONTRACTOR SHALL REQUEST AN ON-SITE INSPECTION AND AN AS-BUILT SURVEY PRIOR TO INSTALLATION OF THE STORMWATER CONTROL MEASURE PLANTS. IF THE CONTRACTOR PLANTS THE PROPOSED VEGETATION PRIOR TO AN AS-BUILT SURVEY (AND SUBSEQUENT APPROVAL), ANY CHANGES TO THE GRADING / RE-PLANTING OF PLANTS WILL BE AT THE CONTRACTOR'S EXPENSE.
   F. ONCE THE ENGINEER HAS APPROVED THE AS-BUILT GRADING, THE CONTRACTOR SHALL PLANT THE PROPOSED STORMWATER CONTROL MEASURE PLANTS SHOWN ON THE LANDSCAPE PLAN FOR THE FACILITY. AFTER COMPLETION OF THE PLANTING, THE LANDSCAPE CONTRACTOR SHALL PROVIDE A LETTER TO THE ENGINEER CERTIFYING THAT THE PLANTS HAVE BEEN INSTALLED PER THE APPROVED STORMWATER CONTROL MEASURE PLANTING PLAN.

6. ALL OSHA REQUIREMENTS FOR EXCAVATIONS (SHORING, DEPTH, ETC.) ARE THE RESPONSIBILITY OF THE CONTRACTOR. IF REQUIRED, THE CONTRACTOR SHALL PROVIDE AN EXCAVATION PLAN TO BE SEALED BY A NC P.E. IT IS THE RESPONSIBILITY OF THE CONTRACTOR TO DETERMINE IF AN EXCAVATION PLAN IS REQUIRED. THE JOHN R. MCADAMS COMPANY ASSUMES NO RESPONSIBILITY FOR ANY EXCAVATION DESIGN RELATED TO SAFETY OR OSHA REQUIREMENTS.

7. ON-SITE GEOTECHNICAL ENGINEER TO DETERMINE IF IN-SITU SOILS ENCOUNTERED WOULD MAINTAIN A STORMWATER CONTROL MEASURE PERMANENT POOL AT DESIGN ELEVATION. IF HIGHLY PERMEABLE SOILS ARE ENCOUNTERED THAT WOULD NOT MAINTAIN THE PERMANENT POOL ELEVATION AS DESIGNED, A CLAY LINER MAY BE REQUIRED TO MAINTAIN A PERMANENT POOL OF WATER IN THE STORMWATER CONTROL MEASURE. FINAL DETERMINATION IF A CLAY LINER IS NEEDED SHALL BE THE RESPONSIBILITY OF THE ON-SITE GEOTECHNICAL ENGINEER. UPON DETERMINATION OF HIGHLY PERMEABLE SOIL CONDITIONS, ON-SITE GEOTECHNICAL ENGINEER WILL INFORM THE DESIGN ENGINEER AND RECOMMEND LINER SPECIFICATIONS.

8. IT IS ANTICIPATED THAT DEWATERING WILL BE NECESSARY IN THE EXCAVATION AREAS (E.G. - EMBANKMENT SUB GRADE, INTERIOR PORTIONS OF THE STORMWATER CONTROL MEASURE, KEY TRENCH, ETC.). THEREFORE, THE CONTRACTOR SHALL FURNISH, INSTALL, OPERATE, AND MAINTAIN ANY PUMPING EQUIPMENT, ETC. NEEDED FOR REMOVAL OF WATER FROM VARIOUS PARTS OF THE STORMWATER CONTROL MEASURE SITE. DURING PLACEMENT OF FILL WITHIN THESE AREAS, THE CONTRACTOR SHALL KEEP THE WATER LEVEL BELOW THE BOTTOM OF THE EXCAVATION / CONSTRUCTION AREAS. THE MANNER IN WHICH THE WATER IS REMOVED SHALL BE SUCH THAT THE EXCAVATION BOTTOM AND SIDE SLOPES ARE STABLE, WITH NO SEDIMENT DISCHARGED FROM THE SITE (I.E. PUMPED WATER MAY NEED TO BE DIRECTED TO AN APPROVED EROSION CONTROL DEVICE SUCH AS A DIRT BAG (ACF ENVIRONMENTAL), OR ENGINEER APPROVED EQUIVALENT, PRIOR TO DISCHARGE).

9. THE GRADES SHOWN ON THIS PLAN ARE FINISHED GRADES. IF THE EXISTING SOIL LAYER AFTER CONSTRUCTION / COMPACTION IS NOT DETERMINED SUITABLE BY A LANDSCAPE PROFESSIONAL FOR THE WET POND PLANTINGS, THEN THE CONTRACTOR SHALL AMEND THE PLANTING AREA OF THE WET POND AS DIRECTED BY A LANDSCAPE PROFESSIONAL.

10. PRIOR TO TOPSOIL INSTALLATION, THE CONTRACTOR SHALL SCARIFY THE TOP 2"-3" OF THE BERM SECTION TO PROMOTE BONDING OF THE TOPSOIL WITH THE COMPACTED FILL. THE TOPSOIL DEPTH SHALL RANGE FROM 3"-4" ON THE DAM EMBANKMENT AND WET POND. PLEASE NOTE THE TOPSOIL SHALL BE AMENDED, AS DIRECTED BY A LANDSCAPE PROFESSIONAL, PRIOR TO INSTALLATION ON THE EMBANKMENT AND WET POND.

11. THE CONTRACTOR SHALL REFER TO THE LANDSCAPE PLAN FOR THE PERMANENT PLANTING PLAN/SCHEDULE FOR THIS FACILITY. CONTRACTOR SHALL COORDINATE WITH A LANDSCAPE PROFESSIONAL REGARDING SCHEDULING FOR PLANT INSTALLATION. PLEASE NOTE THAT NO TREES/SHRUBS OF ANY TYPE MAY BE PLANTED ON THE PROPOSED DAM EMBANKMENT (FILL AREAS).

OUTLET STRUCTURE MATERIAL SPECIFICATIONS

1. THE 24"Ø RCP OUTLET BARREL SHALL BE CLASS III RCP, MODIFIED BELL AND SPIGOT, MEETING THE REQUIREMENTS OF ASTM C76-LATEST. THE PIPES SHALL HAVE CONFINED O-RING RUBBER GASKET JOINTS MEETING ASTM C-443-LATEST. THE PIPE JOINTS SHALL BE TYPE R-4.

2. THE STRUCTURAL DESIGN FOR THE 4' X 4' (INTERNAL DIMENSIONS) RISER BOX WITH EXTENDED BASE SHALL BE BY OTHERS. PRIOR TO ORDERING THE STRUCTURES, THE CONTRACTOR SHALL PROVIDE, TO THE DESIGN ENGINEER FOR REVIEW, SHOP DRAWINGS AND SUPPORTING STRUCTURAL CALCULATIONS SEALED BY A P.E. REGISTERED IN NORTH CAROLINA DEMONSTRATING THE PERTINENT VERTICAL LOADS ARE SUPPORTED BY THE CONCRETE RISER STRUCTURE.

3. THE RISER BOX OUTLET STRUCTURE SHALL BE PROVIDED WITH STEPS 16" ON CENTER. STEPS SHALL BE PROVIDED ON THE INNER WALL OF THE RISER BOX. STEPS SHALL BE IN ACCORDANCE WITH NCDOT STD. 840.66. PLEASE REFER TO SHEET C9.01 FOR LOCATION OF THE RISER STEPS. NOTE THE STEPS SHALL LINE UP WITH THE ACCESS HATCH OF THE TRASH RACK.

4. THE CONCRETE ANTI-FLOTATION BLOCK SHALL BE CAST-IN-PLACE. STEEL REINFORCEMENT AND CONNECTION TO THE RISER SHALL BE PROVIDED IN ACCORDANCE WITH THE DETAIL ON SHEET C9.02. THE CONTRACTOR SHALL ENSURE THE WEIGHT OF THE ENTIRE RISER STRUCTURE IS GREATER THAN OR EQUAL TO 16,783 LBS. IN LIEU OF CAST-IN-PLACE, THE CONTRACTOR MAY OPT FOR A PRECAST ANTI-FLOTATION BLOCK. SHOP DRAWINGS FOR THE PRECAST BLOCK SHALL BE SUBMITTED TO THE ENGINEER FOR REVIEW. THE PRECAST ANTI-FLOTATION BLOCK SHALL HAVE A SHIPPING WEIGHT OF 9,088 LBS.

5. THE RISER BOX JOINTS SHALL BE SEALED USING BUTYL RUBBER SEALANT CONFORMING TO ASTM-C990-LATEST. IF NECESSARY, THE CONTRACTOR SHALL INCORPORATE A WATERSTOP INTO THE RISER BOX JOINT TO ENSURE A WATERTIGHT CONNECTION. THE CONTRACTOR SHALL PARGE JOINTS ON BOTH THE INSIDE AND OUTSIDE WITH NON-SHRINK GROUT AND INSTALL GALVANIZED STEEL STRAPS PER DETAIL ON SHEET C9.01.

6. PRIOR TO ORDERING, THE CONTRACTOR SHALL SUBMIT TRASH RACK SHOP DRAWINGS TO THE ENGINEER FOR REVIEW. CONTRACTOR SHALL ENSURE THAT AN ACCESS HATCH IS PROVIDED WITHIN THE TRASH RACK (SEE DETAIL FOR LOCATION) THAT WILL ALLOW FOR FUTURE MAINTENANCE ACCESS. CONTRACTOR SHALL ALSO PROVIDE A CHAIN AND LOCK FOR SECURING THE ACCESS HATCH. NOTE THE ACCESS HATCH SHALL LINE UP WITH THE ACCESS STEPS AFTER INSTALLATION.

7. ALL POURED CONCRETE SHALL MEET THE FOLLOWING SPECIFICATIONS UNLESS OTHERWISE NOTED:

   -MINIMUM 3000 PSI (28 DAY)
   -SLUMP = 3" - 5"
   -ENTRAINED AIR = 5% - 7%

   PLEASE NOTE NO CONCRETE SHALL BE POURED WHEN THE AMBIENT AIR TEMPERATURES ARE EXPECTED TO BE ABOVE 85°F OR BELOW 40°F. CAST-IN-PLACE CONCRETE SHALL BE "WET CURED" AFTER FINISHING FOR A MINIMUM OF 48 HOURS.

   ON-SITE GEOTECHNICAL ENGINEER TO ENSURE AND CERTIFY ALL POURED CONCRETE MEETS THE ABOVE SPECIFICATIONS.

8. GEOTEXTILE FABRIC FOR THE 24"Ø RCP OUTLET BARREL JOINTS SHALL BE MIRAFI 180N OR ENGINEER APPROVED EQUAL (NON-WOVEN FABRIC).

9. STORMWATER CONTROL MEASURE EMERGENCY DRAW DOWN IS VIA AN 6"Ø PLUG VALVE. THE VALVE SHALL BE A M&H STYLE 1820 ECCENTRIC VALVE OR APPROVED EQUAL. THIS VALVE IS IN ACCORDANCE WITH AWWA C-517, AND SHALL BE OPERABLE FROM TOP OF OUTLET STRUCTURE VIA A HAND WHEEL (SEE DETAIL SHEET C9.01). THE CONTRACTOR SHALL PROVIDE A REMOVABLE VALVE WRENCH WITH A HAND WHEEL ON TOP FOR OPERATION OF THE 6"Ø PLUG VALVE.

CONSTRUCTION SEQUENCE

1. PRIOR TO CONSTRUCTION, THE OWNER SHALL OBTAIN A LAND DISTURBING (GRADING) PERMIT AND AN "APPROVAL TO CONSTRUCT" FROM THE TOWN OF ROLESVILLE AND ALL OTHER NECESSARY PERMITS FROM APPLICABLE AGENCIES (E.G. 404 / 401 PERMITS)

2. INSTALL ALL SEDIMENT AND EROSION CONTROL MEASURES PER THE APPROVED SEDIMENT AND EROSION CONTROL PLAN. THE CONTRACTOR SHALL MAINTAIN ALL APPROVED SEDIMENT AND EROSION CONTROL MEASURES THROUGHOUT THE ENTIRE PROJECT, AS REQUIRED. THE CONTRACTOR SHALL RECEIVE APPROVAL FROM THE EROSION CONTROL INSPECTOR, AS REQUIRED BY GOVERNING AGENCIES, PRIOR TO ANY CLEARING.

3. CLEAR AND GRUB AREA WITHIN THE LIMITS OF THE PROPOSED DAM CONSTRUCTION. ALL TREES AND THEIR ENTIRE ROOT SYSTEMS MUST BE REMOVED FROM THE DAM FOOTPRINT AREA AND BACKFILLED WITH SUITABLE SOIL MATERIAL. THE BACKFILLED AREAS SHALL BE COMPACTED TO THE SAME STANDARDS AS THE DAM EMBANKMENT. THE REMAINING AREA OF THE EMBANKMENT SHALL BE STRIPPED TO A SUITABLE DEPTH AS DIRECTED BY THE ON-SITE GEOTECHNICAL ENGINEER. ANY RESIDUAL SOILS TO BE LEFT IN PLACE MUST BE WELL SCARIFIED TO PROMOTE BONDING OF THE NEW EMBANKMENT FILL. NO EMBANKMENT MATERIAL SHALL BE PLACED FOR THE DAM OR KEY TRENCH UNTIL APPROVAL OF THE DAM SUBGRADE IS OBTAINED FROM THE ON-SITE GEOTECHNICAL ENGINEER.

4. EXCAVATE FOR THE NEW KEY TRENCH ALONG THE CENTERLINE OF THE PROPOSED DAM EMBANKMENT. THE TRENCH SHALL EXTEND A MINIMUM OF 5 FT BELOW EXISTING GRADE OR 2 FT BELOW THE 24"Ø RCP OUTLET BARREL AND SHALL HAVE A MINIMUM BOTTOM WIDTH OF 5 FEET. THE KEY TRENCH SIDESLOPES SHALL BE A MINIMUM OF 1:1 (H:V). WHEN EXCAVATING THE KEY TRENCH, IF ANY DEBRIS IS ENCOUNTERED TO AN EXTENT THAT SUCH DEBRIS MAY EXIST IN OTHER INSITU PORTIONS OF THE DAM EMBANKMENT, IT SHOULD ALSO BE REMOVED. THE KEY TRENCH SHALL BE COMPACTED TO THE SAME SPECIFICATION LISTED IN ITEM 4 OF THE SECTION TITLED "BERM AND SOIL COMPACTION SPECIFICATIONS." DEPENDING UPON ON-SITE SOIL CONDITIONS ENCOUNTERED DURING EXCAVATION, THE ON-SITE GEOTECHNICAL ENGINEER MAY VARY THE DEPTH AND DIMENSIONS OF THE KEY TRENCH AS DEEMED NECESSARY. THE ON-SITE GEOTECHNICAL ENGINEER SHALL RETAIN DOCUMENTATION OF ANY VARIATION FOR FUTURE AS-BUILT SUBMITTALS TO THE TOWN OF ROLESVILLE.

5. BEGIN PLACEMENT OF BACKFILL WITHIN THE KEY TRENCH. THE KEY TRENCH SHALL BE COMPACTED TO THE SPECIFICATIONS LISTED ITEM 4 OF THE SECTION TITLED "BERM AND SOIL COMPACTION SPECIFICATIONS." THE KEY TRENCH SHALL BE TESTED PER THE SPECIFICATIONS LISTED IN THAT SECTION.

6. PRIOR TO INSTALLATION, SUBGRADE CONDITIONS ALONG THE SPILLWAY PIPES SHOULD BE EVALUATED BY THE ON-SITE GEOTECHNICAL ENGINEER TO ASSESS WHETHER SUITABLE BEARING CONDITIONS EXIST AT THE SUBGRADE LEVEL. SHOULD SOFT OR OTHERWISE UNSUITABLE CONDITIONS BE ENCOUNTERED ALONG THE PIPE ALIGNMENTS, THESE MATERIALS SHOULD BE UNDERCUT AS DIRECTED BY THE GEOTECHNICAL ENGINEER. THE UNDERCUT MATERIALS SHALL BE REPLACED WITH ADEQUATELY COMPACTED STRUCTURAL FILL, LEAN CONCRETE OR FLOWABLE FILL AS DIRECTED BY THE ON-SITE GEOTECHNICAL ENGINEER.

7. IN ORDER TO HELP PROTECT THE SOIL SUBGRADE FROM DETERIORATION (DUE TO EXPOSURE, RAINFALL, SEEPAGE, AND RUNOFF) BEFORE THE CRADLE CAN BE POURED, IT IS STRONGLY RECOMMENDED THAT A 3" TO 4" THICK CONCRETE MUD MAT BE POURED OVER THE SUBGRADE ONCE IT IS APPROVED BY THE ON-SITE GEOTECHNICAL ENGINEER. THE MUD MAT WILL ALSO PROVIDE BEARING FOR THE BLOCKS THAT TEMPORARILY SUPPORT THE SPILLWAY PIPE UNTIL THE CRADLE CAN BE POURED. THE METHOD OF BLOCK SUPPORT FOR THE PIPE PROPOSED BY THE CONTRACTOR SHOULD BE SUBMITTED TO THE JOHN R. McADAMS COMPANY FOR REVIEW.

8. BEGIN CONSTRUCTION OF THE NEW EMBANKMENT. FILL MATERIALS SHALL BE PLACED IN MAXIMUM 8" THICK LIFTS PRIOR TO COMPACTION, UNLESS DIRECTED OTHERWISE BY THE ON-SITE GEOTECHNICAL ENGINEER. FILL LIFTS SHALL BE CONTINUOUS OVER THE ENTIRE LENGTH OF FILL. IF IT IS NECESSARY, THE EMBANKMENT FILL MATERIAL WILL BE OVERBUILT IN HORIZONTAL LIFTS AND CUT BACK TO FINAL GRADE IN ORDER TO ACHIEVE PROPER COMPACTION.

9. AS CONSTRUCTION OF THE EMBANKMENT MOVES FORWARD, IT WILL BE NECESSARY TO INSTALL THE CONCRETE CRADLE. SEE NOTE ON CRADLE DETAIL (SHEET C9.02). THIS MAY BE CONSTRUCTED USING ONE OF THE FOLLOWING METHODS:

   A. IF THE PROPOSED STRUCTURAL FILL MATERIAL IS UTILIZED AS THE FORMWORK FOR THE CONCRETE CRADLE, THEN THE STRUCTURAL FILL SHOULD BE INSTALLED AND COMPACTED UP TO THE TOP OF CONCRETE CRADLE ELEVATION. ONCE THE STRUCTURAL FILL REACHES THE NEXT DOWNSTREAM JUNCTION BOX OR HEADWALL AND IS COMPACTED TO THE ELEVATION OF THE TOP OF THE CONCRETE CRADLE, EXCAVATE THE CONCRETE CRADLE TRENCH PER THE PROVIDED DETAILS AND CONSTRUCT THE CONCRETE CRADLE AS PER THE PROVIDED CONCRETE CRADLE DETAIL.

   B. IF THE PROPOSED STRUCTURAL FILL IS NOT UTILIZED AS THE FORMWORK FOR THE CONCRETE CRADLE, THEN PRIOR TO CONSTRUCTING THE STRUCTURAL FILL EMBANKMENT, THE FORMWORK FOR THE CONCRETE CRADLE SHOULD BE INSTALLED ON EXISTING GROUND AND/OR THE MUD MAT. THE CONCRETE CRADLE SHALL BE CONSTRUCTED PER THE PROVIDED DETAILS

10. INSTALL RISER / BARREL ASSEMBLY, ALONG WITH THE EMERGENCY DRAIN SYSTEM. INSTALL 24" RCP OUTLET BARREL SPILLWAY FILTER FROM THE DETAILS SHOWN ON SHEET C9.02.

11. CONSTRUCT EMBANKMENT PER SPECIFICATIONS LISTED IN THE SECTION TITLED "BERM AND SOIL COMPACTION SPECIFICATIONS" AND REQUIREMENTS OF THE ON-SITE GEOTECHNICAL ENGINEER. ALL CHARACTERISTICS OF THE EMBANKMENT FILL MATERIAL SHALL MEET THE STANDARDS SET FORTH IN "BERM AND SOIL COMPACTION SPECIFICATIONS", INCLUDING COMPACTION AND MOISTURE REQUIREMENTS. IF NECESSARY TO ACHIEVE PROPER COMPACTION, THE EMBANKMENT FILL MATERIAL WILL BE OVERBUILT IN HORIZONTAL LIFTS AND CUT BACK TO PROPER FINAL GRADE. ANY HAND COMPACTION ACTIVITIES AROUND SPILLWAY OR DRAIN STRUCTURES SHALL BE CONDUCTED IN 4-INCH LOOSE LIFTS AND BE TO THE SAME COMPACTION AND MOISTURE REQUIREMENTS AS THE ENTIRE EMBANKMENT. ALL COMPACTION AND MOISTURE TESTING SHALL BE CARRIED OUT AS DIRECTED BY THE ON-SITE GEOTECHNICAL ENGINEER AND AS LISTED IN THE SECTION TITLED "BERM AND SOIL COMPACTION SPECIFICATIONS".

12. UPON COMPLETION OF DAM EMBANKMENT, PROMPTLY STABILIZE AND SEED DAM EMBANKMENT PER SEEDING SCHEDULE. PERMANENT GROUND COVER SHALL BE ESTABLISHED PER THE PERMANENT SEEDING SCHEDULE FOUND ON SHEET C9.03.

13. SCHEDULE A FINAL AS-BUILT INSPECTION AND AS-BUILT SURVEY WITH THE ENGINEER AND SURVEYOR. AN AS-BUILT INSPECTION AND SURVEY SHALL BE SCHEDULED BEFORE IMPOUNDING WATER IN THE FACILITY AND A MINIMUM OF 60 DAYS PRIOR TO THE ANTICIPATED DATE OF CERTIFICATION APPROVAL. ANY COMMENTS OR DEFICIENCIES IN THE SCM CONSTRUCTION MUST BE CORRECTED TO THE SATISFACTION OF THE ENGINEER AND OWNER BEFORE CERTIFICATION SHALL BE GRANTED.

BERM AND SOIL COMPACTION SPECIFICATIONS

1. PRIOR TO CONSTRUCTION, THE ON-SITE GEOTECHNICAL ENGINEER SHALL IDENTIFY BORROW / FILL AREAS AND VERIFY THEIR SUITABILITY FOR USE WITHIN THE DAM EMBANKMENT. ALSO, THE ON-SITE GEOTECHNICAL ENGINEER SHALL PERFORM STANDARD PROCTORS ON THE PROPOSED BORROW MATERIAL TO ENSURE THAT OPTIMUM MOISTURE CONTENT AND COMPACTION CAN BE ACHIEVED / CONTROLLED DURING CONSTRUCTION.

2. ALL FILL MATERIALS TO BE USED FOR THE DAM EMBANKMENT SHALL BE TAKEN FROM BORROW AREAS APPROVED BY THE ON-SITE GEOTECHNICAL ENGINEER. THE FILL MATERIAL SHALL BE FREE FROM ROOTS, STUMPS, WOOD, STONES GREATER THAN 6", AND FROZEN OR OTHER OBJECTIONABLE MATERIAL. THE FOLLOWING SOIL TYPES ARE SUITABLE FOR USE AS FILL WITHIN THE DAM EMBANKMENT AND KEY TRENCH: ML AND CL. ALL FILL MATERIALS SHALL BE APPROVED BY THE ONSITE GEOTECHNICAL ENGINEER FOR THE INTENDED USE.

3. FILL PLACEMENT FOR THE EMBANKMENT SHALL NOT EXCEED A MAXIMUM 8" LIFT (UNCOMPACTED). EACH LIFT SHALL BE CONTINUOUS FOR THE ENTIRE LENGTH OF EMBANKMENT. BEFORE PLACEMENT OF FILL FOR THE BERM SECTION, ALL UNSUITABLE MATERIAL SHALL BE REMOVED AND THE SURFACE PROPERLY PREPARED FOR FILL PLACEMENT. FILL MATERIAL ADJACENT TO ALL SPILLWAY AND DRAINAGE STRUCTURES SHALL BE PLACED IN 4-INCH (UNCOMPACTED) LIFTS AND HAND-COMPACTED TO THE SAME COMPACTION AND MOISTURE REQUIREMENTS AS THE ENTIRE EMBANKMENT.

4. ALL FILL SOILS USED IN THE EMBANKMENT CONSTRUCTION SHALL BE COMPACTED TO AT LEAST 95% OF THE STANDARD PROCTOR MAXIMUM DRY DENSITY (ASTM D-698). THE FILL SOILS SHALL BE COMPACTED AT A MOISTURE CONTENT WITHIN -1 TO +3 PERCENT OF ITS OPTIMUM MOISTURE CONTENT. COMPACTION TESTS SHALL BE PERFORMED BY THE ON-SITE GEOTECHNICAL ENGINEER DURING CONSTRUCTION TO VERIFY THAT THE PROPER COMPACTION LEVEL HAS BEEN REACHED. THE FILL SHOULD BE COMPACTED USING A SHEEPSFOOT TYPE COMPACTOR. IN ORDER TO PREVENT DAMAGE TO THE PIPE, NO COMPACTION EQUIPMENT SHALL CROSS ANY PIPE UNTIL MINIMUM COVER IS ESTABLISHED ALONG THE PIPE.

5. THE DESIGN ENGINEER SHALL BE PROVIDED WITH REPORTS AND CERTIFICATION, BY THE ON-SITE GEOTECHNICAL ENGINEER, THAT THE GEOTECHNICAL ASPECTS OF THE FACILITY HAVE BEEN CONSTRUCTED PER PLAN. THIS CERTIFICATION MUST ADDRESS THE TESTING FOR MATERIALS AND COMPACTION OF THE DAM EMBANKMENT AND SPILLWAY. THESE REPORTS AND CERTIFICATION WILL BE NEEDED DURING THE AS-BUILT CERTIFICATION PROCESS FOR THIS STORMWATER CONTROL MEASURE. THEREFORE, IT SHALL BE THE CONTRACTOR'S RESPONSIBILITY TO COORDINATE TESTING AND OBSERVATION WITH THE ON-SITE GEOTECHNICAL ENGINEER.

6. TESTING OF THE NEW FILL MATERIALS SHALL BE PERFORMED TO VERIFY THAT THE RECOMMENDED LEVEL OF COMPACTION IS ACHIEVED DURING CONSTRUCTION. THEREFORE, ONE DENSITY TEST SHALL BE PERFORMED FOR EVERY 2,500 SQUARE FEET OF AREA FOR EVERY LIFT OF FILL OR AS RECOMMENDED BY THE ON-SITE GEOTECHNICAL ENGINEER.

7. TESTING WILL BE REQUIRED ALONG THE 24"Ø RCP OUTLET BARREL AT A FREQUENCY OF ONE TEST PER 25 LF OF PIPE PER VERTICAL FOOT OF FILL OR AS DIRECTED BY THE ON-SITE GEOTECHNICAL ENGINEER.

STATEMENT OF RESPONSIBILITY

1. ALL REQUIRED MAINTENANCE AND INSPECTIONS OF THE STORMWATER CONTROL MEASURE SHALL BE THE RESPONSIBILITY OF THE OWNER, PER THE EXECUTED OPERATION AND MAINTENANCE AGREEMENT FOR THIS FACILITY.

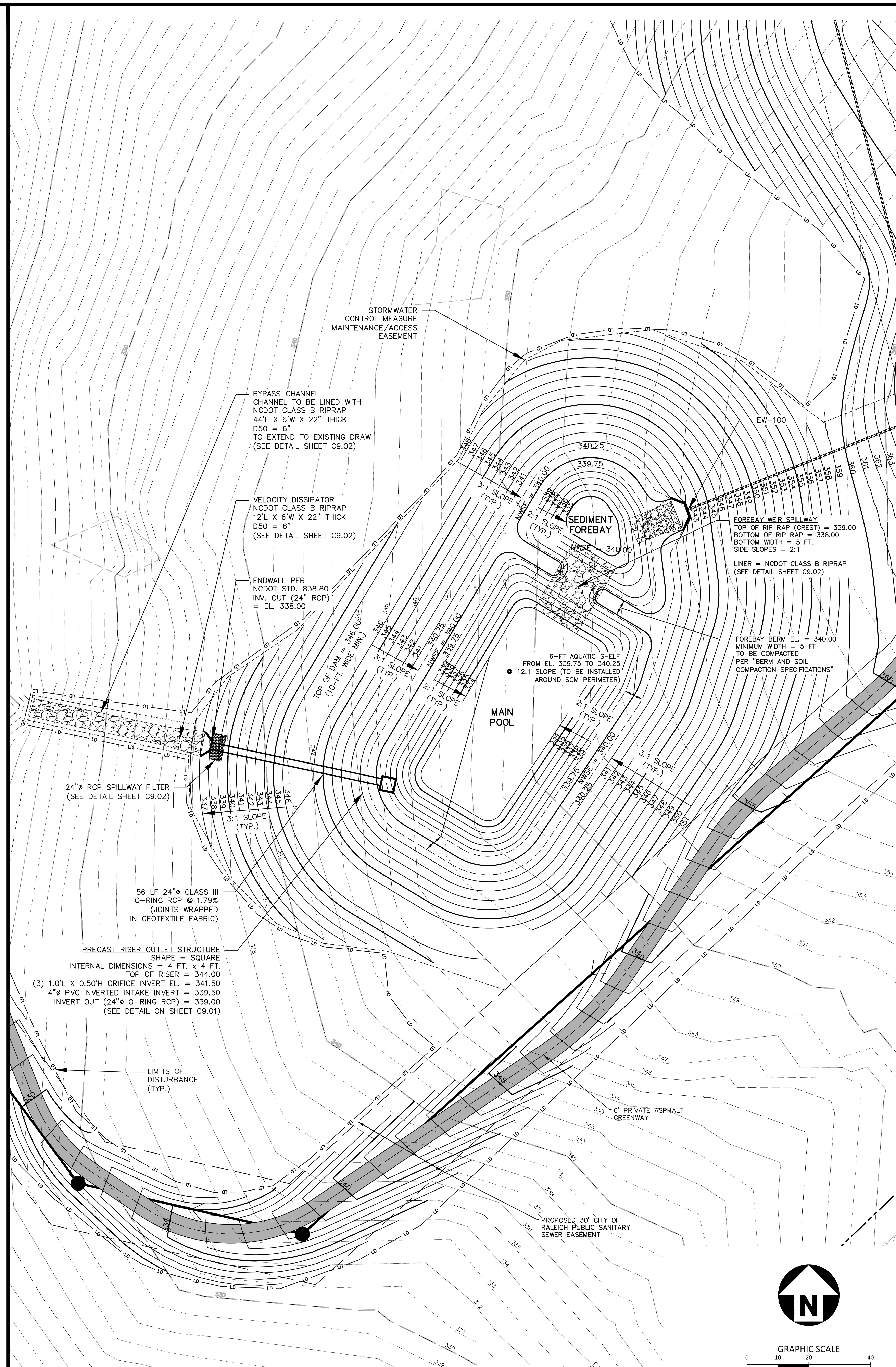

STORMWATER CONTROL MEASURE 'M' PLAN VIEW
1" = 20'

FINAL DRAWING - NOT RELEASED FOR CONSTRUCTION

MCADAMS
The John R. McAdams Company, Inc.
2905 Meridian Parkway
Durham, NC 27713

phone 919. 361. 5000
fax 919. 361. 2269
license number: C-0293, C-187

www.mcadamsco.com

CLIENT

ASHTON WOODS
5711 SIX FORKS ROAD, SUITE 300
RALEIGH, NORTH CAROLINA 27609

ASHTON WOODS

THE POINT PHASES 11-13
CONSTRUCTION DRAWINGS
EAST YOUNG STREET
TOWN OF ROLESVILLE, WAKE FOREST TOWNSHIP, WAKE COUNTY, NORTH CAROLINA

CD XX-XX

NORTH CAROLINA PROFESSIONAL SEAL 47257 ENGINEER KATHERINE E. GARCIA
PRELIMINARY NOT FOR CONSTRUCTION

REVISIONS

NO.	DATE

PLAN INFORMATION

PROJECT NO.	AWH-20000
FILENAME	AWH20000 - SCM M
CHECKED BY	KEG
DRAWN BY	ABT
SCALE	1" = 20'
DATE	10.26.2022

SHEET

STORMWATER CONTROL MEASURE 'M' PLAN VIEW

C9.00

M:\Projects\AWH\AWH-20000\04-Production\Water Resources\North Site\Current Drawings\AWH20000 - SCM M.dwg, 10/27/2022 9:14:46 AM, Alex Thierer

NOTE:

1. REMOVED TOPSOIL SHALL BE STOCKPILED FOR USE IN PLANTING (SEEDING) THE DAM EMBANKMENT ONCE FINAL GRADES (AS SHOWN ON THE GRADING PLAN) HAVE BEEN ESTABLISHED WITH COMPACTED FILL. PRIOR TO TOPSOIL INSTALLATION, THE CONTRACTOR SHALL SCARIFY THE TOP 2– TO 3–INCHES OF THE BERMN SECTION TO PROMOTE BONDING OF THE TOPSOIL WITH THE COMPACTED FILL. THE TOPSOIL DEPTH SHALL RANGE FROM 3– TO 4–INCHES ON THE DAM EMBANKMENT.

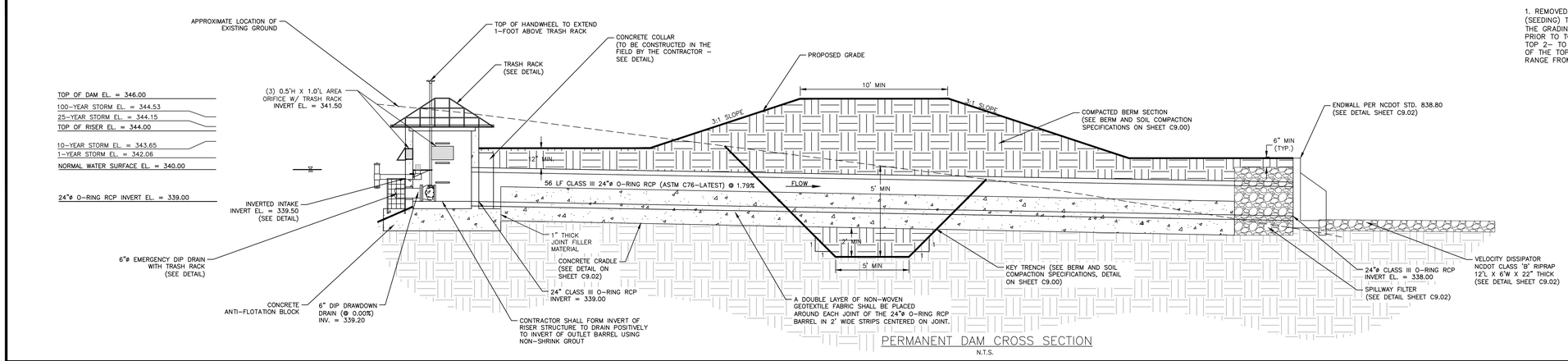

PERMANENT DAM CROSS SECTION

N.T.S.

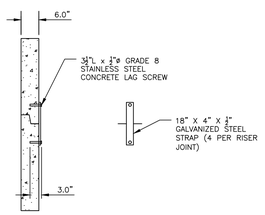

RISER JOINT CONNECTION DETAIL

N.T.S.

NOTES:

1. CONCRETE ANTI-FLOTATION BLOCK TO BE PROVIDED WITH MINIMUM TEMPERATURE AND SHRINKAGE STEEL REINFORCEMENT.

2. TRASH RACKS NOT SHOWN FOR CLARITY.

3. THE NUMBER OF GUIDES FOR THE VALVE STEM SHALL BE DETERMINED IN THE FIELD BY THE CONTRACTOR. THE VALVE STEM MUST BE OPERABLE FROM THE TOP OF THE RISER VIA THE HANDWHEEL WITH AN INSIGNIFICANT AMOUNT OF PLAY IN THE VALVE STEM.

4. CONTRACTOR SHALL PROVIDE A JOINT IN THE OUTLET BARREL NO MORE THAN 5-FT FROM THE RISER.

5. THE FIRST JOINT OF THE PIPE SHALL LINE UP WITH THE JOINT BETWEEN THE CONCRETE CRADLE AND ANTI-FLOAT BLOCK

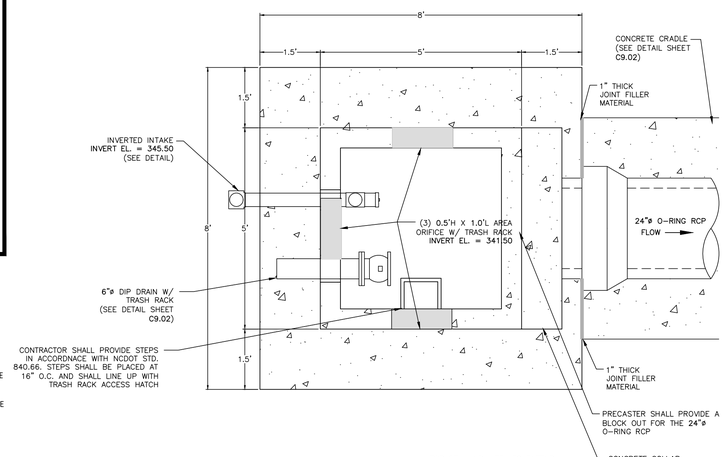

NOTES:
1. ALL REBAR TO BE #4 REBAR.
2. ALL REBAR AND ANGLES TO BE HOT–DIPPED GALVANIZED AND BE PROVIDED WITH AN EPOXY COATING.
3. THE HOT–DIPPED, GALVANIZED 2"x2"x1/4" ANGLES SHALL BE WELDED TO THE REBAR TRASH RACK. ONCE WELDED, THE ENTIRE ASSEMBLY SHALL BE PLACED ONTO THE RISER WITH ANGLES SITTING DIRECTLY ON TOP OF RISER.
4. TRASH RACK IS TO BE SECURELY FASTENED TO THE SPILLWAY RISER WITH A MINIMUM OF FOUR CORROSION–RESISTANT ANCHORS.
5. ACCESS HATCH SHALL ALIGN WITH STEPS IN RISER.

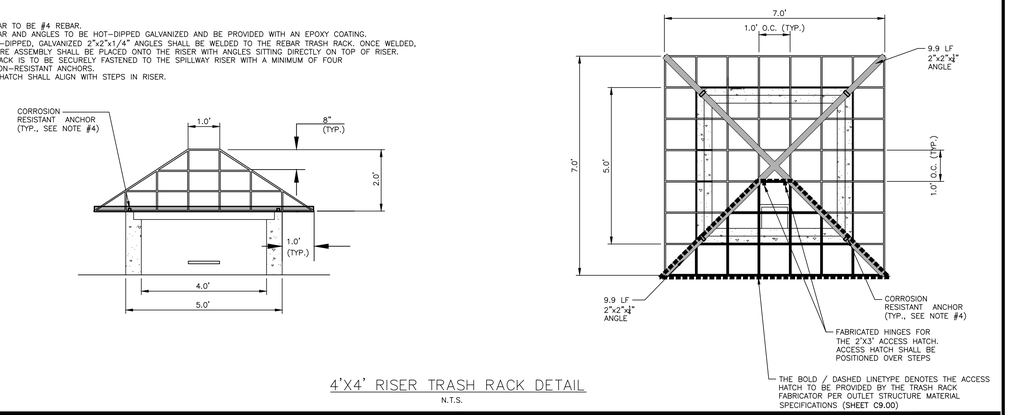

4'X4' RISER TRASH RACK DETAIL

N.T.S.

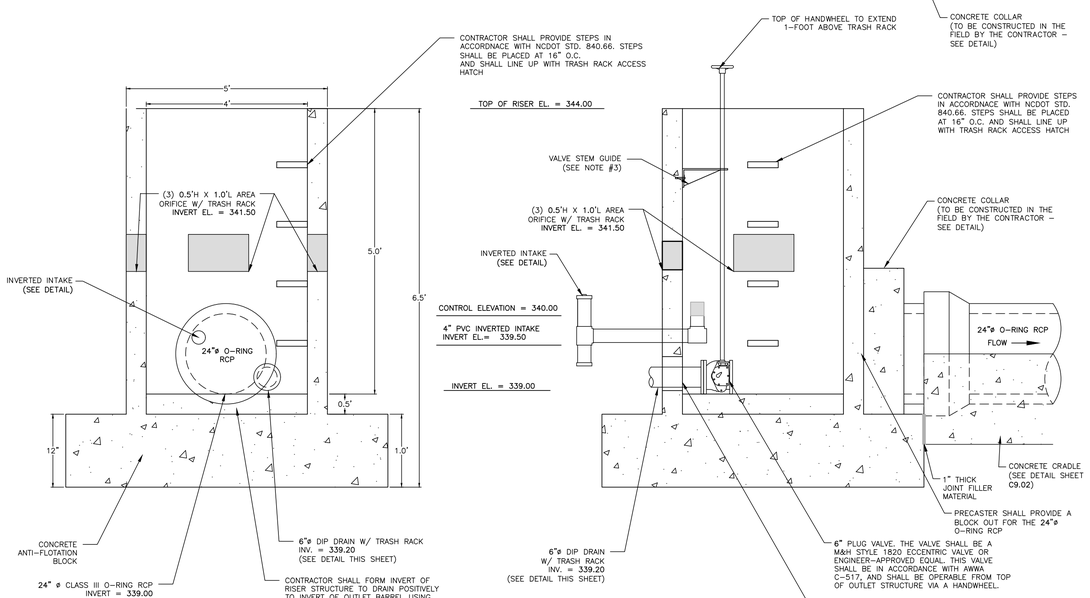

PERMANENT OUTLET STRUCTURE DETAILS

N.T.S.

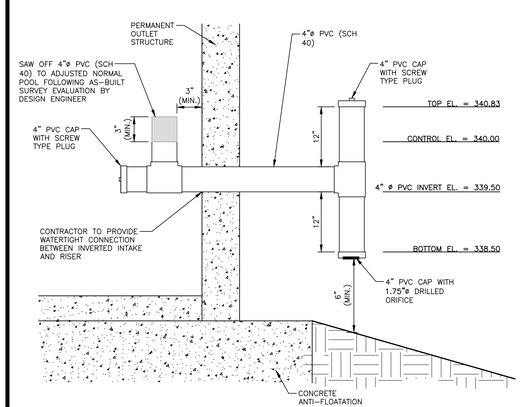

INVERTED INTAKE OUTLET DETAIL

N.T.S.

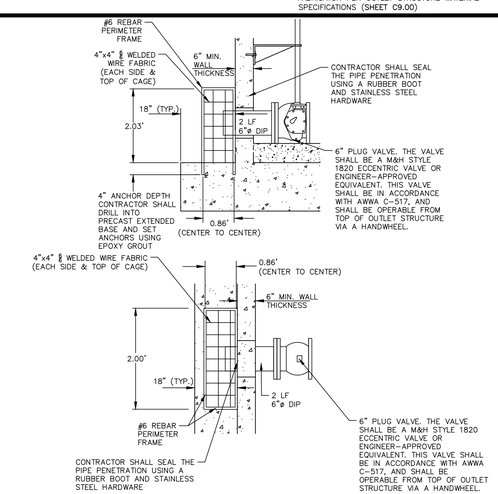

6"ø EMERGENCY DIP DRAIN TRASH RACK DETAILS

N.T.S.

FINAL DRAWING - NOT RELEASED FOR CONSTRUCTION

M:\Projects\AWH\AWH-20000\04-Production\Water Resource\North Site\Current Drawings\AWH20000 - SCM M.dwg, 10/27/2022 9:14:56 AM, Alex Thierer

McADAMS
The John R. McAdams Company, Inc.
2905 Meridian Parkway
Durham, NC 27713

phone 919. 361. 5000
fax 919. 361. 2269
license number: C-0293, C-187

www.mcadamsco.com

CLIENT

ASHTON WOODS
5711 SIX FORKS ROAD, SUITE 300
RALEIGH, NORTH CAROLINA 27609

ASHTON WOODS

THE POINT PHASES 11-13

CONSTRUCTION DRAWINGS
EAST YOUNG STREET
TOWN OF ROLESVILLE, WAKE FOREST TOWNSHIP, WAKE COUNTY, NORTH CAROLINA

CD XX-XX

NORTH CAROLINA PROFESSIONAL SEAL 47257 ENGINEER JEREMIE E. GARCIA
PRELIMINARY NOT FOR CONSTRUCTION

REVISIONS

NO. DATE

PLAN INFORMATION

PROJECT NO.	AWH-20000
FILENAME	AWH20000 - SCM M
CHECKED BY	KEG
DRAWN BY	ABT
SCALE	N.T.S.
DATE	10.26.2022

SHEET

STORMWATER CONTROL MEASURE 'M' DETAILS

C9.01

NOTES:

1. A FILTER BLANKET IS TO BE INSTALLED BETWEEN THE RIPRAP AND SOIL FOUNDATION. THE FILTER BLANKET WILL CONSIST OF A MINIMUM 4" THICK LAYER OF STONE (NCDOT #57) UNDERLAIN WITH MIRAFI FILTER WEAVE 700 OR ENGINEER-APPROVED EQUIVALENT.

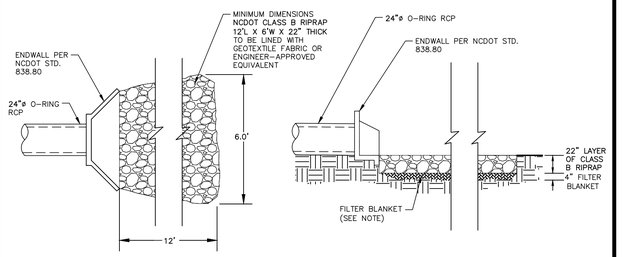

OUTLET BARREL VELOCITY DISSIPATER

N.T.S.

NOTES:

1. ALL REBAR TO BE #4 REBAR.
2. WRAP OUTSIDE OF PIPE WITH VOLCLAY WATERSTOP-RX® 101 (OR PRE-APPROVED EQUIVALENT) AT THE FACE OF THE PRECAST STRUCTURE WALL. PROVIDE 6" OVER LAP ON THE BOTTOM OF THE PIPE.

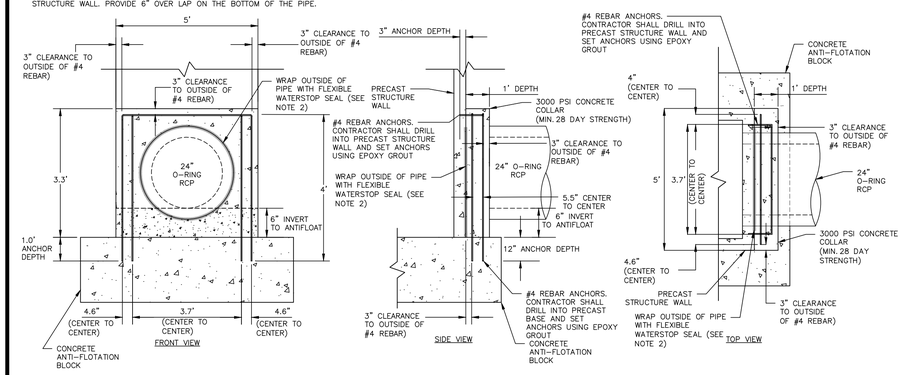

24"ø CONCRETE COLLAR DETAIL

N.T.S.

NOTES:
INSTALL ALL STEPS PROTRUDING 4" FROM INSIDE FACE OF STRUCTURE WALL.
STEPS DIFFERING IN DIMENSIONS, CONFIGURATION, OR MATERIALS FROM THOSE SHOWN MAY ALSO BE USED PROVIDED THE CONTRACTOR HAS FURNISHED THE ENGINEER WITH DETAILS OF THE PROPOSED STEPS AND HAS RECEIVED WRITTEN APPROVAL FROM THE ENGINEER FOR THE USE OF SUCH STEPS.

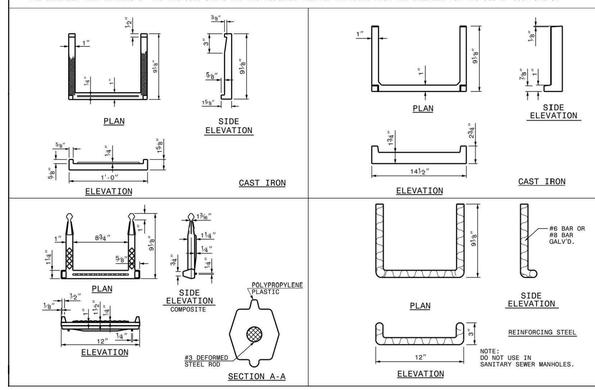

MAINTENANCE ACCESS DETAILS

N.T.S.

STATE OF NORTH CAROLINA DEPT. TRANSPORTATION DIVISION OF HIGHWAYS RALEIGH, N.C.

I-18

ROADWAY STANDARD DRAWING FOR **DRAINAGE STRUCTURE STEPS**

SHEET 1 OF 1

840.66

NOTE:

1. HAVILAND DRAINAGE PRODUCTS 4" ALUMINUM ANIMAL GUARD ITEM NUMBER ACSS04 (OR ENGINEER APPROVED EQUIVALENT) TO BE INSTALLED AT OUTLET OF 4" HDPE PIPES

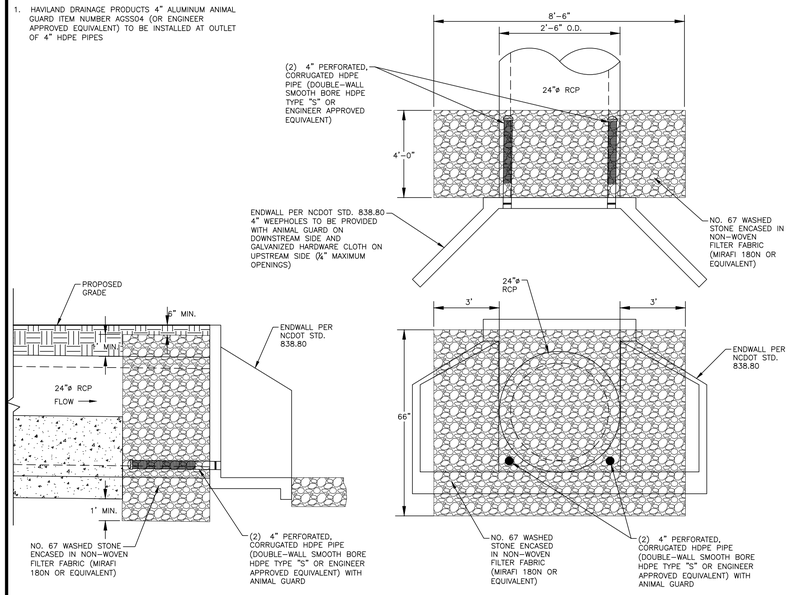

SPILLWAY FILTER DETAIL

N.T.S.

NOTES:

1. ATTACH TRASH RACK WITH (4) HOT DIPPED GALVANIZED STEEL CLAMPS. EACH CLAMP ATTACHED TO WEIR BOX BY (2) 4"x1/4" CONCRETE ANCHOR BOLTS. EACH CLAMP SHALL BE COATED WITH AN EPOXY COATING.
2. ALL REBAR TO BE GALVANIZED #4 REBAR WITH AN EPOXY COATING.
3. BARS TO EXTEND ON BOTTOM OF TRASH RACK.

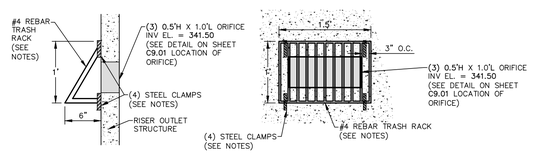

AREA ORIFICE TRASH RACK DETAIL

N.T.S.

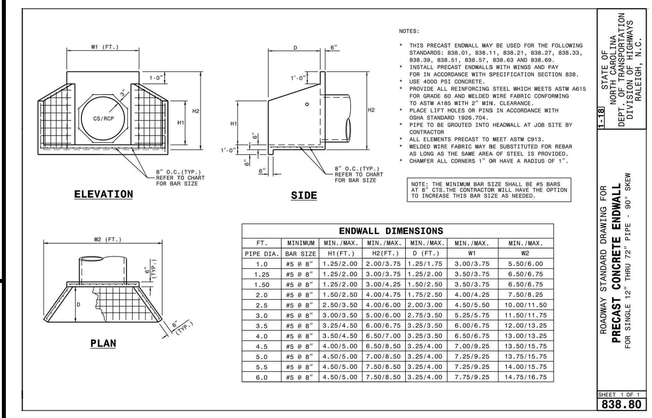

NOTES:

- THIS PRECAST ENDWALL MAY BE USED FOR THE FOLLOWING STANDARDS: 838.01, 838.11, 838.21, 838.27, 838.33, 838.39, 838.51, 838.57, 838.63 AND 838.69.
- INSTALL PRECAST ENDWALLS WITH WINGS AND PAY FOR IN ACCORDANCE WITH SPECIFICATION SECTION 838.
- USE 4000 PSI CONCRETE.
- PROVIDE ALL REINFORCING STEEL WHICH MEETS ASTM A615 FOR GRADE 60 AND WELDED WIRE FABRIC CONFORMING TO ASTM A185 WITH 2" MIN. CLEARANCE.
- PLACE LIFT HOLES OR PINS IN ACCORDANCE WITH OSHA STANDARD 1926.704.
- PIPE TO BE GROUTED INTO HEADWALL AT JOB SITE BY CONTRACTOR
- ALL ELEMENTS PRECAST TO MEET ASTM C913.
- WELDED WIRE FABRIC MAY BE SUBSTITUTED FOR REBAR AS LONG AS THE SAME AREA OF STEEL IS PROVIDED.
- CHAMFER ALL CORNERS 1" OR HAVE A RADIUS OF 1".

NOTE: THE MINIMUM BAR SIZE SHALL BE #5 BARS AT 6" CTS.THE CONTRACTOR WILL HAVE THE OPTION TO INCREASE THIS BAR SIZE AS NEEDED.

ENDWALL DIMENSIONS

FT.	MINIMUM	MIN./MAX.	MIN./MAX.	MIN./MAX.	MIN./MAX.	MIN./MAX.
PIPE DIA.	BAR SIZE	H1(FT.)	H2(FT.)	D (FT.)	W1	W2
1.0	#5 @ 8"	1.25/2.00	2.00/3.75	1.25/1.75	3.00/3.75	5.50/6.00
1.25	#5 @ 8"	1.25/2.00	3.00/3.75	1.25/2.00	3.50/3.75	6.50/6.75
1.50	#5 @ 8"	1.25/2.00	3.00/4.25	1.50/2.50	3.50/3.75	6.50/6.75
2.0	#5 @ 8"	1.50/2.50	4.00/4.75	1.75/2.50	4.00/4.25	7.50/8.25
2.5	#5 @ 8"	2.50/3.50	4.00/6.00	2.00/3.00	4.50/5.50	10.00/11.50
3.0	#5 @ 8"	3.00/3.50	5.00/6.00	2.75/3.50	5.25/5.75	11.50/11.75
3.5	#5 @ 8"	3.25/4.50	5.00/6.75	3.25/3.50	6.00/6.75	12.00/13.25
4.0	#5 @ 8"	3.50/4.50	6.50/7.00	3.25/3.50	6.50/6.75	13.00/13.25
4.5	#5 @ 8"	4.00/5.00	6.50/8.50	3.25/4.00	7.00/9.25	13.50/15.75
5.0	#5 @ 8"	4.50/5.00	7.00/8.50	3.25/4.00	7.25/9.25	13.75/15.75
5.5	#5 @ 8"	4.50/5.00	7.50/8.50	3.25/4.00	7.25/9.25	14.00/15.75
6.0	#5 @ 8"	4.50/5.00	7.50/8.50	3.25/4.00	7.75/9.25	14.75/16.75

STATE OF NORTH CAROLINA DEPT. TRANSPORTATION DIVISION OF HIGHWAYS RALEIGH, N.C.

I-18

ROADWAY STANDARD DRAWING FOR **PRECAST CONCRETE ENDWALL** FOR SINGLE 12" THRU 72" PIPE - 90° SKEW

SHEET 1 OF 1

838.80

ENDWALL DETAILS

N.T.S.

NOTES:

1. ALL REINFORCING STEEL IN RISER ANTI-FLOTATION BLOCK TO BE GRADE 60 #4 BARS FOR HORIZONTAL CROSSING AND GRADE 60 #4 BARS FOR VERTICAL CONNECTIONS.
2. INSIDE OF RISER BOTTOM TO BE FORMED WITH NON-SHRINK GROUT TO INVERT ELEVATION OF BARREL.
3. ALL PIPE PENETRATIONS THROUGH THE CONCRETE RISER STRUCTURE SHALL BE MADE WATERTIGHT.

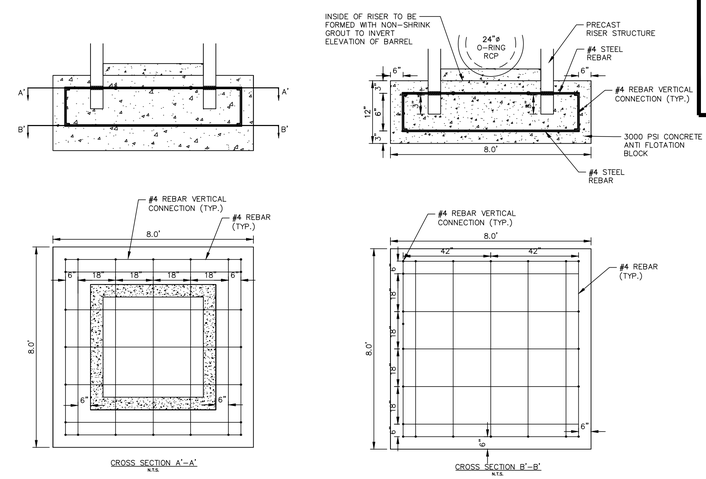

RISER/ANTI-FLOTATION BLOCK CONNECTION

N.T.S.

NOTES:

1. CHANNEL DIMENSION (1.0' DEEP, 6'.0 BOTTOM WIDTH) ARE TO TOP OF RIP-RAP IN CHANNEL. ACTUAL CHANNEL EXCAVATION MUST CONSIDER THICKNESS OF THE RIPRAP AND FILTER FABRIC LINER. BYPASS CHANNEL TO STOP AT TOP OF BANK.
2. A FILTER BLANKET IS TO BE INSTALLED BETWEEN THE RIPRAP AND SOIL FOUNDATION. THE FILTER BLANKET WILL CONSIST OF A MINIMUM 4" THICK LAYER OF STONE (NCDOT #57) UNDERLAIN WITH MIRAFI FILTER WEAVE 700 OR ENGINEER-APPROVED EQUIVALENT.
3. RIPRAP TO EXTEND TO TOP OF CHANNEL WITH 2:1 SIDE SLOPES THROUGHOUT THE EXTENT OF CHANNEL.

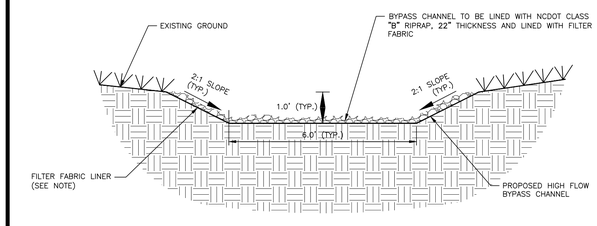

BYPASS CHANNEL DETAIL

N.T.S.

NOTE:

1. CONTRACTOR SHALL PROVIDE A JOINT IN THE OUTLET BARREL NO MORE THAN 5-FT FROM THE RISER.

BARREL PIPE CONCRETE CRADLE CONSTRUCTION SEQUENCE

1. IF OPTION A IS CHOSEN FROM NOTE 9 OF THE OUTLET STRUCTURE MATERIAL SPECIFICATIONS, THEN BRING GRADE OF DAM EMBANKMENT TO SPRINGLINE OF PIPE ELEVATION. IF OPTION B IS CHOSEN FROM NOTE 9 OF THE OUTLET STRUCTURE MATERIAL SPECIFICATIONS, THEN CONSTRUCT FORMWORK FOR CONCRETE CRADLE ON EXISTING GRADE.
2. IF OPTION A IS CHOSEN FROM NOTE 9 OF THE OUTLET STRUCTURE MATERIAL SPECIFICATIONS, THEN EXCAVATE TRENCH FOR CRADLE AND BARREL PER DIMENSIONS ON DRAWINGS. IF OPTION B IS CHOSEN FROM NOTE 9 OF THE OUTLET STRUCTURE MATERIAL SPECIFICATIONS, PROCEED TO STEP 3 BELOW.
3. PLACE BARREL PIPE ON CONCRETE BLOCKS TO GRADE. AT THIS STEP, CONTRACTOR SHALL WRAP A DOUBLE LAYER OF NON-WOVEN GEOTEXTILE FABRIC AROUND EACH JOINT OF THE 24"ø O-RING RCP BARREL IN 2' WIDE STRIPS CENTERED ON JOINT.
4. PLACE CONCRETE FOR CRADLE FOR EACH SECTION FROM ONE SIDE OF THE TRENCH. ALLOW CONCRETE TO FILL ENTIRE AREA UNDER PIPE AND PIPE HAUNCHES AS TO LEAVE NO VOIDS UNDER THE PIPE BEFORE PLACING CONCRETE ON THE OPPOSITE SIDE OF THE TRENCH. PLACE ENTIRE CRADLE AS ONE LIFT (VERTICALLY) PER DRAWINGS.
5. ALLOW CRADLE TO CURE FOR A MINIMUM OF 7 DAYS BEFORE ANY VIBRATING COMPACTION EQUIPMENT IS USED IN THE VICINITY OF THE BARREL PIPE.
6. TRENCH TO BE BACKFILLED IN 5" LIFTS WHEN COMPACTION IS BY HAND. BACKFILL IS IN 8" LIFTS WHEN CONDUCTED BY MACHINE. MINIMUM OF 2 FEET COVER MUST BE PRESENT ON 24"ø RCP BEFORE DRIVING OVER WITH HEAVY EQUIPMENT.

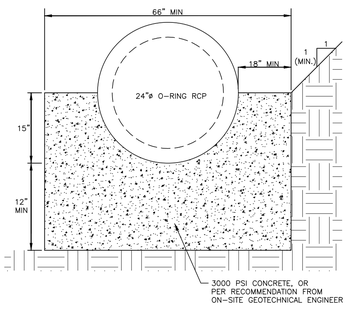

24" CONCRETE CRADLE DETAIL

N.T.S.

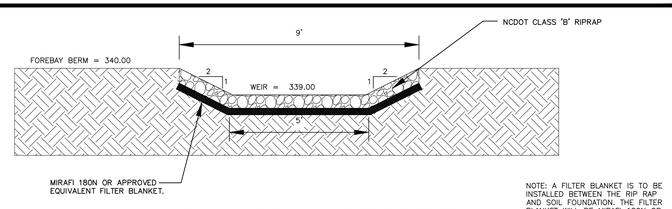

FOREBAY WEIR SPILLWAY CROSS-SECTION

N.T.S.

NOTE: A FILTER BLANKET IS TO BE INSTALLED BETWEEN THE RIP RAP AND SOIL FOUNDATION. THE FILTER BLANKET WILL BE MIRAFI 180N OR APPROVED EQUIVALENT

FINAL DRAWING - NOT RELEASED FOR CONSTRUCTION

M:\Projects\AWH\AWH-20000\04-Production\Water Resources\North Site\Current Drawings\AWH20000 - SCM M.dwg, 10/27/2022 9:15:06 AM, Alex Thierer

MCADAMS

The John R. McAdams Company, Inc.
2905 Meridian Parkway
Durham, NC 27713

phone 919. 361. 5000
fax 919. 361. 2269
license number: C-0293, C-187

www.mcadamsco.com

CLIENT

ASHTON WOODS
5711 SIX FORKS ROAD, SUITE 300
RALEIGH, NORTH CAROLINA 27609

ASHTON WOODS

THE POINT PHASES 11-13

CONSTRUCTION DRAWINGS
EAST YOUNG STREET
TOWN OF ROLESVILLE, WAKE FOREST TOWNSHIP,
WAKE COUNTY, NORTH CAROLINA

CD XX-XX

NORTH CAROLINA PROFESSIONAL SEAL 47257 ENGINEER KATHERINE E. GARCIA

NOT FOR CONSTRUCTION

REVISIONS

NO. DATE

PLAN INFORMATION

PROJECT NO.	AWH-20000
FILENAME	AWH20000 - SCM M
CHECKED BY	KEG
DRAWN BY	ABT
SCALE	N.T.S.
DATE	10.26.2022 :

SHEET

STORMWATER CONTROL MEASURE 'M' DETAILS

C9.02

STORMWATER CONTROL MEASURE 'M' PLANTING PLAN SPECIFICATIONS

LEGEND

QTY.	SYM.	SCIENTIFIC NAME	COMMON NAME	HATCH	TYPE	SPACING	% OF TOTAL AREA	PROVIDED AREA
HIGH MARSH (SHALLOW LAND, TOTAL AREA = 1,220 SF)								
90	SC	SAURURUS CERNUUS	LIZARD'S TAIL		4-INCH CONTAINER	24" O.C.	PROVIDED PERCENTAGE = 30%	360 SF
106	HA	HELENIUM AUTUMNALE	SNEEZEWEED		4-INCH CONTAINER	24" O.C.	PROVIDED PERCENTAGE = 34%	422 SF
110	CG	CHELONE GLABRA	WHITE TURTLEHEAD		4-INCH CONTAINER	24" O.C.	PROVIDED PERCENTAGE = 35%	438 SF
LOW MARSH (SHALLOW WATER, TOTAL AREA = 954 SF)								
59	AC	ACORUS CALAMUS	SWEETFLAG		4-INCH CONTAINER	24" O.C.	PROVIDED PERCENTAGE = 32%	235 SF
79	PP	PONTEDERIA PECTINATUS	PICKEREL WEED		4-INCH CONTAINER	24" O.C.	PROVIDED PERCENTAGE = 34%	315 SF
101	NL	NUPHAR LUTEA SSP. ADVENA	YELLOW POND-LILY		4-INCH CONTAINER	24" O.C.	PROVIDED PERCENTAGE = 34%	404 SF

(ASSUMED 1 STEM PER 4 SF FOR ALL CALCULATIONS)

SOD PREPARATION

1. CHISEL COMPACTED AREAS AND SPREAD TOPSOIL 3-4 INCHES DEEP OVER ADVERSE SOIL CONDITIONS, IF AVAILABLE. TOPSOIL SHOULD BE INCORPORATED INTO THE FINAL GRADING OF THE BASIN SIDE SLOPES AND AQUATIC SHELF. CONTRACTOR SHOULD SCARIFY THE TOP 3-4 INCHES OF THE COMPACTED FILL TO PROMOTE BONDING WITH TOPSOIL.
2. RIP THE ENTIRE AREA TO 6 INCHES DEPTH.
3. REMOVE ALL LOOSE ROCK, ROOTS, AND OTHER OBSTRUCTIONS LEAVING SURFACE REASONABLY SMOOTH AND UNIFORM.
4. PER ONE TIME ONLY, APPLY AGRICULTURAL LIME, FERTILIZER, AND SUPERPHOSPHATE UNIFORMLY AND MIX WITH SOIL.
5. CONTINUE TILLAGE UNTIL A WELL-PULVERIZED, FIRM REASONABLY UNIFORM SODBED IS PREPARED 4 TO 6 INCHES DEEP.
6. SOD ON A FRESHLY PREPARED SODBED AND COVER.
7. INSPECT ALL SODDED AREAS AND MAKE NECESSARY REPAIRS OR RESODDINGS WITHIN THE PLANTING SEASON, IF POSSIBLE. AFTER PERMANENT COVER IS ESTABLISHED.
8. CONSULT CONSERVATION INSPECTOR ON MAINTENANCE TREATMENT.

TEMPORARY SEEDING SCHEDULE

SEEDING DATE	SEEDING MIXTURE	APPLICATION RATE
JAN 1 - MAY 1	RYE (GRAIN)	120 LBS/AC
	KOBE LESPEDEZA	50 LBS/AC
MAY 1 - AUG 15	GERMAN MILLET	40 LBS/AC
AUG 15 - DEC 30	RYE (GRAIN)	120 LBS/AC

SOIL AMENDMENTS
FOLLOW RECOMMENDATIONS OF SOIL TESTS OR APPLY 2,000 LB/AC GROUND AGRICULTURE LIMESTONE AND 750 LB/AC 10-10-10 FERTILIZER (FROM AUG 15 - DEC 30, INCREASE 10-10-10 FERTILIZER TO 1000 LB/AC).

MULCH
APPLY 4000 LB/AC STRAW. ANCHOR STRAW BY TACKING WITH ASPHALT, NETTING, OR A MULCH ANCHORING TOOL. A DISK WITH BLADES SET NEARLY STRAIGHT CAN BE USED AS A MULCH ANCHORING TOOL.

MAINTENANCE
JAN 1 - AUG 15: REFERTILIZE IF GROWTH IS NOT FULLY ADEQUATE. RESEED, REFERTILIZE, AND MULCH IMMEDIATELY FOLLOWING EROSION OR OTHER DAMAGE.

AUG 15 - DEC 30: REPAIR AND REFERTILIZE DAMAGED AREAS IMMEDIATELY. TOP DRESS WITH 50 LB/AC OF NITROGEN IN MARCH. IF IT IS NECESSARY TO EXTEND TEMPORARY COVER BEYOND JUNE 15, OVERSEED WITH 50 LB/AC KOBE LESPEDEZA IN LATE FEBRUARY OR EARLY MARCH.

NOTE: USE THE TEMPORARY SEEDING SCHEDULE ONLY WHEN DATE IS NOT CORRECT TO USE THE PERMANENT SEEDING SCHEDULE.

PERMANENT SEEDING SCHEDULE (DAM EMBANKMENTS)

SEEDING DATE	SEEDING MIXTURE	APPLICATION RATE
MAY 1 - AUG 31	CENTIPEDE RAW	30 LBS/AC
APRIL 1 - SEPT 1	SUMMER MIX (80% HULLED BERUMDA/20% MILLET)	200 LBS/AC
OCT 1 - MARCH 1	FALL MIX (80% TALL FESCUE/20% ANNUAL RYGRASS)	200 LBS/AC

SOIL AMENDMENTS
FOLLOW RECOMMENDATIONS OF SOIL TESTS OR APPLY 4,000 LB/AC GROUND AGRICULTURE LIMESTONE AND 1000 LB/AC 10-10-10 FERTILIZER.

MULCH
APPLY 4000 LB/AC STRAW. ANCHOR STRAW BY TACKING WITH ASPHALT, NETTING, OR A MULCH ANCHORING TOOL. A DISK WITH BLADES SET NEARLY STRAIGHT CAN BE USED AS A MULCH ANCHORING TOOL.

MAINTENANCE
INSPECT AND REPAIR MULCH FREQUENTLY. REFERTILIZE IN LATE WINTER OF THE FOLLOWING YEAR; USE SOIL TESTS OR APPLY 150 LB/AC 10-10-10 FERTLIZER. MOW REGULARLY TO A HEIGHT OF 2-4 INCHES.

NOTE: PERMANENT SEEDING SCHEDULE IS FOR SLOPES OF THE BASIN AND DAM EMBANKMENT.

PLANTING INSTRUCTIONS

PLANTING TECHNIQUES
A. INSURE THAT ROOTS, ONCE REMOVED FROM POT, ARE STRAIGHTENED AND FACE DOWNWARD.
B. CREATE PLANTING AREA FOR EACH PLANT AND EXCAVATE PIT.
C. PLACE PLANTS IN PIT INSURING ROOTS ARE FACING COMPLETELY DOWNWARD.
D. HEEL IN SOIL AROUND PLANT AND PROCEED TO NEXT PLANTING LOCATION.
E. NEWLY PLANTED PLANTS NEED TO BE FASTENED TO THE SUBSTRATE FOR THE ESTABLISHMENT OF NEW ROOTS.
F. ROOTS SHALL BE SPREAD IN THEIR NORMAL POSITION. ALL BROKEN OR FRAYED ROOTS HALL BE CUT OFF CLEANLY.
G. THE DIAMETER OF THE PITS FOR ALL VEGETATIVE STOCK SHALL BE AT LEAST THREE TIMES THE DIAMETER OF THE ROOT MASS. PLANT PIT WALL SHALL BE SCARIFIED PRIOR TO PLANT INSTALLATION.
H. SET THE PLANTS UPRIGHT, IN THE CENTER OF THE PIT. THE BOTTOM OF THE ROOT MASS SHOULD BE RESTING ON UNDISTURBED SOIL.
I. PLACE THE BACKFILL AROUND THE BASE AND SIDES OF THE ROOT MASS, AND WORK EACH LAYER TO SETTLE BACKFILL AND TO ELIMINATE VOIDS AND AIR POCKETS. WHEN PIT IS APPROXIMATELY 2/3 FULL, WATER THOROUGHLY BEFORE PLACING REMAINDER OF THE BACKFILL. WATER AGAIN AFTER PLACING FINAL LAYER OF BACKFILL.
J. BROKEN OR DAMAGED PARTS WILL BE CUT BACK TO UNDAMAGED TISSUE, LEAVING AS MUCH GREEN BASAL TISSUE AS POSSIBLE ABOVE THE ROOTS. IF MORE THAN FIFTY PERCENT (50%) OF THE PLANT IS DAMAGED THEN CONTRACTOR SHALL REPLACE THE PLANT.

CONTAINER STOCK / BARE ROOT
A. STOCK SHALL HAVE BEEN GROWN IN A CONTAINER LONG ENOUGH FOR THE ROOT SYSTEM TO HAVE DEVELOPED SUFFICIENTLY TO HOLD ITS SOIL TOGETHER ONCE REMOVED FROM THE CONTAINER.
B. CONTAINER PLANTS WILL NEED TO BE WATERED REGULARLY AND PLACED IN SHADY CONDITIONS UNTIL PLANTING OCCURS.
C. BARE ROOT PLANTS ARE FOR IMMEDIATE PLANTING, OTHERWISE SEE D) BELOW.
D. IF BARE ROOTS SPECIMENS ARE NOT TO BE PLANTED WITHIN FOUR (4) DAYS, TEMPORARY HOLDING OF BARE ROOT SPECIMENS ARE TO BE COVERED ENTIRELY BY A SUITABLE MEDIUM (ETC. SOIL, SAWDUST, MULCH OR THE LIKE) AND WATERED REGULARLY SO AS TO NOT DRY OUT.

PLANT LOCATIONS
A. NEW PLANTINGS SHALL BE LOCATED WHERE SHOWN ON PLAN EXCEPT WHERE CHANGES HAVE BEEN MADE IN PROPOSED CONSTRUCTION.
B. NECESSARY ADJUSTMENTS SHALL BE MADE ONLY AFTER APPROVAL BY THE OWNER OR THE OWNER'S REPRESENTATIVE.

WATER
WATER SHALL BE POTABLE AND SHALL NOT CONTAIN ELEMENTS TOXIC TO PLANT LIFE.

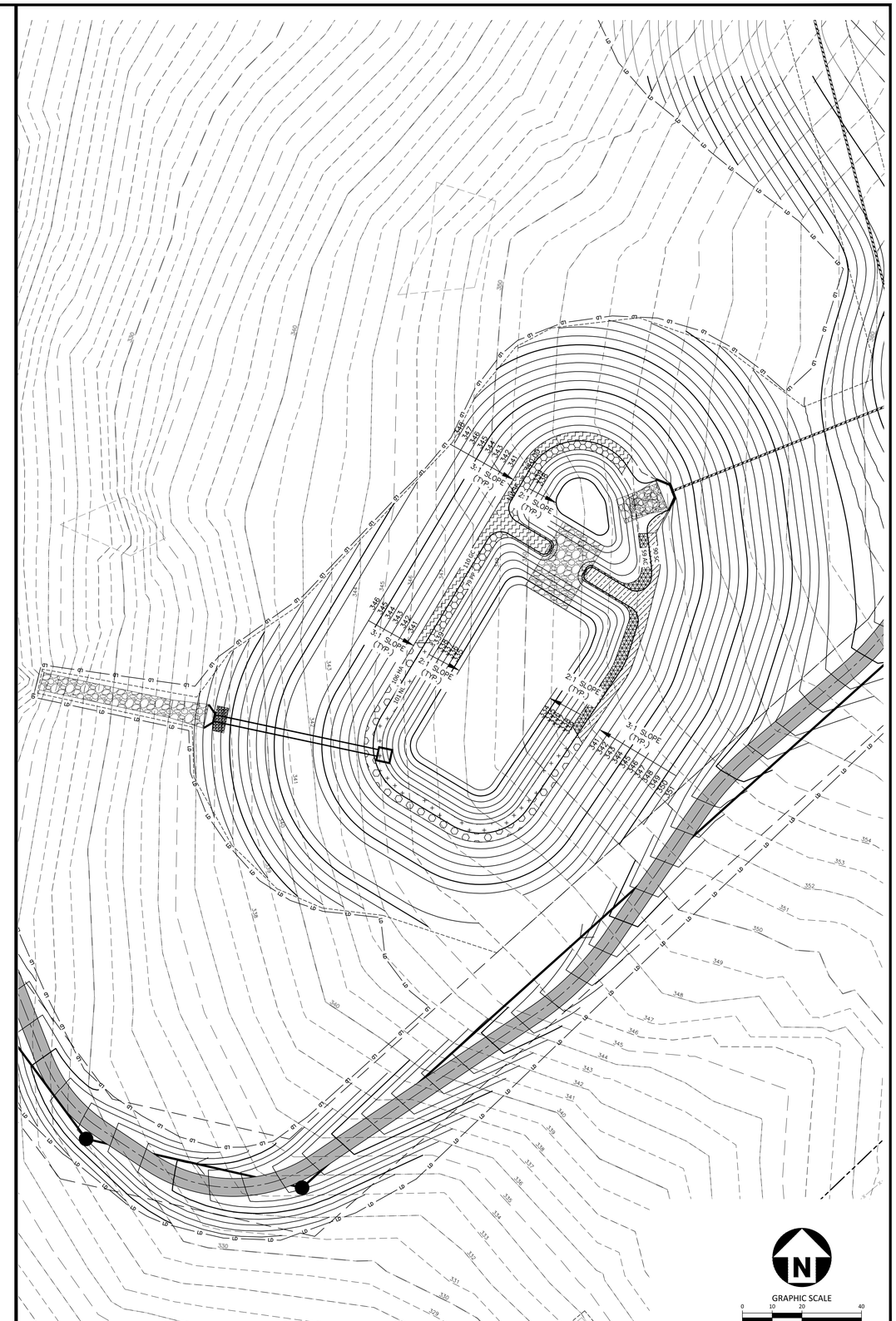

STORMWATER CONTROL MEASURE 'N' PLAN VIEW
1" = 20'

FINAL DRAWING - NOT RELEASED FOR CONSTRUCTION

McADAMS
The John R. McAdams Company, Inc.
2905 Meridian Parkway
Durham, NC 27713

phone 919. 361. 5000
fax 919. 361. 2269
license number: C-0293, C-187

www.mcadamsco.com

CLIENT
ASHTON WOODS
5711 SIX FORKS ROAD, SUITE 300
RALEIGH, NORTH CAROLINA 27609

ASHTON WOODS

THE POINT PHASES 11-13
CONSTRUCTION DRAWINGS
EAST YOUNG STREET
TOWN OF ROLESVILLE, WAKE FOREST TOWNSHIP,
WAKE COUNTY, NORTH CAROLINA

CD XX-XX

NORTH CAROLINA PROFESSIONAL SEAL 47257 ENGINEER KATHERINE E. GARCIA
NOT FOR CONSTRUCTION

REVISIONS
NO. DATE

PLAN INFORMATION

PROJECT NO.	AWH-20000
FILENAME	AWH20000 - SCM M
CHECKED BY	KEG
DRAWN BY	ABT
SCALE	1" = 20'
DATE	10.26.2022

SHEET
STORMWATER CONTROL MEASURE 'M' LANDSCAPE PLAN
C9.03

M:\Projects\AWH\AWH-20000\04-Production\Water Resources\North Site\Current Drawings\AWH20000 - SCM M.dwg, 10/27/2022 9:15:26 AM, Alex Thierer

STORMWATER CONTROL MEASURE 'N' CONSTRUCTION SPECIFICATIONS

GENERAL NOTES

1. PRIOR TO CONSTRUCTION, ANY DISCREPANCIES IN THE PLANS AND NOTES SHALL BE BROUGHT TO THE DESIGN ENGINEER'S ATTENTION IMMEDIATELY.

2. THE PROJECT WILL MEET ALL OF THE REQUIREMENTS RELATIVE TO BEST MANAGEMENT PRACTICES AND ENGINEERED STORMWATER CONTROL STRUCTURES AS OUTLINED IN THE TOWN OF ROLESVILLE LAND DEVELOPMENT ORDINANCE.

3. THE FINAL CERTIFICATION FOR THIS FACILITY WILL INCLUDE A CERTIFICATION BY THE ON-SITE GEOTECHNICAL ENGINEER THAT THE PROJECT WAS CONSTRUCTED PER THE APPROVED PLANS. IT IS THE RESPONSIBILITY OF THE CONTRACTOR TO COORDINATE WITH THE ON-SITE GEOTECHNICAL ENGINEER FOR OBSERVATION AND TESTING SUCH THAT THE ON-SITE GEOTECHNICAL ENGINEER CAN CERTIFY THE CONSTRUCTION OF THE DAM EMBANKMENT AND SPILLWAY. THIS CERTIFICATION MUST ADDRESS THE TESTING FOR MATERIALS AND COMPACTION OF THE DAM EMBANKMENT AND SPILLWAY.

4. ALL CONSTRUCTION ACTIVITY RELATED TO THE PROPOSED STORMWATER CONTROL MEASURE SHALL BE PER THE DETAILS AND SPECIFICATIONS SHOWN IN THESE DRAWINGS. SOILS, COMPACTION, AND OTHER MISCELLANEOUS DETAILS AND SPECIFICATIONS MAY BE MODIFIED PER THE RECOMMENDATIONS OF THE ON-SITE GEOTECHNICAL ENGINEER. HOWEVER, PRIOR TO IMPLEMENTATION, THE DESIGN ENGINEER SHALL BE NOTIFIED OF ANY DEVIATION FROM THESE DESIGN DRAWINGS, INCLUDING SHOP DRAWINGS FOR ANY PROPOSED MODIFICATION.

5. DURING THE INITIAL STAGES OF CONSTRUCTION, THE STORMWATER CONTROL MEASURE MAY BE USED AS A SEDIMENT BASIN FOR EROSION CONTROL PURPOSES. IF SO, THE CONTRACTOR SHALL FOLLOW THE GENERAL CONSTRUCTION SEQUENCE BELOW:
   A. THE CONTRACTOR SHALL CONSTRUCT THE ENTIRE FACILITY (PERMANENT OUTLET STRUCTURE, DAM, ETC.) WITH THE EXCEPTION OF THE INTERIOR FINE GRADING FOR THE FACILITY. THE INTERIOR FINE GRADING WILL BE CONSTRUCTED ONCE THE EROSION CONTROL PHASE IS COMPLETE.
   B. THE TEMPORARY DRAW DOWN RISER (OR SKIMMER) SHALL BE CONNECTED TO THE PERMANENT 6"Ø DIP DRAIN PIPE.
   C. ONCE THE UPSTREAM DRAINAGE AREA IS STABILIZED AND THE EROSION CONTROL INSPECTOR APPROVES THE REMOVAL OF THE SEDIMENT BASIN, THE CONTRACTOR SHALL REMOVE THE TEMPORARY DRAW DOWN RISER (OR SKIMMER) AND CLEAN OUT THE BASIN. ALL SEDIMENT, TRASH, ETC. SHALL BE DISPOSED OF PROPERLY (I.E. - PLACED IN A LANDFILL) AND NOT STOCKPILED IN AN AREA WHERE WATER QUALITY COULD BE ADVERSELY AFFECTED.
   D. ONCE THE BASIN IS CLEANED OUT, AND ALL EROSION CONTROL DEVICES REMOVED, THE CONTRACTOR SHALL CONSTRUCT THE INTERIOR GRADING SHOWN ON THIS SHEET.
   E. ONCE THE GRADING IS COMPLETE, THE CONTRACTOR SHALL REQUEST AN ON-SITE INSPECTION AND AN AS-BUILT SURVEY PRIOR TO INSTALLATION OF THE STORMWATER CONTROL MEASURE PLANTS. IF THE CONTRACTOR PLANTS THE PROPOSED VEGETATION PRIOR TO AN AS-BUILT SURVEY (AND SUBSEQUENT APPROVAL), ANY CHANGES TO THE GRADING / RE-PLANTING OF PLANTS WILL BE AT THE CONTRACTOR'S EXPENSE.
   F. ONCE THE ENGINEER HAS APPROVED THE AS-BUILT GRADING, THE CONTRACTOR SHALL PLANT THE PROPOSED STORMWATER CONTROL MEASURE PLANTS SHOWN ON THE LANDSCAPE PLAN FOR THE FACILITY. AFTER COMPLETION OF THE PLANTING, THE LANDSCAPE CONTRACTOR SHALL PROVIDE A LETTER TO THE ENGINEER CERTIFYING THAT THE PLANTS HAVE BEEN INSTALLED PER THE APPROVED STORMWATER CONTROL MEASURE PLANTING PLAN.
6. ALL OSHA REQUIREMENTS FOR EXCAVATIONS (SHORING, DEPTH, ETC.) ARE THE RESPONSIBILITY OF THE CONTRACTOR. IF REQUIRED, THE CONTRACTOR SHALL PROVIDE AN EXCAVATION PLAN TO BE SEALED BY A NC P.E. IT IS THE RESPONSIBILITY OF THE CONTRACTOR TO DETERMINE IF AN EXCAVATION PLAN IS REQUIRED. THE JOHN R. MCADAMS COMPANY ASSUMES NO RESPONSIBILITY FOR ANY EXCAVATION DESIGN RELATED TO SAFETY OR OSHA REQUIREMENTS.

7. ON-SITE GEOTECHNICAL ENGINEER TO DETERMINE IF IN-SITU SOILS ENCOUNTERED WOULD MAINTAIN A STORMWATER CONTROL MEASURE PERMANENT POOL AT DESIGN ELEVATION. IF HIGHLY PERMEABLE SOILS ARE ENCOUNTERED THAT WOULD NOT MAINTAIN THE PERMANENT POOL ELEVATION AS DESIGNED, A CLAY LINER MAY BE REQUIRED TO MAINTAIN A PERMANENT POOL OF WATER IN THE STORMWATER CONTROL MEASURE. FINAL DETERMINATION IF A CLAY LINER IS NEEDED SHALL BE THE RESPONSIBILITY OF THE ON-SITE GEOTECHNICAL ENGINEER. UPON DETERMINATION OF HIGHLY PERMEABLE SOIL CONDITIONS, ON-SITE GEOTECHNICAL ENGINEER WILL INFORM THE DESIGN ENGINEER AND RECOMMEND LINER SPECIFICATIONS.

8. IT IS ANTICIPATED THAT DEWATERING WILL BE NECESSARY IN THE EXCAVATION AREAS (E.G. - EMBANKMENT SUB GRADE, INTERIOR PORTIONS OF THE STORMWATER CONTROL MEASURE, KEY TRENCH, ETC.). THEREFORE, THE CONTRACTOR SHALL FURNISH, INSTALL, OPERATE, AND MAINTAIN ANY PUMPING EQUIPMENT, ETC. NEEDED FOR REMOVAL OF WATER FROM VARIOUS PARTS OF THE STORMWATER CONTROL MEASURE SITE. DURING PLACEMENT OF FILL WITHIN THESE AREAS, THE CONTRACTOR SHALL KEEP THE WATER LEVEL BELOW THE BOTTOM OF THE EXCAVATION / CONSTRUCTION AREAS. THE MANNER IN WHICH THE WATER IS REMOVED SHALL BE SUCH THAT THE EXCAVATION BOTTOM AND SIDE SLOPES ARE STABLE, WITH NO SEDIMENT DISCHARGED FROM THE SITE (I.E. PUMPED WATER MAY NEED TO BE DIRECTED TO AN APPROVED EROSION CONTROL DEVICE SUCH AS A DIRT BAG (ACF ENVIRONMENTAL), OR ENGINEER APPROVED EQUIVALENT, PRIOR TO DISCHARGE).

9. THE RETAINING WALL ALIGNMENT SHOWN ON THESE PLANS DEPICTS THE LOCATION OF THE FRONT FACE OF THE RETAINING WALL AT THE BOTTOM.

10. THE RETAINING WALL IS TO BE A DESIGN-BUILD PROJECT(S) BY THE CONTRACTOR. IT SHALL BE THE CONTRACTOR'S RESPONSIBILITY TO OBTAIN FINAL CONSTRUCTION DRAWINGS FROM A REGISTERED PROFESSIONAL ENGINEER AND GAIN ALL REQUIRED PERMITS NECESSARY FOR THE CONSTRUCTION OF THE RETAINING WALL.

11. THE RETAINING WALL SHALL BE ASSUMED TO BE BACKFILLED WITH OFF-SITE BORROW MATERIAL OR PROCESSED FILL UNLESS CONTRACTOR CAN PROVIDE OWNER WITH CONFIRMATION FROM THE GEOTECHNICAL ENGINEER AND THE RETAINING WALL DESIGNER THAT READILY AVAILABLE ON-SITE SOILS CAN BE USED.

12. THE TOP AND BOTTOM OF WALL ELEVATIONS SHOWN ON THESE PLANS IDENTIFY FINISHED GRADE ELEVATIONS ONLY. THE EXTENT THAT THE RETAINING WALL WILL BE EXTENDED BELOW GRADE TO THE FOOTING SHALL BE IDENTIFIED ON THE RETAINING WALL CONSTRUCTION DRAWINGS.

13. THE ON-SITE GEOTECHNICAL ENGINEER SHOULD BE GIVEN AN OPPORTUNITY TO REVIEW ALL RETAINING WALL PLANS AND DESIGNS RELEVANT TO GEOTECHNICAL CONSIDERATIONS PRIOR TO FINAL DESIGN OF THE WALLS.

14. THE GRADES SHOWN ON THIS PLAN ARE FINISHED GRADES. IF THE EXISTING SOIL LAYER AFTER CONSTRUCTION / COMPACTION IS NOT DETERMINED SUITABLE BY A LANDSCAPE PROFESSIONAL FOR THE WETLAND PLANTINGS, THEN THE CONTRACTOR SHALL AMEND THE PLANTING AREA OF THE WETLAND AS DIRECTED BY A LANDSCAPE PROFESSIONAL.

15. PRIOR TO TOPSOIL INSTALLATION, THE CONTRACTOR SHALL SCARIFY THE TOP 2"-3" OF THE BERM SECTION TO PROMOTE BONDING OF THE TOPSOIL WITH THE COMPACTED FILL. THE TOPSOIL DEPTH SHALL RANGE FROM 3"-4" ON THE DAM EMBANKMENT AND WETLAND. PLEASE NOTE THE TOPSOIL SHALL BE AMENDED, AS DIRECTED BY A LANDSCAPE PROFESSIONAL, PRIOR TO INSTALLATION ON THE EMBANKMENT AND WETLAND.

16. THE CONTRACTOR SHALL REFER TO THE LANDSCAPE PLAN FOR THE PERMANENT PLANTING PLAN/SCHEDULE FOR THIS FACILITY. CONTRACTOR SHALL COORDINATE WITH A LANDSCAPE PROFESSIONAL REGARDING SCHEDULING FOR PLANT INSTALLATION. PLEASE NOTE THAT NO TREES/SHRUBS OF ANY TYPE MAY BE PLANTED ON THE PROPOSED DAM EMBANKMENT (FILL AREAS).

OUTLET STRUCTURE MATERIAL SPECIFICATIONS

1. THE 24"Ø RCP OUTLET BARREL SHALL BE CLASS III RCP, MODIFIED BELL AND SPIGOT, MEETING THE REQUIREMENTS OF ASTM C76-LATEST. THE PIPES SHALL HAVE CONFINED O-RING RUBBER GASKET JOINTS MEETING ASTM C-443-LATEST. THE PIPE JOINTS SHALL BE TYPE R-4.

2. THE STRUCTURAL DESIGN FOR THE 4' X 4' (INTERNAL DIMENSIONS) RISER BOX WITH EXTENDED BASE SHALL BE BY OTHERS. PRIOR TO ORDERING THE STRUCTURES, THE CONTRACTOR SHALL PROVIDE, TO THE DESIGN ENGINEER FOR REVIEW, SHOP DRAWINGS AND SUPPORTING STRUCTURAL CALCULATIONS SEALED BY A P.E. REGISTERED IN NORTH CAROLINA DEMONSTRATING THE PERTINENT VERTICAL LOADS ARE SUPPORTED BY THE CONCRETE RISER STRUCTURE.

3. THE RISER BOX OUTLET STRUCTURE SHALL BE PROVIDED WITH STEPS 16" ON CENTER. STEPS SHALL BE PROVIDED ON THE INNER WALL OF THE RISER BOX. STEPS SHALL BE IN ACCORDANCE WITH NCDOT STD. 840.66. PLEASE REFER TO SHEET C9.05 FOR LOCATION OF THE RISER STEPS. NOTE THE STEPS SHALL LINE UP WITH THE ACCESS HATCH OF THE TRASH RACK.

4. THE CONCRETE ANTI-FLOTATION BLOCK SHALL BE CAST-IN-PLACE. STEEL REINFORCEMENT AND CONNECTION TO THE RISER SHALL BE PROVIDED IN ACCORDANCE WITH THE DETAIL ON SHEET C9.06. THE CONTRACTOR SHALL ENSURE THE WEIGHT OF THE ENTIRE RISER STRUCTURE IS GREATER THAN OR EQUAL TO 23,882 LBS. IN LIEU OF CAST-IN-PLACE, THE CONTRACTOR MAY OPT FOR A PRECAST ANTI-FLOTATION BLOCK. SHOP DRAWINGS FOR THE PRECAST BLOCK SHALL BE SUBMITTED TO THE ENGINEER FOR REVIEW. THE PRECAST ANTI-FLOTATION BLOCK SHALL HAVE A SHIPPING WEIGHT OF 13,632 LBS.

5. THE RISER BOX JOINTS SHALL BE SEALED USING BUTYL RUBBER SEALANT CONFORMING TO ASTM-C990-LATEST. IF NECESSARY, THE CONTRACTOR SHALL INCORPORATE A WATERSTOP INTO THE RISER BOX JOINT TO ENSURE A WATERTIGHT CONNECTION. THE CONTRACTOR SHALL PARGE JOINTS ON BOTH THE INSIDE AND OUTSIDE WITH NON-SHRINK GROUT AND INSTALL GALVANIZED STEEL STRAPS PER DETAIL ON SHEET C9.05.

6. PRIOR TO ORDERING, THE CONTRACTOR SHALL SUBMIT TRASH RACK SHOP DRAWINGS TO THE ENGINEER FOR REVIEW. CONTRACTOR SHALL ENSURE THAT AN ACCESS HATCH IS PROVIDED WITHIN THE TRASH RACK (SEE DETAIL FOR LOCATION) THAT WILL ALLOW FOR FUTURE MAINTENANCE ACCESS. CONTRACTOR SHALL ALSO PROVIDE A CHAIN AND LOCK FOR SECURING THE ACCESS HATCH. NOTE THE ACCESS HATCH SHALL LINE UP WITH THE ACCESS STEPS AFTER INSTALLATION.

7. ALL POURED CONCRETE SHALL MEET THE FOLLOWING SPECIFICATIONS UNLESS OTHERWISE NOTED:

   -MINIMUM 3000 PSI (28 DAY)
   -SLUMP = 3" - 5"
   -ENTRAINED AIR = 5% - 7%

   PLEASE NOTE NO CONCRETE SHALL BE POURED WHEN THE AMBIENT AIR TEMPERATURES ARE EXPECTED TO BE ABOVE 85°F OR BELOW 40°F. CAST-IN-PLACE CONCRETE SHALL BE "WET CURED" AFTER FINISHING FOR A MINIMUM OF 48 HOURS.

   ON-SITE GEOTECHNICAL ENGINEER TO ENSURE AND CERTIFY ALL POURED CONCRETE MEETS THE ABOVE SPECIFICATIONS.

8. GEOTEXTILE FABRIC FOR THE 24"Ø RCP OUTLET BARREL JOINTS SHALL BE MIRAFI 180N OR ENGINEER APPROVED EQUAL (NON-WOVEN FABRIC).

9. STORMWATER CONTROL MEASURE EMERGENCY DRAW DOWN IS VIA AN 6"Ø PLUG VALVE. THE VALVE SHALL BE A M&H STYLE 1820 ECCENTRIC VALVE OR APPROVED EQUAL. THIS VALVE IS IN ACCORDANCE WITH AWWA C-517, AND SHALL BE OPERABLE FROM TOP OF OUTLET STRUCTURE VIA A HAND WHEEL (SEE DETAIL SHEET C9.05). THE CONTRACTOR SHALL PROVIDE A REMOVABLE VALVE WRENCH WITH A HAND WHEEL ON TOP FOR OPERATION OF THE 6"Ø PLUG VALVE.

CONSTRUCTION SEQUENCE

1. PRIOR TO CONSTRUCTION, THE OWNER SHALL OBTAIN A LAND DISTURBING (GRADING) PERMIT AND AN "APPROVAL TO CONSTRUCT" FROM THE TOWN OF ROLESVILLE AND ALL OTHER NECESSARY PERMITS FROM APPLICABLE AGENCIES (E.G. 404 / 401 PERMITS)

2. INSTALL ALL SEDIMENT AND EROSION CONTROL MEASURES PER THE APPROVED SEDIMENT AND EROSION CONTROL PLAN. THE CONTRACTOR SHALL MAINTAIN ALL APPROVED SEDIMENT AND EROSION CONTROL MEASURES THROUGHOUT THE ENTIRE PROJECT, AS REQUIRED. THE CONTRACTOR SHALL RECEIVE APPROVAL FROM THE EROSION CONTROL INSPECTOR, AS REQUIRED BY GOVERNING AGENCIES, PRIOR TO ANY CLEARING.

3. CLEAR AND GRUB AREA WITHIN THE LIMITS OF THE PROPOSED DAM CONSTRUCTION. ALL TREES AND THEIR ENTIRE ROOT SYSTEMS MUST BE REMOVED FROM THE DAM FOOTPRINT AREA AND BACKFILLED WITH SUITABLE SOIL MATERIAL. THE BACKFILLED AREAS SHALL BE COMPACTED TO THE SAME STANDARDS AS THE DAM EMBANKMENT. THE REMAINING AREA OF THE EMBANKMENT SHALL BE STRIPPED TO A SUITABLE DEPTH AS DIRECTED BY THE ON-SITE GEOTECHNICAL ENGINEER. ANY RESIDUAL SOILS TO BE LEFT IN PLACE MUST BE WELL SCARIFIED TO PROMOTE BONDING OF THE NEW EMBANKMENT FILL. NO EMBANKMENT MATERIAL SHALL BE PLACED FOR THE DAM OR KEY TRENCH UNTIL APPROVAL OF THE DAM SUBGRADE IS OBTAINED FROM THE ON-SITE GEOTECHNICAL ENGINEER.

4. EXCAVATE FOR THE NEW KEY TRENCH ALONG THE CENTERLINE OF THE PROPOSED DAM EMBANKMENT. THE TRENCH SHALL EXTEND A MINIMUM OF 5 FT BELOW EXISTING GRADE OR 2 FT BELOW THE 24"Ø RCP OUTLET BARREL AND SHALL HAVE A MINIMUM BOTTOM WIDTH OF 5 FEET. THE KEY TRENCH SIDESLOPES SHALL BE A MINIMUM OF 1:1 (H:V). WHEN EXCAVATING THE KEY TRENCH, IF ANY DEBRIS IS ENCOUNTERED TO AN EXTENT THAT SUCH DEBRIS MAY EXIST IN OTHER INSITU PORTIONS OF THE DAM EMBANKMENT, IT SHOULD ALSO BE REMOVED. THE KEY TRENCH SHALL BE COMPACTED TO THE SAME SPECIFICATION LISTED IN ITEM 4 OF THE SECTION TITLED "BERM AND SOIL COMPACTION SPECIFICATIONS." DEPENDING UPON ON-SITE SOIL CONDITIONS ENCOUNTERED DURING EXCAVATION, THE ON-SITE GEOTECHNICAL ENGINEER MAY VARY THE DEPTH AND DIMENSIONS OF THE KEY TRENCH AS DEEMED NECESSARY. THE ON-SITE GEOTECHNICAL ENGINEER SHALL RETAIN DOCUMENTATION OF ANY VARIATION FOR FUTURE AS-BUILT SUBMITTALS TO THE TOWN OF ROLESVILLE.

5. BEGIN PLACEMENT OF BACKFILL WITHIN THE KEY TRENCH. THE KEY TRENCH SHALL BE COMPACTED TO THE SPECIFICATIONS LISTED ITEM 4 OF THE SECTION TITLED "BERM AND SOIL COMPACTION SPECIFICATIONS." THE KEY TRENCH SHALL BE TESTED PER THE SPECIFICATIONS LISTED IN THAT SECTION.

6. PRIOR TO INSTALLATION, SUBGRADE CONDITIONS ALONG THE SPILLWAY PIPES SHOULD BE EVALUATED BY THE ON-SITE GEOTECHNICAL ENGINEER TO ASSESS WHETHER SUITABLE BEARING CONDITIONS EXIST AT THE SUBGRADE LEVEL. SHOULD SOFT OR OTHERWISE UNSUITABLE CONDITIONS BE ENCOUNTERED ALONG THE PIPE ALIGNMENTS, THESE MATERIALS SHOULD BE UNDERCUT AS DIRECTED BY THE GEOTECHNICAL ENGINEER. THE UNDERCUT MATERIALS SHALL BE REPLACED WITH ADEQUATELY COMPACTED STRUCTURAL FILL, LEAN CONCRETE OR FLOWABLE FILL AS DIRECTED BY THE ON-SITE GEOTECHNICAL ENGINEER.

7. IN ORDER TO HELP PROTECT THE SOIL SUBGRADE FROM DETERIORATION (DUE TO EXPOSURE, RAINFALL, SEEPAGE, AND RUNOFF) BEFORE THE CRADLE CAN BE POURED, IT IS STRONGLY RECOMMENDED THAT A 3" TO 4" THICK CONCRETE MUD MAT BE POURED OVER THE SUBGRADE ONCE IT IS APPROVED BY THE ON-SITE GEOTECHNICAL ENGINEER. THE MUD MAT WILL ALSO PROVIDE BEARING FOR THE BLOCKS THAT TEMPORARILY SUPPORT THE SPILLWAY PIPE UNTIL THE CRADLE CAN BE POURED. THE METHOD OF BLOCK SUPPORT FOR THE PIPE PROPOSED BY THE CONTRACTOR SHOULD BE SUBMITTED TO THE JOHN R. McADAMS COMPANY FOR REVIEW.

8. BEGIN CONSTRUCTION OF THE NEW EMBANKMENT. FILL MATERIALS SHALL BE PLACED IN MAXIMUM 8" THICK LIFTS PRIOR TO COMPACTION, UNLESS DIRECTED OTHERWISE BY THE ON-SITE GEOTECHNICAL ENGINEER. FILL LIFTS SHALL BE CONTINUOUS OVER THE ENTIRE LENGTH OF FILL. IF IT IS NECESSARY, THE EMBANKMENT FILL MATERIAL WILL BE OVERBUILT IN HORIZONTAL LIFTS AND CUT BACK TO FINAL GRADE IN ORDER TO ACHIEVE PROPER COMPACTION.

9. AS CONSTRUCTION OF THE EMBANKMENT MOVES FORWARD, IT WILL BE NECESSARY TO INSTALL THE CONCRETE CRADLE. SEE NOTE ON CRADLE DETAIL (SHEET C9.06). THIS MAY BE CONSTRUCTED USING ONE OF THE FOLLOWING METHODS:

   A. IF THE PROPOSED STRUCTURAL FILL MATERIAL IS UTILIZED AS THE FORMWORK FOR THE CONCRETE CRADLE, THEN THE STRUCTURAL FILL SHOULD BE INSTALLED AND COMPACTED UP TO THE TOP OF CONCRETE CRADLE ELEVATION. ONCE THE STRUCTURAL FILL REACHES THE NEXT DOWNSTREAM JUNCTION BOX OR HEADWALL AND IS COMPACTED TO THE ELEVATION OF THE TOP OF THE CONCRETE CRADLE, EXCAVATE THE CONCRETE CRADLE TRENCH PER THE PROVIDED DETAILS AND CONSTRUCT THE CONCRETE CRADLE AS PER THE PROVIDED CONCRETE CRADLE DETAIL.

   B. IF THE PROPOSED STRUCTURAL FILL IS NOT UTILIZED AS THE FORMWORK FOR THE CONCRETE CRADLE, THEN PRIOR TO CONSTRUCTING THE STRUCTURAL FILL EMBANKMENT, THE FORMWORK FOR THE CONCRETE CRADLE SHOULD BE INSTALLED ON EXISTING GROUND AND/OR THE MUD MAT. THE CONCRETE CRADLE SHALL BE CONSTRUCTED PER THE PROVIDED DETAILS

10. INSTALL RISER / BARREL ASSEMBLY, ALONG WITH THE EMERGENCY DRAIN SYSTEM. INSTALL 24" RCP OUTLET BARREL SPILLWAY FILTER FROM THE DETAILS SHOWN ON SHEET C9.06.

11. CONSTRUCT EMBANKMENT PER SPECIFICATIONS LISTED IN THE SECTION TITLED "BERM AND SOIL COMPACTION SPECIFICATIONS" AND REQUIREMENTS OF THE ON-SITE GEOTECHNICAL ENGINEER. ALL CHARACTERISTICS OF THE EMBANKMENT FILL MATERIAL SHALL MEET THE STANDARDS SET FORTH IN "BERM AND SOIL COMPACTION SPECIFICATIONS", INCLUDING COMPACTION AND MOISTURE REQUIREMENTS. IF NECESSARY TO ACHIEVE PROPER COMPACTION, THE EMBANKMENT FILL MATERIAL WILL BE OVERBUILT IN HORIZONTAL LIFTS AND CUT BACK TO PROPER FINAL GRADE. ANY HAND COMPACTION ACTIVITIES AROUND SPILLWAY OR DRAIN STRUCTURES SHALL BE CONDUCTED IN 4-INCH LOOSE LIFTS AND BE TO THE SAME COMPACTION AND MOISTURE REQUIREMENTS AS THE ENTIRE EMBANKMENT. ALL COMPACTION AND MOISTURE TESTING SHALL BE CARRIED OUT AS DIRECTED BY THE ON-SITE GEOTECHNICAL ENGINEER AND AS LISTED IN THE SECTION TITLED "BERM AND SOIL COMPACTION SPECIFICATIONS".

12. UPON COMPLETION OF DAM EMBANKMENT, PROMPTLY STABILIZE AND SEED DAM EMBANKMENT PER SEEDING SCHEDULE. PERMANENT GROUND COVER SHALL BE ESTABLISHED PER THE PERMANENT SEEDING SCHEDULE FOUND ON SHEET C9.07.

13. SCHEDULE A FINAL AS-BUILT INSPECTION AND AS-BUILT SURVEY WITH THE ENGINEER AND SURVEYOR. AN AS-BUILT INSPECTION AND SURVEY SHALL BE SCHEDULED BEFORE IMPOUNDING WATER IN THE FACILITY AND A MINIMUM OF 60 DAYS PRIOR TO THE ANTICIPATED DATE OF CERTIFICATION APPROVAL. ANY COMMENTS OR DEFICIENCIES IN THE SCM CONSTRUCTION MUST BE CORRECTED TO THE SATISFACTION OF THE ENGINEER AND OWNER BEFORE CERTIFICATION SHALL BE GRANTED.

BERM AND SOIL COMPACTION SPECIFICATIONS

1. PRIOR TO CONSTRUCTION, THE ON-SITE GEOTECHNICAL ENGINEER SHALL IDENTIFY BORROW / FILL AREAS AND VERIFY THEIR SUITABILITY FOR USE WITHIN THE DAM EMBANKMENT. ALSO, THE ON-SITE GEOTECHNICAL ENGINEER SHALL PERFORM STANDARD PROCTORS ON THE PROPOSED BORROW MATERIAL TO ENSURE THAT OPTIMUM MOISTURE CONTENT AND COMPACTION CAN BE ACHIEVED / CONTROLLED DURING CONSTRUCTION.

2. ALL FILL MATERIALS TO BE USED FOR THE DAM EMBANKMENT SHALL BE TAKEN FROM BORROW AREAS APPROVED BY THE ON-SITE GEOTECHNICAL ENGINEER. THE FILL MATERIAL SHALL BE FREE FROM ROOTS, STUMPS, WOOD, STONES GREATER THAN 6", AND FROZEN OR OTHER OBJECTIONABLE MATERIAL. THE FOLLOWING SOIL TYPES ARE SUITABLE FOR USE AS FILL WITHIN THE DAM EMBANKMENT AND KEY TRENCH: ML AND CL. ALL FILL MATERIALS SHALL BE APPROVED BY THE ONSITE GEOTECHNICAL ENGINEER FOR THE INTENDED USE.

3. FILL PLACEMENT FOR THE EMBANKMENT SHALL NOT EXCEED A MAXIMUM 8" LIFT (UNCOMPACTED). EACH LIFT SHALL BE CONTINUOUS FOR THE ENTIRE LENGTH OF EMBANKMENT. BEFORE PLACEMENT OF FILL FOR THE BERM SECTION, ALL UNSUITABLE MATERIAL SHALL BE REMOVED AND THE SURFACE PROPERLY PREPARED FOR FILL PLACEMENT. FILL MATERIAL ADJACENT TO ALL SPILLWAY AND DRAINAGE STRUCTURES SHALL BE PLACED IN 4-INCH (UNCOMPACTED) LIFTS AND HAND-COMPACTED TO THE SAME COMPACTION AND MOISTURE REQUIREMENTS AS THE ENTIRE EMBANKMENT.

4. ALL FILL SOILS USED IN THE EMBANKMENT CONSTRUCTION SHALL BE COMPACTED TO AT LEAST 95% OF THE STANDARD PROCTOR MAXIMUM DRY DENSITY (ASTM D-698). THE FILL SOILS SHALL BE COMPACTED AT A MOISTURE CONTENT WITHIN -1 TO +3 PERCENT OF ITS OPTIMUM MOISTURE CONTENT. COMPACTION TESTS SHALL BE PERFORMED BY THE ON-SITE GEOTECHNICAL ENGINEER DURING CONSTRUCTION TO VERIFY THAT THE PROPER COMPACTION LEVEL HAS BEEN REACHED. THE FILL SHOULD BE COMPACTED USING A SHEEPSFOOT TYPE COMPACTOR. IN ORDER TO PREVENT DAMAGE TO THE PIPE, NO COMPACTION EQUIPMENT SHALL CROSS ANY PIPE UNTIL MINIMUM COVER IS ESTABLISHED ALONG THE PIPE.

5. THE DESIGN ENGINEER SHALL BE PROVIDED WITH REPORTS AND CERTIFICATION, BY THE ON-SITE GEOTECHNICAL ENGINEER, THAT THE GEOTECHNICAL ASPECTS OF THE FACILITY HAVE BEEN CONSTRUCTED PER PLAN. THIS CERTIFICATION MUST ADDRESS THE TESTING FOR MATERIALS AND COMPACTION OF THE DAM EMBANKMENT AND SPILLWAY. THESE REPORTS AND CERTIFICATION WILL BE NEEDED DURING THE AS-BUILT CERTIFICATION PROCESS FOR THIS STORMWATER CONTROL MEASURE. THEREFORE, IT SHALL BE THE CONTRACTOR'S RESPONSIBILITY TO COORDINATE TESTING AND OBSERVATION WITH THE ON-SITE GEOTECHNICAL ENGINEER.

6. TESTING OF THE NEW FILL MATERIALS SHALL BE PERFORMED TO VERIFY THAT THE RECOMMENDED LEVEL OF COMPACTION IS ACHIEVED DURING CONSTRUCTION. THEREFORE, ONE DENSITY TEST SHALL BE PERFORMED FOR EVERY 2,500 SQUARE FEET OF AREA FOR EVERY LIFT OF FILL OR AS RECOMMENDED BY THE ON-SITE GEOTECHNICAL ENGINEER.

7. TESTING WILL BE REQUIRED ALONG THE 24"Ø RCP OUTLET BARREL AT A FREQUENCY OF ONE TEST PER 25 LF OF PIPE PER VERTICAL FOOT OF FILL OR AS DIRECTED BY THE ON-SITE GEOTECHNICAL ENGINEER.

STATEMENT OF RESPONSIBILITY

1. ALL REQUIRED MAINTENANCE AND INSPECTIONS OF THE STORMWATER CONTROL MEASURE SHALL BE THE RESPONSIBILITY OF THE OWNER, PER THE EXECUTED OPERATION AND MAINTENANCE AGREEMENT FOR THIS FACILITY.

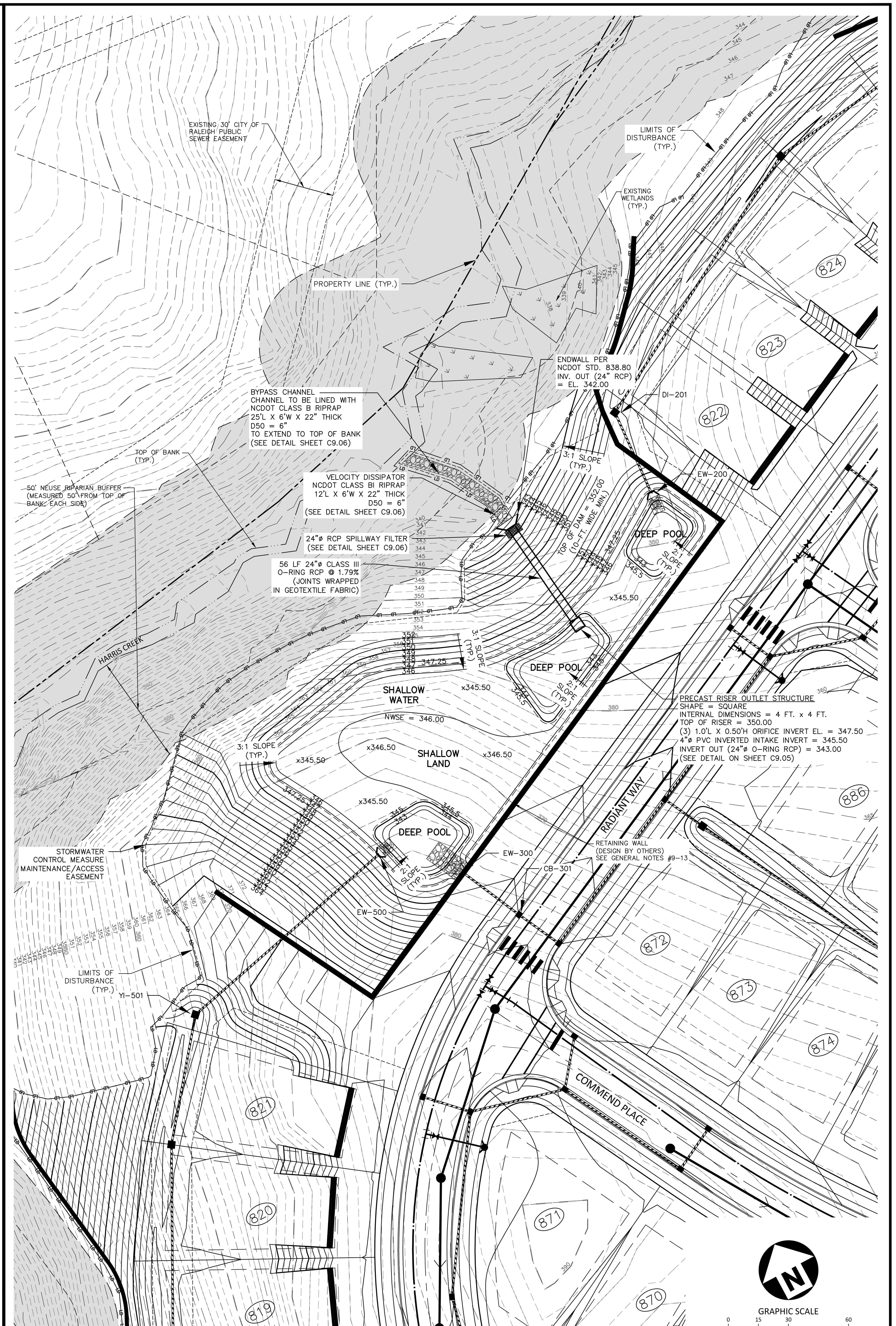

STORMWATER CONTROL MEASURE 'N' PLAN VIEW
1" = 30'

FINAL DRAWING - NOT RELEASED FOR CONSTRUCTION

McADAMS
The John R. McAdams Company, Inc.
2905 Meridian Parkway
Durham, NC 27713

phone 919. 361. 5000
fax 919. 361. 2269
license number: C-0293, C-187

www.mcadamsco.com

CLIENT

ASHTON WOODS
5711 SIX FORKS ROAD, SUITE 300
RALEIGH, NORTH CAROLINA 27609

ASHTON WOODS

THE POINT
PHASES 11-13
CONSTRUCTION DRAWINGS
EAST YOUNG STREET
TOWN OF ROLESVILLE, WAKE FOREST TOWNSHIP, WAKE COUNTY, NORTH CAROLINA

CD XX-XX

NORTH CAROLINA PROFESSIONAL SEAL 47257 ENGINEER KATHERINE E. GARCIA
PRELIMINARY NOT FOR CONSTRUCTION

REVISIONS

NO. DATE

PLAN INFORMATION

PROJECT NO.	AWH-20000
FILENAME	AWH20000 - SCM N
CHECKED BY	KEG
DRAWN BY	ABT/SD
SCALE	1" = 30'
DATE	10.26.2022

SHEET

STORMWATER CONTROL MEASURE 'N' PLAN VIEW

C9.04

M:\Projects\AWH\AWH-20000\04-Production\Water Resources\North Site\Current Drawings\AWH20000 - SCM N.dwg, 10/27/2022 9:16:04 AM, Alex Thierer

NOTE:

1. REMOVED TOPSOIL SHALL BE STOCKPILED FOR USE IN PLANTING (SEEDING) THE DAM EMBANKMENT ONCE FINAL GRADES (AS SHOWN ON THE GRADING PLAN) HAVE BEEN ESTABLISHED WITH COMPACTED FILL. PRIOR TO TOPSOIL INSTALLATION, THE CONTRACTOR SHALL SCARIFY THE TOP 2– TO 3–INCHES OF THE BERMN SECTION TO PROMOTE BONDING OF THE TOPSOIL WITH THE COMPACTED FILL. THE TOPSOIL DEPTH SHALL RANGE FROM 3– TO 4–INCHES ON THE DAM EMBANKMENT.

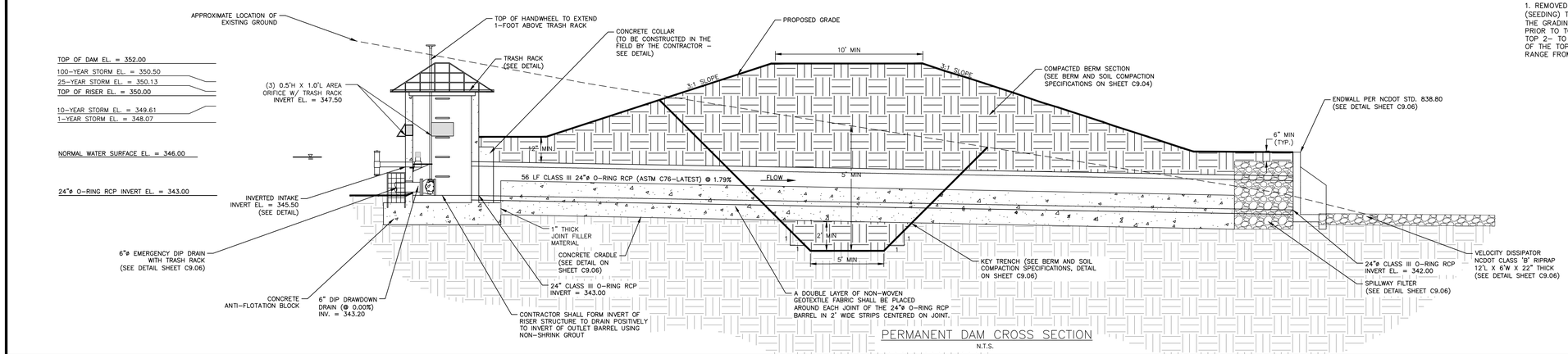

PERMANENT DAM CROSS SECTION

N.T.S.

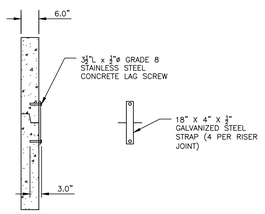

RISER JOINT CONNECTION DETAIL

N.T.S.

NOTES:

1. CONCRETE ANTI-FLOTATION BLOCK TO BE PROVIDED WITH MINIMUM TEMPERATURE AND SHRINKAGE STEEL REINFORCEMENT.

2. TRASH RACKS NOT SHOWN FOR CLARITY.

3. THE NUMBER OF GUIDES FOR THE VALVE STEM SHALL BE DETERMINED IN THE FIELD BY THE CONTRACTOR. THE VALVE STEM MUST BE OPERABLE FROM THE TOP OF THE RISER VIA THE HANDWHEEL WITH AN INSIGNIFICANT AMOUNT OF PLAY IN THE VALVE STEM.

4. CONTRACTOR SHALL PROVIDE A JOINT IN THE OUTLET BARREL NO MORE THAN 5-FT FROM THE RISER.

5. THE FIRST JOINT OF THE PIPE SHALL LINE UP WITH THE JOINT BETWEEN THE CONCRETE CRADLE AND ANTI-FLOAT BLOCK

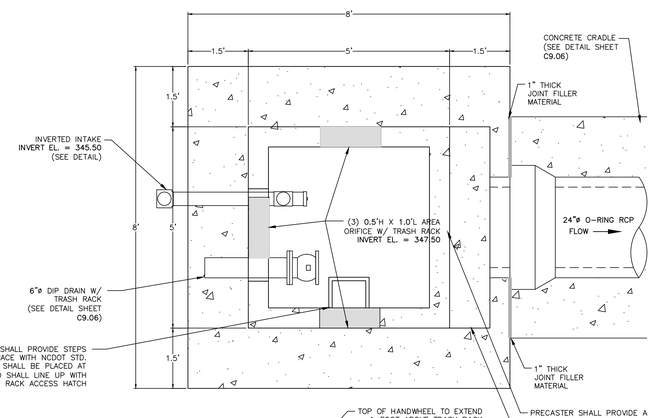

NOTES:
1. ALL REBAR TO BE #4 REBAR.
2. ALL REBAR AND ANGLES TO BE HOT–DIPPED GALVANIZED AND BE PROVIDED WITH AN EPOXY COATING.
3. THE HOT–DIPPED, GALVANIZED 2"x2"x1/4" ANGLES SHALL BE WELDED TO THE REBAR TRASH RACK. ONCE WELDED, THE ENTIRE ASSEMBLY SHALL BE PLACED ONTO THE RISER WITH ANGLES SITTING DIRECTLY ON TOP OF RISER.
4. TRASH RACK IS TO BE SECURELY FASTENED TO THE SPILLWAY RISER WITH A MINIMUM OF FOUR CORROSION–RESISTANT ANCHORS.
5. ACCESS HATCH SHALL ALIGN WITH STEPS IN RISER.

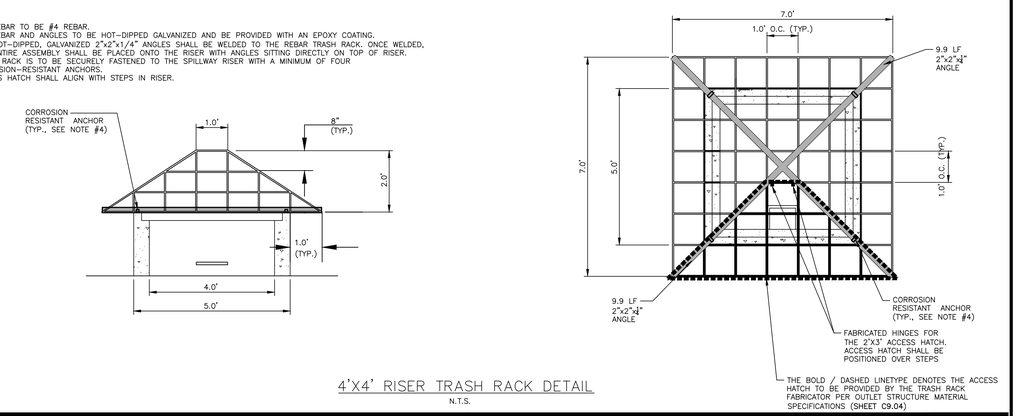

4'X4' RISER TRASH RACK DETAIL

N.T.S.

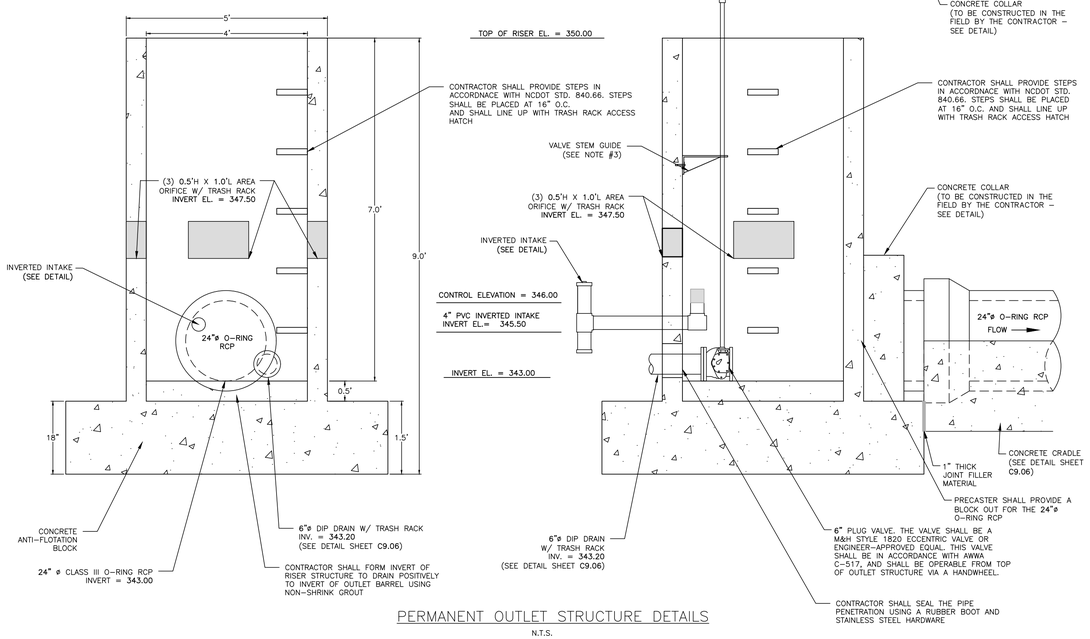

PERMANENT OUTLET STRUCTURE DETAILS

N.T.S.

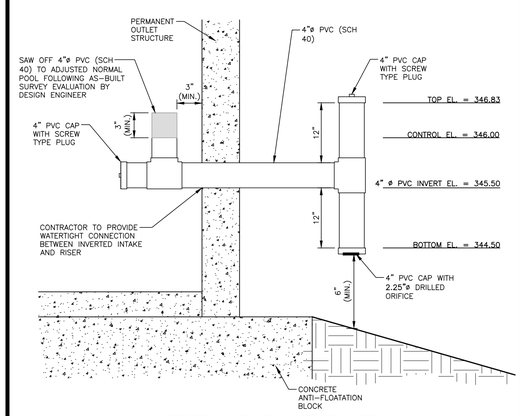

INVERTED INTAKE OUTLET DETAIL

N.T.S.

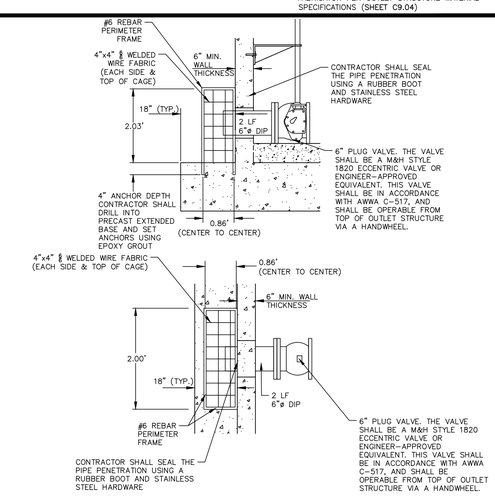

6"ø EMERGENCY DIP DRAIN TRASH RACK DETAILS

N.T.S.

FINAL DRAWING - NOT RELEASED FOR CONSTRUCTION

McADAMS

The John R. McAdams Company, Inc.
2905 Meridian Parkway
Durham, NC 27713

phone 919. 361. 5000
fax 919. 361. 2269
license number: C-0293, C-187

www.mcadamsco.com

CLIENT

ASHTON WOODS
5711 SIX FORKS ROAD, SUITE 300
RALEIGH, NORTH CAROLINA 27609

ASHTON WOODS

THE POINT PHASES 11-13

CONSTRUCTION DRAWINGS
EAST YOUNG STREET
TOWN OF ROLESVILLE, WAKE FOREST TOWNSHIP, WAKE COUNTY, NORTH CAROLINA

CD XX-XX

NORTH CAROLINA PROFESSIONAL SEAL 47257 ENGINEER KATHERINE E. GARCIA
NOT FOR CONSTRUCTION

REVISIONS

NO.	DATE

PLAN INFORMATION

PROJECT NO.	AWH-20000
FILENAME	AWH20000 - SCM N
CHECKED BY	KEG
DRAWN BY	ABT
SCALE	N.T.S.
DATE	10.27.2022

SHEET

STORMWATER CONTROL MEASURE 'N' DETAILS

C9.05

M:\Projects\AWH-20000\04-Production\Water Resources\North Site\Current Drawings\AWH20000 - SCM N.dwg, 10/27/2022 9:16:15 AM, Alex Thierer

NOTES:

1. A FILTER BLANKET IS TO BE INSTALLED BETWEEN THE RIPRAP AND SOIL FOUNDATION. THE FILTER BLANKET WILL CONSIST OF A MINIMUM 4" THICK LAYER OF STONE (NCDOT #57) UNDERLAIN WITH MIRAFI FILTER WEAVE 700 OR ENGINEER-APPROVED EQUIVALENT.

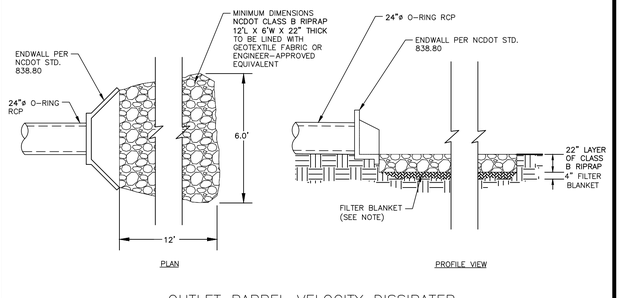

OUTLET BARREL VELOCITY DISSIPATER

N.T.S.

NOTES:

1. ALL REBAR TO BE #4 REBAR.
2. WRAP OUTSIDE OF PIPE WITH VOLCLAY WATERSTOP-RX® 101 (OR PRE-APPROVED EQUIVALENT) AT THE FACE OF THE PRECAST STRUCTURE WALL. PROVIDE 6" OVER LAP ON THE BOTTOM OF THE PIPE.

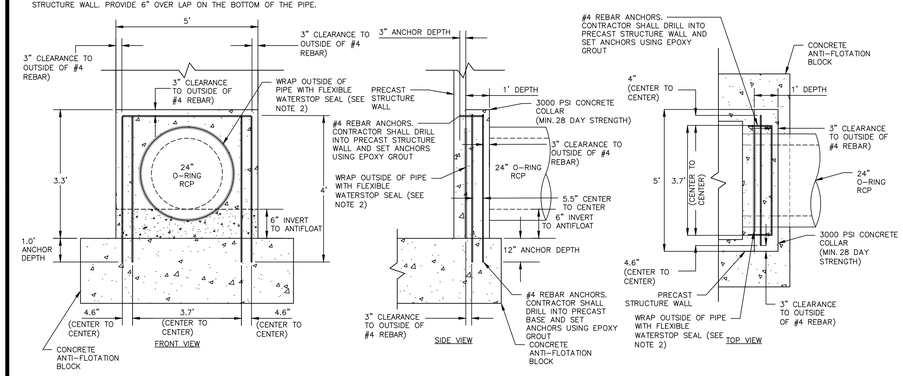

24"ø CONCRETE COLLAR DETAIL

N.T.S.

NOTES:
INSTALL ALL STEPS PROTRUDING 4" FROM INSIDE FACE OF STRUCTURE WALL.
STEPS DIFFERING IN DIMENSIONS, CONFIGURATION, OR MATERIALS FROM THOSE SHOWN MAY ALSO BE USED PROVIDED THE CONTRACTOR HAS FURNISHED THE ENGINEER WITH DETAILS OF THE PROPOSED STEPS AND HAS RECEIVED WRITTEN APPROVAL FROM THE ENGINEER FOR THE USE OF SUCH STEPS.

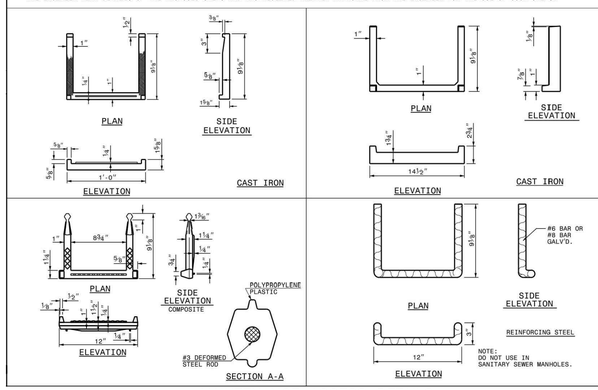

MAINTENANCE ACCESS DETAILS

N.T.S.

STATE OF NORTH CAROLINA DEPT. TRANSPORTATION DIVISION OF HIGHWAYS RALEIGH, N.C.

I-18

ROADWAY STANDARD DRAWING FOR **DRAINAGE STRUCTURE STEPS**

SHEET 1 OF 1

840.66

NOTE:

1. HAVILAND DRAINAGE PRODUCTS 4" ALUMINUM ANIMAL GUARD ITEM NUMBER ACSS04 (OR ENGINEER APPROVED EQUIVALENT) TO BE INSTALLED AT OUTLET OF 4" HDPE PIPES

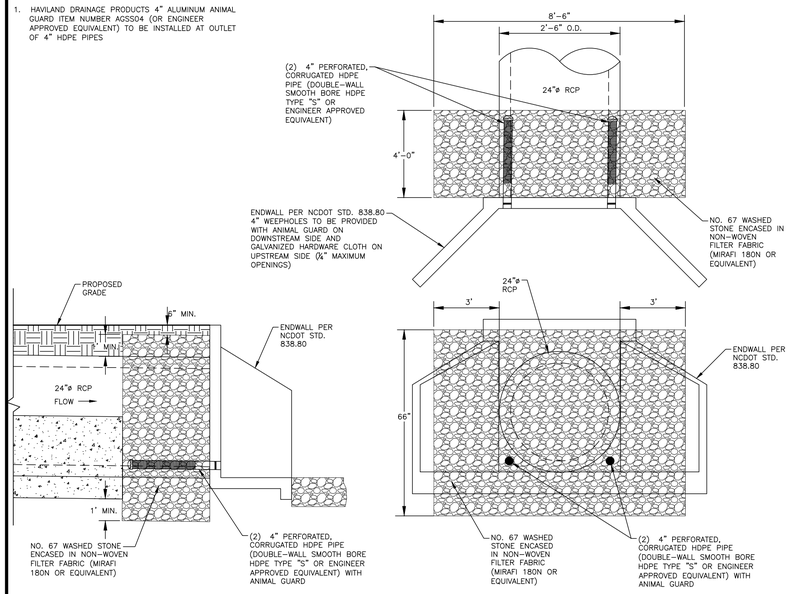

SPILLWAY FILTER DETAIL

N.T.S.

NOTES:

1. ATTACH TRASH RACK WITH (4) HOT DIPPED GALVANIZED STEEL CLAMPS. EACH CLAMP ATTACHED TO WEIR BOX BY (2) 4"x1/4" CONCRETE ANCHOR BOLTS. EACH CLAMP SHALL BE COATED WITH AN EPOXY COATING.
2. ALL REBAR TO BE GALVANIZED #4 REBAR WITH AN EPOXY COATING.
3. BARS TO EXTEND ON BOTTOM OF TRASH RACK.

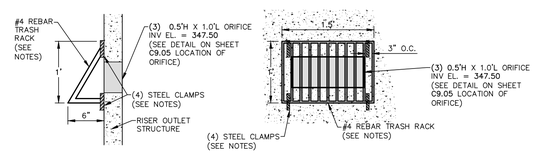

AREA ORIFICE TRASH RACK DETAIL

N.T.S.

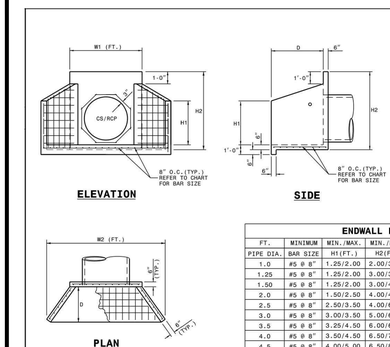

NOTES:

- THIS PRECAST ENDWALL MAY BE USED FOR THE FOLLOWING STANDARDS: 838.01, 838.11, 838.21, 838.27, 838.33, 838.39, 838.51, 838.57, 838.63 AND 838.69.
- INSTALL PRECAST ENDWALLS WITH WINGS AND PAY FOR IN ACCORDANCE WITH SPECIFICATION SECTION 838.
- USE 4000 PSI CONCRETE.
- PROVIDE ALL REINFORCING STEEL WHICH MEETS ASTM A615 FOR GRADE 60 AND WELDED WIRE FABRIC CONFORMING TO ASTM A185 WITH 2" MIN. CLEARANCE.
- PLACE LIFT HOLES OR PINS IN ACCORDANCE WITH OSHA STANDARD 1926.704.
- PIPE TO BE GROUTED INTO HEADWALL AT JOB SITE BY CONTRACTOR
- ALL ELEMENTS PRECAST TO MEET ASTM C913.
- WELDED WIRE FABRIC MAY BE SUBSTITUTED FOR REBAR AS LONG AS THE SAME AREA OF STEEL IS PROVIDED.
- CHAMFER ALL CORNERS 1" OR HAVE A RADIUS OF 1".

NOTE: THE MINIMUM BAR SIZE SHALL BE #5 BARS AT 6" CTS.THE CONTRACTOR WILL HAVE THE OPTION TO INCREASE THIS BAR SIZE AS NEEDED.

ENDWALL DIMENSIONS

FT.	MINIMUM	MIN./MAX.	MIN./MAX.	MIN./MAX.	MIN./MAX.	MIN./MAX.
PIPE DIA.	BAR SIZE	H1(FT.)	H2(FT.)	D (FT.)	W1	W2
1.0	#5 @ 8"	1.25/2.00	2.00/3.75	1.25/1.75	3.00/3.75	5.50/6.00
1.25	#5 @ 8"	1.25/2.00	3.00/3.75	1.25/2.00	3.50/3.75	6.50/6.75
1.50	#5 @ 8"	1.25/2.00	3.00/4.25	1.50/2.50	3.50/3.75	6.50/6.75
2.0	#5 @ 8"	1.50/2.50	4.00/4.75	1.75/2.50	4.00/4.25	7.50/8.25
2.5	#5 @ 8"	2.50/3.50	4.00/6.00	2.00/3.00	4.50/5.50	10.00/11.50
3.0	#5 @ 8"	3.00/3.50	5.00/6.00	2.75/3.50	5.25/5.75	11.50/11.75
3.5	#5 @ 8"	3.25/4.50	6.00/6.75	3.25/3.50	6.00/6.75	12.00/13.25
4.0	#5 @ 8"	3.50/4.50	6.50/7.00	3.25/3.50	6.50/6.75	13.00/13.25
4.5	#5 @ 8"	4.00/5.00	6.50/8.50	3.25/4.00	7.00/9.25	13.50/15.75
5.0	#5 @ 8"	4.50/5.00	7.00/8.50	3.25/4.00	7.25/9.25	13.75/15.75
5.5	#5 @ 8"	4.50/5.00	7.50/8.50	3.25/4.00	7.25/9.25	14.00/15.75
6.0	#5 @ 8"	4.50/5.00	7.50/8.50	3.25/4.00	7.75/9.25	14.75/16.75

ENDWALL DETAILS

N.T.S.

STATE OF NORTH CAROLINA DEPT. TRANSPORTATION DIVISION OF HIGHWAYS RALEIGH, N.C.

I-18

ROADWAY STANDARD DRAWING FOR **PRECAST CONCRETE ENDWALL** FOR SINGLE 12" THRU DOUBLE 12" THRU 72" PIPE - 90° SKEW

SHEET 1 OF 1

838.80

NOTE:

1. CONTRACTOR SHALL PROVIDE A JOINT IN THE OUTLET BARREL NO MORE THAN 5-FT FROM THE RISER.

BARREL PIPE CONCRETE CRADLE CONSTRUCTION SEQUENCE

1. IF OPTION A IS CHOSEN FROM NOTE 9 OF THE OUTLET STRUCTURE MATERIAL SPECIFICATIONS, THEN BRING GRADE OF DAM EMBANKMENT TO SPRINGLINE OF PIPE ELEVATION. IF OPTION B IS CHOSEN FROM NOTE 9 OF THE OUTLET STRUCTURE MATERIAL SPECIFICATIONS, THEN CONSTRUCT FORMWORK FOR CONCRETE CRADLE ON EXISTING GRADE.
2. IF OPTION A IS CHOSEN FROM NOTE 9 OF THE OUTLET STRUCTURE MATERIAL SPECIFICATIONS, THEN EXCAVATE TRENCH FOR CRADLE AND BARREL PER DIMENSIONS ON DRAWINGS. IF OPTION B IS CHOSEN FROM NOTE 9 OF THE OUTLET STRUCTURE MATERIAL SPECIFICATIONS, PROCEED TO STEP 3 BELOW.
3. PLACE BARREL PIPE ON CONCRETE BLOCKS TO GRADE. AT THIS STEP, CONTRACTOR SHALL WRAP A DOUBLE LAYER OF NON-WOVEN GEOTEXTILE FABRIC AROUND EACH JOINT OF THE 24"ø O-RING RCP BARREL IN 2' WIDE STRIPS CENTERED ON JOINT.
4. PLACE CONCRETE FOR CRADLE FOR EACH SECTION FROM ONE SIDE OF THE TRENCH. ALLOW CONCRETE TO FILL ENTIRE AREA UNDER PIPE AND PIPE HAUNCHES AS TO LEAVE NO VOIDS UNDER THE PIPE BEFORE PLACING CONCRETE ON THE OPPOSITE SIDE OF THE TRENCH. PLACE ENTIRE CRADLE AS ONE LIFT (VERTICALLY) PER DRAWINGS.
5. ALLOW CRADLE TO CURE FOR A MINIMUM OF 7 DAYS BEFORE ANY VIBRATING COMPACTION EQUIPMENT IS USED IN THE VICINITY OF THE BARREL PIPE.
6. TRENCH TO BE BACKFILLED IN 5" LIFTS WHEN COMPACTION IS BY HAND. BACKFILL IS IN 8" LIFTS WHEN CONDUCTED BY MACHINE. MINIMUM OF 2 FEET COVER MUST BE PRESENT ON 24"ø RCP BEFORE DRIVING OVER WITH HEAVY EQUIPMENT.

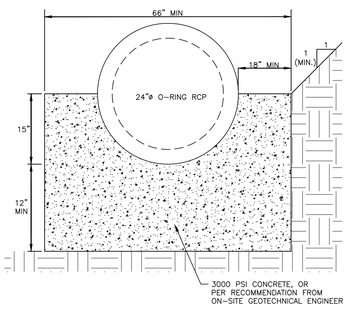

24" CONCRETE CRADLE DETAIL

N.T.S.

NOTES:

1. ALL REINFORCING STEEL IN RISER ANTI-FLOTATION BLOCK TO BE GRADE 60 #4 BARS FOR HORIZONTAL CROSSING AND GRADE 60 #4 BARS FOR VERTICAL CONNECTIONS.
2. INSIDE OF RISER BOTTOM TO BE FORMED WITH NON-SHRINK GROUT TO INVERT ELEVATION OF BARREL.
3. ALL PIPE PENETRATIONS THROUGH THE CONCRETE RISER STRUCTURE SHALL BE MADE WATERTIGHT.

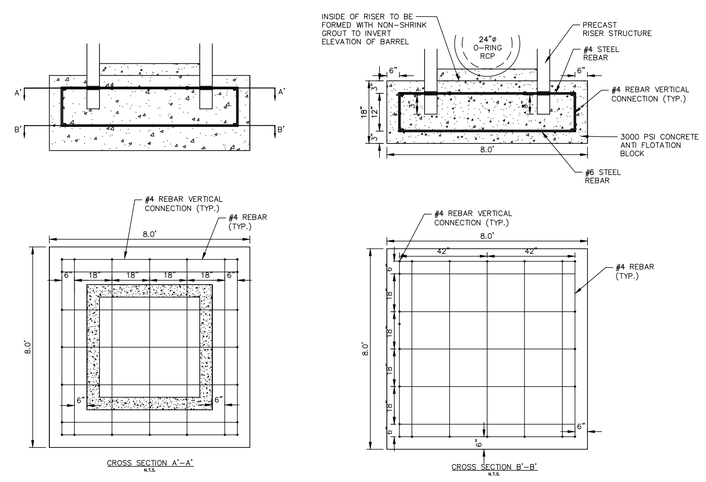

RISER/ANTI-FLOTATION BLOCK CONNECTION

N.T.S.

NOTES:

1. CHANNEL DIMENSION (1.0' DEEP, 6'.0 BOTTOM WIDTH) ARE TO TOP OF RIP-RAP IN CHANNEL. ACTUAL CHANNEL EXCAVATION MUST CONSIDER THICKNESS OF THE RIPRAP AND FILTER FABRIC LINER. BYPASS CHANNEL TO STOP AT TOP OF BANK.
2. A FILTER BLANKET IS TO BE INSTALLED BETWEEN THE RIPRAP AND SOIL FOUNDATION. THE FILTER BLANKET WILL CONSIST OF A MINIMUM 4" THICK LAYER OF STONE (NCDOT #57) UNDERLAIN WITH MIRAFI FILTER WEAVE 700 OR ENGINEER-APPROVED EQUIVALENT.
3. RIPRAP TO EXTEND TO TOP OF CHANNEL WITH 2:1 SIDE SLOPES THROUGHOUT THE EXTENT OF CHANNEL.

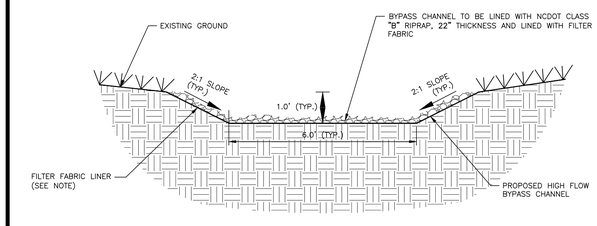

BYPASS CHANNEL DETAIL

N.T.S.

FINAL DRAWING - NOT RELEASED FOR CONSTRUCTION

M:\Projects\AWH\AWH-20000\04-Production\Water Resources\North Sink\Current Drawings\AWH20000 - SCM N.dwg, 10/27/2022 9:16:21 AM, Alex Thierer

McADAMS

The John R. McAdams Company, Inc.
2905 Meridian Parkway
Durham, NC 27713

phone 919. 361. 5000
fax 919. 361. 2269
license number: C-0293, C-187

www.mcadamsco.com

CLIENT

ASHTON WOODS
5711 SIX FORKS ROAD, SUITE 300
RALEIGH, NORTH CAROLINA 27609

ASHTON WOODS

THE POINT PHASES 11-13

CONSTRUCTION DRAWINGS
EAST YOUNG STREET
TOWN OF ROLESVILLE, WAKE FOREST TOWNSHIP,
WAKE COUNTY, NORTH CAROLINA

CD XX-XX

NORTH CAROLINA PROFESSIONAL SEAL 47257 ENGINEER KATHERINE E. GARCIA

NOT FOR CONSTRUCTION

REVISIONS

NO. DATE

PLAN INFORMATION

PROJECT NO.	AWH-20000
FILENAME	AWH20000 - SCM N
CHECKED BY	KEG
DRAWN BY	ABT
SCALE	N.T.S.
DATE	10.26.2022 :

SHEET

STORMWATER CONTROL MEASURE 'N' DETAILS

C9.06

STORMWATER CONTROL MEASURE 'N' PLANTING PLAN SPECIFICATIONS

LEGEND

QTY.	SYM.	SCIENTIFIC NAME	COMMON NAME	HATCH	TYPE	SPACING	% OF TOTAL AREA	PROVIDED AREA
HIGH MARSH (SHALLOW LAND, TOTAL AREA = 5,062 SF)								
257	SC	SAURURUS CERNUUS	LIZARD'S TAIL		4-INCH CONTAINER	24" O.C.	PROVIDED PERCENTAGE = 30%	1027 SF
395	HA	HELENIUM AUTUMNALE	SNEEZEWEED		4-INCH CONTAINER	24" O.C.	PROVIDED PERCENTAGE = 34%	1579 SF
614	CG	CHELONE GLABRA	WHITE TURTLEHEAD		4-INCH CONTAINER	24" O.C.	PROVIDED PERCENTAGE = 35%	2456 SF
LOW MARSH (SHALLOW WATER, TOTAL AREA = 6,981 SF)								
515	AC	ACORUS CALAMUS	SWEETFLAG		4-INCH CONTAINER	24" O.C.	PROVIDED PERCENTAGE = 32%	2057 SF
615	PP	PONTEDERIA PECTINATUS	PICKEREL WEED		4-INCH CONTAINER	24" O.C.	PROVIDED PERCENTAGE = 34%	2457 SF
617	NL	NUPHAR LUTEA SSP. ADVENA	YELLOW POND-LILY		4-INCH CONTAINER	24" O.C.	PROVIDED PERCENTAGE = 34%	2467 SF

(ASSUMED 1 STEM PER 4 SF FOR ALL CALCULATIONS)

SOD PREPARATION

1. CHISEL COMPACTED AREAS AND SPREAD TOPSOIL 3-4 INCHES DEEP OVER ADVERSE SOIL CONDITIONS, IF AVAILABLE. TOPSOIL SHOULD BE INCORPORATED INTO THE FINAL GRADING OF THE BASIN SIDE SLOPES AND AQUATIC SHELF. CONTRACTOR SHOULD SCARIFY THE TOP 3-4 INCHES OF THE COMPACTED FILL TO PROMOTE BONDING WITH TOPSOIL.
2. RIP THE ENTIRE AREA TO 6 INCHES DEPTH.
3. REMOVE ALL LOOSE ROCK, ROOTS, AND OTHER OBSTRUCTIONS LEAVING SURFACE REASONABLY SMOOTH AND UNIFORM.
4. PER ONE TIME ONLY, APPLY AGRICULTURAL LIME, FERTILIZER, AND SUPERPHOSPHATE UNIFORMLY AND MIX WITH SOIL.
5. CONTINUE TILLAGE UNTIL A WELL-PULVERIZED, FIRM REASONABLY UNIFORM SODBED IS PREPARED 4 TO 6 INCHES DEEP.
6. SOD ON A FRESHLY PREPARED SODBED AND COVER.
7. INSPECT ALL SODDED AREAS AND MAKE NECESSARY REPAIRS OR RESODDINGS WITHIN THE PLANTING SEASON, IF POSSIBLE. AFTER PERMANENT COVER IS ESTABLISHED.
8. CONSULT CONSERVATION INSPECTOR ON MAINTENANCE TREATMENT.

TEMPORARY SEEDING SCHEDULE

SEEDING DATE	SEEDING MIXTURE	APPLICATION RATE
JAN 1 - MAY 1	RYE (GRAIN)	120 LBS/AC
	KOBE LESPEDEZA	50 LBS/AC
MAY 1 - AUG 15	GERMAN MILLET	40 LBS/AC
AUG 15 - DEC 30	RYE (GRAIN)	120 LBS/AC

SOIL AMENDMENTS
FOLLOW RECOMMENDATIONS OF SOIL TESTS OR APPLY 2,000 LB/AC GROUND AGRICULTURE LIMESTONE AND 750 LB/AC 10-10-10 FERTILIZER (FROM AUG 15 - DEC 30, INCREASE 10-10-10 FERTILIZER TO 1000 LB/AC).

MULCH
APPLY 4000 LB/AC STRAW. ANCHOR STRAW BY TACKING WITH ASPHALT, NETTING, OR A MULCH ANCHORING TOOL. A DISK WITH BLADES SET NEARLY STRAIGHT CAN BE USED AS A MULCH ANCHORING TOOL.

MAINTENANCE
JAN 1 - AUG 15: REFERTILIZE IF GROWTH IS NOT FULLY ADEQUATE. RESEED, REFERTILIZE, AND MULCH IMMEDIATELY FOLLOWING EROSION OR OTHER DAMAGE.

AUG 15 - DEC 30: REPAIR AND REFERTILIZE DAMAGED AREAS IMMEDIATELY. TOP DRESS WITH 50 LB/AC OF NITROGEN IN MARCH. IF IT IS NECESSARY TO EXTEND TEMPORARY COVER BEYOND JUNE 15, OVERSEED WITH 50 LB/AC KOBE LESPEDEZA IN LATE FEBRUARY OR EARLY MARCH.

NOTE: USE THE TEMPORARY SEEDING SCHEDULE ONLY WHEN DATE IS NOT CORRECT TO USE THE PERMANENT SEEDING SCHEDULE.

PERMANENT SEEDING SCHEDULE (DAM EMBANKMENTS)

.

SEEDING DATE	SEEDING MIXTURE	APPLICATION RATE
MAY 1 - AUG 31	CENTIPEDE RAW	30 LBS/AC
APRIL 1 - SEPT 1	SUMMER MIX	200 LBS/AC
	(80% HULLED BERUMDA/20% MILLET)	
OCT 1 - MARCH 1	FALL MIX	200 LBS/AC
	(80% TALL FESCUE/20% ANNUAL RYGRASS)	

SOIL AMENDMENTS
FOLLOW RECOMMENDATIONS OF SOIL TESTS OR APPLY 4,000 LB/AC GROUND AGRICULTURE LIMESTONE AND 1000 LB/AC 10-10-10 FERTILIZER.

MULCH
APPLY 4000 LB/AC STRAW. ANCHOR STRAW BY TACKING WITH ASPHALT, NETTING, OR A MULCH ANCHORING TOOL. A DISK WITH BLADES SET NEARLY STRAIGHT CAN BE USED AS A MULCH ANCHORING TOOL.

MAINTENANCE
INSPECT AND REPAIR MULCH FREQUENTLY. REFERTILIZE IN LATE WINTER OF THE FOLLOWING YEAR; USE SOIL TESTS OR APPLY 150 LB/AC 10-10-10 FERTLIZER. MOW REGULARLY TO A HEIGHT OF 2-4 INCHES.

NOTE: PERMANENT SEEDING SCHEDULE IS FOR SLOPES OF THE BASIN AND DAM EMBANKMENT.

PLANTING INSTRUCTIONS

PLANTING TECHNIQUES
A. INSURE THAT ROOTS, ONCE REMOVED FROM POT, ARE STRAIGHTENED AND FACE DOWNWARD.
B. CREATE PLANTING AREA FOR EACH PLANT AND EXCAVATE PIT.
C. PLACE PLANTS IN PIT INSURING ROOTS ARE FACING COMPLETELY DOWNWARD.
D. HEEL IN SOIL AROUND PLANT AND PROCEED TO NEXT PLANTING LOCATION.
E. NEWLY PLANTED PLANTS NEED TO BE FASTENED TO THE SUBSTRATE FOR THE ESTABLISHMENT OF NEW ROOTS.
F. ROOTS SHALL BE SPREAD IN THEIR NORMAL POSITION. ALL BROKEN OR FRAYED ROOTS HALL BE CUT OFF CLEANLY.
G. THE DIAMETER OF THE PITS FOR ALL VEGETATIVE STOCK SHALL BE AT LEAST THREE TIMES THE DIAMETER OF THE ROOT MASS. PLANT PIT WALL SHALL BE SCARIFIED PRIOR TO PLANT INSTALLATION.
H. SET THE PLANTS UPRIGHT, IN THE CENTER OF THE PIT. THE BOTTOM OF THE ROOT MASS SHOULD BE RESTING ON UNDISTURBED SOIL.
I. PLACE THE BACKFILL AROUND THE BASE AND SIDES OF THE ROOT MASS, AND WORK EACH LAYER TO SETTLE BACKFILL AND TO ELIMINATE VOIDS AND AIR POCKETS. WHEN PIT IS APPROXIMATELY 2/3 FULL, WATER THOROUGHLY BEFORE PLACING REMAINDER OF THE BACKFILL. WATER AGAIN AFTER PLACING FINAL LAYER OF BACKFILL.
J. BROKEN OR DAMAGED PARTS WILL BE CUT BACK TO UNDAMAGED TISSUE, LEAVING AS MUCH GREEN BASAL TISSUE AS POSSIBLE ABOVE THE ROOTS. IF MORE THAN FIFTY PERCENT (50%) OF THE PLANT IS DAMAGED THEN CONTRACTOR SHALL REPLACE THE PLANT.

CONTAINER STOCK / BARE ROOT
A. STOCK SHALL HAVE BEEN GROWN IN A CONTAINER LONG ENOUGH FOR THE ROOT SYSTEM TO HAVE DEVELOPED SUFFICIENTLY TO HOLD ITS SOIL TOGETHER ONCE REMOVED FROM THE CONTAINER.
B. CONTAINER PLANTS WILL NEED TO BE WATERED REGULARLY AND PLACED IN SHADY CONDITIONS UNTIL PLANTING OCCURS.
C. BARE ROOT PLANTS ARE FOR IMMEDIATE PLANTING, OTHERWISE SEE D) BELOW.
D. IF BARE ROOTS SPECIMENS ARE NOT TO BE PLANTED WITHIN FOUR (4) DAYS, TEMPORARY HOLDING OF BARE ROOT SPECIMENS ARE TO BE COVERED ENTIRELY BY A SUITABLE MEDIUM (ETC. SOIL, SAWDUST, MULCH OR THE LIKE) AND WATERED REGULARLY SO AS TO NOT DRY OUT.

PLANT LOCATIONS
A. NEW PLANTINGS SHALL BE LOCATED WHERE SHOWN ON PLAN EXCEPT WHERE CHANGES HAVE BEEN MADE IN PROPOSED CONSTRUCTION.
B. NECESSARY ADJUSTMENTS SHALL BE MADE ONLY AFTER APPROVAL BY THE OWNER OR THE OWNER'S REPRESENTATIVE.

WATER
WATER SHALL BE POTABLE AND SHALL NOT CONTAIN ELEMENTS TOXIC TO PLANT LIFE.

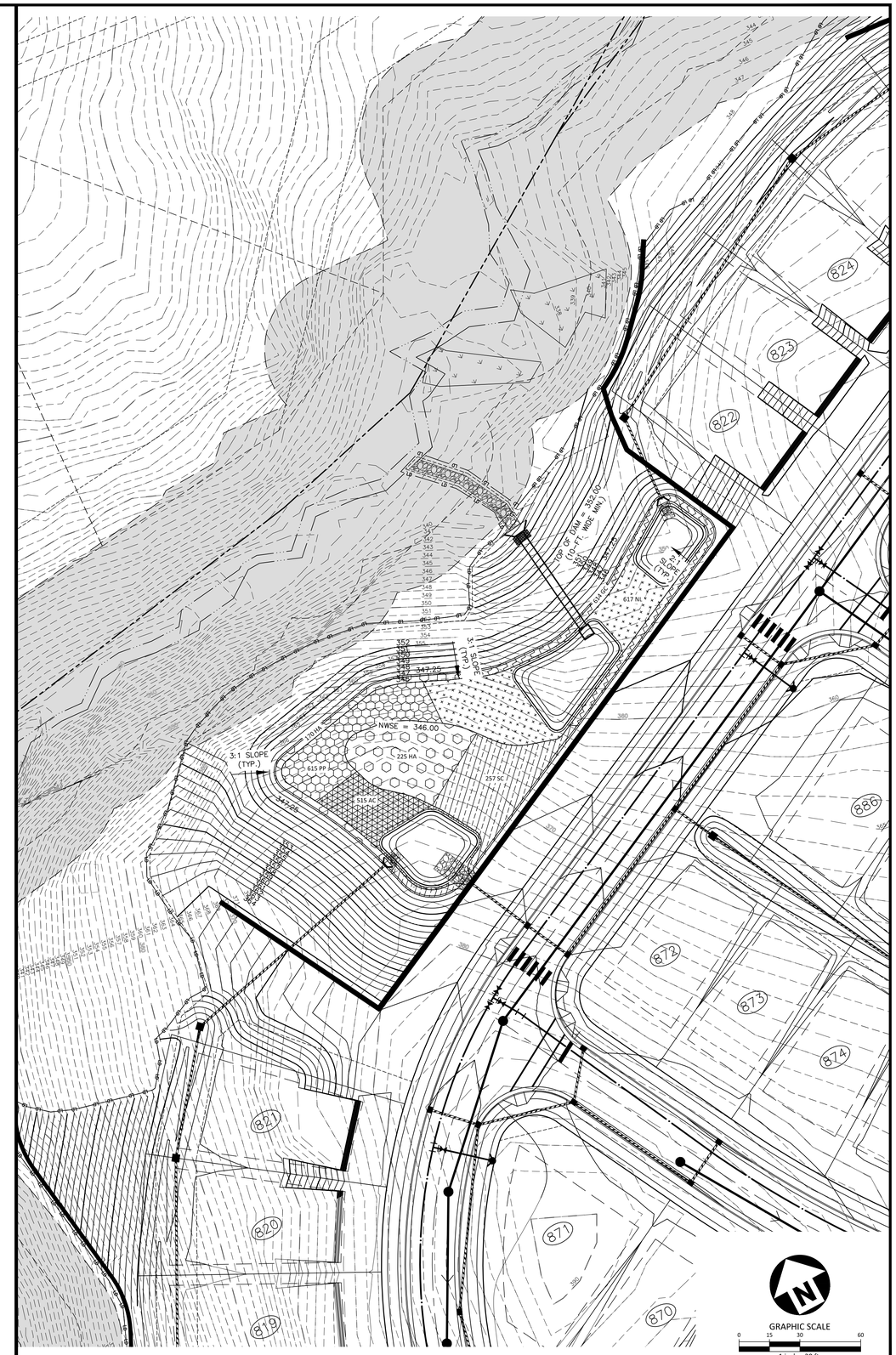

STORMWATER CONTROL MEASURE 'N' PLAN VIEW
1" = 30'

FINAL DRAWING - NOT RELEASED FOR CONSTRUCTION

McADAMS
The John R. McAdams Company, Inc.
2905 Meridian Parkway
Durham, NC 27713

phone 919. 361. 5000
fax 919. 361. 2269
license number: C-0293, C-187

www.mcadamsco.com

CLIENT
ASHTON WOODS
5711 SIX FORKS ROAD, SUITE 300
RALEIGH, NORTH CAROLINA 27609

ASHTON WOODS

THE POINT
PHASES 11-13
CONSTRUCTION DRAWINGS
EAST YOUNG STREET
TOWN OF ROLESVILLE, WAKE FOREST TOWNSHIP,
WAKE COUNTY, NORTH CAROLINA

CD XX-XX

NORTH CAROLINA PROFESSIONAL ENGINEER SEAL 47257 CATHERINE E. GARCIA
NOT FOR CONSTRUCTION

REVISIONS
NO. DATE

PLAN INFORMATION

PROJECT NO.	AWH-20000
FILENAME	AWH20000 - SCM N
CHECKED BY	KEG
DRAWN BY	ABT
SCALE	1" = 30'
DATE	10.27.2022

SHEET
STORMWATER CONTROL MEASURE 'N' LANDSCAPE PLAN
C9.07

M:\Projects\AWH\AWH-20000\04-Production\Water Resources\North Site\Current Drawings\AWH20000 - SCM N.dwg, 10/27/2022 9:16:49 AM, Alex Thierer

STORMWATER CONTROL MEASURE 'O' CONSTRUCTION SPECIFICATIONS

GENERAL NOTES

1. PRIOR TO CONSTRUCTION, ANY DISCREPANCIES IN THE PLANS AND NOTES SHALL BE BROUGHT TO THE DESIGN ENGINEER'S ATTENTION IMMEDIATELY.

2. THE PROJECT WILL MEET ALL OF THE REQUIREMENTS RELATIVE TO BEST MANAGEMENT PRACTICES AND ENGINEERED STORMWATER CONTROL STRUCTURES AS OUTLINED IN THE TOWN OF ROLESVILLE AND LAND DEVELOPMENT ORDINANCE.

3. THE FINAL CERTIFICATION FOR THIS FACILITY WILL INCLUDE A CERTIFICATION BY THE ON-SITE GEOTECHNICAL ENGINEER THAT THE PROJECT WAS CONSTRUCTED PER THE APPROVED PLANS. IT IS THE RESPONSIBILITY OF THE CONTRACTOR TO COORDINATE WITH THE ON-SITE GEOTECHNICAL ENGINEER FOR OBSERVATION AND TESTING SUCH THAT THE ON-SITE GEOTECHNICAL ENGINEER CAN CERTIFY THE CONSTRUCTION OF THE DAM EMBANKMENT AND SPILLWAY. THIS CERTIFICATION MUST ADDRESS THE TESTING FOR MATERIALS AND COMPACTION OF THE DAM EMBANKMENT AND SPILLWAY.

4. ALL CONSTRUCTION ACTIVITY RELATED TO THE PROPOSED STORMWATER CONTROL MEASURE SHALL BE PER THE DETAILS AND SPECIFICATIONS SHOWN IN THESE DRAWINGS. SOILS, COMPACTION, AND OTHER MISCELLANEOUS DETAILS AND SPECIFICATIONS MAY BE MODIFIED PER THE RECOMMENDATIONS OF THE ON-SITE GEOTECHNICAL ENGINEER. HOWEVER, PRIOR TO IMPLEMENTATION, THE DESIGN ENGINEER SHALL BE NOTIFIED OF ANY DEVIATION FROM THESE DESIGN DRAWINGS, INCLUDING SHOP DRAWINGS FOR ANY PROPOSED MODIFICATION.

5. DURING THE INITIAL STAGES OF CONSTRUCTION, THE STORMWATER CONTROL MEASURE MAY BE USED AS A SEDIMENT BASIN FOR EROSION CONTROL PURPOSES. IF SO, THE CONTRACTOR SHALL FOLLOW THE GENERAL CONSTRUCTION SEQUENCE BELOW:
   A. THE CONTRACTOR SHALL CONSTRUCT THE ENTIRE FACILITY (PERMANENT OUTLET STRUCTURE, DAM, ETC.) WITH THE EXCEPTION OF THE INTERIOR FINE GRADING FOR THE FACILITY. THE INTERIOR FINE GRADING WILL BE CONSTRUCTED ONCE THE EROSION CONTROL PHASE IS COMPLETE.
   B. THE TEMPORARY DRAW DOWN RISER (OR SKIMMER) SHALL BE CONNECTED TO THE PERMANENT 6"Ø DIP DRAIN PIPE.
   C. ONCE THE UPSTREAM DRAINAGE AREA IS STABILIZED AND THE EROSION CONTROL INSPECTOR APPROVES THE REMOVAL OF THE SEDIMENT BASIN, THE CONTRACTOR SHALL REMOVE THE TEMPORARY DRAW DOWN RISER (OR SKIMMER) AND CLEAN OUT THE BASIN. ALL SEDIMENT, TRASH, ETC. SHALL BE DISPOSED OF PROPERLY (I.E. - PLACED IN A LANDFILL) AND NOT STOCKPILED IN AN AREA WHERE WATER QUALITY COULD BE ADVERSELY AFFECTED.
   D. ONCE THE BASIN IS CLEANED OUT, AND ALL EROSION CONTROL DEVICES REMOVED, THE CONTRACTOR SHALL CONSTRUCT THE INTERIOR GRADING SHOWN ON THIS SHEET.
   E. ONCE THE GRADING IS COMPLETE, THE CONTRACTOR SHALL REQUEST AN ON-SITE INSPECTION AND AN AS-BUILT SURVEY PRIOR TO INSTALLATION OF THE STORMWATER CONTROL MEASURE PLANTS. IF THE CONTRACTOR PLANTS THE PROPOSED VEGETATION PRIOR TO AN AS-BUILT SURVEY (AND SUBSEQUENT APPROVAL), ANY CHANGES TO THE GRADING / RE-PLANTING OF PLANTS WILL BE AT THE CONTRACTOR'S EXPENSE.
   F. ONCE THE ENGINEER HAS APPROVED THE AS-BUILT GRADING, THE CONTRACTOR SHALL PLANT THE PROPOSED STORMWATER CONTROL MEASURE PLANTS SHOWN ON THE LANDSCAPE PLAN FOR THE FACILITY. AFTER COMPLETION OF THE PLANTING, THE LANDSCAPE CONTRACTOR SHALL PROVIDE A LETTER TO THE ENGINEER CERTIFYING THAT THE PLANTS HAVE BEEN INSTALLED PER THE APPROVED STORMWATER CONTROL MEASURE PLANTING PLAN.

6. ALL OSHA REQUIREMENTS FOR EXCAVATIONS (SHORING, DEPTH, ETC.) ARE THE RESPONSIBILITY OF THE CONTRACTOR. IF REQUIRED, THE CONTRACTOR SHALL PROVIDE AN EXCAVATION PLAN TO BE SEALED BY A NC P.E. IT IS THE RESPONSIBILITY OF THE CONTRACTOR TO DETERMINE IF AN EXCAVATION PLAN IS REQUIRED. THE JOHN R. MCADAMS COMPANY ASSUMES NO RESPONSIBILITY FOR ANY EXCAVATION DESIGN RELATED TO SAFETY OR OSHA REQUIREMENTS.

7. ON-SITE GEOTECHNICAL ENGINEER TO DETERMINE IF IN-SITU SOILS ENCOUNTERED WOULD MAINTAIN A STORMWATER CONTROL MEASURE PERMANENT POOL AT DESIGN ELEVATION. IF HIGHLY PERMEABLE SOILS ARE ENCOUNTERED THAT WOULD NOT MAINTAIN THE PERMANENT POOL ELEVATION AS DESIGNED, A CLAY LINER MAY BE REQUIRED TO MAINTAIN A PERMANENT POOL OF WATER IN THE STORMWATER CONTROL MEASURE. FINAL DETERMINATION IF A CLAY LINER IS NEEDED SHALL BE THE RESPONSIBILITY OF THE ON-SITE GEOTECHNICAL ENGINEER. UPON DETERMINATION OF HIGHLY PERMEABLE SOIL CONDITIONS, ON-SITE GEOTECHNICAL ENGINEER WILL INFORM THE DESIGN ENGINEER AND RECOMMEND LINER SPECIFICATIONS.

8. IT IS ANTICIPATED THAT DEWATERING WILL BE NECESSARY IN THE EXCAVATION AREAS (E.G. - EMBANKMENT SUB GRADE, INTERIOR PORTIONS OF THE STORMWATER CONTROL MEASURE, KEY TRENCH, ETC.). THEREFORE, THE CONTRACTOR SHALL FURNISH, INSTALL, OPERATE, AND MAINTAIN ANY PUMPING EQUIPMENT, ETC. NEEDED FOR REMOVAL OF WATER FROM VARIOUS PARTS OF THE STORMWATER CONTROL MEASURE SITE. DURING PLACEMENT OF FILL WITHIN THESE AREAS, THE CONTRACTOR SHALL KEEP THE WATER LEVEL BELOW THE BOTTOM OF THE EXCAVATION / CONSTRUCTION AREAS. THE MANNER IN WHICH THE WATER IS REMOVED SHALL BE SUCH THAT THE EXCAVATION BOTTOM AND SIDE SLOPES ARE STABLE, WITH NO SEDIMENT DISCHARGED FROM THE SITE (I.E. PUMPED WATER MAY NEED TO BE DIRECTED TO AN APPROVED EROSION CONTROL DEVICE SUCH AS A DIRT BAG (ACF ENVIRONMENTAL), OR ENGINEER APPROVED EQUIVALENT, PRIOR TO DISCHARGE).

OUTLET STRUCTURE MATERIAL SPECIFICATIONS

1. THE 24"Ø RCP OUTLET BARREL SHALL BE CLASS III RCP, MODIFIED BELL AND SPIGOT, MEETING THE REQUIREMENTS OF ASTM C76-LATEST. THE PIPES SHALL HAVE CONFINED O-RING RUBBER GASKET JOINTS MEETING ASTM C-443-LATEST. THE PIPE JOINTS SHALL BE TYPE R-4.

2. THE STRUCTURAL DESIGN FOR THE 4' X 4' (INTERNAL DIMENSIONS) RISER BOX WITH EXTENDED BASE SHALL BE BY OTHERS. PRIOR TO ORDERING THE STRUCTURES, THE CONTRACTOR SHALL PROVIDE, TO THE DESIGN ENGINEER FOR REVIEW, SHOP DRAWINGS AND SUPPORTING STRUCTURAL CALCULATIONS SEALED BY A P.E. REGISTERED IN NORTH CAROLINA DEMONSTRATING THE PERTINENT VERTICAL LOADS ARE SUPPORTED BY THE CONCRETE RISER STRUCTURE.

3. THE RISER BOX OUTLET STRUCTURE SHALL BE PROVIDED WITH STEPS 16" ON CENTER. STEPS SHALL BE PROVIDED ON THE INNER WALL OF THE RISER BOX. STEPS SHALL BE IN ACCORDANCE WITH NCDOT STD. 840.66. PLEASE REFER TO SHEET C9.09 FOR LOCATION OF THE RISER STEPS. NOTE THE STEPS SHALL LINE UP WITH THE ACCESS HATCH OF THE TRASH RACK.

4. THE CONCRETE ANTI-FLOTATION BLOCK SHALL BE CAST-IN-PLACE. STEEL REINFORCEMENT AND CONNECTION TO THE RISER SHALL BE PROVIDED IN ACCORDANCE WITH THE DETAIL ON SHEET C9.10. THE CONTRACTOR SHALL ENSURE THE WEIGHT OF THE ENTIRE RISER STRUCTURE IS GREATER THAN OR EQUAL TO 16,783 LBS. IN LIEU OF CAST-IN-PLACE, THE CONTRACTOR MAY OPT FOR A PRECAST ANTI-FLOTATION BLOCK. SHOP DRAWINGS FOR THE PRECAST BLOCK SHALL BE SUBMITTED TO THE ENGINEER FOR REVIEW. THE PRECAST ANTI-FLOTATION BLOCK SHALL HAVE A SHIPPING WEIGHT OF 9,088 LBS.

5. THE RISER BOX JOINTS SHALL BE SEALED USING BUTYL RUBBER SEALANT CONFORMING TO ASTM-C990-LATEST. IF NECESSARY, THE CONTRACTOR SHALL INCORPORATE A WATERSTOP INTO THE RISER BOX JOINT TO ENSURE A WATERTIGHT CONNECTION. THE CONTRACTOR SHALL PARGE JOINTS ON BOTH THE INSIDE AND OUTSIDE WITH NON-SHRINK GROUT AND INSTALL GALVANIZED STEEL STRAPS PER DETAIL ON SHEET C9.09.

6. PRIOR TO ORDERING, THE CONTRACTOR SHALL SUBMIT TRASH RACK SHOP DRAWINGS TO THE ENGINEER FOR REVIEW. CONTRACTOR SHALL ENSURE THAT AN ACCESS HATCH IS PROVIDED WITHIN THE TRASH RACK (SEE DETAIL FOR LOCATION) THAT WILL ALLOW FOR FUTURE MAINTENANCE ACCESS. CONTRACTOR SHALL ALSO PROVIDE A CHAIN AND LOCK FOR SECURING THE ACCESS HATCH. NOTE THE ACCESS HATCH SHALL LINE UP WITH THE ACCESS STEPS AFTER INSTALLATION.

7. ALL POURED CONCRETE SHALL MEET THE FOLLOWING SPECIFICATIONS UNLESS OTHERWISE NOTED:

   -MINIMUM 3000 PSI (28 DAY)
   -SLUMP = 3" - 5"
   -ENTRAINED AIR = 5% - 7%

   PLEASE NOTE NO CONCRETE SHALL BE POURED WHEN THE AMBIENT AIR TEMPERATURES ARE EXPECTED TO BE ABOVE 85°F OR BELOW 40°F. CAST-IN-PLACE CONCRETE SHALL BE "WET CURED" AFTER FINISHING FOR A MINIMUM OF 48 HOURS.

   ON-SITE GEOTECHNICAL ENGINEER TO ENSURE AND CERTIFY ALL POURED CONCRETE MEETS THE ABOVE SPECIFICATIONS.

8. GEOTEXTILE FABRIC FOR THE 24"Ø RCP OUTLET BARREL JOINTS SHALL BE MIRAFI 180N OR ENGINEER APPROVED EQUAL (NON-WOVEN FABRIC).

9. STORMWATER CONTROL MEASURE EMERGENCY DRAW DOWN IS VIA AN 6"Ø PLUG VALVE. THE VALVE SHALL BE A M&H STYLE 1820 ECCENTRIC VALVE OR APPROVED EQUAL. THIS VALVE IS IN ACCORDANCE WITH AWWA C-517, AND SHALL BE OPERABLE FROM TOP OF OUTLET STRUCTURE VIA A HAND WHEEL (SEE DETAIL SHEET C9.09). THE CONTRACTOR SHALL PROVIDE A REMOVABLE VALVE WRENCH WITH A HAND WHEEL ON TOP FOR OPERATION OF THE 6"Ø PLUG VALVE.

CONSTRUCTION SEQUENCE

1. PRIOR TO CONSTRUCTION, THE OWNER SHALL OBTAIN A LAND DISTURBING (GRADING) PERMIT AND AN "APPROVAL TO CONSTRUCT" FROM THE TOWN OF ROLESVILLE AND ALL OTHER NECESSARY PERMITS FROM APPLICABLE AGENCIES (E.G. 404 / 401 PERMITS)

2. INSTALL ALL SEDIMENT AND EROSION CONTROL MEASURES PER THE APPROVED SEDIMENT AND EROSION CONTROL PLAN. THE CONTRACTOR SHALL MAINTAIN ALL APPROVED SEDIMENT AND EROSION CONTROL MEASURES THROUGHOUT THE ENTIRE PROJECT, AS REQUIRED. THE CONTRACTOR SHALL RECEIVE APPROVAL FROM THE EROSION CONTROL INSPECTOR, AS REQUIRED BY GOVERNING AGENCIES, PRIOR TO ANY CLEARING.

3. CLEAR AND GRUB AREA WITHIN THE LIMITS OF THE PROPOSED DAM CONSTRUCTION. ALL TREES AND THEIR ENTIRE ROOT SYSTEMS MUST BE REMOVED FROM THE DAM FOOTPRINT AREA AND BACKFILLED WITH SUITABLE SOIL MATERIAL. THE BACKFILLED AREAS SHALL BE COMPACTED TO THE SAME STANDARDS AS THE DAM EMBANKMENT. THE REMAINING AREA OF THE EMBANKMENT SHALL BE STRIPPED TO A SUITABLE DEPTH AS DIRECTED BY THE ON-SITE GEOTECHNICAL ENGINEER. ANY RESIDUAL SOILS TO BE LEFT IN PLACE MUST BE WELL SCARIFIED TO PROMOTE BONDING OF THE NEW EMBANKMENT FILL. NO EMBANKMENT MATERIAL SHALL BE PLACED FOR THE DAM OR KEY TRENCH UNTIL APPROVAL OF THE DAM SUBGRADE IS OBTAINED FROM THE ON-SITE GEOTECHNICAL ENGINEER.

4. EXCAVATE FOR THE NEW KEY TRENCH ALONG THE CENTERLINE OF THE PROPOSED DAM EMBANKMENT. THE TRENCH SHALL EXTEND A MINIMUM OF 5 FT BELOW EXISTING GRADE OR 2 FT BELOW THE 24"Ø RCP OUTLET BARREL AND SHALL HAVE A MINIMUM BOTTOM WIDTH OF 5 FEET. THE KEY TRENCH SIDESLOPES SHALL BE A MINIMUM OF 1:1 (H:V). WHEN EXCAVATING THE KEY TRENCH, IF ANY DEBRIS IS ENCOUNTERED TO AN EXTENT THAT SUCH DEBRIS MAY EXIST IN OTHER INSITU PORTIONS OF THE DAM EMBANKMENT, IT SHOULD ALSO BE REMOVED. THE KEY TRENCH SHALL BE COMPACTED TO THE SAME SPECIFICATION LISTED IN ITEM 4 OF THE SECTION TITLED "BERM AND SOIL COMPACTION SPECIFICATIONS." DEPENDING UPON ON-SITE SOIL CONDITIONS ENCOUNTERED DURING EXCAVATION, THE ON-SITE GEOTECHNICAL ENGINEER MAY VARY THE DEPTH AND DIMENSIONS OF THE KEY TRENCH AS DEEMED NECESSARY. THE ON-SITE GEOTECHNICAL ENGINEER SHALL RETAIN DOCUMENTATION OF ANY VARIATION FOR FUTURE AS-BUILT SUBMITTALS TO THE TOWN OF ROLESVILLE.

5. BEGIN PLACEMENT OF BACKFILL WITHIN THE KEY TRENCH. THE KEY TRENCH SHALL BE COMPACTED TO THE SPECIFICATIONS LISTED ITEM 4 OF THE SECTION TITLED "BERM AND SOIL COMPACTION SPECIFICATIONS." THE KEY TRENCH SHALL BE TESTED PER THE SPECIFICATIONS LISTED IN THAT SECTION.

6. PRIOR TO INSTALLATION, SUBGRADE CONDITIONS ALONG THE SPILLWAY PIPES SHOULD BE EVALUATED BY THE ON-SITE GEOTECHNICAL ENGINEER TO ASSESS WHETHER SUITABLE BEARING CONDITIONS EXIST AT THE SUBGRADE LEVEL. SHOULD SOFT OR OTHERWISE UNSUITABLE CONDITIONS BE ENCOUNTERED ALONG THE PIPE ALIGNMENTS, THESE MATERIALS SHOULD BE UNDERCUT AS DIRECTED BY THE GEOTECHNICAL ENGINEER. THE UNDERCUT MATERIALS SHALL BE REPLACED WITH ADEQUATELY COMPACTED STRUCTURAL FILL, LEAN CONCRETE OR FLOWABLE FILL AS DIRECTED BY THE ON-SITE GEOTECHNICAL ENGINEER.

7. IN ORDER TO HELP PROTECT THE SOIL SUBGRADE FROM DETERIORATION (DUE TO EXPOSURE, RAINFALL, SEEPAGE, AND RUNOFF) BEFORE THE CRADLE CAN BE POURED, IT IS STRONGLY RECOMMENDED THAT A 3" TO 4" THICK CONCRETE MUD MAT BE POURED OVER THE SUBGRADE ONCE IT IS APPROVED BY THE ON-SITE GEOTECHNICAL ENGINEER. THE MUD MAT WILL ALSO PROVIDE BEARING FOR THE BLOCKS THAT TEMPORARILY SUPPORT THE SPILLWAY PIPE UNTIL THE CRADLE CAN BE POURED. THE METHOD OF BLOCK SUPPORT FOR THE PIPE PROPOSED BY THE CONTRACTOR SHOULD BE SUBMITTED TO THE JOHN R. MCADAMS COMPANY FOR REVIEW.

8. BEGIN CONSTRUCTION OF THE NEW EMBANKMENT. FILL MATERIALS SHALL BE PLACED IN MAXIMUM 8" THICK LIFTS PRIOR TO COMPACTION, UNLESS DIRECTED OTHERWISE BY THE ON-SITE GEOTECHNICAL ENGINEER. FILL LIFTS SHALL BE CONTINUOUS OVER THE ENTIRE LENGTH OF FILL. IF IT IS NECESSARY, THE EMBANKMENT FILL MATERIAL WILL BE OVERBUILT IN HORIZONTAL LIFTS AND CUT BACK TO FINAL GRADE IN ORDER TO ACHIEVE PROPER COMPACTION.

9. AS CONSTRUCTION OF THE EMBANKMENT MOVES FORWARD, IT WILL BE NECESSARY TO INSTALL THE CONCRETE CRADLE. SEE NOTE ON CRADLE DETAIL (SHEET C9.10). THIS MAY BE CONSTRUCTED USING ONE OF THE FOLLOWING METHODS:

   A. IF THE PROPOSED STRUCTURAL FILL MATERIAL IS UTILIZED AS THE FORMWORK FOR THE CONCRETE CRADLE, THEN THE STRUCTURAL FILL SHOULD BE INSTALLED AND COMPACTED UP TO THE TOP OF CONCRETE CRADLE ELEVATION. ONCE THE STRUCTURAL FILL REACHES THE NEXT DOWNSTREAM JUNCTION BOX OR HEADWALL AND IS COMPACTED TO THE ELEVATION OF THE TOP OF THE CONCRETE CRADLE, EXCAVATE THE CONCRETE CRADLE TRENCH PER THE PROVIDED DETAILS AND CONSTRUCT THE CONCRETE CRADLE AS PER THE PROVIDED CONCRETE CRADLE DETAIL.

   B. IF THE PROPOSED STRUCTURAL FILL IS NOT UTILIZED AS THE FORMWORK FOR THE CONCRETE CRADLE, THEN PRIOR TO CONSTRUCTING THE STRUCTURAL FILL EMBANKMENT, THE FORMWORK FOR THE CONCRETE CRADLE SHOULD BE INSTALLED ON EXISTING GROUND AND/OR THE MUD MAT. THE CONCRETE CRADLE SHALL BE CONSTRUCTED PER THE PROVIDED DETAILS

10. INSTALL RISER / BARREL ASSEMBLY, ALONG WITH THE EMERGENCY DRAIN SYSTEM. INSTALL 24" RCP OUTLET BARREL SPILLWAY FILTER FROM THE DETAILS SHOWN ON SHEET C9.10.

11. CONSTRUCT EMBANKMENT PER SPECIFICATIONS LISTED IN THE SECTION TITLED "BERM AND SOIL COMPACTION SPECIFICATIONS" AND REQUIREMENTS OF THE ON-SITE GEOTECHNICAL ENGINEER. ALL CHARACTERISTICS OF THE EMBANKMENT FILL MATERIAL SHALL MEET THE STANDARDS SET FORTH IN "BERM AND SOIL COMPACTION SPECIFICATIONS", INCLUDING COMPACTION AND MOISTURE REQUIREMENTS. IF NECESSARY TO ACHIEVE PROPER COMPACTION, THE EMBANKMENT FILL MATERIAL WILL BE OVERBUILT IN HORIZONTAL LIFTS AND CUT BACK TO PROPER FINAL GRADE. ANY HAND COMPACTION ACTIVITIES AROUND SPILLWAY OR DRAIN STRUCTURES SHALL BE CONDUCTED IN 4-INCH LOOSE LIFTS AND BE TO THE SAME COMPACTION AND MOISTURE REQUIREMENTS AS THE ENTIRE EMBANKMENT. ALL COMPACTION AND MOISTURE TESTING SHALL BE CARRIED OUT AS DIRECTED BY THE ON-SITE GEOTECHNICAL ENGINEER AND AS LISTED IN THE SECTION TITLED "BERM AND SOIL COMPACTION SPECIFICATIONS".

12. UPON COMPLETION OF DAM EMBANKMENT, PROMPTLY STABILIZE AND SEED DAM EMBANKMENT PER SEEDING SCHEDULE. PERMANENT GROUND COVER SHALL BE ESTABLISHED PER THE PERMANENT SEEDING SCHEDULE FOUND ON SHEET C9.11.

13. SCHEDULE A FINAL AS-BUILT INSPECTION AND AS-BUILT SURVEY WITH THE ENGINEER AND SURVEYOR. AN AS-BUILT INSPECTION AND SURVEY SHALL BE SCHEDULED BEFORE IMPOUNDING WATER IN THE FACILITY AND A MINIMUM OF 60 DAYS PRIOR TO THE ANTICIPATED DATE OF CERTIFICATION APPROVAL. ANY COMMENTS OR DEFICIENCIES IN THE SCM CONSTRUCTION MUST BE CORRECTED TO THE SATISFACTION OF THE ENGINEER AND OWNER BEFORE CERTIFICATION SHALL BE GRANTED.

BERM AND SOIL COMPACTION SPECIFICATIONS

1. PRIOR TO CONSTRUCTION, THE ON-SITE GEOTECHNICAL ENGINEER SHALL IDENTIFY BORROW / FILL AREAS AND VERIFY THEIR SUITABILITY FOR USE WITHIN THE DAM EMBANKMENT. ALSO, THE ON-SITE GEOTECHNICAL ENGINEER SHALL PERFORM STANDARD PROCTORS ON THE PROPOSED BORROW MATERIAL TO ENSURE THAT OPTIMUM MOISTURE CONTENT AND COMPACTION CAN BE ACHIEVED / CONTROLLED DURING CONSTRUCTION.

2. ALL FILL MATERIALS TO BE USED FOR THE DAM EMBANKMENT SHALL BE TAKEN FROM BORROW AREAS APPROVED BY THE ON-SITE GEOTECHNICAL ENGINEER. THE FILL MATERIAL SHALL BE FREE FROM ROOTS, STUMPS, WOOD, STONES GREATER THAN 6", AND FROZEN OR OTHER OBJECTIONABLE MATERIAL. THE FOLLOWING SOIL TYPES ARE SUITABLE FOR USE AS FILL WITHIN THE DAM EMBANKMENT AND KEY TRENCH: ML AND CL. ALL FILL MATERIALS SHALL BE APPROVED BY THE ONSITE GEOTECHNICAL ENGINEER FOR THE INTENDED USE.

3. FILL PLACEMENT FOR THE EMBANKMENT SHALL NOT EXCEED A MAXIMUM 8" LIFT (UNCOMPACTED). EACH LIFT SHALL BE CONTINUOUS FOR THE ENTIRE LENGTH OF EMBANKMENT. BEFORE PLACEMENT OF FILL FOR THE BERM SECTION, ALL UNSUITABLE MATERIAL SHALL BE REMOVED AND THE SURFACE PROPERLY PREPARED FOR FILL PLACEMENT. FILL MATERIAL ADJACENT TO ALL SPILLWAY AND DRAINAGE STRUCTURES SHALL BE PLACED IN 4-INCH (UNCOMPACTED) LIFTS AND HAND-COMPACTED TO THE SAME COMPACTION AND MOISTURE REQUIREMENTS AS THE ENTIRE EMBANKMENT.

4. ALL FILL SOILS USED IN THE EMBANKMENT CONSTRUCTION SHALL BE COMPACTED TO AT LEAST 95% OF THE STANDARD PROCTOR MAXIMUM DRY DENSITY (ASTM D-698). THE FILL SOILS SHALL BE COMPACTED AT A MOISTURE CONTENT WITHIN -1 TO +3 PERCENT OF ITS OPTIMUM MOISTURE CONTENT. COMPACTION TESTS SHALL BE PERFORMED BY THE ON-SITE GEOTECHNICAL ENGINEER DURING CONSTRUCTION TO VERIFY THAT THE PROPER COMPACTION LEVEL HAS BEEN REACHED. THE FILL SHOULD BE COMPACTED USING A SHEEPSFOOT TYPE COMPACTOR. IN ORDER TO PREVENT DAMAGE TO THE PIPE, NO COMPACTION EQUIPMENT SHALL CROSS ANY PIPE UNTIL MINIMUM COVER IS ESTABLISHED ALONG THE PIPE.

5. THE DESIGN ENGINEER SHALL BE PROVIDED WITH REPORTS AND CERTIFICATION, BY THE ON-SITE GEOTECHNICAL ENGINEER, THAT THE GEOTECHNICAL ASPECTS OF THE FACILITY HAVE BEEN CONSTRUCTED PER PLAN. THIS CERTIFICATION MUST ADDRESS THE TESTING FOR MATERIALS AND COMPACTION OF THE DAM EMBANKMENT AND SPILLWAY. THESE REPORTS AND CERTIFICATION WILL BE NEEDED DURING THE AS-BUILT CERTIFICATION PROCESS FOR THIS STORMWATER CONTROL MEASURE. THEREFORE, IT SHALL BE THE CONTRACTOR'S RESPONSIBILITY TO COORDINATE TESTING AND OBSERVATION WITH THE ON-SITE GEOTECHNICAL ENGINEER.

6. TESTING OF THE NEW FILL MATERIALS SHALL BE PERFORMED TO VERIFY THAT THE RECOMMENDED LEVEL OF COMPACTION IS ACHIEVED DURING CONSTRUCTION. THEREFORE, ONE DENSITY TEST SHALL BE PERFORMED FOR EVERY 2,500 SQUARE FEET OF AREA FOR EVERY LIFT OF FILL OR AS RECOMMENDED BY THE ON-SITE GEOTECHNICAL ENGINEER.

7. TESTING WILL BE REQUIRED ALONG THE 24"Ø RCP OUTLET BARREL AT A FREQUENCY OF ONE TEST PER 25 LF OF PIPE PER VERTICAL FOOT OF FILL OR AS DIRECTED BY THE ON-SITE GEOTECHNICAL ENGINEER.

STATEMENT OF RESPONSIBILITY

1. ALL REQUIRED MAINTENANCE AND INSPECTIONS OF THE STORMWATER CONTROL MEASURE SHALL BE THE RESPONSIBILITY OF THE OWNER, PER THE EXECUTED OPERATION AND MAINTENANCE AGREEMENT FOR THIS FACILITY.

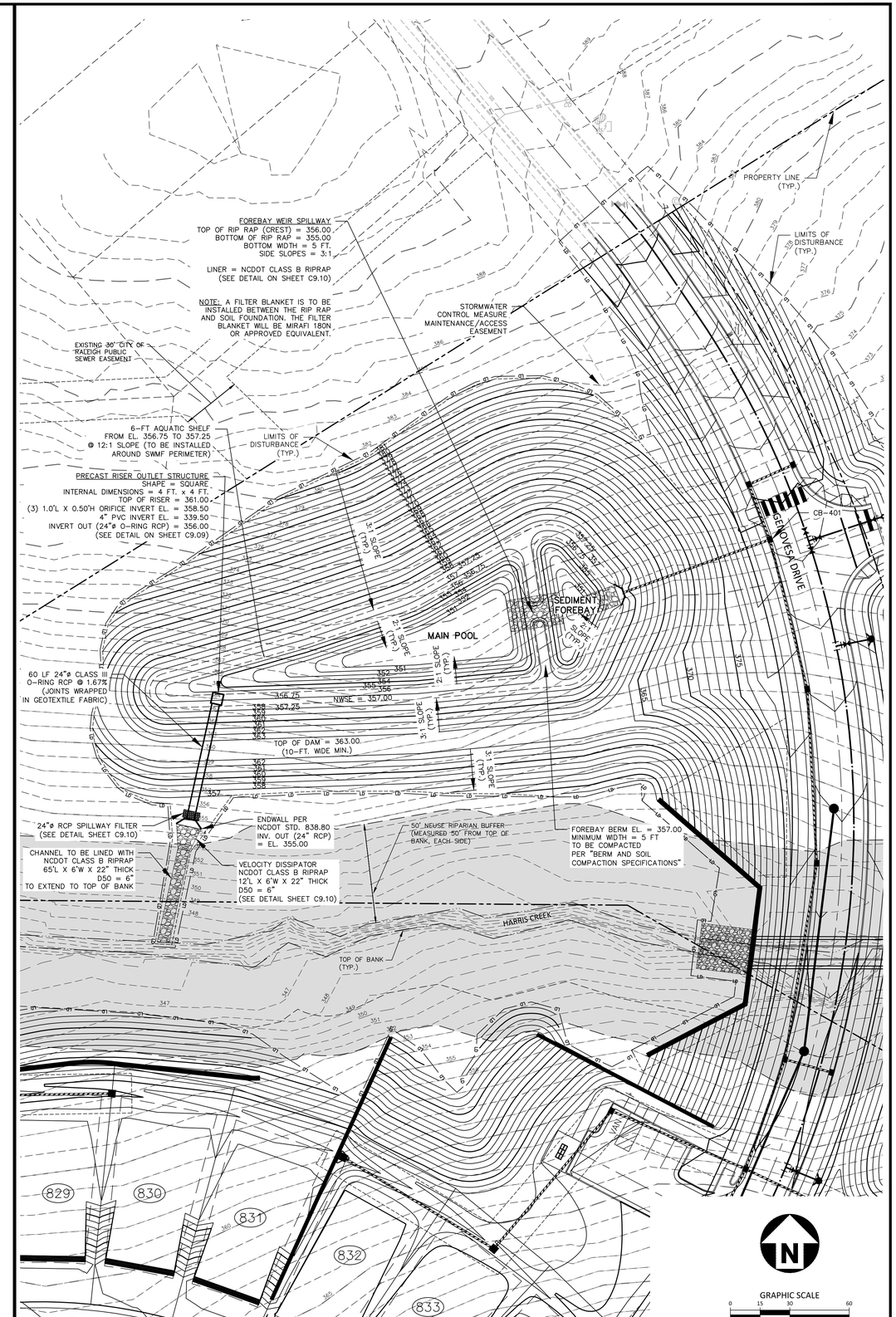

STORMWATER CONTROL MEASURE 'O' PLAN VIEW
1" = 30'

FINAL DRAWING - NOT RELEASED FOR CONSTRUCTION

McADAMS
The John R. McAdams Company, Inc.
2905 Meridian Parkway
Durham, NC 27713
phone 919. 361. 5000
fax 919. 361. 2269
license number: C-0293, C-187
www.mcadamsco.com

CLIENT

ASHTON WOODS
5711 SIX FORKS ROAD, SUITE 300
RALEIGH, NORTH CAROLINA 27609

ASHTON WOODS

THE POINT
PHASES 11-13
CONSTRUCTION DRAWINGS
EAST YOUNG STREET
TOWN OF ROLESVILLE, WAKE FOREST TOWNSHIP, WAKE COUNTY, NORTH CAROLINA

CD XX-XX

NORTH CAROLINA PROFESSIONAL SEAL 47257 ENGINEER KATHERINE E. GARCIA
NOT FOR CONSTRUCTION

REVISIONS

NO. DATE

PLAN INFORMATION

PROJECT NO.	AWH-20000
FILENAME	AWH20000 - SCM O
CHECKED BY	KEG
DRAWN BY	SDD
SCALE	1" = 30'
DATE	10. 27. 2022

SHEET

STORMWATER CONTROL MEASURE 'O' PLAN VIEW

C9.08

M:\Projects\AWH\AWH-20000\04-Production\Water Resources\North Site\Current Drawings\AWH20000 - SCM O.dwg, 10/27/2022 9:17:23 AM, Alex Thierer

NOTE:

1. REMOVED TOPSOIL SHALL BE STOCKPILED FOR USE IN PLANTING (SEEDING) THE DAM EMBANKMENT ONCE FINAL GRADES (AS SHOWN ON THE GRADING PLAN) HAVE BEEN ESTABLISHED WITH COMPACTED FILL. PRIOR TO TOPSOIL INSTALLATION, THE CONTRACTOR SHALL SCARIFY THE TOP 2– TO 3–INCHES OF THE BERMN SECTION TO PROMOTE BONDING OF THE TOPSOIL WITH THE COMPACTED FILL. THE TOPSOIL DEPTH SHALL RANGE FROM 3– TO 4–INCHES ON THE DAM EMBANKMENT.

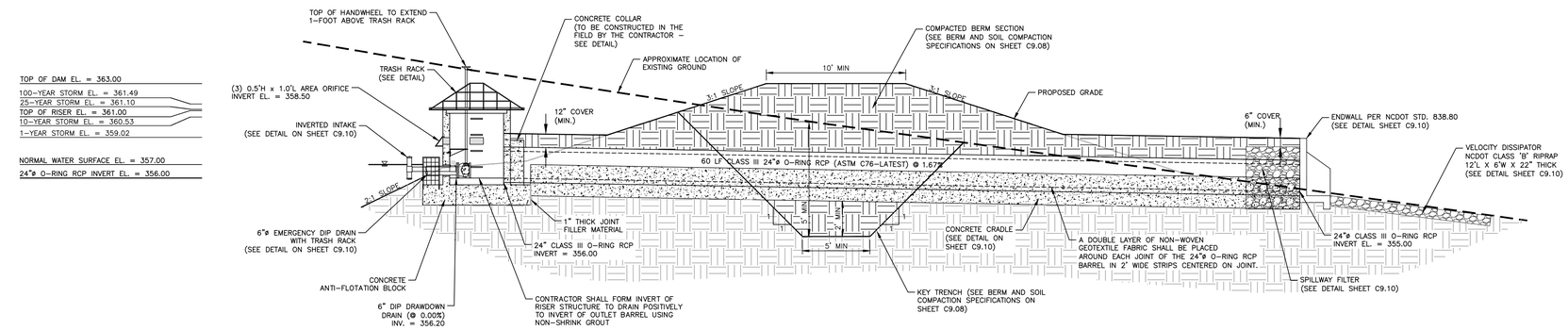

PERMANENT DAM CROSS SECTION
N.T.S.

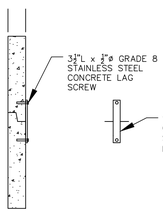

RISER JOINT CONNECTION DETAIL
N.T.S.

NOTES:

1. CONCRETE ANTI-FLOTATION BLOCK TO BE PROVIDED WITH MINIMUM TEMPERATURE AND SHRINKAGE STEEL REINFORCEMENT.

2. TRASH RACKS NOT SHOWN FOR CLARITY.

3. THE NUMBER OF GUIDES FOR THE VALVE STEM SHALL BE DETERMINED IN THE FIELD BY THE CONTRACTOR. THE VALVE STEM MUST BE OPERABLE FROM THE TOP OF THE RISER VIA THE HANDWHEEL WITH AN INSIGNIFICANT AMOUNT OF PLAY IN THE VALVE STEM.

4. CONTRACTOR SHALL PROVIDE A JOINT IN THE OUTLET BARREL NO MORE THAN 5-FT FROM THE RISER.

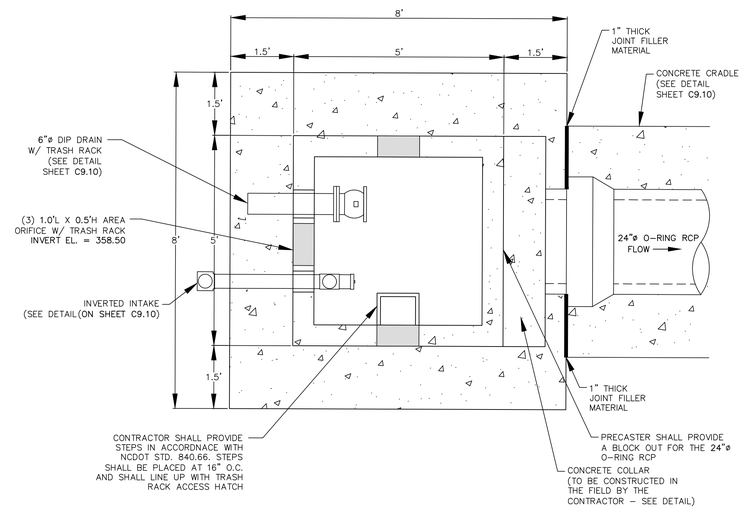

NOTES:

1. ALL REBAR TO BE #4 REBAR.
2. WRAP OUTSIDE OF PIPE WITH VOLCLAY WATERSTOP–RX® 101 (OR PRE–APPROVED EQUIVALENT) AT THE FACE OF THE PRECAST STRUCTURE WALL. PROVIDE 6" OVER LAP ON THE BOTTOM OF THE PIPE.

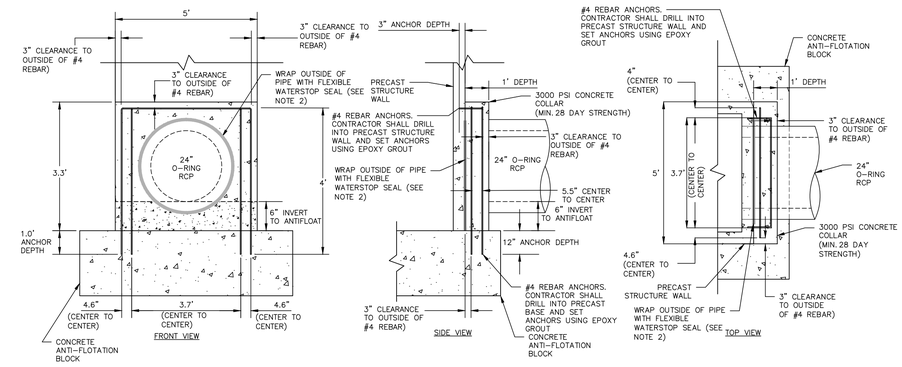

24"ø CONCRETE COLLAR DETAIL
N.T.S.

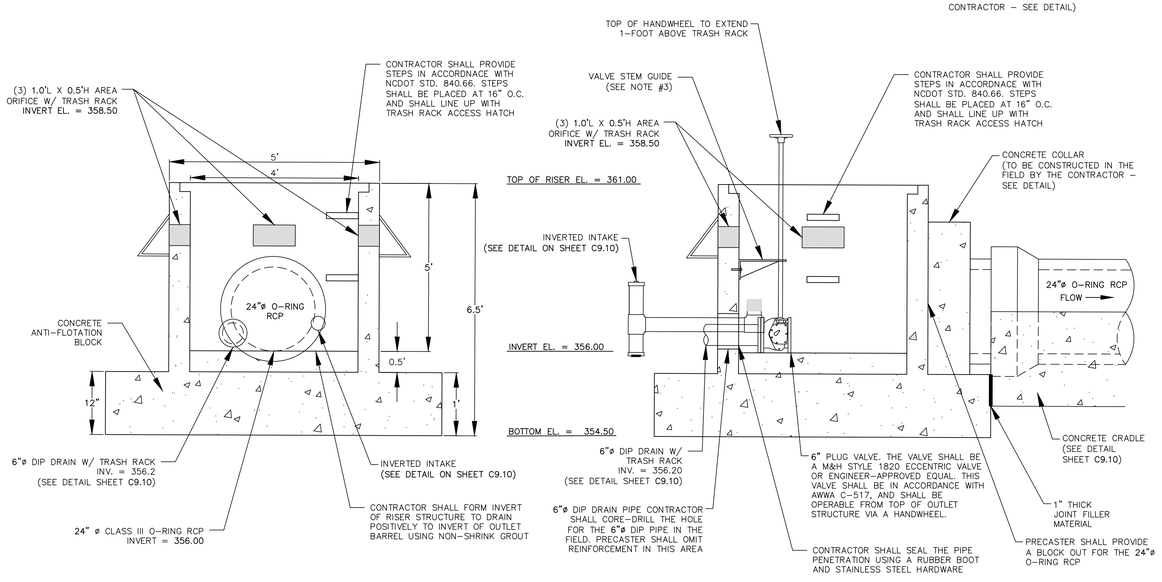

PERMANENT OUTLET STRUCTURE DETAILS
N.T.S.

NOTES:
1. ALL REBAR TO BE #4 REBAR.
2. ALL REBAR AND ANGLES TO BE HOT–DIPPED GALVANIZED AND BE PROVIDED WITH AN EPOXY COATING.
3. THE HOT–DIPPED, GALVANIZED 2"x2"x1/4" ANGLES SHALL BE WELDED TO THE REBAR TRASH RACK. ONCE WELDED, THE ENTIRE ASSEMBLY SHALL BE PLACED ONTO THE RISER WITH ANGLES SITTING DIRECTLY ON TOP OF RISER.
4. TRASH RACK IS TO BE SECURELY FASTENED TO THE SPILLWAY RISER WITH A MINIMUM OF FOUR CORROSION–RESISTANT ANCHORS.
5. ACCESS HATCH SHALL ALIGN WITH STEPS IN RISER.

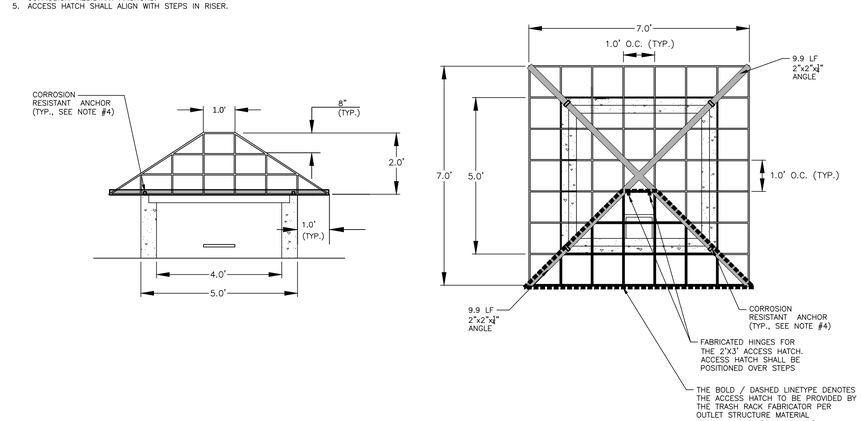

4'X4' RISER TRASH RACK DETAIL
N.T.S.

FINAL DRAWING - NOT RELEASED FOR CONSTRUCTION

McADAMS
The John R. McAdams Company, Inc.
2905 Meridian Parkway
Durham, NC 27713

phone 919. 361. 5000
fax 919. 361. 2269
license number: C-0293, C-187

www.mcadamsco.com

CLIENT

ASHTON WOODS
5711 SIX FORKS ROAD, SUITE 300
RALEIGH, NORTH CAROLINA 27609

ASHTON WOODS

THE POINT
PHASES 11-13
CONSTRUCTION DRAWINGS
EAST YOUNG STREET
TOWN OF ROLESVILLE, WAKE FOREST TOWNSHIP, WAKE COUNTY, NORTH CAROLINA

CD XX-XX

NORTH CAROLINA PROFESSIONAL SEAL 47257 ENGINEER CATHERINE E. GARCIA
NOT FOR CONSTRUCTION

REVISIONS

NO. DATE

PLAN INFORMATION

PROJECT NO.	AWH-20000
FILENAME	AWH20000 - SCM O
CHECKED BY	KEG
DRAWN BY	SDD
SCALE	NTS
DATE	10. 27. 2022

SHEET

STORMWATER CONTROL MEASURE 'O' DETAILS

C9.09

M:\Projects\AWH\AWH-20000\04-Production\Water Resources\North Site\Current Drawings\AWH20000 - SCM O.dwg, 10/27/2022 9:17:32 AM, Alex Therrer

NOTES:

1. A FILTER BLANKET IS TO BE INSTALLED BETWEEN THE RIPRAP AND SOIL FOUNDATION. THE FILTER BLANKET WILL CONSIST OF A MINIMUM 4" THICK LAYER OF STONE (NCDOT #57) UNDERLAIN WITH MIRAFI FILTER WEAVE 700 OR ENGINEER-APPROVED EQUIVALENT.

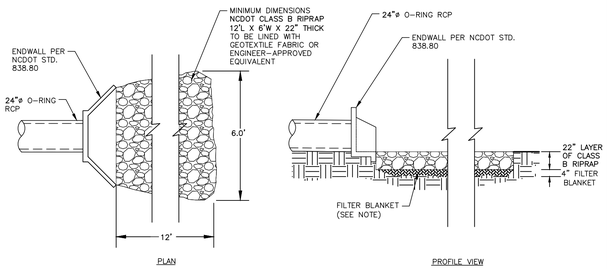

OUTLET BARREL VELOCITY DISSIPATER

N.T.S.

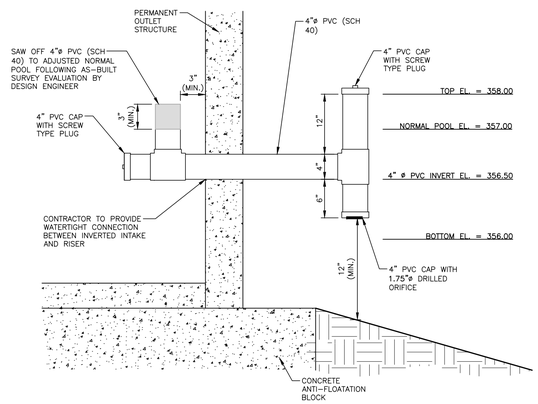

INVERTED INTAKE OUTLET DETAIL

N.T.S.

NOTES:
INSTALL ALL STEPS PROTRUDING 4" FROM INSIDE FACE OF STRUCTURE WALL.
STEPS DIFFERING IN DIMENSIONS, CONFIGURATION, OR MATERIALS FROM THOSE SHOWN MAY ALSO BE USED PROVIDED THE CONTRACTOR HAS FURNISHED THE ENGINEER WITH DETAILS OF THE PROPOSED STEPS AND HAS RECEIVED WRITTEN APPROVAL FROM THE ENGINEER FOR THE USE OF SUCH STEPS.

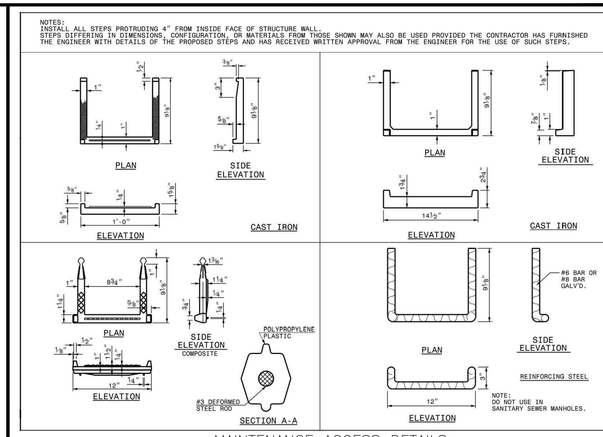

STATE OF NORTH CAROLINA DEPT. OF TRANSPORTATION DIVISION OF HIGHWAYS RALEIGH, N.C.

1-18

ROADWAY STANDARD DRAWING FOR
DRAINAGE STRUCTURE STEPS

SHEET 1 OF 1
840.66

MAINTENANCE ACCESS DETAILS

N.T.S.

NOTE:

1. HAVILAND DRAINAGE PRODUCTS 4" ALUMINUM ANIMAL GUARD ITEM NUMBER AGSS04 (OR ENGINEER APPROVED EQUIVALENT) TO BE INSTALLED AT OUTLET OF 4" HDPE PIPES

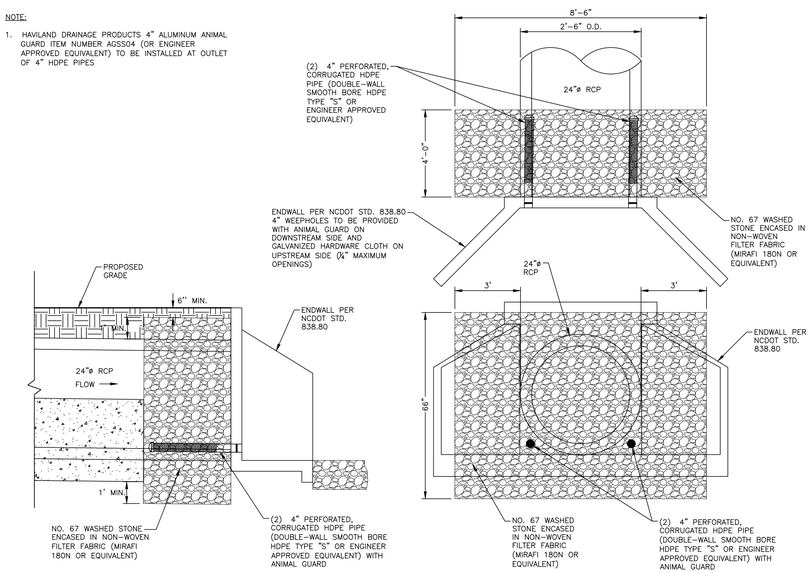

24" SPILLWAY FILTER DETAIL

N.T.S.

NOTES:

1. ATTACH TRASH RACK WITH (4) HOT DIPPED GALVANIZED STEEL CLAMPS. EACH CLAMP ATTACHED TO WEIR BOX BY (2) 4"x1/4" CONCRETE ANCHOR BOLTS. EACH CLAMP SHALL BE COATED WITH AN EPOXY COATING.
2. ALL REBAR TO BE GALVANIZED #4 REBAR WITH AN EPOXY COATING.
3. BARS TO EXTEND ON BOTTOM OF TRASH RACK.

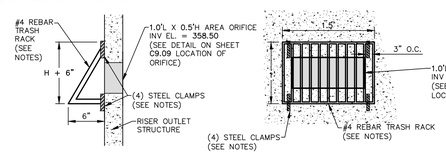

AREA ORIFICE TRASH RACK DETAIL

N.T.S.

NOTES:

1. A FILTER BLANKET IS TO BE INSTALLED BETWEEN THE RIP RAP AND SOIL FOUNDATION. THE FILTER BLANKET WILL BE MIRAFI 180N OR APPROVED EQUIVALENT.

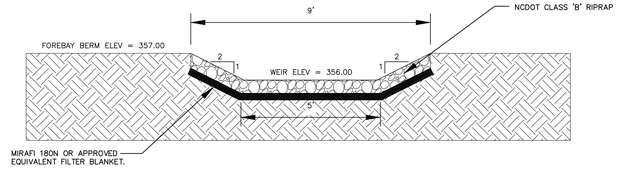

FOREBAY WEIR SPILLWAY CROSS-SECTION

N.T.S.

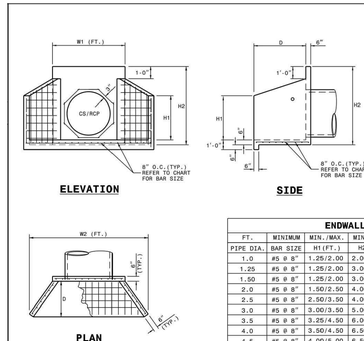

NOTES:

* THIS PRECAST ENDWALL MAY BE USED FOR THE FOLLOWING STANDARDS: 838.01, 838.11, 838.21, 838.27, 838.33, 838.39, 838.51, 838.57, 838.63 AND 838.69.
* INSTALL PRECAST ENDWALLS WITH WINGS AND PAY FOR IN ACCORDANCE WITH SPECIFICATION SECTION 838.
* USE 4000 PSI CONCRETE.
* PROVIDE ALL REINFORCING STEEL WHICH MEETS ASTM A615 FOR GRADE 60 AND WELDED WIRE FABRIC CONFORMING TO ASTM A185 WITH 2" MIN. CLEARANCE.
* PLACE LIFT HOLES OR PINS IN ACCORDANCE WITH OSHA STANDARD 1926.704.
* PIPE TO BE GROUTED INTO HEADWALL AT JOB SITE BY CONTRACTOR
* ALL ELEMENTS PRECAST TO MEET ASTM C913.
* WELDED WIRE FABRIC MAY BE SUBSTITUTED FOR REBAR AS LONG AS THE SAME AREA OF STEEL IS PROVIDED.
* CHAMFER ALL CORNERS 1" OR HAVE A RADIUS OF 1".

NOTE: THE MINIMUM BAR SIZE SHALL BE #5 BARS AT 8" CTS.FOR CONTRACTOR WILL HAVE THE OPTION TO INCREASE THIS BAR SIZE AS NEEDED.

ENDWALL DIMENSIONS

FT.	MINIMUM	MIN./MAX.	MIN./MAX.	MIN./MAX.	MIN./MAX.	MIN./MAX.
PIPE DIA.	BAR SIZE	H1(FT.)	H2(FT.)	D (FT.)	W1	W2
1.0	#5 @ 8"	1.25/2.00	2.00/3.75	1.25/1.75	3.00/3.75	5.50/6.00
1.25	#5 @ 8"	1.25/2.00	3.00/3.75	1.25/2.00	3.50/3.75	6.50/6.75
1.50	#5 @ 8"	1.25/2.00	3.00/4.25	1.50/2.50	3.50/3.75	6.50/6.75
2.0	#5 @ 8"	1.50/2.50	4.00/4.75	1.75/2.50	4.00/4.25	7.50/8.25
2.5	#5 @ 8"	2.50/3.50	4.00/6.00	2.00/3.00	4.50/5.50	10.00/11.50
3.0	#5 @ 8"	3.00/3.50	5.00/6.00	2.75/3.50	5.25/5.75	11.50/11.75
3.5	#5 @ 8"	3.25/4.50	6.00/6.75	3.25/3.50	6.00/6.75	12.00/13.25
4.0	#5 @ 8"	3.50/4.50	6.50/7.00	3.25/3.50	6.50/6.75	13.00/13.25
4.5	#5 @ 8"	4.00/5.00	6.50/8.50	3.25/4.00	7.00/9.25	13.50/15.75
5.0	#5 @ 8"	4.50/5.00	7.00/8.50	3.25/4.00	7.25/9.25	13.75/15.75
5.5	#5 @ 8"	4.50/5.00	7.50/8.50	3.25/4.00	7.25/9.25	14.00/15.75
6.0	#5 @ 8"	4.50/5.00	7.50/8.50	3.25/4.00	7.75/9.25	14.75/16.75

STATE OF NORTH CAROLINA DEPT. OF TRANSPORTATION DIVISION OF HIGHWAYS RALEIGH, N.C.

1-18

ROADWAY STANDARD DRAWING FOR
PRECAST CONCRETE ENDWALL
FOR SINGLE 12" THRU 72" PIPE ø5° SKEW

SHEET 1 OF 1
838.80

ENDWALL DETAILS

N.T.S.

NOTES:

1. CONTRACTOR SHALL PROVIDE A JOINT IN THE OUTLET BARREL NO MORE THAN 5-FT FROM THE RISER.

BARREL PIPE CONCRETE CRADLE CONSTRUCTION SEQUENCE

1. IF OPTION A IS CHOSEN FROM NOTE 9 OF THE OUTLET STRUCTURE MATERIAL SPECIFICATIONS, THEN BRING GRADE OF DAM EMBANKMENT TO SPRINGLINE OF PIPE ELEVATION. IF OPTION B IS CHOSEN FROM NOTE 9 OF THE OUTLET STRUCTURE MATERIAL SPECIFICATIONS, THEN CONSTRUCT FORMWORK FOR CONCRETE CRADLE ON EXISTING GRADE.
2. IF OPTION A IS CHOSEN FROM NOTE 9 OF THE OUTLET STRUCTURE MATERIAL SPECIFICATIONS, THEN EXCAVATE TRENCH FOR CRADLE AND BARREL PER DIMENSIONS ON DRAWINGS. IF OPTION B IS CHOSEN FROM NOTE 9 OF THE OUTLET STRUCTURE MATERIAL SPECIFICATIONS, PROCEED TO STEP 3 BELOW.
3. PLACE BARREL PIPE ON CONCRETE BLOCKS TO GRADE. AT THIS STEP, CONTRACTOR SHALL WRAP A DOUBLE LAYER OF NON-WOVEN GEOTEXTILE FABRIC AROUND EACH JOINT OF THE 24"ø O-RING RCP BARREL IN 2' WIDE STRIPS CENTERED ON JOINT.
4. PLACE CONCRETE FOR CRADLE FOR EACH SECTION FROM ONE SIDE OF THE TRENCH. ALLOW CONCRETE TO FILL ENTIRE AREA UNDER PIPE AND PIPE HAUNCHES AS TO LEAVE NO VOIDS UNDER THE PIPE BEFORE PLACING CONCRETE ON THE OPPOSITE SIDE OF THE TRENCH. PLACE ENTIRE CRADLE AS ONE LIFT (VERTICALLY) PER DRAWINGS.
5. CONCRETE CRADLE MAY BE ELIMINATED PER RECOMMENDATION FROM THE ON-SITE GEOTECHNICAL ENGINEER. ANY DEVIATION FROM THIS DETAIL SHALL BE SUBMITTED TO AND REVIEWED BY THE DESIGN ENGINEER PRIOR TO IMPLEMENTATION. IF THE CRADLE IS ELIMINATED, THEN A LETTER FROM AN NC PE CERTIFYING THAT ALL SOIL MATERIAL UNDER, AROUND, AND ABOVE THE BARREL PIPE MEETS THE BERM MATERIAL SPECIFICATIONS IS REQUIRED.
6. ALLOW CRADLE TO CURE FOR A MINIMUM OF 7 DAYS BEFORE ANY VIBRATING COMPACTION EQUIPMENT IS USED IN THE VICINITY OF THE BARREL PIPE.
7. TRENCH TO BE BACKFILLED IN 5" LIFTS WHEN COMPACTION IS BY HAND. BACKFILL IS IN 8" LIFTS WHEN CONDUCTED BY MACHINE. MINIMUM OF 2 FEET COVER MUST BE PRESENT ON 24"ø RCP BEFORE DRIVING OVER WITH HEAVY EQUIPMENT.

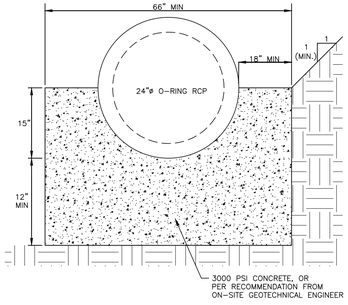

24" CONCRETE CRADLE DETAIL

N.T.S.

NOTES:

1. ALL REINFORCING STEEL IN RISER ANTI-FLOTATION BLOCK TO BE GRADE 60 #4 BARS FOR HORIZONTAL CROSSING AND GRADE 60 #4 BARS FOR VERTICAL CONNECTIONS.
2. INSIDE OF RISER BOTTOM TO BE FORMED WITH NON-SHRINK GROUT TO INVERT ELEVATION OF BARREL.
3. ALL PIPE PENETRATIONS THROUGH THE CONCRETE RISER STRUCTURE SHALL BE MADE WATERTIGHT.

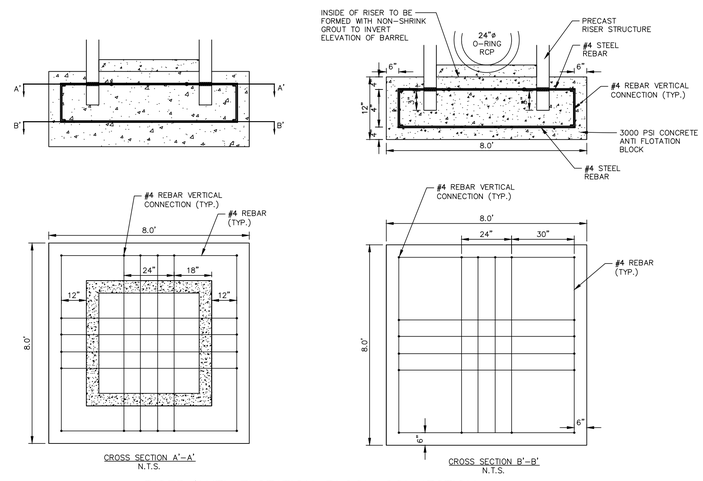

RISER/ANTI-FLOTATION BLOCK CONNECTION

N.T.S.

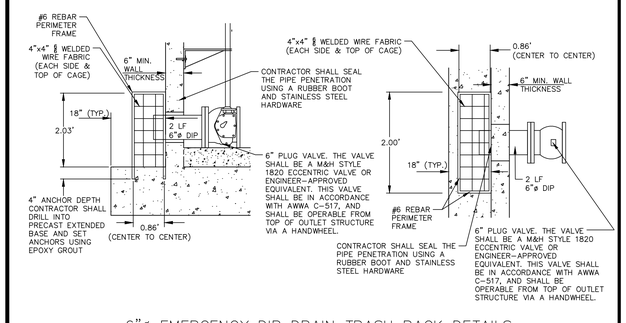

6"Ø EMERGENCY DIP DRAIN TRASH RACK DETAILS

N.T.S.

FINAL DRAWING - NOT RELEASED FOR CONSTRUCTION

M:\Projects\AWH\AWH-20000\04-Production\Water Resources\North Site\Current Drawing\AWH20000 - SCM O.dwg, 10/27/2022 9:17:41 AM, Alex Thierer

McADAMS
The John R. McAdams Company, Inc.
2905 Meridian Parkway
Durham, NC 27713

phone 919. 361. 5000
fax 919. 361. 2269
license number: C-0293, C-187

www.mcadamsco.com

CLIENT

ASHTON WOODS
5711 SIX FORKS ROAD, SUITE 300
RALEIGH, NORTH CAROLINA 27609

ASHTON WOODS

THE POINT PHASES 11-13

CONSTRUCTION DRAWINGS
EAST YOUNG STREET
TOWN OF ROLESVILLE, WAKE FOREST TOWNSHIP, WAKE COUNTY, NORTH CAROLINA

CD XX-XX

NORTH CAROLINA PROFESSIONAL SEAL 47257 ENGINEER KATHERINE E. GARCIA
NOT FOR CONSTRUCTION

REVISIONS

NO. DATE

PLAN INFORMATION

PROJECT NO.	AWH-20000
FILENAME	AWH20000 - SCM O
CHECKED BY	KEG
DRAWN BY	SDD
SCALE	NTS
DATE	10. 27. 2022

SHEET

STORMWATER CONTROL MEASURE 'O' DETAILS

C9.10

STORMWATER CONTROL MEASURE 'O' LANDSCAPE SPECIFICATIONS

LEGEND

QTY.	SYM.	SCIENTIFIC NAME	COMMON NAME	HATCH	TYPE	SPACING
SHALLOW WATER						
140	IV	IRIS VIRGINIANA	BLUE FLAG IRIS		4-INCH CONTAINER	24" O.C.
164	PC	PONTEDERIA CORDATA	PICKEREL WEED		4-INCH CONTAINER	24" O.C.
122	ST	SCHOENOPLECTUS TABERNAEMONTANI	SOFT-STEM BULRUSH		4-INCH CONTAINER	24" O.C.
SHALLOW LAND						
143	CS	CAREX SPP.	SEDGES		4-INCH CONTAINER	24" O.C.
106	CA	CRINUM AMERICANUM	AMERICAN CRINUM LILY		4-INCH CONTAINER	24" O.C.
149	HA	HIBISCUS ACULEATUS	PINELANDS MALLOW		4-INCH CONTAINER	24" O.C.

SEEDBED PREPARATION

1. CHISEL COMPACTED AREAS AND SPREAD TOPSOIL 3-4 INCHES DEEP OVER ADVERSE SOIL CONDITIONS. TOPSOIL SHOULD BE INCORPORATED INTO THE FINAL GRADING OF THE BASIN SIDE SLOPES AND AQUATIC SHELF. CONTRACTOR SHOULD SCARIFY THE TOP 3-4 INCHES OF THE COMPACTED FILL TO PROMOTE BONDING WITH TOPSOIL.
2. RIP THE ENTIRE AREA TO 6 INCHES DEPTH.
3. REMOVE ALL LOOSE ROCK, ROOTS, AND OTHER OBSTRUCTIONS LEAVING SURFACE REASONABLY SMOOTH AND UNIFORM.
4. PER ONE TIME ONLY, APPLY AGRICULTURAL LIME, FERTILIZER, AND SUPERPHOSPHATE UNIFORMLY AND MIX WITH SOIL.
5. CONTINUE TILLAGE UNTIL A WELL-PULVERIZED, FIRM REASONABLY UNIFORM SEEDBED IS PREPARED 4 TO 6 INCHES DEEP.
6. SEED ON A FRESHLY PREPARED SEEDBED AND COVER.
7. MULCH IMMEDIATELY AFTER SEEDING AND ANCHOR MULCH.
8. INSPECT ALL SEEDED AREAS AND MAKE NECESSARY REPAIRS OR RESEEDINGS WITHIN THE PLANTING SEASON, IF POSSIBLE. AFTER PERMANENT COVER IS ESTABLISHED.
9. CONSULT CONSERVATION INSPECTOR ON MAINTENANCE TREATMENT.

TEMPORARY SEEDING SCHEDULE

SEEDING DATE	SEEDING MIXTURE	APPLICATION RATE
JAN 1 - MAY 1	RYE (GRAIN)	120 LBS/AC
	KOBE LESPEDEZA	50 LBS/AC
MAY 1 - AUG 15	GERMAN MILLET	40 LBS/AC
AUG 15 - DEC 30	RYE (GRAIN)	120 LBS/AC

SOIL AMENDMENTS
FOLLOW RECOMMENDATIONS OF SOIL TESTS OR APPLY 2,000 LB/AC GROUND AGRICULTURE LIMESTONE AND 750 LB/AC 10-10-10 FERTILIZER (FROM AUG 15 - DEC 30, INCREASE 10-10-10 FERTILIZER TO 1000 LB/AC).

MULCH
APPLY 4000 LB/AC STRAW. ANCHOR STRAW BY TACKING WITH ASPHALT, NETTING, OR A MULCH ANCHORING TOOL. A DISK WITH BLADES SET NEARLY STRAIGHT CAN BE USED AS A MULCH ANCHORING TOOL.

MAINTENANCE
JAN 1 - AUG 15: REFERTILIZE IF GROWTH IS NOT FULLY ADEQUATE. RESEED, REFERTILIZE, AND MULCH IMMEDIATELY FOLLOWING EROSION OR OTHER DAMAGE.

AUG 15 - DEC 30: REPAIR AND REFERTILIZE DAMAGED AREAS IMMEDIATELY. TOP DRESS WITH 50 LB/AC OF NITROGEN IN MARCH. IF IT IS NECESSARY TO EXTEND TEMPORARY COVER BEYOND JUNE 15, OVERSEED WITH 50 LB/AC KOBE LESPEDEZA IN LATE FEBRUARY OR EARLY MARCH.

NOTE: USE THE TEMPORARY SEEDING SCHEDULE ONLY WHEN DATE IS NOT CORRECT TO USE THE PERMANENT SEEDING SCHEDULE.

PERMANENT SEEDING SCHEDULE (DAM EMBANKMENTS)

SEEDING DATE	SEEDING MIXTURE OPTIONS (CHOOSE ONE)	APPLICATION RATE
MAY 1 - AUG 31	CENTIPEDE RAW	30 LBS/AC
APRIL 1 - SEPT 1	SUMMER MIX (80% HULLED BERMUDA/20% MILLET)	200 LBS/AC
OCT 1 - MARCH 1	FALL MIX (80% TALL FESCUE/20% ANNUAL RYEGRASS)	200 LBS/AC

SOIL AMENDMENTS
FOLLOW RECOMMENDATIONS OF SOIL TESTS OR APPLY 4,000 LB/AC GROUND AGRICULTURE LIMESTONE AND 1000 LB/AC 10-10-10 FERTILIZER.

MULCH
APPLY 4000 LB/AC STRAW. ANCHOR STRAW BY TACKING WITH ASPHALT, NETTING, OR A MULCH ANCHORING TOOL. A DISK WITH BLADES SET NEARLY STRAIGHT CAN BE USED AS A MULCH ANCHORING TOOL.

MAINTENANCE
INSPECT AND REPAIR MULCH FREQUENTLY. REFERTILIZE IN LATE WINTER OF THE FOLLOWING YEAR; USE SOIL TESTS OR APPLY 150 LB/AC 10-10-10 FERTILIZER. MOW REGULARLY TO A HEIGHT OF 2-4 INCHES.

NOTE: PERMANENT SEEDING SCHEDULE IS FOR SLOPES OF THE BASIN AND TOP OF BERM.

PLANTING INSTRUCTIONS

PLANTING TECHNIQUES
A. ENSURE THAT ROOTS, ONCE REMOVED FROM POT, ARE STRAIGHTENED AND FACE DOWNWARD.
B. CREATE PLANTING AREA FOR EACH PLANT AND EXCAVATE PIT.
C. PLACE PLANTS IN PIT, ENSURING ROOTS ARE FACING COMPLETELY DOWNWARD.
D. HEEL IN SOIL AROUND PLANT AND PROCEED TO NEXT PLANTING LOCATION.
E. NEWLY PLANTED PLANTS NEED TO BE FASTENED TO THE SUBSTRATE FOR THE ESTABLISHMENT OF NEW ROOTS.
F. ROOTS SHALL BE SPREAD IN THEIR NORMAL POSITION. ALL BROKEN OR FRAYED ROOTS SHALL BE CUT OFF CLEANLY.
G. THE DIAMETER OF THE PITS FOR ALL VEGETATIVE STOCK SHALL BE AT LEAST THREE TIMES THE DIAMETER OF THE ROOT MASS. PLANT PIT WALL SHALL BE SCARIFIED PRIOR TO PLANT INSTALLATION.
H. SET THE PLANTS UPRIGHT, IN THE CENTER OF THE PIT. THE BOTTOM OF THE ROOT MASS SHOULD BE RESTING ON UNDISTURBED SOIL.
I. PLACE THE BACKFILL AROUND THE BASE AND SIDES OF THE ROOT MASS, AND WORK EACH LAYER TO SETTLE BACKFILL AND TO ELIMINATE VOIDS AND AIR POCKETS. WHEN PIT IS APPROXIMATELY 2/3 FULL, WATER THOROUGHLY BEFORE PLACING REMAINDER OF THE BACKFILL. WATER AGAIN AFTER PLACING FINAL LAYER OF BACKFILL.
J. BROKEN OR DAMAGED PARTS WILL BE CUT BACK TO UNDAMAGED TISSUE, LEAVING AS MUCH GREEN BASAL TISSUE AS POSSIBLE ABOVE THE ROOTS. IF MORE THAN FIFTY PERCENT (50%) OF THE PLANT IS DAMAGED THEN CONTRACTOR SHALL REPLACE THE PLANT.

CONTAINER STOCK / BARE ROOT
A. STOCK SHALL HAVE BEEN GROWN IN A CONTAINER LONG ENOUGH FOR THE ROOT SYSTEM TO HAVE DEVELOPED SUFFICIENTLY TO HOLD ITS SOIL TOGETHER ONCE REMOVED FROM THE CONTAINER.
B. CONTAINER PLANTS WILL NEED TO BE WATERED REGULARLY AND PLACED IN SHADY CONDITIONS UNTIL PLANTING OCCURS.
C. BARE ROOT PLANTS ARE FOR IMMEDIATE PLANTING, OTHERWISE SEE D) BELOW.
D. IF BARE ROOTS SPECIMENS ARE NOT TO BE PLANTED WITHIN FOUR (4) DAYS, TEMPORARY HOLDING OF BARE ROOT SPECIMENS ARE TO BE COVERED ENTIRELY BY A SUITABLE MEDIUM (ETC. SOIL, SAWDUST, MULCH OR THE LIKE) AND WATERED REGULARLY SO AS TO NOT DRY OUT.

PLANT LOCATIONS
A. NEW PLANTINGS SHALL BE LOCATED WHERE SHOWN ON PLAN EXCEPT WHERE CHANGES HAVE BEEN MADE IN PROPOSED CONSTRUCTION.
B. NECESSARY ADJUSTMENTS SHALL BE MADE ONLY AFTER APPROVAL BY THE OWNER OR THE OWNER'S REPRESENTATIVE.

WATER
WATER SHALL BE POTABLE AND SHALL NOT CONTAIN ELEMENTS TOXIC TO PLANT LIFE.

PLANTING SCHEDULE

1. ONCE THE GRADING IS COMPLETE, THE CONTRACTOR SHALL REQUEST AN ON-SITE INSPECTION AND AN AS-BUILT SURVEY PRIOR TO INSTALLATION OF THE STORMWATER MANAGEMENT FACILITY PLANTS. IF THE CONTRACTOR PLANTS THE PROPOSED VEGETATION PRIOR TO AN AS-BUILT SURVEY (AND SUBSEQUENT APPROVAL), ANY CHANGES TO THE GRADING / RE-PLANTING OF PLANTS WILL BE AT THE CONTRACTOR'S EXPENSE.
2. ONCE THE ENGINEER HAS APPROVED THE AS-BUILT GRADING, THE CONTRACTOR SHALL PLANT THE PROPOSED STORMWATER MANAGEMENT FACILITY PLANTS SHOWN ON THE LANDSCAPE PLAN FOR THE FACILITY. AFTER COMPLETION OF THE PLANTING, THE LANDSCAPE CONTRACTOR SHALL PROVIDE A LETTER TO THE ENGINEER CERTIFYING THAT THE PLANTS HAVE BEEN INSTALLED PER THE APPROVED STORMWATER MANAGEMENT FACILITY PLANTING PLAN.
3. OPTIMAL PLANTING PERIODS RANGE APPROXIMATELY FROM APRIL 15TH THRU JUNE 30TH AND SEPTEMBER 15T THRU OCTOBER 31ST. FOR FINAL DETERMINATION OF THE SITE'S PLANTING PERIOD, THE CONTRACTOR SHALL COORDINATE WITH A LANDSCAPE PROFESSIONAL REGARDING SCHEDULING FOR PLANT INSTALLATION.
4. IT IS RECOMMENDED THAT THE CONTRACTOR TAKE MEASURES TO PREVENT WILDLIFE FROM DAMAGING OR CONSUMING WETLAND PLANTINGS.

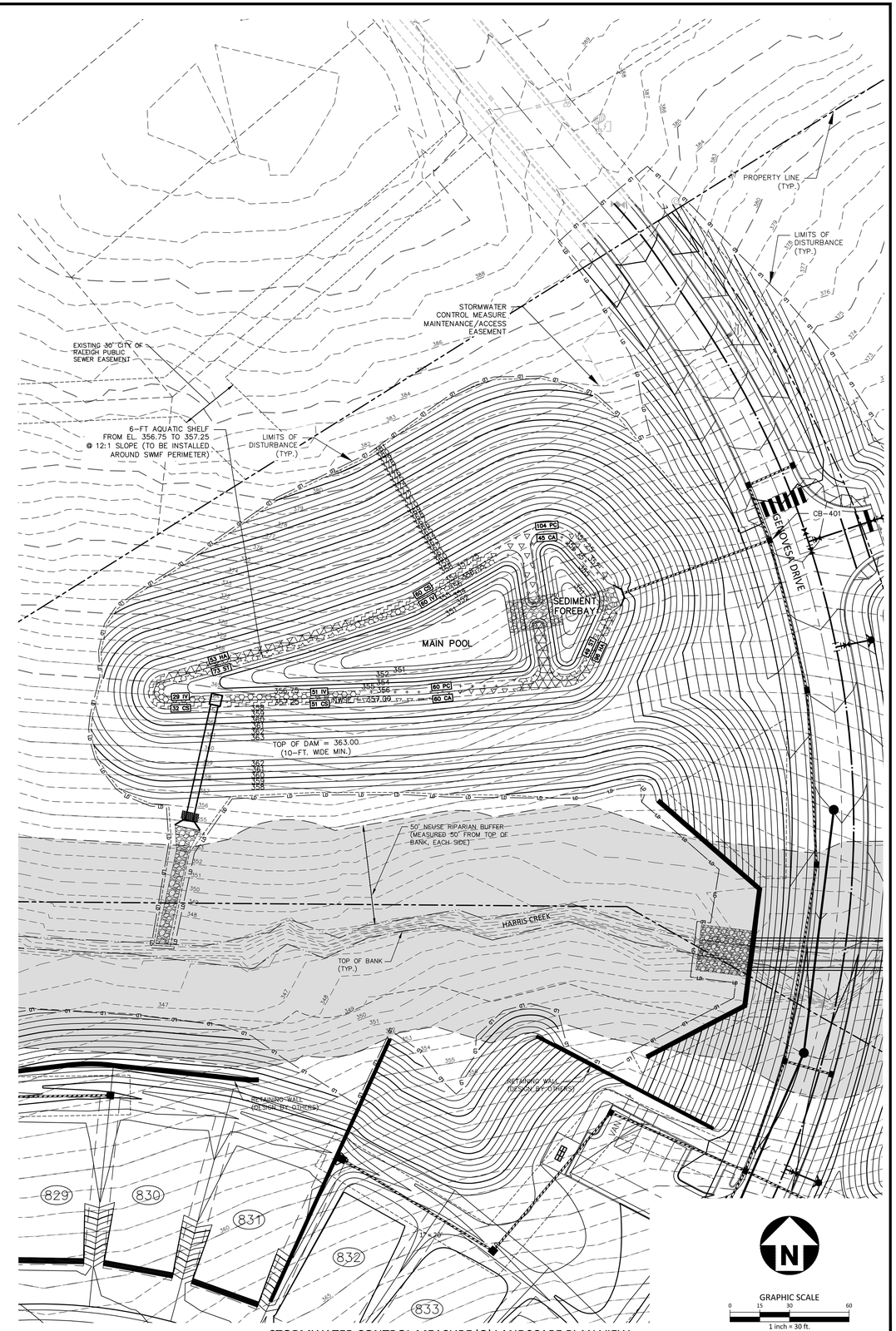

STORMWATER CONTROL MEASURE 'O' LANDSCAPE PLAN VIEW
1" = 30'

FINAL DRAWING - NOT RELEASED FOR CONSTRUCTION

McADAMS
The John R. McAdams Company, Inc.
2905 Meridian Parkway
Durham, NC 27713

phone 919. 361. 5000
fax 919. 361. 2269
license number: C-0293, C-187

www.mcadamsco.com

CLIENT

ASHTON WOODS
5711 SIX FORKS ROAD, SUITE 300
RALEIGH, NORTH CAROLINA 27609

ASHTON WOODS

THE POINT
PHASES 11-13
CONSTRUCTION DRAWINGS
EAST YOUNG STREET
TOWN OF ROLESVILLE, WAKE FOREST TOWNSHIP, WAKE COUNTY, NORTH CAROLINA

CD XX-XX

NORTH CAROLINA PROFESSIONAL SEAL 47257 ENGINEER CATHERINE E. GARCIA
PRELIMINARY NOT FOR CONSTRUCTION

REVISIONS

NO. DATE

PLAN INFORMATION

PROJECT NO.	AWH-20000
FILENAME	AWH20000 - SCM O
CHECKED BY	KEG
DRAWN BY	SDD
SCALE	1" = 30'
DATE	10. 27. 2022

SHEET

STORMWATER CONTROL MEASURE 'O' LANDSCAPE PLAN

C9.11

M:\Projects\AWH\AWH-20000\04-Production\Water Resources\North Site\Current Drawings\AWH20000 - SCM O.dwg, 10/27/2022 1:19:51 PM, Alex Thierer