©2016 BASS, NIXON & KENNEDY, INC. EXPRESSLY RESERVES ITS COMMON LAW COPYRIGHT AND OTHER PROPERTY RIGHTS IN THESE PLANS. THESE PLANS ARE NOT TO BE REPRODUCED, CHANGED OR COPIED IN ANY FORM OR MANNER WHATSOEVER, NOR ARE THEY TO BE ASSIGNED TO ANY THIRD PARTY WITHOUT FIRST OBTAINING THE EXPRESSED WRITTEN PERMISSION AND CONSENT OF BASS, NIXON & KENNEDY, INC.

ALL CONSTRUCTION SHALL BE IN ACCORDANCE WITH CURRENT TOWN OF ROLESVILLE STANDARDS AND SPECIFICATIONS

COBBLESTONE VILLAGE
MIXED USE DEVELOPMENT

TOWN OF ROLESVILLE, WAKE COUNTY, NORTH CAROLINA

CONSTRUCTION DRAWINGS
TOWN OF ROLESVILLE PROJECT NO.
SITE PLAN APPLICATION NO. CUP-SB-21-01
CASE NO. SP21-01

SYMBOLS AND ABBREVIATIONS

ABC	AGGREGATE BASE COURSE
ALUM	ALUMINUM
AST2	ALUMINIZED STEEL – TYPE 2
B–B	BACK TO BACK
BOA	BLOW–OFF ASSEMBLY
C&G	CURB AND GUTTER
CFS	CUBIC FEET PER SECOND
CI	CURB INLET
CL	CENTER LINE
CMP	CORRUGATED METAL PIPE
CO	CLEAN OUT
COM	COMMUNICATION
CONC	CONCRETE
DCV	DOUBLE CHECK VALVE
DDCV	DOUBLE DETECTOR CHECK VALVE
DI	DROP INLET
DIP	DUCTILE IRON PIPE
EASE	EASEMENT
ELEC	ELECTRIC
EX	EXISTING
FES	FLARED END SECTION
FH	FIRE HYDRANT
FM	FORCE MAIN
FT	FEET
FT/SEC	FEET PER SEC
GALV	GALVANIZED
GV	GATE VALVE
HDPE	HIGH DENSITY POLYETHYLENE
L	LENGTH
LF	LINEAR FEET
MH	MANHOLE
PAVE	PAVEMENT
PE	FINISHED PAD ELEVATION
PP	POWER POLE
PVC	POLYVINYL CHLORIDE
R	RADIUS
R/W	RIGHT–OF–WAY
RED	REDUCER
RCP	REINFORCED CONCRETE PIPE
RPZ	REDUCED PRESSURE ZONE
SS	SANITARY SEWER
STA	STATION
TDD	TEMPORARY DIVERSION DITCH
TELE	TELEPHONE
TSB	TEMPORARY SEDIMENT BASIN
UG	UNDERGROUND
WCR	WHEELCHAIR RAMP
W/L	WATER LINE
WM	WATER METER
YI	YARD INLET

EXISTING CURB INLET
EXISTING GRATE INLET/YARD INLET
EXISTING FLARED END SECTION
EXISTING FIRE HYDRANT
EXISTING BLOW–OFF ASSEMBLY
EXISTING GATE VALVE
EXISTING REDUCER
EXISTING WATER METER
EXISTING SAN SEWER MANHOLE
EXISTING CLEAN OUT
EXISTING POWER POLE
EXISTING TELEPHONE PEDESTAL
EXISTING AREA LIGHT
EXISTING SIGN
NEW CURB INLET
NEW GRATE INLET/YARD INLET
NEW FLARED END SECTION
NEW FIRE HYDRANT
NEW BLOW–OFF ASSEMBLY
NEW GATE VALVE
NEW REDUCER
NEW WATER METER
NEW TEE
NEW PLUG
NEW MANHOLE
NEW CLEAN OUT
NEW SIGN
IRON PIPE
BENCHMARK
TEMP SILT FENCE
TPF — TEMP TREE PROTECTION FENCE
TPF — TEMP COMBINATION SILT/TREE PROTECTION FENCE
TEMP DIVERSION DITCH
DISTURBED LIMITS
STREAM
G — *EXISTING GAS LINE*
COM — *EXISTING COMMUNICATIONS LINE*
T — *EXISTING UNDERGROUND TELEPHONE*
E — *EXISTING UNDERGROUND ELECTRIC*
OHE — *EXISTING OVERHEAD ELECTRIC*
W — *EXISTING WATER LINE*
FM — *EXISTING SANITARY SEWER FORCE MAIN*
SS — *EXISTING SANITARY SEWER*
EXISTING STORM DRAINAGE
NEW STORM DRAINAGE
NEW WATER LINE
NEW SANITARY SEWER
FM — NEW SANITARY SEWER FORCE MAIN
G — NEW GAS MAIN
HANDICAPPED ACCESSIBLE ROUTE

NOTE: ALL CONSTRUCTION ACTIVITY MUST BE IN ACCORDANCE WITH THE ACCEPTED POLICIES OF THE TOWN OF ROLESVILLE AND NCDOT

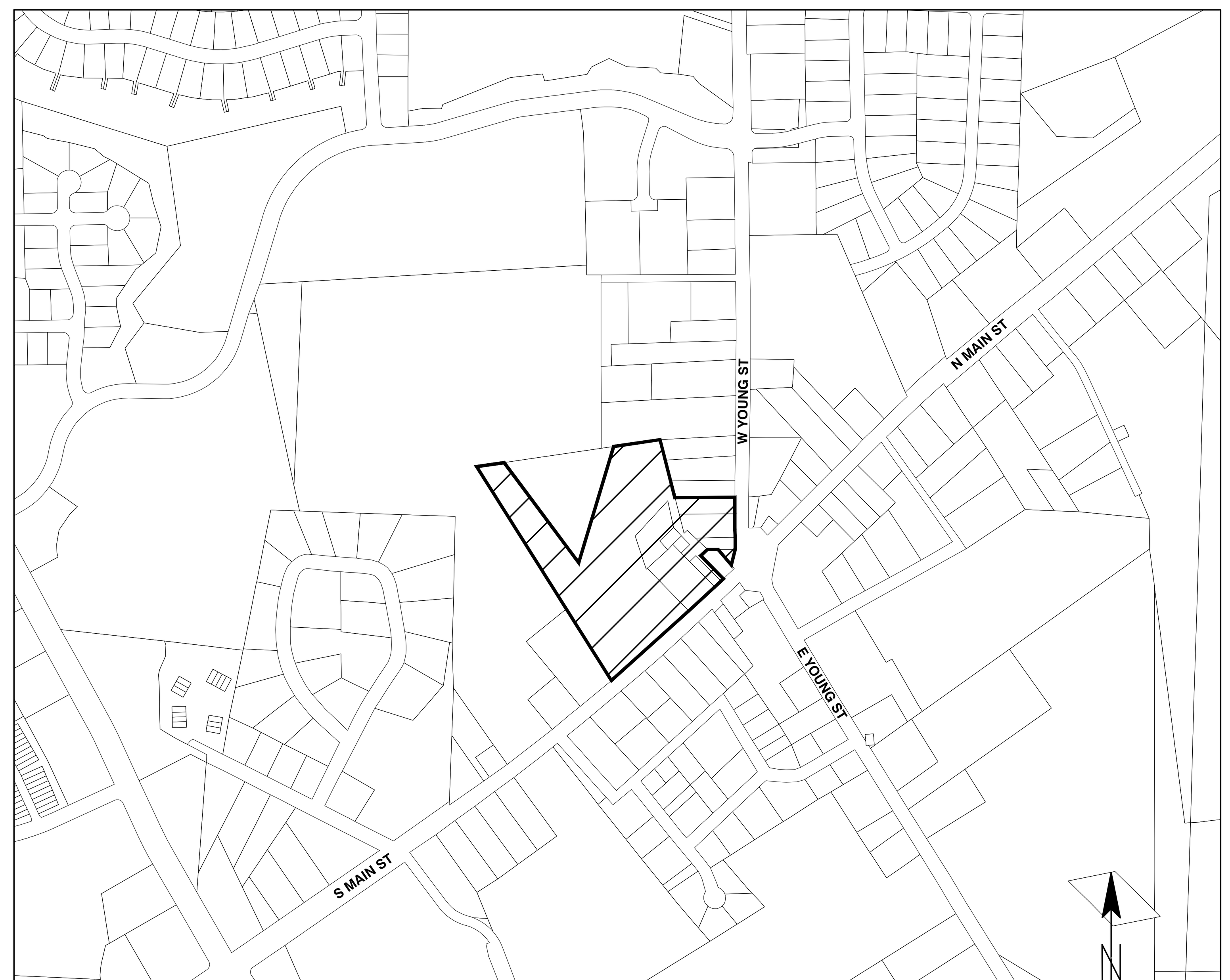

VICINITY MAP
N.T.S.

Public
Water Distribution / Extension System
The City of Raleigh consents to the connection and extension of the City's public water system as shown on this plan. The material and Construction methods used for this project shall conform to the standards and specifications of the City's Public Utilities Handbook.
City of Raleigh Public Utilities Department Permit # W-3879
Authorization to Construct See digital signature

Private
Sewer Collection / Extension System
The City of Raleigh consents to the connection to its public sewer system and extension of the private sewer collection system as shown on this plan. The material and constructions methods used for this project shall conform to the standards and specifications of the City's Public Utilities Handbook.
City of Raleigh Public Utilities Department Permit # S-4962 (P)
Authorization to Construct See digital signature

SITE PERMITTING APPROVAL

Water and Sewer Permits (If applicable)

The City of Raleigh consents to the connection and extension of the City's **Public Sewer System** as shown on this plan. The material and Construction methods used for this project shall conform to the standards and specifications of the City's Public Utilities Handbook. **City of Raleigh Public Utilities Department Permit #** W-3879

The City of Raleigh consents to the connection and extension of the City's **Public Water System** as shown on this plan. The material and Construction methods used for this project shall conform to the standards and specifications of the City's Public Utilities Handbook. **City of Raleigh Public Utilities Department Permit #** S-4962 (P)

The City of Raleigh consents to the connection to its public sewer system and extension of the **private sewer collection** system as shown on this plan. The material and constructions methods used for this project shall conform to the standards and specifications of the City's Public Utilities Handbook.

City of Raleigh Public Utilities Department Permit # ______________

CITY OF RALEIGH - PLANS AUTHORIZED FOR CONSTRUCTION

Electronic Approval: This approval is being issued electronically. This approval is valid only upon the signature of a City of Raleigh Review Officer below. The City will retain a copy of the approved plans. Any work authorized by this approval must proceed in accordance with the plans kept on file with the City. This electronic approval may not be edited once issued. Any modification to this approval once issued will invalidate this approval.

City of Raleigh Development Approval ______________________________

Raleigh Water Review Officer

SHEET INDEX

	COVER
C0.1	EXISTING CONDITIONS & DEMOLITION PLAN
C1.1	SITE PLAN
C1.2	OPEN SPACE PLAN
C2.1	UTILITY PLAN
C3.1	GRADING AND DRAINAGE PLAN
C3.2	BMP DETAILS
C3.3	EROSION CONTROL PLAN - STAGE 1
C3.4	EROSION CONTROL PLAN - STAGE 2
C3.5	EROSION CONTROL DETAILS
C3.6	EROSION CONTROL DETAILS
C3.7	NCG01 PLAN
C3.8	STORM DRAINAGE PIPE & STRUCTURE TABLE
C4.1	PUBLIC WATERLINE PROFILE
C4.2	SANITARY SEWER PROFILE
C4.3	S. MAIN ST. - U.S. 401 WIDENING CROSS SECTIONS
L1.1	LANDSCAPE PLAN
L1.2	LANDSCAPE DETAILS
SL-101	LIGHTING PLAN
C5.1	DETAILS
C5.2	DETAILS
C5.3	DETAILS
C5.4	DETAILS
C5.5	DETAILS
C5.6	DETAILS

#1 Storm calculations (10/25yr) and drainage area maps (pre/post/inlet) will be needed prior to approval. With out engineering is not able to complete the review

OWNER:

TOWN OF ROLESVILLE
P.O. BOX 250
ROLESVILLE, NC 27571-0250

DEVELOPER:

KDM DEVELOPMENT CORPORATION
1080 PITTSFORD VICTOR RD, STE 202
PITTSFORD NY 14534-3805

CONTACT: KENYON BURHNAM
PHONE: 585-465-0099
EMAIL: KBURNHA2@U.ROCHESTER.EDU

CONSTRUCTION NOTES

1. ALL CONSTRUCTION SHALL BE IN ACCORDANCE WITH APPLICABLE MUNICIPALITY STANDARDS, SPECIFICATIONS, AND DETAILS. WORK IN THIS PROJECT SHALL ALSO CONFORM TO THESE PLANS, THE LATEST EDITIONS OF THE NORTH CAROLINA DEPARTMENT OF TRANSPORTATION (NCDOT) ROAD AND BRIDGE SPECIFICATIONS, THE ROAD AND BRIDGE STANDARDS, THE NORTH CAROLINA EROSION AND SEDIMENT CONTROL HANDBOOK, THE NORTH CAROLINA EROSION AND SEDIMENT CONTROL REGULATIONS, THE FINAL GEOTECHNICAL REPORT, AND GENERAL DESIGN STANDARDS. IN THE EVENT OF CONFLICT BETWEEN ANY OF THESE STANDARDS, SPECIFICATIONS, OR PLANS, THE MOST STRINGENT SHALL GOVERN.
2. THE CONTRACTOR SHALL BE SOLELY RESPONSIBLE FOR TRENCH SAFETY DURING ALL PHASES OF CONSTRUCTION.
3. THE LOCATION AND SIZE OF EXISTING UTILITIES AS SHOWN IS APPROXIMATE ONLY. THE CONTRACTOR IS RESPONSIBLE FOR HORIZONTALLY AND VERTICALLY LOCATING AND PROTECTING ALL PUBLIC OR PRIVATE UTILITIES WHICH LIE IN OR ADJACENT TO THE CONSTRUCTION SITE. AT LEAST 48 HOURS PRIOR TO ANY DEMOLITION, GRADING, OR CONSTRUCTION ACTIVITY, THE CONTRACTOR SHALL NOTIFY THE NORTH CAROLINA ONE–CALL UTILITIES LOCATION SERVICE (ULOCO) AT 1–800–632–4949 FOR PROPER IDENTIFICATION OF EXISTING UTILITIES WITHIN THE SITE.
4. THE CONTRACTOR SHALL SALVAGE AND PROTECT ALL EXISTING POWER POLES, SIGNS, MANHOLES, TELEPHONE RISERS, WATER VALVES, ETC. DURING ALL CONSTRUCTION PHASES. THE CONTRACTOR SHALL REPAIR, AT HIS OWN EXPENSE, ANY EXISTING UTILITIES DAMAGED DURING CONSTRUCTION.
5. TRAFFIC CONTROL ON PUBLIC STREETS SHALL BE IN CONFORMANCE WITH THE TRAFFIC CONTROL PLAN, THE "MANUAL OF UNIFORM TRAFFIC CONTROL DEVICES," AND AS FURTHER DIRECTED BY CITY AND STATE INSPECTORS.
6. ANY DISCREPANCIES FOUND BETWEEN THE DRAWINGS AND SPECIFICATIONS AND SITE CONDITIONS OR ANY INCONSISTENCIES OR AMBIGUITIES IN DRAWINGS OR SPECIFICATIONS SHALL BE IMMEDIATELY REPORTED TO THE ENGINEER, IN WRITING, WHO SHALL PROMPTLY ADDRESS SUCH INCONSISTENCIES OR AMBIGUITIES. WORK DONE BY THE CONTRACTOR AFTER HIS DISCOVERY OF SUCH DISCREPANCIES, INCONSISTENCIES, OR AMBIGUITIES SHALL BE DONE AT THE CONTRACTOR'S RISK.
7. A PRE–CONSTRUCTION CONFERENCE SHALL BE HELD PRIOR TO THE START OF CONSTRUCTION. THE CONTRACTOR SHALL ARRANGE THE MEETING WITH THE CITY ENGINEERING DIVISION.
8. CONTRACTOR IS RESPONSIBLE FOR VERIFYING ALL REQUIRED PERMITS AND APPROVALS PRIOR TO COMMENCING CONSTRUCTION.
9. ALL AREAS SHALL BE GRADED FOR POSITIVE DRAINAGE, AND AS SHOWN ON THESE PLANS. THE CONTRACTOR SHALL MAINTAIN ADEQUATE SITE DRAINAGE DURING ALL PHASES OF CONSTRUCTION. THE CONTRACTOR SHALL USE SILT FENCES (OR OTHER METHODS APPROVED BY THE ENGINEER AND APPLICABLE MUNICIPALITY) AS REQUIRED TO PREVENT SILT AND CONSTRUCTION DEBRIS FROM FLOWING ONTO ADJACENT PROPERTIES. CONTRACTOR SHALL COMPLY WITH ALL APPLICABLE FEDERAL, STATE, OR LOCAL EROSION, CONSERVATION, AND SILTATION ORDINANCES. CONTRACTOR SHALL REMOVE ALL TEMPORARY EROSION CONTROL DEVICES UPON COMPLETION OF PERMANENT DRAINAGE FACILITIES AND THE ESTABLISHMENT OF A STAND OF GRASS OR OTHER GROWTH TO PREVENT EROSION.
10. THE CONTRACTOR SHALL CLEAR AND GRUB THE SITE AND PLACE, COMPACT, AND MOISTURE CONDITION ALL FILL PER THE PROJECT GEOTECHNICAL ENGINEER'S SPECIFICATIONS. THE FILL MATERIAL TO BE USED SHALL BE APPROVED BY THE GEOTECHNICAL ENGINEER PRIOR TO PLACEMENT.
11. MATERIALS USED TO CONSTRUCT EMBANKMENTS FOR ANY PURPOSE, BACKFILL AROUND DRAINAGE STRUCTURES, OR IN UTILITY TRENCHES FOR ANY OTHER DEPRESSION REQUIRING FILL OR BACKFILL SHALL BE COMPACTED TO 95% OF MAXIMUM DENSITY AS DETERMINED BY THE STANDARD PROCTOR TEST AS SET OUT IN ASTM STANDARD D698. STONE BACKFILL SHALL BE COMPACTED TO 95% MAXIMUM DENSITY AS DETERMINED BY THE MODIFIED PROCTOR TEST AS SET OUT IN ASTM STANDARD D1557. THE CONTRACTOR SHALL, PRIOR TO ANY OPERATIONS INVOLVING FILLING OR BACKFILLING, SUBMIT THE RESULTS OF THE PROCTOR TEST TOGETHER WITH A CERTIFICATION THAT THE SOIL TESTED IS REPRESENTATIVE OF THE MATERIALS TO BE USED ON THE PROJECT. TESTS SHALL BE CONDUCTED BY A CERTIFIED MATERIALS TESTING LABORATORY AND THE CERTIFICATIONS MADE BY A LICENSED PROFESSIONAL ENGINEER REPRESENTING THE LABORATORY.
12. PROPOSED CONTOURS AND GUTTER GRADIENTS ARE APPROXIMATE. PROPOSED SPOT ELEVATIONS AND ROADWAY PROFILES/SUPERELEVATIONS ARE TO BE USED IN CASE OF DISCREPANCY.
13. THE CONTRACTOR SHALL REVIEW, VERIFY AND COORDINATE ALL DIMENSIONS SHOWN ON PLANS, INCLUDING THE HORIZONTAL AND VERTICAL LOCATION OF CURB INLETS AND GRATE INLETS AND ALL UTILITIES CROSSING THE STORM SEWER PRIOR TO STARTING PROJECT.
14. ALL CURB JOINTS SHALL EXTEND THROUGH THE CURB. MINIMUM LENGTH OF OFFSET JOINTS AT RADIUS POINTS IS 1.5 FEET. ALL JOINTS SHALL BE SEALED WITH JOINT SEALANT.
15. ALL HANDICAP RAMPING, STRIPING, AND PAVEMENT MARKINGS SHALL CONFORM TO ADA REQUIREMENTS AND THE "NORTH CAROLINA STATE BUILDING CODE, VOL. 1–C ACCESSIBILITY CODE.
16. OWNER SHALL PROVIDE FENCING AND OTHER SAFETY MEASURES NECESSARY IN AND AROUND ANY PROPOSED STORMWATER MANAGEMENT MEASURES (PONDS, WETLANDS, ETC.) OBTAINING PROPER PERMITS SHALL BE THE RESPONSIBILITY OF THE OWNER.
17. RETAINING WALLS EXCEEDING 30 INCHES IN HEIGHT SHALL INCLUDE FALL PROTECTION IN THE FORM OF A HANDRAIL OR FENCING ON THE HIGH SIDE OF THE RETAINING WALL.
18. PROPER COMPACTION OF ALL FILL SOILS PLACED ON SITE SHALL BE THE RESPONSIBILITY OF THE CONTRACTOR. COMPACTION SHALL BE ADEQUATE TO SUPPORT THE PROPOSED USE OF AREAS IN WHICH FILL SOILS ARE PLACED. THE CONTRACTOR SHALL HIRE A GEOTECHNICAL ENGINEER TO TEST AND VERIFY THAT COMPACTION IS ADEQUATE FOR THE PROPOSED USE OF IN THE AREA OF FILL PLACEMENT.
19. ALL ASPECTS OF THIS PROJECT SHALL BE IN FULL COMPLIANCE WITH CURRENT ADA STANDARDS. IF THE CONTRACTOR NOTES ANY ASPECTS OF THE PROJECT WHICH ARE NOT IN COMPLIANCE, THE ENGINEER SHALL BE NOTIFIED PRIOR TO ANY FURTHER WORK BEING PERFORMED. ANY WORK PERFORMED AFTER THE CONTRACTOR NOTES SUCH A NON COMPLIANCE IS SUBJECT TO REMOVAL AND REPAIR AT THE CONTRACTOR'S EXPENSE.
20. THE CONTRACTOR OR OWNER SHALL EMPLOY A GEOTECHNICAL ENGINEER TO TEST ALL EMBANKMENTS AND FILL PLACEMENT FOR PROPER COMPACTION. PROPER COMPACTION SHALL BE PER THE GEOTECHNICAL ENGINEER'S RECOMMENDATIONS OR THESE PLANS, WHICHEVER IS MORE STRINGENT. EMBANKMENTS FOR PONDS SHALL BE PLACED IN 6 INCH LOOSE LAYERS AND SHALL BE COMPACTED TO A DENSITY OF NO LESS THAN 95% OF THE STANDARD PROCTOR MAXIMUM DENSITY AT A MOISTURE CONTENT OF + OR – TWO PERCENTAGE POINTS OF THE OPTIMUM MOISTURE CONTENT IN ACCORDANCE WITH ASTM D698. THE CONTRACTOR SHALL TAKE PHOTOGRAPHS OF THE OUTLET STRUCTURE AT ALL AT ALL PHASES OF INSTALLATION AND SHALL RETAIN WITH GEOTECHNICAL TESTING DATA. THE CONTRACTOR SHALL ALSO RETAIN ALL SHIPPING RECORDS AND SPECIFICATIONS FOR THE OUTLET STRUCTURE MATERIALS AND STRUCTURES. ALL OF THE ABOVE DATA MAY BE REQUIRED AS PART OF THE MUNICIPALITY AS–BUILT PROCESS AND SHALL BE MADE AVAILABLE TO THE ENGINEER UPON REQUEST. THE CONTRACTOR AND OWNER SHALL HAVE DOCUMENTATION OF THESE TESTS AVAILABLE UPON REQUEST.
21. RETAINING WALLS SHOWN HEREIN SHALL BE DESIGNED BY A QUALIFIED PROFESSIONAL ENGINEER WITH EXPERIENCE DESIGNING RETAINING WALLS. AT LEAST 14 DAYS PRIOR TO BEGINNING CONSTRUCTION OF RETAINING WALLS, THE CONTRACTOR SHALL CONTACT THE OWNER'S GEOTECHNICAL ENGINEER TO SCHEDULE AND COORDINATE ALL APPROPRIATE INSPECTIONS, TESTING, AND VERIFICATION NECESSARY DURING RETAINING WALL CONSTRUCTION. THE GEOTECHNICAL ENGINEER SHALL PROVIDE CONTINUOUS INSPECTION, TESTING AND VERIFICATION FOR THE DURATION OF RETAINING WALL CONSTRUCTION. PROPER SCHEDULING, EXECUTION, AND RECORD KEEPING FOR ALL REQUIRED INSPECTIONS, TESTING, AND VERIFICATION SHALL BE THE RESPONSIBILITY OF THE CONTRACTOR. SUCH RECORDS SHALL BE RETAINED AND SHALL BE PROVIDED TO THE OWNER AND BASS, NIXON & KENNEDY, INC. ALL MONITORING, TESTING, AND VERIFICATION SHALL CONFORM TO THE MOST RECENT VERSION OF THE NC BUILDING CODE CHAPTER 18, SECTION 1806 OR THE WALL DESIGN ENGINEER'S SPECIFICATIONS, WHICHEVER IS MORE STRINGENT.

ALL CONSTRUCTION MUST CONFORM TO THE UNDERGROUND UTILITY PROTECTION ACT
BEFORE YOU DIG!
CONTACT ONE–CALL CENTER
1–800–632–4949

QUANTITY SUMMARY

PHASE NUMBER(S)	1
NUMBER OF LOT(S)	1
LOT NUMBER(S) BY PHASE	N/A
NUMBER OF UNITS	196
LIVABLE BUILDINGS	6
OPEN SPACE (AC)	1.92
NUMBER OF OPEN SPACE LOTS	N/A
PUBLIC WATER (LF)	875
PRIVATE SEWER (LF)	550
PUBLIC STREET (LF)	0
PUBLIC SIDEWALK (LF)	255

ENGINEER:

BNK
BASS, NIXON & KENNEDY, INC.
CONSULTING ENGINEERS
6310 CHAPEL HILL ROAD, SUITE 250
RALEIGH, NORTH CAROLINA 27607
TELEPHONE: (919) 851-4422
FAX: (919) 851-8968
CERTIFICATION NUMBERS: NCBELS (C-0110)
NCBOLA (C-0267)
CONTACT: MARTY D. BIZZELL, PE, CPESC
EMAIL: Marty.Bizzell@BNKinc.com

NORTH CAROLINA PROFESSIONAL SEAL 036908 ENGINEER MARTY D. BIZZELL
09/01/23

EROSION CONTROL, STORMWATER AND FLOODPLAIN MANAGEMENT
APPROVED
EROSION CONTROL ☐ S-__________
STORMWATER MGMT. ☐ S-__________
FLOOD STUDY ☐ S-__________
DATE__________
WAKE COUNTY NORTH CAROLINA EFFECTIVE: 08/23/17
ENVIRONMENTAL CONSULTANT SIGNATURE

TOWN OF ROLESVILLE PROJECT NO.
BASS, NIXON & KENNEDY, INC.
03-19157 COBBLESTONE VILLAGE CONSTRUCTION SUBMITTAL

©2019 BASS, NIXON & KENNEDY, INC. EXPRESSLY RESERVES ITS COMMON LAW COPYRIGHT AND OTHER PROPERTY RIGHTS IN THESE PLANS. THESE PLANS ARE NOT TO BE REPRODUCED, CHANGED OR COPIED IN ANY FORM OR MANNER WHATSOEVER, NOR ARE THEY TO BE ASSIGNED TO ANY THIRD PARTY WITHOUT FIRST OBTAINING THE EXPRESSED WRITTEN PERMISSION AND CONSENT OF BASS, NIXON & KENNEDY, INC.

CITY OF RALEIGH - PLANS AUTHORIZED FOR CONSTRUCTION

Electronic Approval: This approval is being issued electronically. This approval is valid only upon the signature of a City of Raleigh Review Officer below. The City will retain a copy of the approved plans. Any work authorized by this approval must proceed in accordance with the plans kept on file with the City. This electronic approval may not be edited once issued. Any modification to this approval once issued will invalidate this approval.

City of Raleigh Development Approval ______________________

Raleigh Water Review Officer

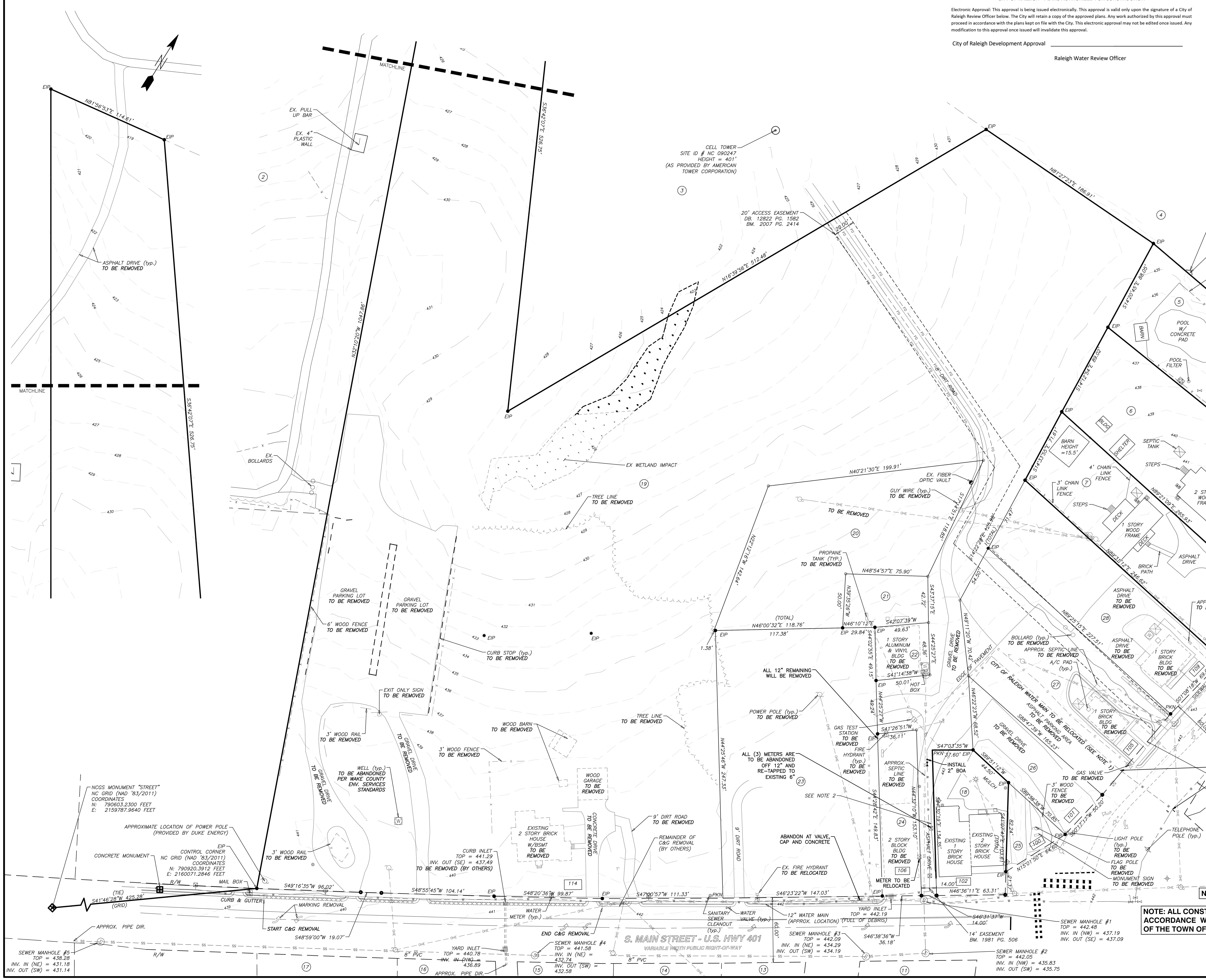

NOTE: ALL CONSTRUCTION ACTIVITY MUST BE IN ACCORDANCE WITH THE ACCEPTED POLICIES OF THE TOWN OF ROLESVILLE AND NCDOT

1	POWERS, MARK R POWERS, MARY K PIN 1759–91–8091 REID 0055852 DB 9384 PG 2517 ZONING R–1 USE SINGLE FAMILY	10	TOWN OF ROLESVILLE PIN 1769–01–7654 REID 0077362 DB 014567 PG 0741 ZONING C USE SINGLE FAMILY
2	TOWN OF ROLESVILLE PIN 1759–92–2076 REID 0069979 DB 9754 PG 1416 ZONING R–1 USE ROLESVILLE TOWN PARK	11	EDDINS FAMILY LLC PIN 1769–01–5274 REID 0035722 DB 009971 PG 02251 ZONING C USE COMMERCIAL
3	TELECOM TOWERS LLC PIN 1759–91–8780 REID 0060854 DB 12822 PG 1582 ZONING R–1 USE CELL TOWER	12	DRAGONFLY INVESTMENTS NC LLC PIN 1769–01–5157 REID 0073627 DB 017752 PG 00806 ZONING C USE COMMERCIAL
4	MAY, WILLIAM A PIN 1769–02–3002 REID 0075102 DB 16–E PG 1544 ZONING R–1 USE SINGLE FAMILY	13	KET REAL ESTATE LLC PIN 1769–01–5048 REID 0073596 DB 015925 PG 00965 ZONING R–1 USE TWOFAM
5	WILKINS, ROXEY MANGUM WILKINS, WESLEY C SR PIN 1769–01–4849 REID 0045890 DB 13684 PG 719 ZONING R–1 USE SINGLE FAMILY	14	WIGGINS, BERTIE W PIN 1769–01–4083 REID 0073786 DB 002265 PG 00405 ZONING R–1 USE SINGLE FAMILY
6	WILKINS, ROXEY MANGUM WILKINS, WESLEY C SR PIN 1769–01–4840 REID 0002959 DB 16593 PG 1043 ZONING R–1 USE SINGLE FAMILY	15	DIXON, BESSIE W PIN 1769–00–4915 REID 0073787 DB 002265 PG 00087 ZONING R–1 USE SINGLE FAMILY
7	SELF, LINDA ESTELLE MERRITT WILKINS, ROXEY M PIN 1769–01–4751 REID 0046996 DB 16423 PG 2434 ZONING R–1 USE MANUFACTURED HOME	16	WELLS, ANGELA S PIN 1769–00–3849 REID 0073785 DB 005317 PG 00189 ZONING R–1 USE SINGLE FAMILY
8	HAMILTON, ELIZABETH WILIAMS WILLIAMS, FRED J III PIN 1769–01–7801 REID 0078003 DB 18–10 PG 63 ZONING R–1 USE SINGLE FAMILY	17	COOKE, WILLIS NANCY V PIN 1769–00–2815 REID 0014688 DB 001810 PG 00563 ZONING R–1 USE SINGLE FAMILY
9	WILLIAMS, SUSIE H PIN 1769–01–6663 REID 0078000 DB 012976 PG 01157 ZONING C USE VACANT	18	PRIVETTE PROPERTIES LLC PIN 1769–00–5401 REID 0118309 DB 012763 PG 02560 ZONING C USE COMMERCIAL

PROPERTIES TO BE RECOMBINED

19	TOWN OF ROLESVILLE PIN 1769–01–0454 REID 0072561 DB 012794 PG 01827 ZONING TC USE SINGLE FAMILY	24	TOWN OF ROLESVILLE PIN 1769–01–4357 REID 00089034 DB 016566 PG 01875 ZONING TC USE SNGL TEN
20	TOWN OF ROLESVILLE PIN 1769–01–2542 REID 0009020 DB 016084 PG 02121 ZONING TC USE VACANT	25	TOWN OF ROLESVILLE PIN 1769–01–5454 REID 0002960 DB 016074 PG 01997 ZONING TC USE VACANT
21	TOWN OF ROLESVILLE PIN 1769–01–3520 REID 003740 DB 016084 PG 02121 ZONING TC USE CHURCH	26	TOWN OF ROLESVILLE PIN 1769–01–5408 REID 0008897 DB 015827 PG 00426 ZONING TC USE VACANT
22	TOWN OF ROLESVILLE PIN 1769–01–3468 REID 0036741 DB 014688 PG 00212 ZONING TC USE MUNC BLD	27	TOWN OF ROLESVILLE PIN 1769–01–4576 REID 0012576 DB 005741 PG 00921 ZONING TC USE MUNC BLD
23	TOWN OF ROLESVILLE PIN 1769–01–3355 REID 0072559 DB 014688 PG 00212 ZONING TC USE SINGLE TEN	28	TOWN OF ROLESVILLE PIN 1769–01–4654 REID 0060993 DB 016026 PG 00705 ZONING TC USE SINGL TEN

NOTES:
1. EXISTING WATER MAIN TO REMAIN ACTIVE UNTIL THE PROPOSED WATER LINE IS INSTALLED, TESTED, AND READY TO BE ACTIVE.
2. SERVICES TO EXISTING BUILDINGS TO REMAIN IN PLACE THROUGHOUT CONSTRUCTION. CONTRACTOR TO VERIFY SERVICE LOCATIONS.
3. EXISTING WELLS AND SEPTIC SYSTEMS TO BE ABANDONED PER ALL WAKE COUNTY ENVIRONMENTAL SERVICES, STANDARDS & SPECIFICATIONS.

NORTH CAROLINA PROFESSIONAL ENGINEER SEAL 036908 MARTY D. BIZZELL
09/01/23

BNK

BASS, NIXON & KENNEDY, INC.
CONSULTING ENGINEERS
6310 CHAPEL HILL ROAD, SUITE 250, RALEIGH, NC 27607
TELEPHONE: (919)851-4422 FAX: (919)851-8968
CERTIFICATION NUMBERS: NCBELS (C-0110); NCBOLA (C-0267)

NO.	DATE	DESCRIPTION	BY

REVISIONS

03-19157	PROGRESS	MRM
JOB NO.	DATE	DRAWN BY

EXISTING CONDITIONS & DEMOLITION PLAN

SCALE: 1" = 40' CHK BY: MDB

COBBLESTONE VILLAGE
MIXED USE DEVELOPMENT
TOWN OF ROLESVILLE, WAKE COUNTY, NORTH CAROLINA

SHEET C0.1

TOWN OF ROLESVILLE PROJECT NO.

NOT RELEASED FOR CONSTRUCTION OR BID SOLICITATION

©2019 BASS, NIXON & KENNEDY, INC. EXPRESSLY RESERVES ITS COMMON LAW COPYRIGHT AND OTHER PROPERTY RIGHTS IN THESE PLANS. THESE PLANS ARE NOT TO BE REPRODUCED, CHANGED OR COPIED IN ANY FORM OR MANNER WHATSOEVER, NOR ARE THEY TO BE ASSIGNED TO ANY THIRD PARTY WITHOUT FIRST OBTAINING THE EXPRESSED WRITTEN PERMISSION AND CONSENT OF BASS, NIXON & KENNEDY, INC.

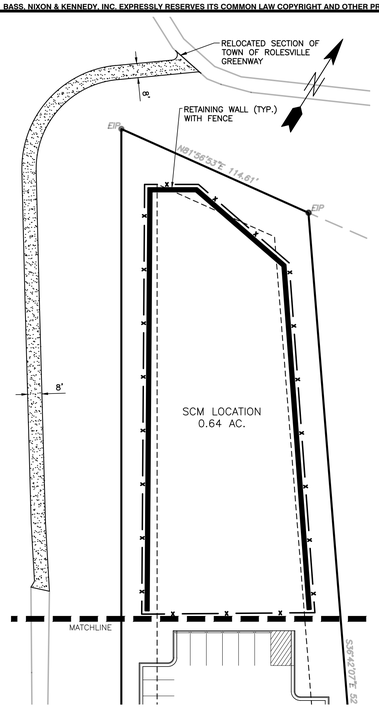

CONDITIONS OF APPROVAL:

1. TECHNICAL REVIEW COMMITTEE APPROVAL AND ISSUANCE OF REQUIRED PERMITS FROM ALL AGENCIES MUST BE ACHIEVED AND SUBMITTED FOR REVIEW AND RECORD RETENTION PRIOR TO FINAL SIGNATURE AND APPROVAL OF THE SITE PLAN.
2. CROSS-CONNECTION ACCESS TO ONE OF THE THREE ADJACENT PROPERTIES TO THE EAST ALONG W. YOUNG STREET (111, 113, AND 115 W. YOUNG STREET) FOR FUTURE DEVELOPMENT WILL BE PROVIDED.
3. BEST EFFORTS WILL BE MADE FOR GREENWAY ACCESS ACROSS THE TELECOM TOWNERS, LLC SITE FOR PEDESTRIAN TRAFFIC FROM OVERFLOW PARKING SITE LOCATED AT THE TERMINUS OF SCARBORO STREET IN MAIN STREET PARK.
4. BASED UPON TESTIMONY REGARDING SHARED PARKING IN A MIXED-USE DEVELOPMENT, A 15% PARKING REDUCTION IS GRANTED RESULTING IN 467 REQUIRED SPACES.
5. A MAXIMUM HEIGHT OF 60 FEET IS APPROVED PER THE BUILDING HEIGHT DESIGN ALTERNATIVE FOR THE SITE AS SHOWN ON THE SITE PLAN, PROVIDED ALL OTHER APPLICABLE STANDARDS ACCORDING TO THE LDO ARE MET.
6. FINAL STREET DESIGN SHALL INCORPORATE A ROUNDABOUT OR OTHER CUT-THROUGH FOR DROP-OFFS CONSISTENT WITH THE DESIGN REQUIREMENTS OF THE TOWN COMMUNITY BUILDING AS PROVIDED BY THE TOWN'S ARCHITECTURAL CONSULTANT.
7. SUP APPROVED BY BOARD OF COMMISSIONERS ON OCTOBER 5, 2021.

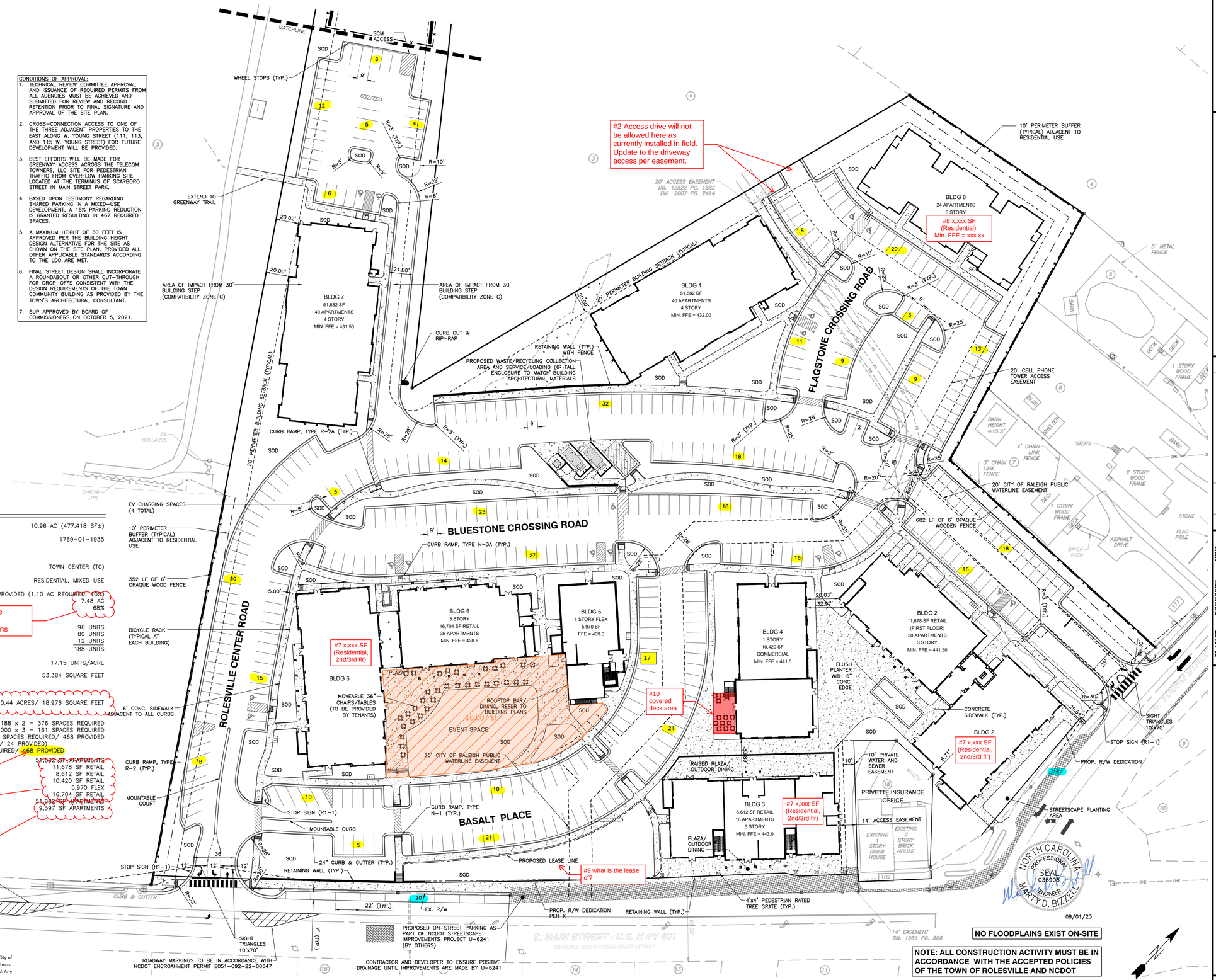

#2 Access drive will not be allowed here as currently installed in field. Update to the driveway access per easement.

#8 x,xxx SF (Residential) Min. FFE = xxx.xx

#7 x,xxx SF (Residential, 2nd/3rd flr)

#10 covered deck area

#9 what is the lease of?

OVERALL SITE DATA

SITE AREA	10.96 AC (477,418 SF±)
P.I.N.	1769-01-1935
ZONING DISTRICT:	TOWN CENTER (TC)
USE:	RESIDENTIAL, MIXED USE
OPEN SPACE AREA:	1.92 AC PROVIDED (1.10 AC REQUIRED, 10%)
IMPERVIOUS AREA:	7.48 AC
IMPERVIOUS AREA (%):	68%
APARTMENT MIX	
1 BEDROOM	96 UNITS
2 BEDROOM	80 UNITS
3 BEDROOM	12 UNITS
TOTAL APARTMENTS	188 UNITS
RESIDENTIAL DENSITY:	17.15 UNITS/ACRE
TOTAL RETAIL/COMMERCIAL:	53,384 SQUARE FEET
EVENT SPACE:	0.44 ACRES/ 18,976 SQUARE FEET

PARKING REQUIREMENTS PER TC DISTRICT DEVELOPMENT STANDARDS

MIXED USE RESDENTIAL: 2.0 SPACES PER UNIT	188 x 2 = 376 SPACES REQUIRED
MIXED USE NON-RESIDENTIAL: 3 SPACES PER 1000 GSF	53,384/1000 x 3 = 161 SPACES REQUIRED
TOTAL PARKING REQUIRED/PROVIDED:	537 SPACES REQUIRED/ 468 PROVIDED
5% OF ON STREET PARKING MAY BE COUNTED AS REQUIRED PARKING (27 ALLOWED/ 24 PROVIDED)	
15% PARKING REDUCTION ALLOWED FOR SHARED PARKING:	537 x .85 = 457 REQUIRED/ 468 PROVIDED

BUILDING 1:	51,882 SF APARTMENTS
BUILDING 2:	11,678 SF RETAIL
BUILDING 3:	8,612 SF RETAIL
BUILDING 4:	10,420 SF RETAIL
BUILDING 5:	5,970 FLEX
BUILDING 6:	16,704 SF RETAIL
BUILDING 7:	51,882 SF APARTMENTS
BUILDING 8:	9,597 SF APARTMENTS

#3 need to be updated per proposed plans

#5 add FLEX as part of total SF

#6 event space updated per proposed plans, 16,000 sf or show/provide the additional space that you are calc

#4 442 space on site 24 offsite = 466 total

#7 Bldg 2, 3, & 6 is the residential same sf as Retail? provide SF for Residential x,xxx SF (Residential, 2nd/3rd floors?)

#8 verify Bldg 8, xx sf

CITY OF RALEIGH - PLANS AUTHORIZED FOR CONSTRUCTION

Electronic Approval: This approval is being issued electronically. This approval is valid only upon the signature of a City of Raleigh Review Officer below. The City will retain a copy of the approved plans. Any work authorized by this approval must proceed in accordance with the plans kept on file with the City. This electronic approval may not be edited once issued. Any modification to this approval once issued will invalidate this approval.

City of Raleigh Development Approval _____

Raleigh Water Review Officer

NO FLOODPLAINS EXIST ON-SITE

NOTE: ALL CONSTRUCTION ACTIVITY MUST BE IN ACCORDANCE WITH THE ACCEPTED POLICIES OF THE TOWN OF ROLESVILLE AND NCDOT

NORTH CAROLINA PROFESSIONAL SEAL 036908 ENGINEER MARTY D. BIZZELL 09/01/23

TOWN OF ROLESVILLE PROJECT NO.

BNK
BASS, NIXON & KENNEDY, INC.
CONSULTING ENGINEERS
6310 CHAPEL HILL ROAD, SUITE 250, RALEIGH, NC 27607
TELEPHONE: (919)851-4422 FAX: (919)851-8968
CERTIFICATION NUMBERS: NCBELS (C-0110); NCBOLA (C-0267)

NO.	DATE	DESCRIPTION	BY
		REVISIONS	

JOB NO. 03-19157 | PROGRESS | DATE | DRAWN BY MRM | SCALE: 1" = 40' | CHK BY:MDB

SITE PLAN

COBBLESTONE VILLAGE
MIXED USE DEVELOPMENT
TOWN OF ROLESVILLE, WAKE COUNTY, NORTH CAROLINA

SHEET C1.1

NOT RELEASED FOR CONSTRUCTION OR BID SOLICITATION

©2019 BASS, NIXON & KENNEDY, INC. EXPRESSLY RESERVES ITS COMMON LAW COPYRIGHT AND OTHER PROPERTY RIGHTS IN THESE PLANS. THESE PLANS ARE NOT TO BE REPRODUCED, CHANGED OR COPIED IN ANY FORM OR MANNER WHATSOEVER, NOR ARE THEY TO BE ASSIGNED TO ANY THIRD PARTY WITHOUT FIRST OBTAINING THE EXPRESSED WRITTEN PERMISSION AND CONSENT OF BASS, NIXON & KENNEDY, INC.

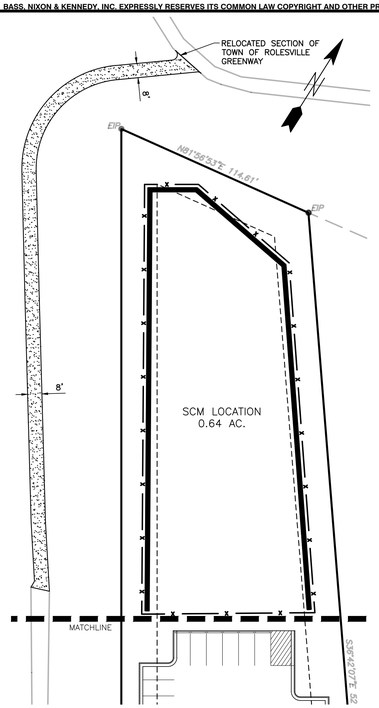

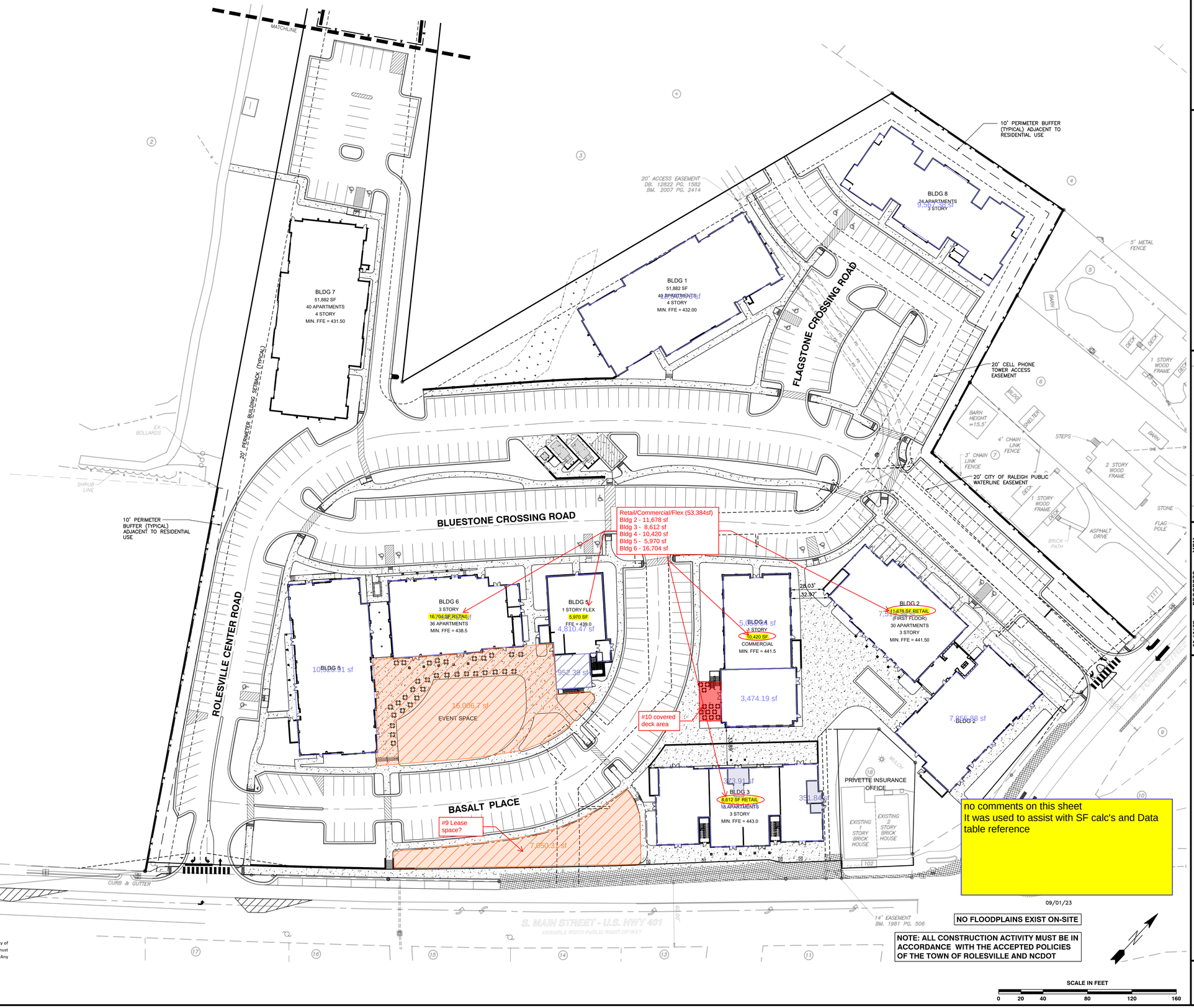

no comments on this sheet
It was used to assist with SF calc's and Data table reference

09/01/23

NO FLOODPLAINS EXIST ON-SITE

NOTE: ALL CONSTRUCTION ACTIVITY MUST BE IN ACCORDANCE WITH THE ACCEPTED POLICIES OF THE TOWN OF ROLESVILLE AND NCDOT

SCALE IN FEET
0 20 40 80 120 160

CITY OF RALEIGH - PLANS AUTHORIZED FOR CONSTRUCTION

Electronic Approval: This approval is being issued electronically. This approval is valid only upon the signature of a City of Raleigh Review Officer below. The City will retain a copy of the approved plans. Any work authorized by this approval must proceed in accordance with the plans kept on file with the City. This electronic approval may not be edited once issued. Any modification to this approval once issued will invalidate this approval.

City of Raleigh Development Approval _____

Raleigh Water Review Officer

BASS, NIXON & KENNEDY, INC.
CONSULTING ENGINEERS
6310 CHAPEL HILL ROAD, SUITE 250, RALEIGH, NC 27607
TELEPHONE: (919)851-4422 FAX: (919)851-8968
CERTIFICATION NUMBERS: NCBELS (C-0110); NCBOLA (C-0267)

NO.	DATE	DESCRIPTION	BY
		REVISIONS	

JOB NO. 03-19157 | PROGRESS | DRAWN BY MRM
DATE | OPEN SPACE PLAN
SCALE: 1" = 40' | CHK BY: MDB

COBBLESTONE VILLAGE
MIXED USE DEVELOPMENT
TOWN OF ROLESVILLE, WAKE COUNTY, NORTH CAROLINA

SHEET C1.2

TOWN OF ROLESVILLE PROJECT NO.

NOT RELEASED FOR CONSTRUCTION OR BID SOLICITATION

©2019 BASS, NIXON & KENNEDY, INC. EXPRESSLY RESERVES ITS COMMON LAW COPYRIGHT AND OTHER PROPERTY RIGHTS IN THESE PLANS. THESE PLANS ARE NOT TO BE REPRODUCED, CHANGED OR COPIED IN ANY FORM OR MANNER WHATSOEVER, NOR ARE THEY TO BE ASSIGNED TO ANY THIRD PARTY WITHOUT FIRST OBTAINING THE EXPRESSED WRITTEN PERMISSION AND CONSENT OF BASS, NIXON & KENNEDY, INC.

CITY OF RALEIGH - PLANS AUTHORIZED FOR CONSTRUCTION

Electronic Approval: This approval is being issued electronically. This approval is valid only upon the signature of a City of Raleigh Review Officer below. The City will retain a copy of the approved plans. Any work authorized by this approval must proceed in accordance with the plans kept on file with the City. This electronic approval may not be edited once issued. Any modification to this approval once issued will invalidate this approval.

City of Raleigh Development Approval _____

Raleigh Water Review Officer

Public
Water Distribution / Extension System
The City of Raleigh consents to the connection and extension of the City's public water system as shown on this plan. The material and Construction methods used for this project shall conform to the standards and specifications of the City's Public Utilities Handbook.

City of Raleigh Public Utilities Department Permit # W-3879

Authorization to Construct See digital signature

Private
Sewer Collection / Extension System
The City of Raleigh consents to the connection to its public sewer system and extension of the private sewer collection system as shown on this plan. The material and constructions methods used for this project shall conform to the standards and specifications of the City's Public Utilities Handbook.

City of Raleigh Public Utilities Department Permit # S-4962 (P)

Authorization to Construct See digital signature

ATTENTION CONTRACTORS

The ***Construction Contractor*** responsible for the extension of water, sewer, and/or reuse, as approved in these plans, is responsible for ***contacting*** the ***Public Utilities Department*** at ***(919) 996-4540*** at least ***twenty four hours*** prior to beginning any of their construction.

Failure to notify both ***City Departments*** in advance of beginning construction, will result in the issuance of ***monetary fines***, and require reinstallation of any water or sewer facilities not inspected as a result of this notification failure.

Failure to call for ***Inspection***, ***Install a Downstream Plug***, have ***Permitted Plans*** on the ***Jobsite***, or any other ***Violation*** of ***City of Raleigh Standards*** will result in a ***Fine and Possible Exclusion*** from future work in the ***City of Raleigh***.

STANDARD UTILITY NOTES (as applicable):

1. All materials & construction methods shall be in accordance with City of Raleigh design standards, details & specifications (reference: CORPUD Handbook, current edition)
2. Utility separation requirements:
   a) A distance of 100' shall be maintained between sanitary sewer & any private or public water supply source such as an impounded reservoir used as a source of drinking water. If adequate lateral separation cannot be achieved, ferrous sanitary sewer pipe shall be specified & installed to waterline specifications. However, the minimum separation shall not be less than 25' from a private well or 50' from a public well
   b) When installing water &/or sewer mains, the horizontal separation between utilities shall be 10'. If this separation cannot be maintained due to existing conditions, the variation allowed is the water main in a separate trench with the elevation of the water main at least 18" above the top of the sewer & must be approved by the Public Utilities Director. All distances are measured from outside diameter to outside diameter
   c) Where it is impossible to obtain proper separation, or anytime a sanitary sewer passes over a watermain, DIP materials or steel encasement extended 10' on each side of crossing must be specified & installed to waterline specifications
   d) 5.0' minimum horizontal separation is required between all sanitary sewer & storm sewer facilities, unless DIP material is specified for sanitary sewer
   e) Maintain 18" min. vertical separation at all watermain & RCP storm drain crossings; maintain 24" min. vertical separation at all sanitary sewer & RCP storm drain crossings. Where adequate separations cannot be achieved, specify DIP materials & a concrete cradle having 6" min. clearance (per CORPUD details W-41 & S-49)
   f) All other underground utilities shall cross water & sewer facilities with 18" min. vertical separation required
3. Any necessary field revisions are subject to review & approval of an amended plan &/or profile by the City of Raleigh Public Utilities Department prior to construction
4. Contractor shall maintain continuous water & sewer service to existing residences & businesses throughout construction of project. Any necessary service interruptions shall be preceded by a 24 hour advance notice to the City of Raleigh Public Utilities Department
5. 3.0' minimum cover is required on all water mains & sewer forcemains. 4.0' minimum cover is required on all reuse mains
6. It is the developer's responsibility to abandon or remove existing water & sewer services not being used in redevelopment of a site unless otherwise directed by the City of Raleigh Public Utilities Department. This includes abandoning tap at main & removal of service from ROW or easement per CORPUD Handbook procedure
7. Install ¾" copper* water services with meters located at ROW or within a 2'x2' Waterline Easement immediately adjacent. *NOTE: it is the applicant's responsibility to properly size the water service for each connection to provide adequate flow & pressure*
8. Install 4" PVC* sewer services @ 1.0% minimum grade with cleanouts located at ROW or easement line & spaced every 75 linear feet maximum
9. Pressure reducing valves are required on all water services exceeding 80 psi; backwater valves are required on all sanitary sewer services having building drains lower than 1.0' above the next upstream manhole
10. All environmental permits applicable to the project must be obtained from NCDWQ, USACE &/or FEMA for any riparian buffer, wetland &/or floodplain impacts (respectively) prior to construction.
11. NCDOT / Railroad Encroachment Agreements are required for any utility work (including main extensions & service taps) within state or railroad ROW prior to construction
12. Grease Interceptor / Oil Water Separator sizing calculations & installation specifications shall be approved by the CORPUD FOG Program Coordinator prior to issuance of a Building Permit. Contact Tim Beasley at (919) 996-2334 or timothy.beasley@raleighnc.gov for more information
13. Cross-connection control protection devices are required based on degree of health hazard involved as listed in Appendix-B of the Rules Governing Public Water Systems in North Carolina. These guidelines are the minimum requirements. The devices shall meet American Society of Sanitary Engineering (ASSE) standards or be on the University of Southern California approval list. The devices shall be installed and tested (both initial and periodic testing thereafter) in accordance with the manufacturer's recommendations or the local cross-connection control program, whichever is more stringent. Contact Joanie Hartley at (919) 996-5923 or joanie.hartley@raleighnc.gov for more information

NOTES:
1. FOR BUILDING SEWER PLUMBING THE FURTHEST MAIN UNDER SLAB UPSET 1.5' BELOW FFE.
2. BACKFLOW PREVENTERS TO BE LOCATED INSIDE OF BUILDINGS 2, 3, 4, 5, & 6.

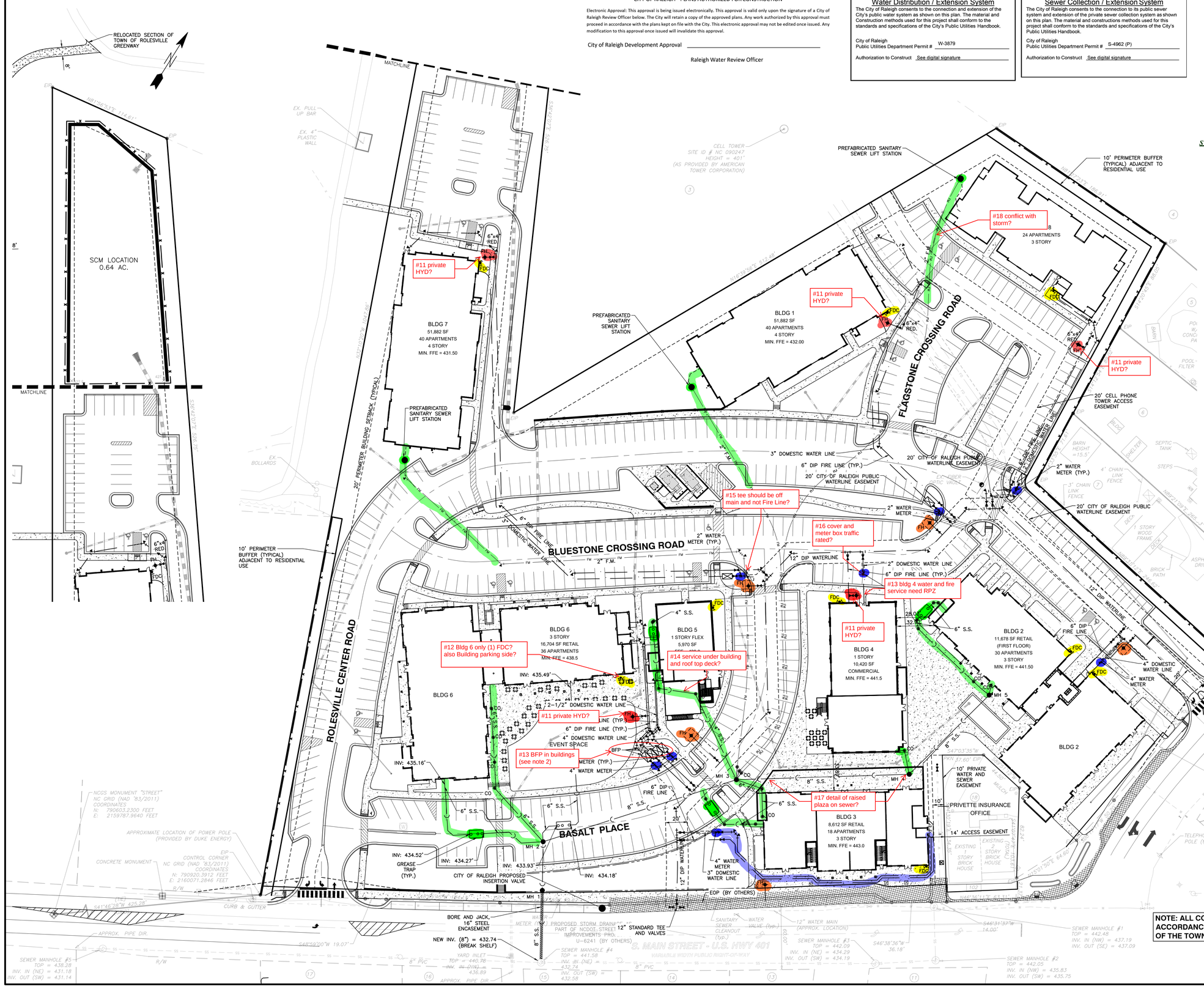

Hightligted items are for ID items.
only need to reference comment notes

NO FLOODPLAINS EXIST ON-SITE

NOTE: ALL CONSTRUCTION ACTIVITY MUST BE IN ACCORDANCE WITH THE ACCEPTED POLICIES OF THE TOWN OF ROLESVILLE AND NCDOT

TOWN OF ROLESVILLE PROJECT NO.

BNK
BASS, NIXON & KENNEDY, INC.
CONSULTING ENGINEERS
6310 CHAPEL HILL ROAD, SUITE 250, RALEIGH, NC 27607
TELEPHONE: (919)851-4422 FAX: (919)851-8968
CERTIFICATION NUMBERS: NCBELS (C-0110); NCBOLA (C-0267)

NO.	DATE	DESCRIPTION	BY
		REVISIONS	

03-19157 JOB NO. | PROGRESS DATE | MRM DRAWN BY

UTILITY PLAN

SCALE: 1" = 40' | CHK BY:MDB

COBBLESTONE VILLAGE
MIXED USE DEVELOPMENT
TOWN OF ROLESVILLE, WAKE COUNTY, NORTH CAROLINA

SHEET C2.1

NOT RELEASED FOR CONSTRUCTION OR BID SOLICITATION

©2019 BASS, NIXON & KENNEDY, INC. EXPRESSLY RESERVES ITS COMMON LAW COPYRIGHT AND OTHER PROPERTY RIGHTS IN THESE PLANS. THESE PLANS ARE NOT TO BE REPRODUCED, CHANGED OR COPIED IN ANY FORM OR MANNER WHATSOEVER, NOR ARE THEY TO BE ASSIGNED TO ANY THIRD PARTY WITHOUT FIRST OBTAINING THE EXPRESSED WRITTEN PERMISSION AND CONSENT OF BASS, NIXON & KENNEDY, INC.

CITY OF RALEIGH - PLANS AUTHORIZED FOR CONSTRUCTION

Electronic Approval: This approval is being issued electronically. This approval is valid only upon the signature of a City of Raleigh Review Officer below. The City will retain a copy of the approved plans. Any work authorized by this approval must proceed in accordance with the plans kept on file with the City. This electronic approval may not be edited once issued. Any modification to this approval once issued will invalidate this approval.

City of Raleigh Development Approval _____

Raleigh Water Review Officer

Structure	d_o (ft)	Velocity (fps)	Length (ft)	Width (ft)	Depth (in)	Type	d_{50}
FES 1	2.00	7.4	12	6	22	Class 'B'	6" - 13"
FES 3	3.00	6.5	18	9	22	Class 'B'	6" - 13"

* Per NYDoT Dissipator Schedule Fig.1

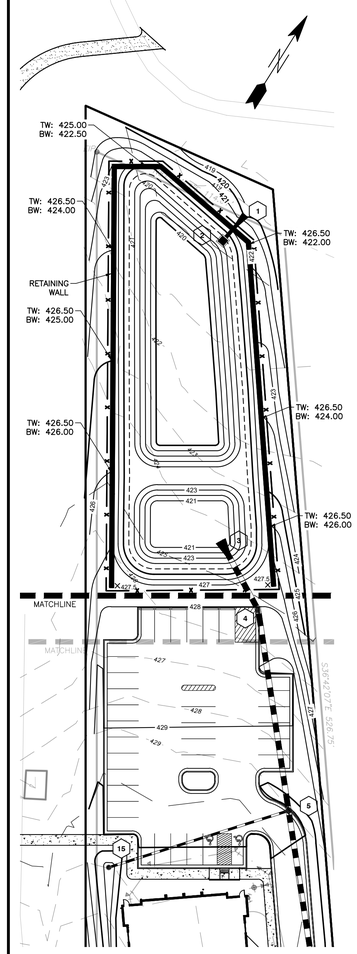

#26 Swale to be collect, impervious run off from roof, down spouts

10' PERIMETER BUFFER (TYPICAL) ADJACENT TO RESIDENTIAL USE

BLDG 8
24 APARTMENTS
3 STORY

BLDG 7
51,882 SF
40 APARTMENTS
4 STORY
MIN. FFE = 431.50

BLDG 1
51,882 SF
40 APARTMENTS
4 STORY
MIN. FFE = 432.00

FLAGSTONE CROSSING ROAD

BLUESTONE CROSSING ROAD

ROLESVILLE CENTER ROAD

BLDG 6
3 STORY
16,704 SF RETAIL
36 APARTMENTS
MIN. FFE = 438.5

BLDG 5
1 STORY FLEX
5,970 SF
FFE = 439.0

BLDG 4
1 STORY
10,420 SF
COMMERCIAL
MIN. FFE = 441.5

BLDG 2
11,678 SF RETAIL
(FIRST FLOOR)
30 APARTMENTS
3 STORY
MIN. FFE = 441.50

BLDG 3
MIN. FFE = 443.0

EVENT SPACE

PRIVETTE INSURANCE OFFICE

20' CELL PHONE TOWER ACCESS EASEMENT

20' CITY OF RALEIGH PUBLIC WATERLINE EASEMENT

20' PERIMETER BUILDING SETBACK (TYPICAL)

10' PERIMETER BUFFER (TYPICAL) ADJACENT TO RESIDENTIAL USE

12" HDPE

AREA DRAIN (TYP.)

TW: 432.50'
BW: 425.64'

TW: 433.00'
BW: 431.50'

TW: 432.00'
BW: 425.86'

#19 looks like the existing topo has been moved. please fix

#20 RIM ? ie?

#20 RIM ? ie?

#20 RIM ? ie?

#20 RIM ? ie?

#23 missing 441 contour?

#25 how is this area draining? no grades, single contour and (Str 27 behind curb)

FYI berm or swale through walk

#22 ADA access to Building 3?

#17 detail of raised plaza, grades entry/access locations?

#21 ENGINEERING NOT ABLE TO COMPLETE REVIEW

-revised storm drainage and calcs needed for updated design along with DA updated for all structures (DI, CB, AD)

-Has the revised plan been submitted to Wake County for Pond and SEC review/revisions to plans

09/01/23

BC 441.15 (by others)

#24 Bldg 3 FFE was 441.5 and now FFE-443.0 (8%-9% from FFE to BC)

NO FLOODPLAINS EXIST ON-SITE

NOTE: ALL CONSTRUCTION ACTIVITY MUST BE IN ACCORDANCE WITH THE ACCEPTED POLICIES OF THE TOWN OF ROLESVILLE AND NCDOT

PROPOSED STORM DRAINAGE AS PART OF NCDOT STREETSCAPE IMPROVEMENTS PROJECT 3 U-6241 (BY OTHERS)

FIELD ADJUST CURB INLET TO MATCH CURB LINE

S. MAIN STREET - U.S. HWY 401

SCALE IN FEET
0 20 40 80 120 160

TOWN OF ROLESVILLE PROJECT NO.

BASS, NIXON & KENNEDY, INC.
CONSULTING ENGINEERS
6310 CHAPEL HILL ROAD, SUITE 250, RALEIGH, NC 27607
TELEPHONE: (919)851-4422 FAX: (919)851-8968
CERTIFICATION NUMBERS: NCBELS (C-0110); NCBOLA (C-0267)

NO.	DATE	DESCRIPTION	BY
		REVISIONS	

JOB NO. 03-19157 PROGRESS MRM
DATE DRAWN BY

GRADING PLAN

SCALE: 1" = 40' CHK BY: MDB

COBBLESTONE VILLAGE
MIXED USE DEVELOPMENT
TOWN OF ROLESVILLE, WAKE COUNTY, NORTH CAROLINA

SHEET C3.1

NOT RELEASED FOR CONSTRUCTION OR BID SOLICITATION

©2019 BASS, NIXON & KENNEDY, INC. EXPRESSLY RESERVES ITS COMMON LAW COPYRIGHT AND OTHER PROPERTY RIGHTS IN THESE PLANS. THESE PLANS ARE NOT TO BE REPRODUCED, CHANGED OR COPIED IN ANY FORM OR MANNER WHATSOEVER, NOR ARE THEY TO BE ASSIGNED TO ANY THIRD PARTY WITHOUT FIRST OBTAINING THE EXPRESSED WRITTEN PERMISSION AND CONSENT OF BASS, NIXON & KENNEDY, INC.

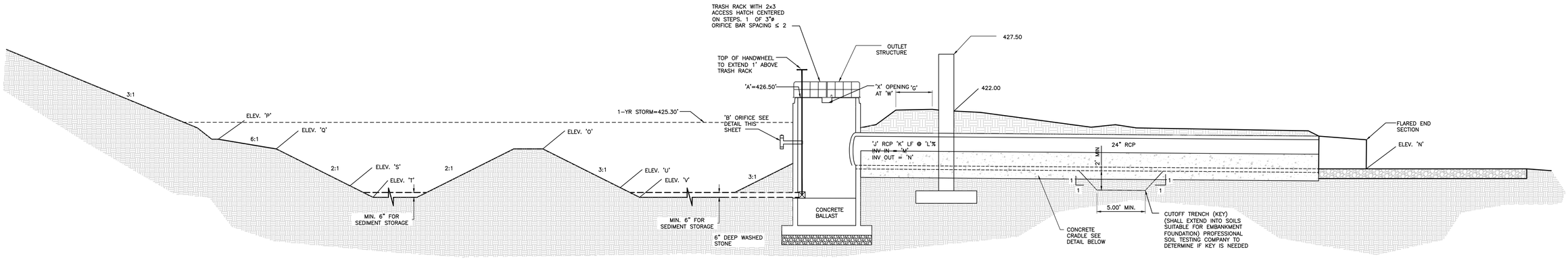

CROSS-SECTION OF WET POND A-A

NTS

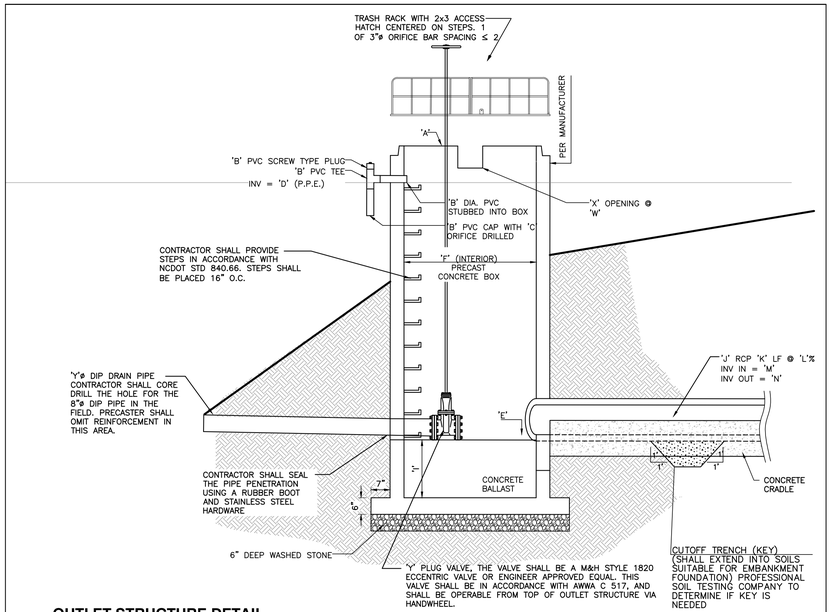

OUTLET STRUCTURE DETAIL

NOT TO SCALE

BOUYANCY CALCULATIONS FOR RISER/BARREL
COBBLESTONE VILLAGE
WET POND - SCM

Square Riser Inside Length (ft):	4.0
Riser Wall Thickness (in):	6
Pond Bottom Elevation (ft):	420.00
Riser Crest Elevation (ft):	426.50
Density of Riser Matl (lb/cf):	150.00
Pipe Inside Diameter (in):	24
Pipe Wall Thickness (in):	3
Length of Pipe Exposed (ft):	1.00
Density H2O (lb/cf):	62.40
Volume H2O Displaced by Riser (cf):	131.63
Weight H2O Displaced by Riser (lb):	8213.40
Volume H2O Displaced by Pipe (cf):	4.91
Weight H2O Displaced by Pipe (lb):	306.31
Total Uplift Force (lb):	8519.71
Weight of Riser (lb):	4,144
Weight of Pipe (lb):	265.07
Pipe/Riser Downward Force (lb):	4408.82

Ballast Concrete:

Minimum Factor of Safety:	1.2
Required ballast thickness (in):	37.02
Provided Ballast Thickness (in):	40
Total Downward Force (lb):	10,692
Provided Factor of Safety:	1.25

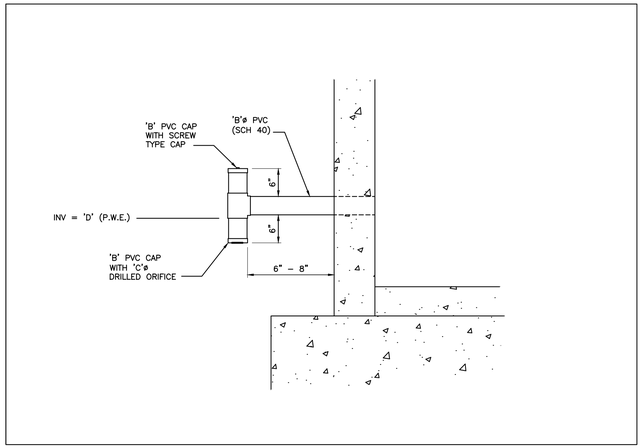

INVERTED INTAKE DETAIL (RISER)

NTS

POND LEGEND - SCM

	Description	Design	As-Built
A	Top of Riser	426.50 ft	
B	Diameter of PVC Drawdown Pipe	4 in	
C	Drawdown Orifice Opening	2.5 in	
D	Drawdown Pipe Elevation / Permanent Pool	424.50 ft	
E	Inside Bottom Riser Elevation	420.00 ft	
F	Outlet Structure Size	4ft x 4ft	
G	Top of Berm Width	10 ft	
H	Top of Dam	428.00 ft	
I	Ballast Thickness	40 in	
J	Size of Outlet Pipe	24 in	
K	Length of Outlet Pipe	18 ft	
L	Slope of Outlet Pipe	2.78 %	
M	Invert in Outlet Pipe	420.00 ft	
N	Invert Out Outlet Pipe	419.80 ft	
O	Top Elevation Forebay Berm	424.00 ft	
P	Elevation Top of Litoral Shelf	425.00 ft	
Q	Elevation Bottom of Litoral Shelf	424.00 ft	
R	Slope of Litoral Shelf	6:1	
S	Sediment Cleanout Elevation Forbay	422.00 ft	
T	Bottom Elevation Forebay	421.00 ft	
U	Sediment Cleanout Elevation Permanent Pool	421.00 ft	
V	Bottom Elevation Permanent Pool	420.00 ft	
W	Elevation Secondary Weir	426.20 ft	
X	Width Secondary Weir	12 in	

Special Instructions

Place Drawdown pipe opposite of outlet pipe and ensure a minimum of 12" clearance between drawdown pipe opening and ground elevation to allow for proper drainage. Place secondary weir above drawdown pipe on same side of outlet structure.

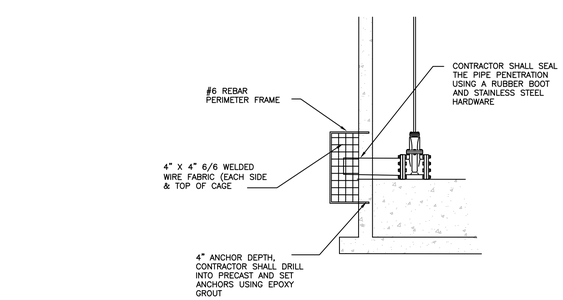

(IF APPLICABLE) EMERGENCY DRIP DRAIN TRASH RACK DETAIL

NOT TO SCALE

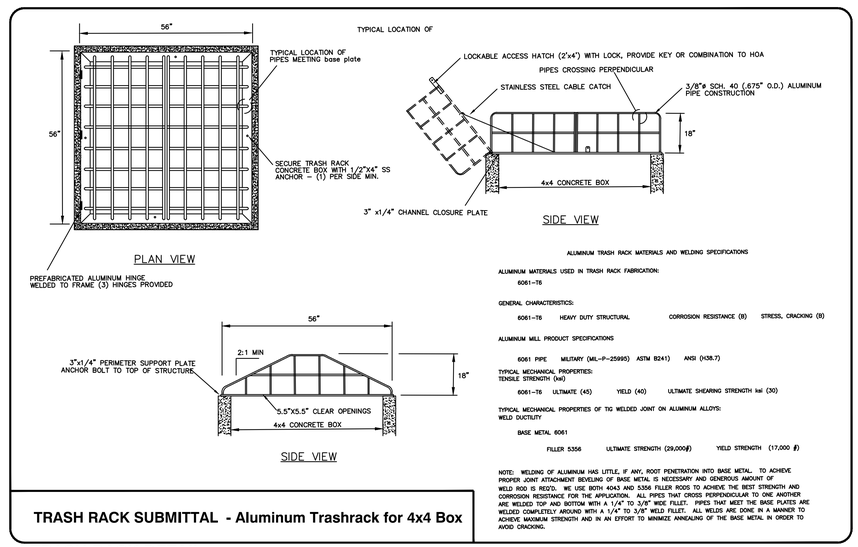

ALUMINUM TRASH RACK MATERIALS AND WELDING SPECIFICATIONS

ALUMINUM MATERIALS USED IN TRASH RACK FABRICATION:

6061-T6

GENERAL CHARACTERISTICS:

6061-T6 HEAVY DUTY STRUCTURAL CORROSION RESISTANCE (B) STRESS, CRACKING (B)

ALUMINUM MILL PRODUCT SPECIFICATIONS

6061 PIPE MILITARY (MIL-P-25995) ASTM B241) ANSI (H38.7)

TYPICAL MECHANICAL PROPERTIES:
TENSILE STRENGTH (ksi)

6061-T6 ULTIMATE (45) YIELD (40) ULTIMATE SHEARING STRENGTH ksi (30)

TYPICAL MECHANICAL PROPERTIES OF TIG WELDED JOINT ON ALUMINUM ALLOYS:
WELD DUCTILITY

BASE METAL 6061

FILLER 5356 ULTIMATE STRENGTH (29,000#) YIELD STRENGTH (17,000 #)

NOTE: WELDING OF ALUMINUM HAS LITTLE, IF ANY, ROOT PENETRATION INTO BASE METAL. TO ACHIEVE PROPER JOINT ATTACHMENT BEVELING OF BASE METAL IS NECESSARY AND GENEROUS AMOUNT OF WELD ROD IS REQ'D. WE USE BOTH 4043 AND 5356 FILLER RODS TO ACHIEVE THE BEST STRENGTH AND CORROSION RESISTANCE FOR THE APPLICATION. ALL PIPES THAT CROSS PERPENDICULAR TO ONE ANOTHER ARE WELDED TOP AND BOTTOM WITH A 1/4" TO 3/8" WIDE FILLET. PIPES THAT MEET THE BASE PLATES ARE WELDED COMPLETELY AROUND WITH A 1/4" TO 3/8" WELD FILLET. ALL WELDS ARE DONE IN A MANNER TO ACHIEVE MAXIMUM STRENGTH AND IN AN EFFORT TO MINIMIZE ANNEALING OF THE BASE METAL IN ORDER TO AVOID CRACKING.

TRASH RACK SUBMITTAL - Aluminum Trashrack for 4x4 Box

TRASH RACK DETAIL

NTS

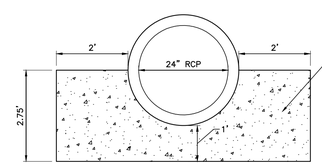

4000 PSI MONOLITHIC CONCRETE CRADLE UNDER FULL LENGTH OF PIPE. CONCRETE SHALL BE 2–2.5" SLUMP. CERTIFICATION THAT CONCRETE MEETS THESE SPECIFICATION'S SHALL BE PROVIDED TO THE OWNER. PLACE UNDER PIPE WITH HAND EQUIPMENT AND VIBRATE INTERNALLY FOR CONSOLIDATION, FINISH SHALL BE "ROUGH". FLOWABLE FILLS, SLURRIES, OR OR GELS ARE NOT PERMITTED.

CONCRETE CRADLE DETAIL

NOT TO SCALE

CITY OF RALEIGH - PLANS AUTHORIZED FOR CONSTRUCTION

Electronic Approval: This approval is being issued electronically. This approval is valid only upon the signature of a City of Raleigh Review Officer below. The City will retain a copy of the approved plans. Any work authorized by this approval must proceed in accordance with the plans kept on file with the City. This electronic approval may not be edited once issued. Any modification to this approval once issued will invalidate this approval.

City of Raleigh Development Approval _____

Raleigh Water Review Officer

NORTH CAROLINA PROFESSIONAL SEAL 036908 ENGINEER MARY D. BIZZELL

09/01/23

NO FLOODPLAINS EXIST ON-SITE

NOTE: ALL CONSTRUCTION ACTIVITY MUST BE IN ACCORDANCE WITH THE ACCEPTED POLICIES OF THE TOWN OF ROLESVILLE AND NCDOT

BASS, NIXON & KENNEDY, INC.
CONSULTING ENGINEERS
6310 CHAPEL HILL ROAD, SUITE 250, RALEIGH, NC 27607
TELEPHONE: (919)851-4422 FAX: (919)851-8968
CERTIFICATION NUMBERS: NCBELS (C-0110); NCBOLA (C-0267)

NO.	DATE	DESCRIPTION	BY
		REVISIONS	

03-19157 JOB NO. | PROGRESS DATE | MRM DRAWN BY

BMP DETAILS

SCALE: N.T.S. | CHK BY: MDB

COBBLESTONE VILLAGE
MIXED USE DEVELOPMENT
TOWN OF ROLESVILLE, WAKE COUNTY, NORTH CAROLINA

SHEET C3.2

NOT RELEASED FOR CONSTRUCTION OR BID SOLICITATION

TOWN OF ROLESVILLE PROJECT NO.

©2019 BASS, NIXON & KENNEDY, INC. EXPRESSLY RESERVES ITS COMMON LAW COPYRIGHT AND OTHER PROPERTY RIGHTS IN THESE PLANS. THESE PLANS ARE NOT TO BE REPRODUCED, CHANGED OR COPIED IN ANY FORM OR MANNER WHATSOEVER, NOR ARE THEY TO BE ASSIGNED TO ANY THIRD PARTY WITHOUT FIRST OBTAINING THE EXPRESSED WRITTEN PERMISSION AND CONSENT OF BASS, NIXON & KENNEDY, INC.

CONSTRUCTION SEQUENCE - STAGE 1

1. ONCE THE EROSION AND SEDIMENT CONTROL PLAN APPROVAL AND NCG01 CERTIFICATE OF COVERAGE ARE OBTAINED, SCHEDULE A PRECONSTRUCTION CONFERENCE WITH THE ENVIRONMENTAL CONSULTANT. OBTAIN A LAND–DISTURBING PERMIT.
2. INSTALL GRAVEL CONSTRUCTION PAD, TEMPORARY DIVERSIONS, SILT FENCE, SKIMMER SEDIMENT BASINS AND OTHER MEASURES AS SHOWN ON THE APPROVED PLAN. CLEAR ONLY AS NECESSARY TO INSTALL THESE DEVICES. SEED TEMPORARY DIVERSIONS, BERMS AND BASINS IMMEDIATELY AFTER CONSTRUCTION.
3. CALL ENVIRONMENTAL CONSULTANT FOR AN ONSITE INSPECTION BY THE ENVIRONMENTAL CONSULTANT TO OBTAIN A CERTIFICATE OF COMPLIANCE.
4. BEGIN CLEARING AND GRUBBING. MAINTAIN DEVICES AS NEEDED. ROUGH GRADE SITE.
5. STABILIZE SITE AS AREAS ARE BROUGHT UP TO FINISH GRADE WITH VEGETATION, PAVING, DITCH LININGS, ETC. SEED AND MULCH DENUDED AREAS PER GROUND STABILIZATION TIME FRAMES.
6. STABILIZE SITE AS AREAS ARE BROUGHT UP TO FINISH GRADE WITH VEGETATION, ALLEY PAVING, DITCH LININGS, ETC. SEED AND MULCH DENUDED AREAS PER GROUND STABILIZATION TIME FRAMES.
7. CALL ENVIRONMENTAL CONSULTANT FOR AN ONSITE INSPECTION BY THE ENVIRONMENTAL CONSULTANT PRIOR TO THE REMOVAL OF SKIMMER SEDIMENT BASIN #1.
8. CONTINUE TO SOIL EROSION PLAN STAGE 2 ONCE SKIMMER BASIN #1 HAS BEEN REMOVED.

NOTE: WAKE COUNTY MUST GRANT PERMISSION TO CONVERT THE SEDIMENT BASIN OVER TO THE STORMWATER USE PRIOR TO COMPLETING ANY RELATED WORK.

TOTAL DISTURBED AREA = 11.0 AC

DENUDED AREA = 10.96 AC

REQUIRED WAKE COUNTY BASIN REMOVAL AND/OR CONVERSION SEQUENCE

1. SCHEDULE A SITE MEETING WITH THE ENVIRONMENTAL CONSULTANT TO DETERMINE IF A BASIN CAN BE REMOVED OR CONVERTED TO A PERMANENT STORMWATER POND. INSTALL SILT FENCING OR OTHER TEMPORARY EROSION CONTROL MEASURES AS NEEDED PRIOR TO REMOVAL OF THE BASIN.
2. UTILIZE OUTLET STRUCTURES THAT WITHDRAW WATER FROM THE SEDIMENT BASIN SURFACE FOR DRAW DOWN OF WATER IN BASIN FOR MAINTENANCE OR CLOSE OUT UNLESS INFEASIBLE. SEE REQUIREMENTS OF NCG01 PERMIT PART II, SECTION G, ITEM (4) ENTITLED "DRAW DOWN OF SEDIMENT BASINS FOR MAINTENANCE OR CLOSE OUT" AND REFER TO WAKE COUNTY "FILTER BAG FOR DEWATERING ACTIVITIES" CONSTRUCTION DETAIL.
3. REMOVE BASIN(S) AND ASSOCIATED TEMPORARY DIVERSION DITCHES. IF CULVERT PIPES NEED TO BE EXTENDED, PERFORM THIS OPERATION AT THIS TIME. FINE GRADE AREA IN PREPARATION FOR SEEDING.
4. PERFORM SEEDBED PREPARATION, SEED, MULCH AND ASPHALT TACK ANY RESULTING BARE AREAS IMMEDIATELY.
5. INSTALL VELOCITY DISSIPATORS AND/OR LEVEL SPREADERS AS REQUIRED ON THE EROSION CONTROL PLAN.
6. WHEN SITE IS FULLY STABILIZED, CALL ENVIRONMENTAL CONSULTANT FOR APPROVAL OF REMOVING REMAINING TEMPORARY EROSION CONTROL MEASURES AND ADVICE ON WHEN SITE CAN BE ISSUED A CERTIFICATE OF COMPLETION. NOTE: A MEETING SHOULD ALSO BE SCHEDULED WITH THE ENVIRONMENTAL CONSULTANT TO DETERMINE WHEN A BASIN MAY BE CONVERTED FOR STORMWATER USE. SOME MUNICIPALITIES MAY ALSO REQUIRE THIS.

SEDIMENT BASIN SUMMARY CHART

Sediment Basin Number	1	2	3
Drainage Area (acres)	3.42	4.61	0.6
Q10(cfs)	(0.5)(7.22)(3.42)=12.35	(0.5)(7.22)(4.61)=16.64	(0.5)(7.22)(0.60)=2.17
Weir Size (ft)	10 x 1.5	10 x 1.5	10 x 1.5
Surface Area Required (SF)	(435)(12.35)=5,372	(435)(16.64)=7,238	(435)(2.17)=944
Volume Required (CF)	(1800)(3.42)= 6,156	(1800)(4.61)= 8,298	(1800)(0.60)= 1,080
Dimensions (ft)	see plans	see plans	see plans
Surface Area Provided (SF)	5,400	10,640	1,584
Volume Provided (CF)	13,572	27,636	2,563
Skimmer Size	4"	4"	3
Orifice Radius	0.5"	0.63"	0.25
Orifice Diameter	1.0"	1.25"	0.5
Drawdown Time (Days)	4.62	3.98	3.74
Number of Baffles	3	3	3

Structure	d_s (ft)	Velocity (fps)	Length (ft)	Width (ft)	Depth (in)	Type	d_{50}
FES 1	2.00	7.4	12	6	22	Class 'B'	6" - 13"
FES 3	3.00	6.5	18	9	22	Class 'B'	6" - 13"
DV DITCH 1*	1.25	5.3	5	4	9	Class 'A'	3" - 6"
DV DITCH 2*	1.25	5.3	5	4	9	Class 'A'	3" - 6"
DV DITCH 3*	1.25	5.3	5	4	9	Class 'A'	3" - 6"
DV DITCH 4*	1.25	5.3	5	4	9	Class 'A'	3" - 6"
PIPE 1**	1.25	5.3	5	4	9	Class 'A'	3" - 6"
PIPE 2**	1.25	5.3	5	4	9	Class 'A'	3" - 6"

*Per NYDoT Dissipator Schedule Fig.1

DITCH/CHANNEL CALCULATIONS

DIVERSION DITCH ID	LENGTH (LF)	DA (Ac)	Q10 (CFS)	SLOPE (%)	V10 (FPS)	LINER *	PERMISSIBLE SHEAR STRESS (PSF)	CALCULATED SHEAR STRESS (PSF)
DV-1	296	1.02	2.34	2.00	2.01	SC150	2.00	0.78
DV-2	495	1.00	2.30	2.60	2.29	SC150	2.00	0.94
DV-3	442	0.52	1.19	1.80	0.92	SC150	1.80	0.29
DV-4	167	0.06	0.13	2.90	0.98	SC150	1.80	0.38

* NAG = NORTH AMERICAN GREEN OR EQUIVALENT

CITY OF RALEIGH - PLANS AUTHORIZED FOR CONSTRUCTION

Electronic Approval: This approval is being issued electronically. This approval is valid only upon the signature of a City of Raleigh Review Officer below. The City will retain a copy of the approved plans. Any work authorized by this approval must proceed in accordance with the plans kept on file with the City. This electronic approval may not be edited once issued. Any modification to this approval once issued will invalidate this approval.

City of Raleigh Development Approval _____

Raleigh Water Review Officer

Skimmer Basin #1

Okay

3.42	Drainage Area (Acres)
12.35	Peak Flow from 10-year Storm (cfs)
6156	Required Volume (ft^3)
5372	Required Surface Area (ft^2)
51.8	Suggested Width (ft)
103.7	Suggested Length (ft)
54	Trial Top Width at Spillway Invert (ft)
100	Trial Top Length at Spillway Invert (ft)
2	Trial Side Slope Ratio Z:1
3	Trial Depth (ft) (2 to 3.5 feet above grade)
42	Bottom Width (ft)
88	Bottom Length (ft)
3696	Bottom Area (ft^2)
13572	Actual Volume (ft^3) Okay
5400	Actual Surface Area (ft^2) Okay
10	Trial Weir Length (ft)
1	Suggested Trial Depth of Flow (ft)
30.0	Spillway Capacity (cfs) Okay
4	Skimmer Size (inches)
0.333	Head on Skimmer (feet)
1	Orifice Size (1/4 inch increments)
4.62	Dewatering Time (days)
	Required 3 to 5 days for Wake County

Skimmer Size (inches)
1.5
2
2.5
3
3.5
4
5
6

Skimmer Basin #2

Okay

4.61	Drainage Area (Acres)
16.64	Peak Flow from 10-year Storm (cfs)
8298	Required Volume (ft^3)
7238	Required Surface Area (ft^2)
60.2	Suggested Width (ft)
120.3	Suggested Length (ft)
56	Trial Top Width at Spillway Invert (ft)
190	Trial Top Length at Spillway Invert (ft)
2	Trial Side Slope Ratio Z:1
3	Trial Depth (ft) (2 to 3.5 feet above grade)
44	Bottom Width (ft)
178	Bottom Length (ft)
7832	Bottom Area (ft^2)
27636	Actual Volume (ft^3) Okay
10640	Actual Surface Area (ft^2) Okay
20	Trial Weir Length (ft)
0.75	Suggested Trial Depth of Flow (ft)
39.0	Spillway Capacity (cfs) Okay
4	Skimmer Size (inches)
0.333	Head on Skimmer (feet)
1.25	Orifice Size (1/4 inch increments)
3.98	Dewatering Time (days)
	Required 3 to 5 days for Wake County

Skimmer Size (inches)
1.5
2
2.5
3
3.5
4
5
6

Skimmer Basin #3

Okay

0.6	Drainage Area (Acres)
2.17	Peak Flow from 10-year Storm (cfs)
1080	Required Volume (ft^3)
944	Required Surface Area (ft^2)
21.7	Suggested Width (ft)
43.4	Suggested Length (ft)
33	Trial Top Width at Spillway Invert (ft)
48	Trial Top Length at Spillway Invert (ft)
2	Trial Side Slope Ratio Z:1
2	Trial Depth (ft) (2 to 3.5 feet above grade)
25	Bottom Width (ft)
40	Bottom Length (ft)
1000	Bottom Area (ft^2)
2563	Actual Volume (ft^3) Okay
1584	Actual Surface Area (ft^2) Okay
10	Trial Weir Length (ft)
0.75	Suggested Trial Depth of Flow (ft)
19.5	Spillway Capacity (cfs) Okay
3	Skimmer Size (inches)
0.25	Head on Skimmer (feet)
0.5	Orifice Size (1/4 inch increments)
3.74	Dewatering Time (days)
	Required 3 to 5 days for Wake County

Skimmer Size (inches)
1.5
2
2.5
3
3.5
4
5
6

LEGEND

- TEMP CONCRETE WASHOUT
- TEMP LOW SPOT SILT FENCE OUTLET
- ROCK CHECK DAM
- TEMP CONSTRUCTION ENTRANCE
- RIP–RAP DISSAPTOR
- TEMP DIVERSION DITCH (LINED–SEE DETAIL)
- TEMP SILT FENCE
- TEMP TREE PROTECTION FENCE
- LIMITS OF DISTURBANCE
- SEDIMENT BASIN BAFFLE
- TEMP TREE PROTECTION & SILT FENCE COMBO

NO FLOODPLAINS EXIST ON-SITE

NOTE: ALL CONSTRUCTION ACTIVITY MUST BE IN ACCORDANCE WITH THE ACCEPTED POLICIES OF THE TOWN OF ROLESVILLE AND NCDOT

SCALE IN FEET: 0 20 40 80 120 160

NORTH CAROLINA PROFESSIONAL SEAL 036905 ENGINEER MARTY D. BIZZELL

09/01/23

BNK

BASS, NIXON & KENNEDY, INC.
CONSULTING ENGINEERS
6310 CHAPEL HILL ROAD, SUITE 250, RALEIGH, NC 27607
TELEPHONE: (919)851-4422 FAX: (919)851-8968
CERTIFICATION NUMBERS: NCBELS (C-0110); NCBOLA (C-0267)

NO.	DATE	DESCRIPTION	BY
		REVISIONS	

03-19157 PROGRESS MRM
JOB NO. DATE DRAWN BY

EROSION CONTROL PLAN - STAGE 1

SCALE: 1" = 40' CHK BY:MDB

COBBLESTONE VILLAGE
MIXED USE DEVELOPMENT
TOWN OF ROLESVILLE, WAKE COUNTY, NORTH CAROLINA

SHEET C3.3

TOWN OF ROLESVILLE PROJECT NO.

NOT RELEASED FOR CONSTRUCTION OR BID SOLICITATION

©2019 BASS, NIXON & KENNEDY, INC. EXPRESSLY RESERVES ITS COMMON LAW COPYRIGHT AND OTHER PROPERTY RIGHTS IN THESE PLANS. THESE PLANS ARE NOT TO BE REPRODUCED, CHANGED OR COPIED IN ANY FORM OR MANNER WHATSOEVER, NOR ARE THEY TO BE ASSIGNED TO ANY THIRD PARTY WITHOUT FIRST OBTAINING THE EXPRESSED WRITTEN PERMISSION AND CONSENT OF BASS, NIXON & KENNEDY, INC.

CONSTRUCTION SEQUENCE - STAGE 2

1. BEGIN CONSTRUCTION OF ALL BUILDINGS.
2. STABILIZE SITE AS NEW DISTURBED AREAS ARE BROUGHT UP TO FINISH GRADE WITH VEGETATION, PAVING, DITCH LININGS, ETC. SEED AND MULCH DENUDED AREAS PER GROUND STABILIZATION TIME FRAMES.
3. WHEN CONSTRUCTION OF PARKING LOTS ARE COMPLETE AND ALL AREAS ARE STABILIZED COMPLETELY, CALL ENVIRONMENTAL CONSULTANT FOR AN INSPECTION.
4. IF THE SITE IS APPROVED, REMOVE TEMPORARY DIVERSIONS, SILT FENCE, SEDIMENT BASINS, ETC., AND SEED OUT OR STABILIZE ANY RESULTING BARE AREAS. ALL REMAINING PERMANENT EROSION CONTROL DEVICES, SUCH AS VELOCITY DISSIPATORS, SHOULD NOW BE INSTALLED.
5. WHEN VEGETATION HAS BECOME ESTABLISHED, CALL FOR A FINAL SITE INSPECTION BY THE ENVIRONMENTAL CONSULTANT. OBTAIN A CERTIFICATE OF COMPLETION.

NOTE: WAKE COUNTY MUST GRANT PERMISSION TO CONVERT THE SEDIMENT BASIN OVER TO THE STORMWATER USE PRIOR TO COMPLETING ANY RELATED WORK.

TOTAL DISTURBED AREA = 10.96 AC

ENVIRONMENTAL CONSULTANT: JEEVAN NEUPANE (919–819–8907)

REQUIRED WAKE COUNTY BASIN REMOVAL AND/OR CONVERSION SEQUENCE

1. SCHEDULE A SITE MEETING WITH THE ENVIRONMENTAL CONSULTANT TO DETERMINE IF A BASIN CAN BE REMOVED OR CONVERTED TO A PERMANENT STORMWATER POND. INSTALL SILT FENCING OR OTHER TEMPORARY EROSION CONTROL MEASURES AS NEEDED PRIOR TO REMOVAL OF THE BASIN.
2. UTILIZE OUTLET STRUCTURES THAT WITHDRAW WATER FROM THE SEDIMENT BASIN SURFACE FOR DRAW DOWN OF WATER IN BASIN FOR MAINTENANCE OR CLOSE OUT UNLESS INFEASIBLE. SEE REQUIREMENTS OF NCG01 PERMIT PART II, SECTION G, ITEM (4) ENTITLED "DRAW DOWN OF SEDIMENT BASINS FOR MAINTENANCE OR CLOSE OUT" AND REFER TO WAKE COUNTY "FILTER BAG FOR DEWATERING ACTIVITIES" CONSTRUCTION DETAIL.
3. REMOVE BASIN(S) AND ASSOCIATED TEMPORARY DIVERSION DITCHES. IF CULVERT PIPES NEED TO BE EXTENDED, PERFORM THIS OPERATION AT THIS TIME. FINE GRADE AREA IN PREPARATION FOR SEEDING.
4. PERFORM SEEDBED PREPARATION, SEED, MULCH AND ASPHALT TACK ANY RESULTING BARE AREAS IMMEDIATELY.
5. INSTALL VELOCITY DISSIPATORS AND/OR LEVEL SPREADERS AS REQUIRED ON THE EROSION CONTROL PLAN.
6. WHEN SITE IS FULLY STABILIZED, CALL ENVIRONMENTAL CONSULTANT FOR APPROVAL OF REMOVING REMAINING TEMPORARY EROSION CONTROL MEASURES AND ADVICE ON WHEN SITE CAN BE ISSUED A CERTIFICATE OF COMPLETION. NOTE: A MEETING SHOULD ALSO BE SCHEDULED WITH THE ENVIRONMENTAL CONSULTANT TO DETERMINE WHEN A BASIN MAY BE CONVERTED FOR STORMWATER USE. SOME MUNICIPALITIES MAY ALSO REQUIRE THIS.

Skimmer Basin #2

Okay

6.99	Drainage Area (Acres)	
25.23	Peak Flow from 10-year Storm (cfs)	
12582	Required Volume (ft^3)	
10975	Required Surface Area (ft^2)	
74.1	Suggested Width (ft)	
148.2	Suggested Length (ft)	
58	Trial Top Width at Spillway Invert (ft)	
190	Trial Top Length at Spillway Invert (ft)	
2	Trial Side Slope Ratio Z:1	
3	Trial Depth (ft) (2 to 3.5 feet above grade)	
46	Bottom Width (ft)	
178	Bottom Length (ft)	
8188	Bottom Area (ft^2)	
28740	Actual Volume (ft^3)	Okay
11020	Actual Surface Area (ft^2)	Okay
20	Trial Weir Length (ft)	
0.75	Suggested Trial Depth of Flow (ft)	
39.0	Spillway Capacity (cfs)	Okay
4	Skimmer Size (inches)	
0.333	Head on Skimmer (feet)	
1.5	Orifice Size (1/4 inch increments)	
4.20	Dewatering Time (days)	
	Required 3 to 5 days for Wake County	

Skimmer Size (Inches)
1.5
2
2.5
3
4
5
6
8

SEDIMENT BASIN SUMMARY CHART

Sediment Basin Number	1	2
Drainage Area (acres)	1.74	6.99
Q10(cfs)	(0.5)(7.22)(1.74)=6.28	(0.5)(7.22)(6.99)=25.23
Weir Size (ft)	10 x 1.5	10 x 1.5
Surface Area Required (SF)	(435)(6.28)=2,732	(435)(25.23)=10,975
Volume Required (CF)	(1800)(1.74)= 3,132	(1800)(6.99)= 12,582
Dimensions (ft)	see plans	see plans
Surface Area Provided (SF)	2,800	11,000
Volume Provided (CF)	5,646	27,500
Skimmer Size	4"	4
Orifice Radius	0.4"	0.75
Orifice Diameter	0.75"	1.5
Drawdown Time (Days)	4.18	4.2
Number of Baffles	3	3

DITCH/CHANNEL CALCULATIONS

DIVERSION DITCH ID	LENGTH (LF)	DA (Ac)	Q10 (CFS)	SLOPE (%)	V10 (FPS)	LINER *	PERMISSIBLE SHEAR STRESS (PSF)	CALCULATED SHEAR STRESS (PSF)
DV-1	296	1.02	2.34	2.00	2.01	SC150	2.00	0.78
DV-2	495	1.00	2.30	2.60	2.29	SC150	2.00	0.94
DV-3	442	0.52	1.19	1.80	0.92	SC150	1.80	0.29
DV-4	167	0.06	0.13	2.90	0.96	SC150	1.80	0.38

* NAG = NORTH AMERICAN GREEN OR EQUIVALENT

LEGEND

- TEMP CONSTRUCTION ENTRANCE
- TEMP LOW SPOT SILT FENCE OUTLET
- TEMP INLET PROTECTION
- RIP–RAP DISSAPTOR
- TEMP SILT FENCE
- TPF — TEMP TREE PROTECTION FENCE
- LIMITS OF DISTURBANCE
- x — SEDIMENT BASIN BAFFLE
- TPF — TEMP TREE PROTECTION & SILT FENCE COMBO

CITY OF RALEIGH - PLANS AUTHORIZED FOR CONSTRUCTION

Electronic Approval: This approval is being issued electronically. This approval is valid only upon the signature of a City of Raleigh Review Officer below. The City will retain a copy of the approved plans. Any work authorized by this approval must proceed in accordance with the plans kept on file with the City. This electronic approval may not be edited once issued. Any modification to this approval once issued will invalidate this approval.

City of Raleigh Development Approval ____________________

Raleigh Water Review Officer

#27 Update SEC plans per revised storm

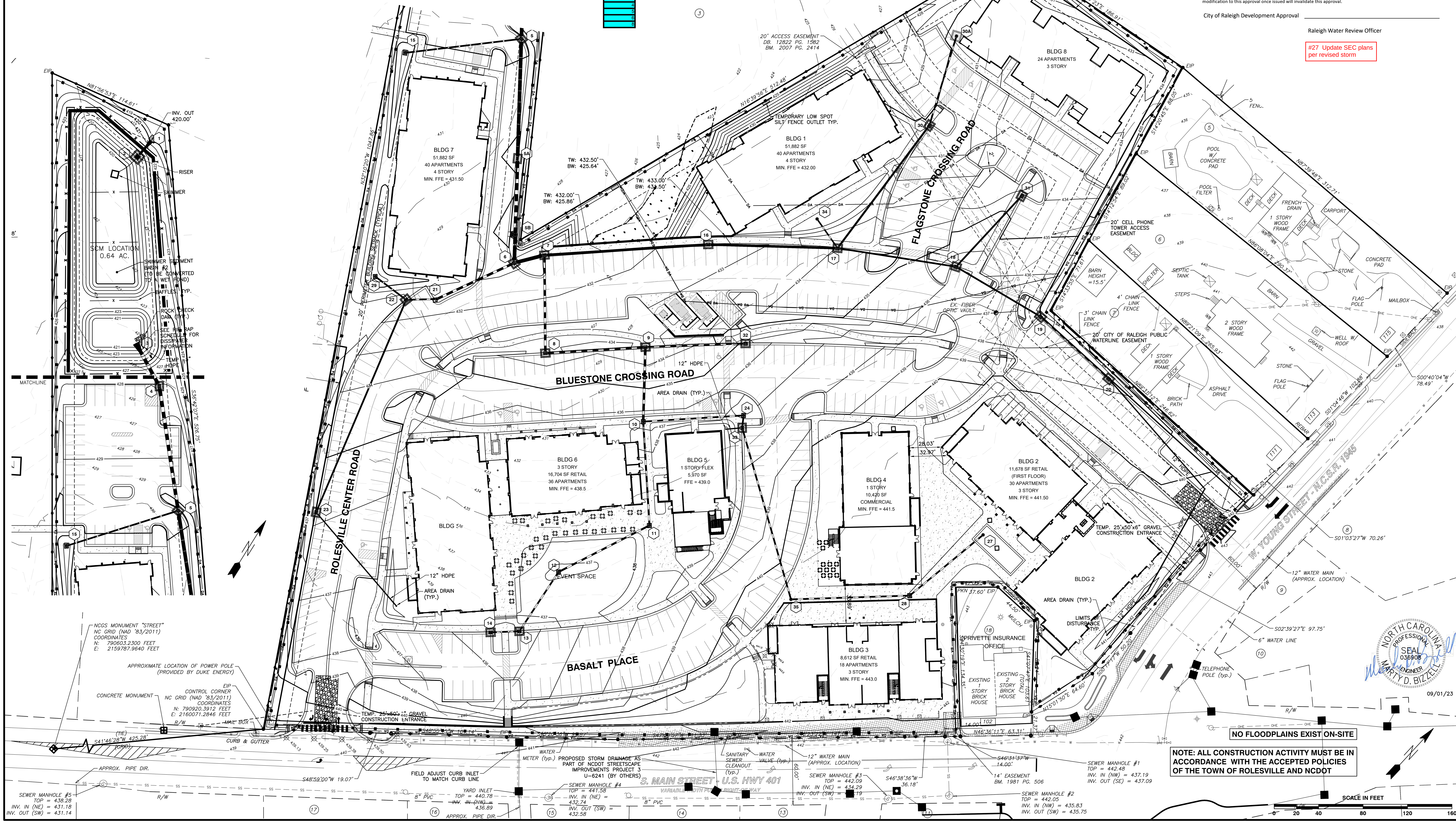

NO FLOODPLAINS EXIST ON-SITE

NOTE: ALL CONSTRUCTION ACTIVITY MUST BE IN ACCORDANCE WITH THE ACCEPTED POLICIES OF THE TOWN OF ROLESVILLE AND NCDOT

BNK

BASS, NIXON & KENNEDY, INC.
CONSULTING ENGINEERS
6310 CHAPEL HILL ROAD, SUITE 250, RALEIGH, NC 27607
TELEPHONE: (919)851-4422 FAX: (919)851-8968
CERTIFICATION NUMBERS: NCBELS (C-0110); NCBOLA (C-0267)

NO.	DATE	DESCRIPTION	BY
		REVISIONS	

03-19157	PROGRESS	MRM
JOB NO.	DATE	DRAWN BY

EROSION CONTROL PLAN - STAGE 2

SCALE: 1" = 40' CHK BY:MDB

COBBLESTONE VILLAGE
MIXED USE DEVELOPMENT
TOWN OF ROLESVILLE, WAKE COUNTY, NORTH CAROLINA

SHEET C3.4

TOWN OF ROLESVILLE PROJECT NO.

NOT RELEASED FOR CONSTRUCTION OR BID SOLICITATION

©2019 BASS, NIXON & KENNEDY, INC. EXPRESSLY RESERVES ITS COMMON LAW COPYRIGHT AND OTHER PROPERTY RIGHTS IN THESE PLANS. THESE PLANS ARE NOT TO BE REPRODUCED, CHANGED OR COPIED IN ANY FORM OR MANNER WHATSOEVER, NOR ARE THEY TO BE ASSIGNED TO ANY THIRD PARTY WITHOUT FIRST OBTAINING THE EXPRESSED WRITTEN PERMISSION AND CONSENT OF BASS, NIXON & KENNEDY, INC.

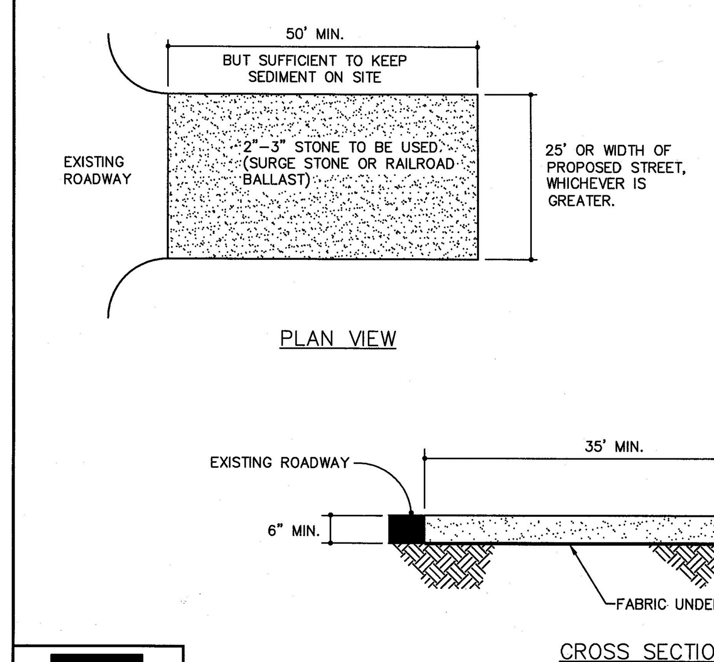

NOTES:

1. PUT SILT FENCE OR TREE PROTECTION FENCE UP TO ENSURE CONSTRUCTION ENTRANCE IS USED.
2. IF CONSTRUCTION ON THE SITES ARE SUCH THAT THE MUD IS NOT REMOVED BY THE VEHICLE TRAVELING OVER THE STONE, THEN THE TIRES OF THE VEHICLES MUST BE WASHED BEFORE ENTERING THE PUBLIC ROAD.
3. MAINTAIN GRAVEL PAD IN A CONDITION TO PREVENT MUD OR SEDIMENT FROM LEAVING CONSTRUCTION SITE. ENTRANCE WILL REQUIRE PERIODIC REMOVAL OF SEDIMENT–LADEN STONE AND REPLACEMENT WITH FRESH STONE.

WAKE COUNTY NORTH CAROLINA
EFFECTIVE: 01/31/08

STANDARD CONSTRUCTION ENTRANCE

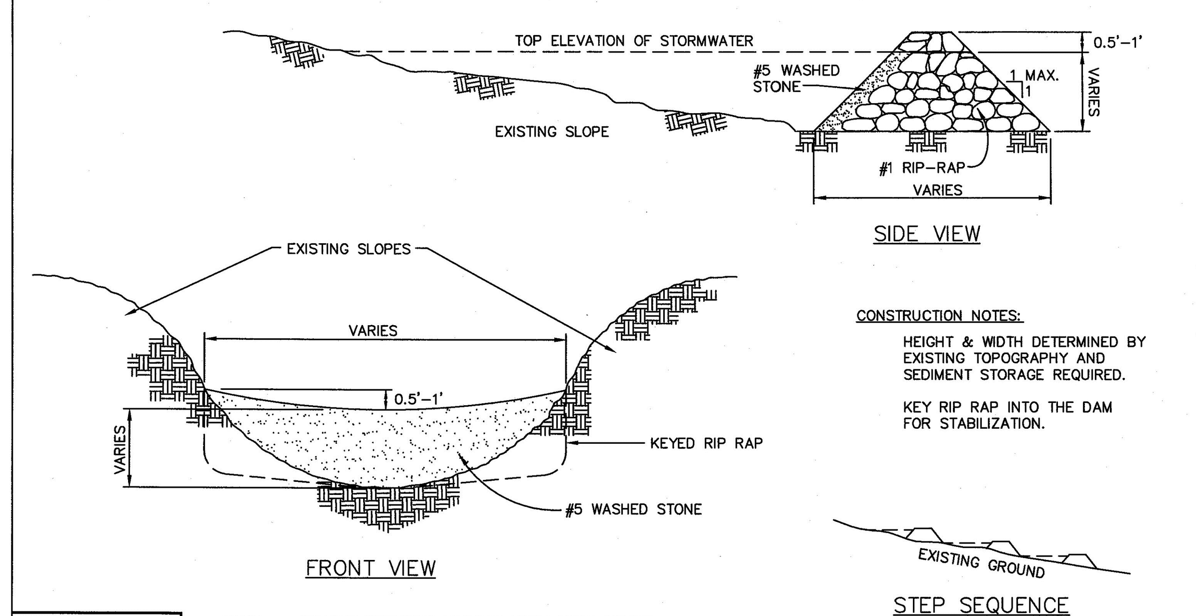

CONSTRUCTION NOTES:

HEIGHT & WIDTH DETERMINED BY EXISTING TOPOGRAPHY AND SEDIMENT STORAGE REQUIRED.

KEY RIP RAP INTO THE DAM FOR STABILIZATION.

NOTE: REMOVE SEDIMENT ACCUMULATION FROM BEHIND CHECK DAMS TO PREVENT DAMAGE TO CHANNEL VEGETATION. FLOW SHOULD BE MAINTAINED THROUGH THE DAM.

WAKE COUNTY NORTH CAROLINA
EFFECTIVE: 01/31/08

STANDARD CHECK DAM

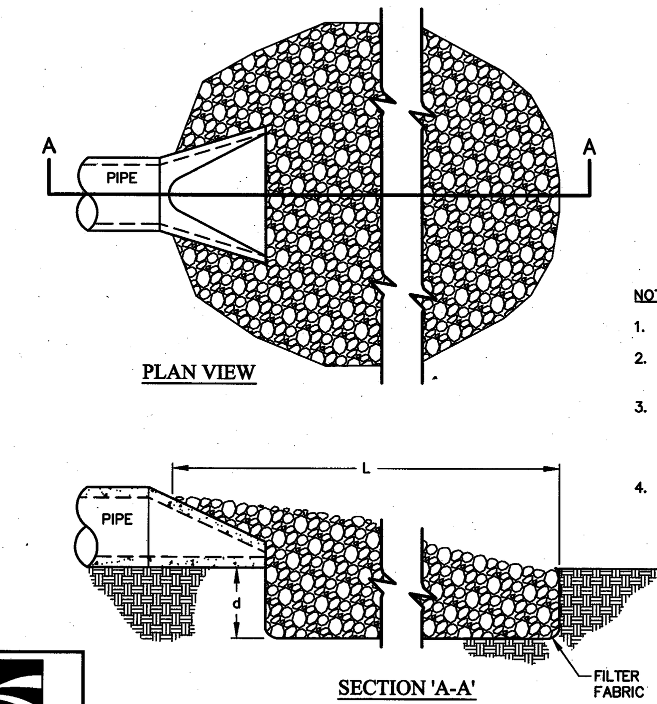

NOTES:

1. L = THE LENGTH OF THE RIPRAP APRON.
2. d = 1.5 TIMES THE MAXIMUM STONE DIAMETER BUT NOT LESS THAN 6" (INCHES).
3. IN A WELL–DEFINED CHANNEL EXTEND THE APRON UP THE CHANNEL BANKS TO AN ELEVATION OF 6" (INCHES) ABOVE THE MAXIMUM TAILWATER DEPTH OR TO THE TOP OF THE BANK, WHICHEVER IS LESS.
4. A FILTER BLANKET OR FILTER FABRIC SHOULD BE INSTALLED BETWEEN THE RIPRAP AND SOIL FOUNDATION.

WAKE COUNTY NORTH CAROLINA
EFFECTIVE: 01/31/08

STANDARD PIPE OUTLET TO WELL-DEFINED CHANNEL

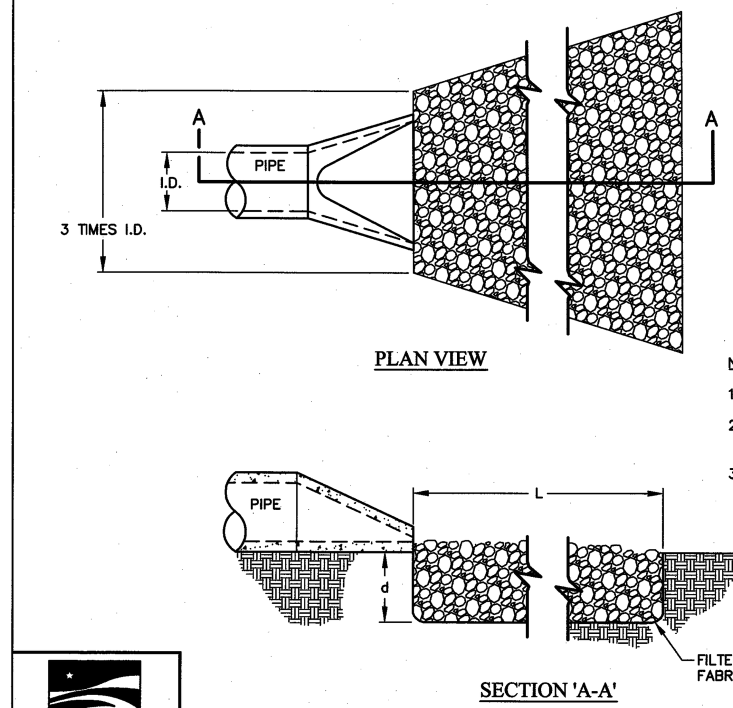

NOTES:

1. L = THE LENGTH OF THE RIPRAP APRON.
2. d = 1.5 TIMES THE MAXIMUM STONE DIAMETER BUT NOT LESS THAN 6" (INCHES).
3. A FILTER BLANKET OR FILTER FABRIC SHOULD BE INSTALLED BETWEEN THE RIPRAP AND SOIL FOUNDATION.

WAKE COUNTY NORTH CAROLINA
EFFECTIVE: 01/31/08

STANDARD PIPE OUTLET TO FLAT AREA
NO WELL-DEFINED CHANNEL

NOTES:

1. TEMPORARY DIVERSION DITCH TO BE USED TO INTERCEPT FLOW AND/OR DIVERT TO A SEDIMENT CONTROL MEASURE OR BMP.
2. SILT SHALL BE REMOVED WHEN DITCH IS ONE–HALF FULL.
3. DITCH SHALL BE RECONSTRUCTED WHEN DAMAGED BY EQUIPMENT OR COVERED BY FILL.
4. STABILIZE DIVERSION DITCH BERM WITH TEMPORARY SEEDING, MULCH WITH TAC, AND/OR EROSION CONTROL NETTING.

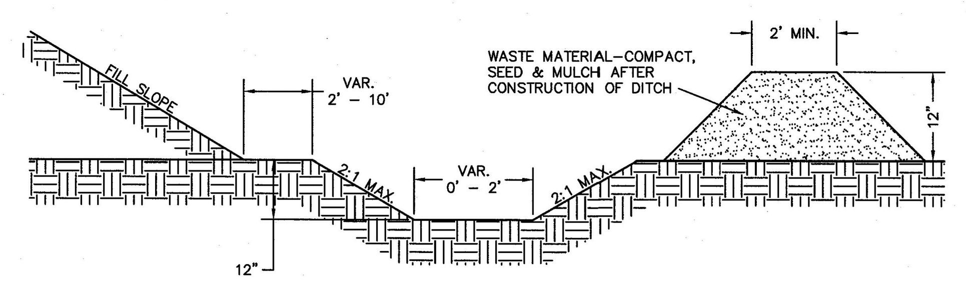

WAKE COUNTY NORTH CAROLINA
EFFECTIVE: 01/31/08

STANDARD TEMPORARY DIVERSION DITCH

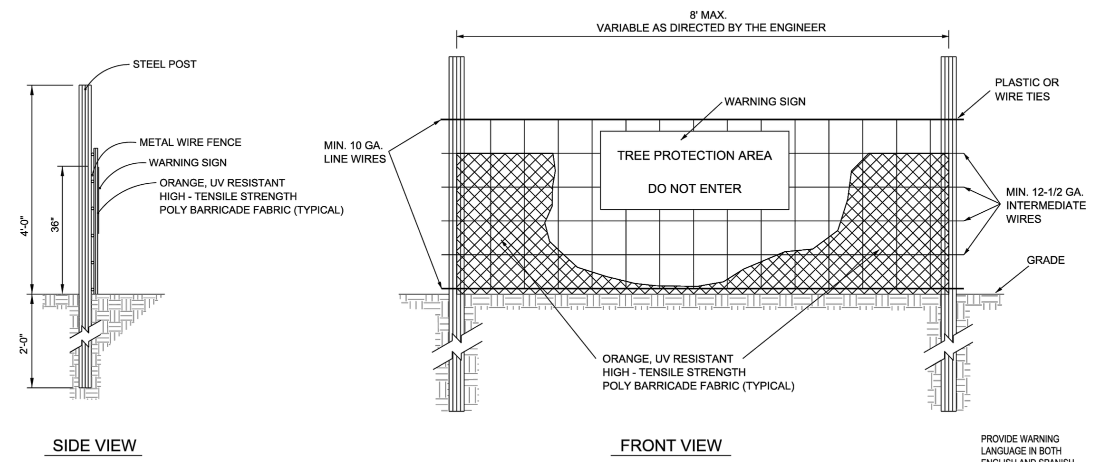

NOTE: FOR TREE PROTECTION ONLY

CITY OF RALEIGH
STANDARD DETAIL
REVISIONS
DATE: 8/2020
NOT TO SCALE
STANDARD TREE PROTECTION DETAIL
TPP-01

NOTES:

1. TREE PROTECTION FENCING MUST BE INSTALLED AT A MINIMUM RADIUS OF THE CRITICAL ROOT ZONE (SEE DETAIL TPP-02 FOR EXAMPLES)
2. THE TREE PROTECTION FENCING MUST REMAIN IN PLACE FOR THE DURATION OF THE PROJECT UNLESS OTHERWISE APPROVED BY URBAN FORESTRY STAFF.
3. APPROVED IMPACT PROTECTION DEVICES MUST BE REMOVED AFTER CONSTRUCTION WHEN APPLICABLE.
4. SIGNS SHALL BE PLACED AT 50' MAXIMUM INTERVALS. PLACE A SIGN AT EACH END OF LINEAR TREE PROTECTION AND 50' ON CENTER FOR THE REMAINDER
5. FOR TREE PROTECTION AREAS LESS THAN 200' IN PERIMETER, PROVIDE NO LESS THAN ONE SIGN PER PROTECTED AREA.
6. ATTACH SIGNS SECURELY TO FENCE POSTS AND FABRIC.
7. ADDITIONAL SIGNS MAY BE REQUIRED BY CITY OF RALEIGH BASED ON ACTUAL FIELD CONDITIONS.
8. SIGNS ARE TO BE MADE OF DURABLE, WEATHERPROOF MATERIAL WITH LETTERS A MINIMUM OF 2 1/2" HIGH, CLEARLY LEGIBLE AND SPACED AS SHOWN.

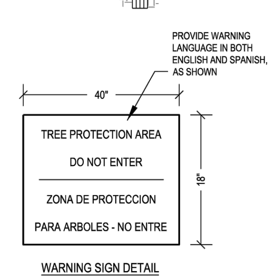

CONTACT INFORMATION:
CITY OF RALEIGH PARKS, RECREATION AND CULTURAL RESOURCES DEPARTMENT
URBAN FORESTER:
TREES@RALEIGHNC.GOV
WWW.RALEIGHNC.GOV

IN DITCHES, APPLY NETTING PARALLEL TO DIRECTION OF FLOW. DO NOT JOIN STRIPS IN CENTER OF DITCH.

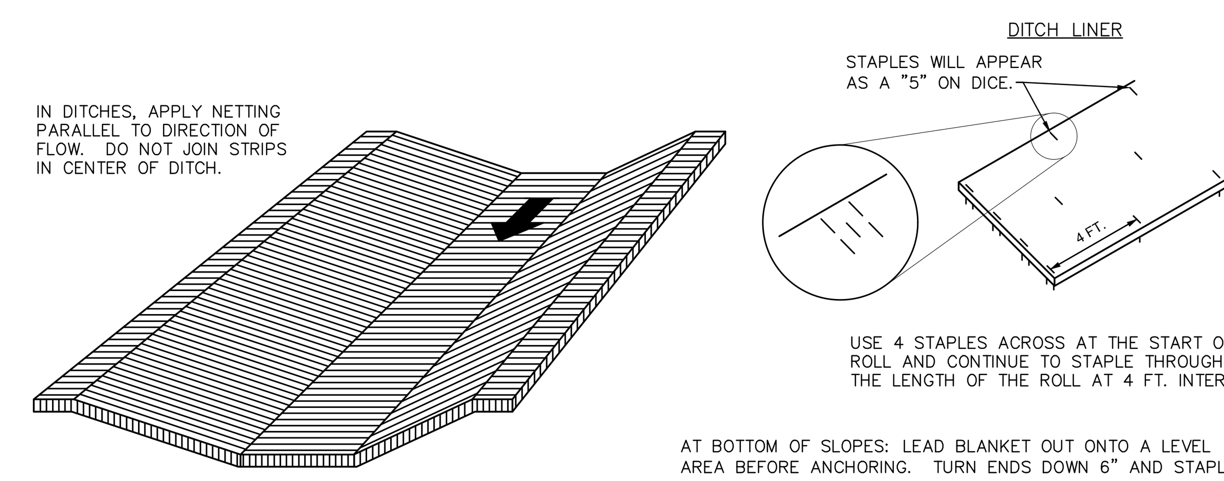

USE 4 STAPLES ACROSS AT THE START OF EACH ROLL AND CONTINUE TO STAPLE THROUGHOUT THE LENGTH OF THE ROLL AT 4 FT. INTERVALS.

AT BOTTOM OF SLOPES: LEAD BLANKET OUT ONTO A LEVEL AREA BEFORE ANCHORING. TURN ENDS DOWN 6" AND STAPLE.

ROLLING: AFTER INSTALLATION, STAPLING, AND SEEDING, BLANKET SHOULD BE ROLLED TO INSURE FIRM CONTACT BETWEEN BLANKET AND SOIL.

MAINTENANCE: ALL BLANKETS SHOULD BE INSPECTED PERIODICALLY, ESPECIALLY AFTER RAINSTORMS, TO CHECK FOR RILL EROSION. WHERE EROSION IS OBSERVED, ADDITIONAL BLANKETS SHOULD BE APPLIED. BLANKETS SHOULD BE INSPECTED AFTER RAINSTORMS FOR DISLOCATION OR FAILURE IF WASHOUTS OR BREAKAGE OCCUR, RE–INSTALL BLANKETS AS NECESSARY AFTER REPAIRING DAMAGE TO THE SLOPE. INSPECTIONS SHOULD TAKE PLACE UNTIL GRASSES ARE FIRMLY ESTABLISHED. WHERE MULCH IS USED IN CONJUNCTION WITH ORNAMENTAL PLANTINGS, INSPECT PERIODICALLY THROUGHOUT THE YEAR TO DETERMINE IF MULCH IS MAINTAINING COVERAGE OF THE SOIL SURFACE. REPAIR AS NEEDED.

STABILIZING CHANNEL WITH EXCELSIOR BLANKET

SCALE: NTS

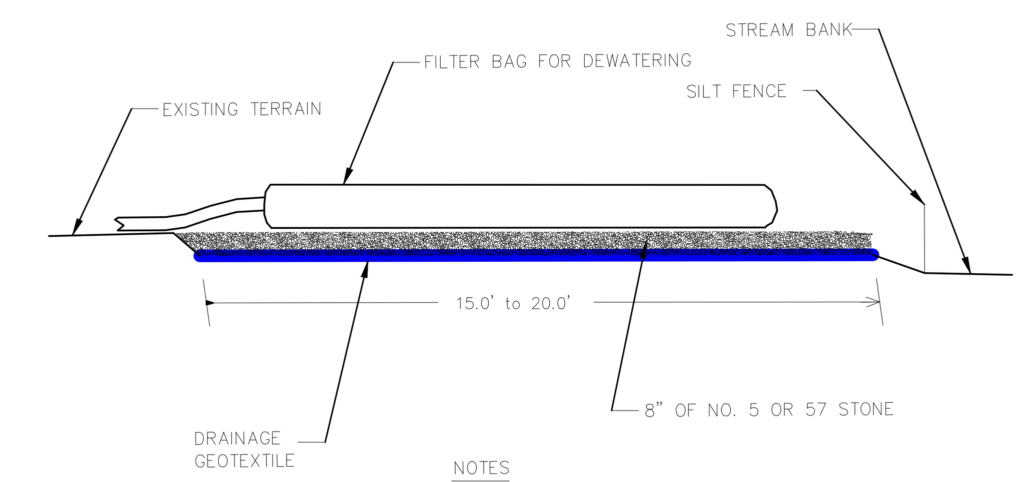

NOTES

PROVIDE STABILIZED OUTLET TO STREAM BANK. WOOD PALLETS MAY BE USED IN LIEU OF STONE AND GEOTEXTILE AS DIRECTED. A SUFFICIENT NUMBER OF PALLETS MUST BE PROVIDED TO ELEVATE THE ENTIRE FILTER BAG FOR DEWATERING ABOVE NATURAL GROUND.

NOT TO SCALE

WAKE COUNTY NORTH CAROLINA
EFFECTIVE: 01/31/08

STANDARD FILTER BAG FOR DEWATERING ACTIVITIES

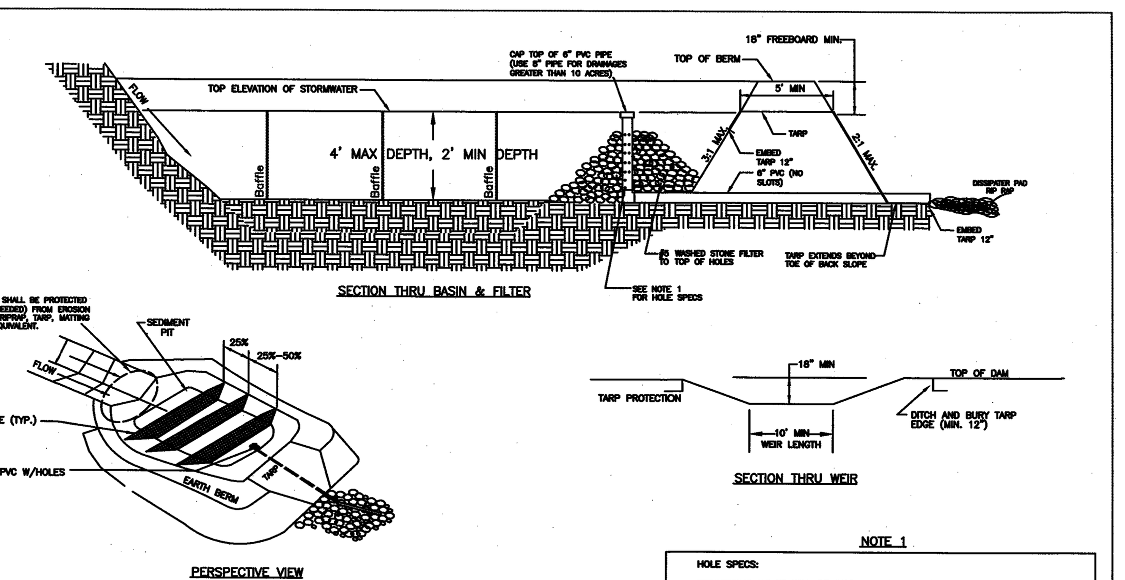

GENERAL NOTES

1. DRAW DOWN RISER & BARREL SHALL BE 6" SCH. 40 PVC WITH CLEAN–OUT CAP AND 3/4" HOLES. SEE NOTE 1 FOR NUMBER AND SPACING OF HOLES.
2. THE TARP USED TO PROTECT THE WEIR SHALL BE THE WIDTH SPECIFIED. THE LENGTH OF THE TARP SHALL BE ACCORDING TO AVAILABLE SUPPLY. IF MULTIPLE TARPS ARE TO BE USED, THEN TARPS SHALL BE OVERLAPPED AT LEAST 12". THE UPSTREAM 12" TARP SHALL OVERLAP THE DOWNSTREAM TARP. THE TARP SHALL BE 50 MIL. HEAVY DUTY SILVER TARPAULINS OR EQUIVALENT FOR U.V. RESISTANCE.
3. MAINTENANCE: SEDIMENT TO BE REMOVED AND PROPERLY DISPOSED OF WHEN BASIN IS HALF FULL. GRAVEL FILTER AROUND RISER SHOULD BE REPLACED AS NEEDED TO ENSURE DEWATERING.

NOTE 1

HOLE SPECS:

DEWATERING HOLES WILL BE INSTALLED IN SETS OF HORIZONTAL RINGS. THE FIRST SET OF HOLES WILL BE SET 6 INCHES FROM THE BOTTOM OF THE RISER. RINGS WILL CONTINUE UP THE RISER IN INTERVALS OF 3 INCHES. HOLES WILL BE 3/4 INCH IN DIAMETER AND WILL BE SPACED EQUALLY AROUND THE RISER. THE NUMBER OF HOLES PER RING WILL EQUAL TO THE DRAINAGE AREA.

EXAMPLE
A BASIN DRAINING 2.0 ACRES SHOULD HAVE 2 HOLES PER RING EVERY 3 INCHES ON THE RISER PIPE. THE FIRST RING (2 HOLES) WILL BE SET 6 INCHES FROM THE BOTTOM OF THE RISER.

NOTE: ROUND DRAINAGE AREA TO THE NEAREST WHOLE NUMBER TO DETERMINE NUMBER OF HOLES.

WAKE COUNTY NORTH CAROLINA
EFFECTIVE: 01/31/08

STANDARD CUSTOM BASIN

CITY OF RALEIGH - PLANS AUTHORIZED FOR CONSTRUCTION

Electronic Approval: This approval is being issued electronically. This approval is valid only upon the signature of a City of Raleigh Review Officer below. The City will retain a copy of the approved plans. Any work authorized by this approval must proceed in accordance with the plans kept on file with the City. This electronic approval may not be edited once issued. Any modification to this approval once issued will invalidate this approval.

City of Raleigh Development Approval ______________________

Raleigh Water Review Officer

NORTH CAROLINA PROFESSIONAL SEAL 036908 ENGINEER MARTY D. BIZZELL

09/01/23

BNK
BASS, NIXON & KENNEDY, INC.
CONSULTING ENGINEERS
6310 CHAPEL HILL ROAD, SUITE 250, RALEIGH, NC 27607
TELEPHONE: (919)851-4422 FAX: (919)851-8968
CERTIFICATION NUMBERS: NCBELS (C-0110); NCBOLA (C-0267)

NO.	DATE	DESCRIPTION	BY

REVISIONS

03-19157 PROGRESS MRM
JOB NO. DATE DRAWN BY

EROSION CONTROL DETAILS

SCALE: N.T.S. CHK BY: MDB

COBBLESTONE VILLAGE
MIXED USE DEVELOPMENT
TOWN OF ROLESVILLE, WAKE COUNTY, NORTH CAROLINA

SHEET
C3.5

TOWN OF ROLESVILLE PROJECT NO.

NOT RELEASED FOR CONSTRUCTION OR BID SOLICITATION

©2019 BASS, NIXON & KENNEDY, INC. EXPRESSLY RESERVES ITS COMMON LAW COPYRIGHT AND OTHER PROPERTY RIGHTS IN THESE PLANS. THESE PLANS ARE NOT TO BE REPRODUCED, CHANGED OR COPIED IN ANY FORM OR MANNER WHATSOEVER, NOR ARE THEY TO BE ASSIGNED TO ANY THIRD PARTY WITHOUT FIRST OBTAINING THE EXPRESSED WRITTEN PERMISSION AND CONSENT OF BASS, NIXON & KENNEDY, INC.

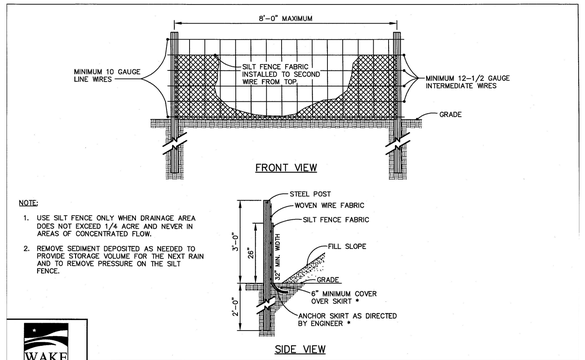

NOTE:
1. USE SILT FENCE ONLY WHEN DRAINAGE AREA DOES NOT EXCEED 1/4 ACRE AND NEVER IN AREAS OF CONCENTRATED FLOW.
2. REMOVE SEDIMENT DEPOSITED AS NEEDED TO PROVIDE STORAGE VOLUME FOR THE NEXT RAIN AND TO REMOVE PRESSURE ON THE SILT FENCE.

WAKE COUNTY NORTH CAROLINA
EFFECTIVE: 01/31/08

STANDARD TEMPORARY SILT FENCE

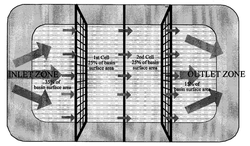

NOTES:
1. BAFFLE MATERIAL SHOULD BE SECURED AT THE BOTTOM AND SIDES USING STAPLES OR BY TRENCHING AS FOR SILT FENCE.
2. MOST OF THE SEDIMENT WILL ACCUMULATE IN THE FIRST BAY, WHICH SHOULD BE READILY ACCESSIBLE FOR MAINTENANCE.
3. PROVIDE 3 BAFFLES (USE TWO IF LESS THAN 20 FEET IN LENGTH). PROVIDE 5 BAFFLES FOR DRAINAGE AREAS GREATER THAN 10 ACRES.
4. BAFFLE SHALL BE 700 G/M2 COIR EROSION BLANKET.
5. TOPS OF BAFFLES SHOULD BE 2 INCHES LOWER THAN THE TOP OF THE BERMS
6. INSPECT BAFFLES FOR REPAIR ONCE A WEEK AND AFTER EACH RAINFALL

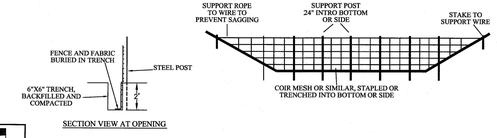

WAKE COUNTY NORTH CAROLINA
EFFECTIVE: 01/31/08

STANDARD BAFFLES DETAIL

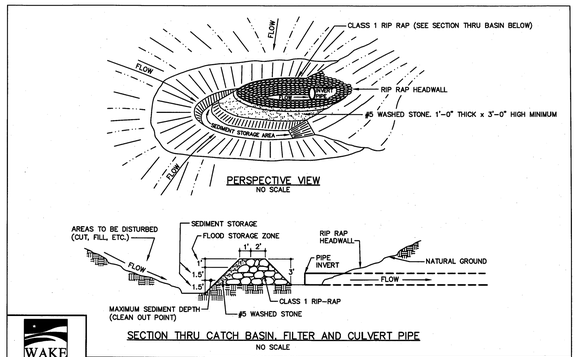

WAKE COUNTY NORTH CAROLINA
EFFECTIVE: 01/31/08

STANDARD HORSESHOE INLET PROTECTION

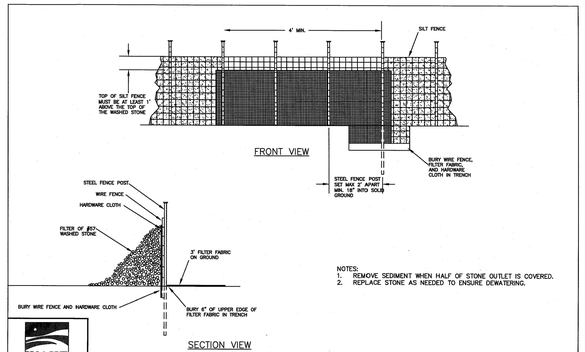

NOTES:
1. REMOVE SEDIMENT WHEN HALF OF STONE OUTLET IS COVERED.
2. REPLACE STONE AS NEEDED TO ENSURE DEWATERING.

WAKE COUNTY NORTH CAROLINA
EFFECTIVE: 01/31/08

STANDARD SILT FENCE OUTLET

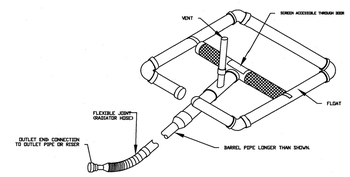

WAKE COUNTY NORTH CAROLINA
EFFECTIVE: 01/31/08

STANDARD SKIMMER DETAIL

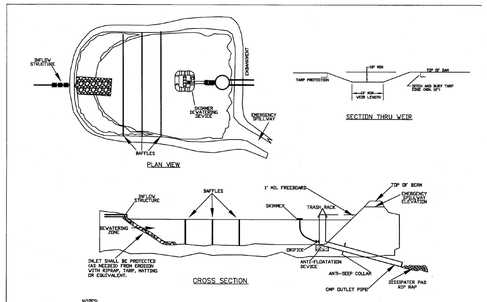

NOTES:
1) BASIN SHOULD BE CLEANED OUT WHEN CAPACITY REACHES AN ELEVATION REPRESENTING THAT THE BASIN IS HALF-FULL.
2) THE TARP USED TO PROTECT THE WEIR SHALL BE THE WIDTH SPECIFIED. THE LENGTH OF THE TARP SHALL BE ACCORDING TO AVAILABLE SUPPLY. IF MULTIPLE TARPS ARE TO BE USED, THEN TARPS SHALL BE OVERLAPPED AT LEAST 12". THE UPSTREAM 12" TARP SHALL OVERLAP THE DOWNSTREAM TARP. THE TARP SHALL BE 50 MIL. HEAVY DUTY SILVER TARPAULINS OR EQUIVALENT. THE TARP SHALL OVERLAP THE DOWNSTREAM TARP. THE TARP SHALL BE 50 MIL. HEAVY DUTY SILVER TARPAULINS OR EQUIVALENT. THE TARP SHALL OVERLAP
3) PROVIDE A MINIMUM OF THREE POROUS BAFFLES TO EVENLY DISTRIBUTE FLOW ACROSS THE BASIN, REDUCING TURBULENCE.
4) BAFFLE MATERIAL MUST BE SECURED AT THE BOTTOM AND SIDES USING STAPLES OR BY TRENCHING AS FOR A SILT FENCE.
5) MOST OF THE SEDIMENT WILL ACCUMULATE IN THE FIRST BAY, SO THIS SHOULD BE READILY AVAILABLE FOR MAINTENANCE.
6) DURING THE CONSTRUCTION PHASE OF THE PROJECT, PERMANENT STORMWATER RISER SHALL ONLY DEWATER FROM THE TOP OF PIPE.
7) POND SHALL NOT BE CONVERTED FOR STORMWATER USE UNTIL APPROVED BY ENVIRONMENTAL ENGINEER.

WAKE COUNTY NORTH CAROLINA
EFFECTIVE: 01/31/08

STANDARD SKIMMER ATTACHED TO PERMANENT RISER

SEEDING INFORMATION:

SEEDBED PREPARATION

1. CHISEL COMPACTED AREAS AND SPREAD TOPSOIL 3 INCHES DEEP OVER ADVERSE SOIL CONDITIONS, IF AVAILABLE.
2. RIP THE ENTIRE AREA TO 6 INCHES DEPTH.
3. REMOVE ALL LOOSE ROCK, ROOTS, AND OTHER OBSTRUCTIONS LEAVING SURFACE REASONABLY SMOOTH AND UNIFORM.
4. APPLY AGRICULTURAL LIME, FERTILIZER, AND SUPER PHOSPHATE UNIFORMLY AND MIX WITH SOIL (SEE BELOW*).
5. CONTINUE TILLAGE UNTIL A WELL PULVERIZED FIRM, REASONABLY UNIFORM SEEDBED IS PREPARED 4 TO 6 INCHES DEEP.
6. SEED ON A FRESHLY PREPARED SEEDBED AND COVER LIGHTLY WITH SEEDING EQUIPMENT OR CULTIPACK AFTER SEEDING.
7. MULCH IMMEDIATELY AFTER SEEDING AND ANCHOR MULCH.
8. INSPECT ALL SEEDED AREAS AND MAKE NECESSARY REPAIRS OR RESEEDINGS WITHIN THE PLANTING SEASON, IF POSSIBLE. IF STAND SHOULD BE OVER 6INS DAMAGED, REESTABLISH FOLLOWING ORIGINAL LIME, FERTILIZER AND SEEDING RATES.
9. CONSULT CONSERVATION INSPECTOR ON MAINTENANCE TREATMENT AND FERTILIZATION AFTER PERMANENT COVER IS ESTABLISHED.

* APPLY: AGRICULTURAL LIMESTONE – 2 TONS/ACRE
FERTILIZER – 10–10–10 ANALYSIS AT 800–1,000 LBS./ACRE.
SUPER PHOSPHATE – 500 LBS.ORE OF 20% ANALYSIS SUPER PHOSPHATE
MULCH – 2 TONS (APPROX. 80 BALES) SMALL SMALL GRAIN STRAW/ACRE
ANCHOR –TACK WITH LIQUID ASPHALT AT 400 GAL./ACRE OR EMULSIFIED ASPHALT AT 300 GALLONS/ACRE

SEEDING SCHEDULE

PERMANENT SEEDING – SHOULDERS, SIDE DITCHES, SLOPES (MAX. 3:1)

DATE	TYPE	PLANTING RATE
AUG. 15 – NOV. 1	TALL FESCUE	200 LBS./ACRE
NOV. 1 – MAR.1	TALL FESCUE	200 LBS./ACRE
	AND ABRUZZI RYE *(NURSE CROP)	25 LBS./ACRE
MAR. 1 – APR. 15	TALL FESCUE	200 LBS./ACRE
APR. 15 – JUN. 30	HULLED COMMON BERMUDAGRASS	15 LBS./ACRE

PERMANENT SEEDING – SLOPES (3:1 TO 2:1)

AUG. 15–NOV.1	TALL FESCUE	200 LBS/ACRE
	AND SERICEA LESPEDEZA (UNHULLED, UNSCARIFIED)	60 TO 70 LBS/ACRE
NOV. 1–MAR.1	TALL FESCUE	200 LBS/ACRE
	AND SERICEA LESPEDEZA (UNHULLED, UNSCARIFIED)	60 TO 70 LBS/ACRE
	AND ABRUZZI RYE	25 LBS/ACRE
MAR. 1–JUNE 1	TALL FESCUE	200 LBS/ACRE
	AND SERICEA LESPEDEZA (SCARIFIED)	40 TO 50 LBS/ACRE
MAR. 15–JUNE 30	WEEPING LOVEGRASS	10 LBS/ACRE
	AND SERICEA LESPEDEZA (SCARIFIED)	40 TO 50 LBS/ACRE
MAR. 15–JUNE 30	HULLED COMMON BERMUDAGRASS	15 LBS/ACRE
	AND SERICEA LESPEDEZA (SCARIFIED)	40 TO 50 LBS/ACRE

TEMPORARY SEEDING

JUNE 1–SEPT. 1	TALL FESCUE	200 LBS/ACRE
	AND BROWNTOP MILLET *(NURSE CROP)	35 LBS/ACRE
	OR SORGHUM–SUDAN HYBRIDS *(NURSE CROP)	30 LBS/ACRE

CONSULT CONSERVATION ENGINEER OR SOIL CONSERVATION SERVICE FOR ADDITIONAL INFORMATION CONCERNING OTHER ALTERNATIVES FOR VEGETATION OF DENUDED AREAS. THE ABOVE VEGETATION RATES ARE THOSE WHICH DO WELL UNDER LOCAL CONDITIONS; OTHER SEEDING RATE COMBINATIONS ARE POSSIBLE.

*NURSE CROP/TEMPORARY–RESEED ACCORDING TO OPTIMUM SEASON FOR DESIRED PERMANENT VEGETATION. DO NOT ALLOW TEMPORARY COVER TO GROW OVER 12" IN HEIGHT BEFORE MOWING, OTHERWISE FESCUE MAY BE SHADED OUT.

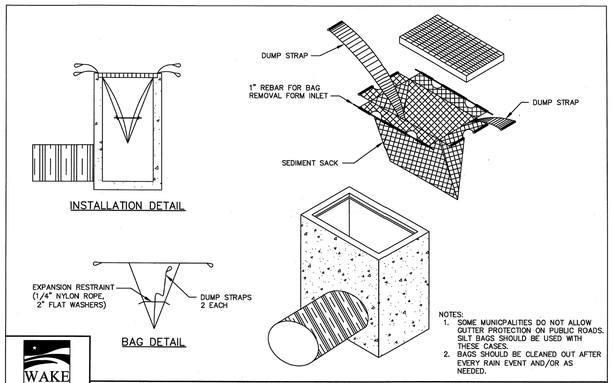

NOTES:
1. SOME MUNICPALITIES DO NOT ALLOW GUTTER PROTECTION ON PUBLIC ROADS. SILT BAGS SHOULD BE USED WITH THESE CASES.
2. BAGS SHOULD BE CLEANED OUT AFTER EVERY RAIN EVENT AND/OR AS NEEDED.

WAKE COUNTY NORTH CAROLINA
EFFECTIVE: 01/31/08

STANDARD SILT BAG - INLET SEDIMENT CONTROL DEVICE

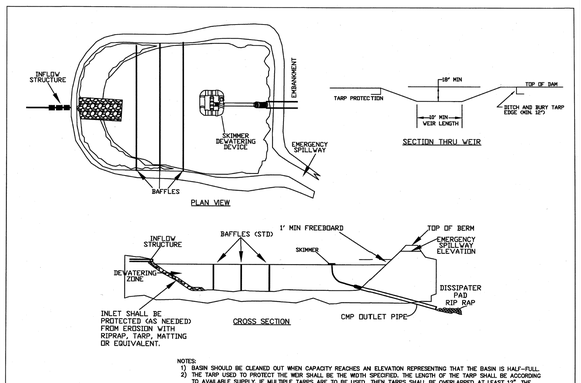

NOTES:
1) BASIN SHOULD BE CLEANED OUT WHEN CAPACITY REACHES AN ELEVATION REPRESENTING THAT THE BASIN IS HALF-FULL.
2) THE TARP USED TO PROTECT THE WEIR SHALL BE THE WIDTH SPECIFIED. THE LENGTH OF THE TARP SHALL BE ACCORDING TO AVAILABLE SUPPLY. IF MULTIPLE TARPS ARE TO BE USED, THEN TARPS SHALL BE OVERLAPPED AT LEAST 12". THE UPSTREAM 12" TARP SHALL OVERLAP THE DOWNSTREAM TARP. THE TARP SHALL BE 50 MIL. HEAVY DUTY SILVER TARPAULINS OR EQUIVALENT. THE TARP SHALL OVERLAP
3) PROVIDE A MINIMUM OF THREE POROUS BAFFLES TO EVENLY DISTRIBUTE FLOW ACROSS THE BASIN, REDUCING TURBULENCE.
4) BAFFLE MATERIAL MUST BE SECURED AT THE BOTTOM AND SIDES USING STAPLES OR BY TRENCHING AS FOR A SILT FENCE.
5) MOST OF THE SEDIMENT WILL ACCUMULATE IN THE FIRST BAY, SO THIS SHOULD BE READILY AVAILABLE FOR MAINTENANCE.
6) DURING THE CONSTRUCTION PHASE OF THE PROJECT, PERMANENT STORMWATER RISER SHALL ONLY DEWATER FROM THE TOP OF PIPE.
7) POND SHALL NOT BE CONVERTED FOR STORMWATER USE UNTIL APPROVED BY ENVIRONMENTAL ENGINEER.

WAKE COUNTY NORTH CAROLINA
EFFECTIVE: 01/31/08

STANDARD SKIMMER BASIN

CITY OF RALEIGH - PLANS AUTHORIZED FOR CONSTRUCTION

Electronic Approval: This approval is being issued electronically. This approval is valid only upon the signature of a City of Raleigh Review Officer below. The City will retain a copy of the approved plans. Any work authorized by this approval must proceed in accordance with the plans kept on file with the City. This electronic approval may not be edited once issued. Any modification to this approval once issued will invalidate this approval.

City of Raleigh Development Approval _____

Raleigh Water Review Officer

NORTH CAROLINA PROFESSIONAL SEAL 038808 ENGINEER MARTY D. BIZZELL

09/01/23

BNK

BASS, NIXON & KENNEDY, INC.
CONSULTING ENGINEERS
6310 CHAPEL HILL ROAD, SUITE 250, RALEIGH, NC 27607
TELEPHONE: (919)851-4422 FAX: (919)851-8968
CERTIFICATION NUMBERS: NCBELS (C-0110); NCBOLA (C-0267)

NO.	DATE	DESCRIPTION	BY
		REVISIONS	

PROGRESS MRM
DATE DRAWN BY
03-19157
JOB NO.

EROSION CONTROL DETAILS

SCALE: N.T.S. CHK BY: MDB

COBBLESTONE VILLAGE
MIXED USE DEVELOPMENT
TOWN OF ROLESVILLE, WAKE COUNTY, NORTH CAROLINA

SHEET C3.6

NOT RELEASED FOR CONSTRUCTION OR BID SOLICITATION

TOWN OF ROLESVILLE PROJECT NO.

©2019 BASS, NIXON & KENNEDY, INC. EXPRESSLY RESERVES ITS COMMON LAW COPYRIGHT AND OTHER PROPERTY RIGHTS IN THESE PLANS. THESE PLANS ARE NOT TO BE REPRODUCED, CHANGED OR COPIED IN ANY FORM OR MANNER WHATSOEVER, NOR ARE THEY TO BE ASSIGNED TO ANY THIRD PARTY WITHOUT FIRST OBTAINING THE EXPRESSED WRITTEN PERMISSION AND CONSENT OF BASS, NIXON & KENNEDY, INC.

GROUND STABILIZATION AND MATERIALS HANDLING PRACTICES FOR COMPLIANCE WITH THE NCG01 CONSTRUCTION GENERAL PERMIT

Implementing the details and specifications on this plan sheet will result in the construction activity being considered compliant with the Ground Stabilization and Materials Handling sections of the NCG01 Construction General Permit (Sections E and F, respectively). The permittee shall comply with the Erosion and Sediment Control plan approved by the delegated authority having jurisdiction. All details and specifications shown on this sheet may not apply depending on site conditions and the delegated authority having jurisdiction.

Temporary and Permanent Groundcover*

STABILIZATION TIMEFRAMES
(Effective Aug. 3, 2011)

Site Area Description	Stabilization	Timeframe Exceptions
Perimeter dikes, swales, ditches, slopes	7 days	None
High Quality Water (HQW) Zones	7 days	None
Slopes steeper than 3:1	7 days	If slopes are 10' or less in length and are not steeper than 2:1, 14 days are allowed.
Slopes 3:1 or flatter	14 days	7 days for slopes greater than 50' in length.
All other areas with slopes flatter than 4:1	14 days	None, except for perimeters and HQW Zones.

*-For Falls Lake watershed, in disturbed areas where grading activities are incomplete, provide temporary groundcover no later than seven (7) days for slopes steeper than 3:1; ten (10) days for slopes equal to or flatter than 3:1; fourteen (14) days for areas with no slope.

GROUND STABILIZATION SPECIFICATION

Stabilize the ground sufficiently so that rain will not dislodge the soil. Use one of the techniques in the table below:

Temporary Stabilization	Permanent Stabilization
• Temporary grass seed covered with straw or other mulches and tackifiers • Hydroseeding • Rolled erosion control products with or without temporary grass seed • Appropriately applied straw or other mulch • Plastic sheeting	• Permanent grass seed covered with straw or other mulches and tackifiers • Geotextile fabrics such as permanent soil reinforcement matting • Hydroseeding • Shrubs or other permanent plantings covered with mulch • Uniform and evenly distributed ground cover sufficient to restrain erosion • Structural methods such as concrete, asphalt or retaining walls

POLYACRYLAMIDES (PAMS) AND FLOCCULANTS

1. Select flocculants that are appropriate for the soils being exposed during construction, selecting from the *NC DWR List of Approved PAMS/Flocculants*.
2. Apply flocculants at or before the inlets to Erosion and Sediment Control Measures.
3. Apply flocculants at the concentrations specified in the *NC DWR List of Approved PAMS/Flocculants* and in accordance with the manufacturer's instructions.
4. Provide ponding area for containment of treated Stormwater before discharging offsite.
5. Store flocculants in leak-proof containers that are kept under storm-resistant cover or surrounded by secondary containment structures.

NORTH CAROLINA *Environmental Quality*

EQUIPMENT AND VEHICLE MAINTENANCE

1. Maintain vehicles and equipment to prevent discharge of fluids.
2. Provide drip pans under any stored equipment.
3. Identify leaks and repair as soon as feasible, or remove leaking equipment from the project.
4. Collect all spent fluids, store in separate containers and properly dispose as hazardous waste (recycle when possible).
5. Remove leaking vehicles and construction equipment from service until the problem has been corrected.
6. Bring used fuels, lubricants, coolants, hydraulic fluids and other petroleum products to a recycling or disposal center that handles these materials.

LITTER, BUILDING MATERIAL AND LAND CLEARING WASTE

1. Never bury or burn waste. Place litter and debris in approved waste containers.
2. Provide a sufficient number of waste containers on site to manage the quantity of waste produced.
3. Locate waste containers at least 50 feet away from storm drain inlets and surface waters unless no other alternatives are reasonably available.
4. Locate waste containers on areas that do not receive substantial amounts of runoff from upland areas and does not drain directly to a storm drain, stream or wetland.
5. Cover waste containers at the end of each workday and before storm events. Repair or replace damaged waste containers.
6. Anchor all lightweight items in waste containers during times of high winds.
7. Empty waste containers as needed to prevent overflow.
8. Dispose waste off-site at an approved disposal facility.

PAINT AND OTHER LIQUID WASTE

1. Do not dump paint and other liquid waste into storm drains, streams or wetlands.
2. Locate paint washouts at least 50 feet away from storm drain inlets and surface waters unless no other alternatives are reasonably available.
3. Contain liquid wastes in a controlled area.
4. Containment must be labeled, sized and placed appropriately for the needs of site.
5. Prevent the discharge of soaps, solvents, detergents and other liquid wastes from construction sites.

PORTABLE TOILETS

1. Install portable toilets on level ground, at least 50 feet away from storm drains, streams or wetlands unless there is no alternative reasonably available. If 50 foot offset is not attainable, provide relocation of portable toilet behind silt fence or place on a gravel pad and surround with sand bags.
2. Provide staking or anchoring of portable toilets during periods of high winds or in high foot traffic areas.
3. Monitor portable toilets for leaking and properly dispose of any leaked material. Utilize a licensed sanitary waste hauler to remove leaking portable toilets and replace with properly operating unit.

EARTHEN STOCKPILE MANAGEMENT

1. Show stockpile locations on plans. Locate earthen-material stockpile areas at least 50 feet away from storm drain inlets, sediment basins, perimeter sediment controls and surface waters unless it can be shown no other alternatives are reasonably available.
2. Protect stockpile with silt fence installed along toe of slope with a minimum offset of five feet from the toe of stockpile.
3. Provide stable stone access point when feasible.
4. Stabilize stockpile within the timeframes provided on this sheet and in accordance with the approved plan and any additional requirements. Soil stabilization is defined as vegetative, physical or chemical coverage techniques that will restrain accelerated erosion on disturbed soils for temporary or permanent control needs.

ONSITE CONCRETE WASHOUT
STRUCTURE WITH LINER

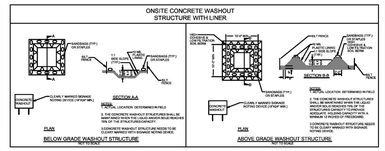

CONCRETE WASHOUTS

1. Do not discharge concrete or cement slurry from the site.
2. Dispose of, or recycle settled, hardened concrete residue in accordance with local and state solid waste regulations and at an approved facility.
3. Manage washout from mortar mixers in accordance with the above item and in addition place the mixer and associated materials on impervious barrier and within lot perimeter silt fence.
4. Install temporary concrete washouts per local requirements, where applicable. If an alternate method or product is to be used, contact your approval authority for review and approval. If local standard details are not available, use one of the two types of temporary concrete washouts provided on this detail.
5. Do not use concrete washouts for dewatering or storing defective curb or sidewalk sections. Stormwater accumulated within the washout may not be pumped into or discharged to the storm drain system or receiving surface waters. Liquid waste must be pumped out and removed from project.
6. Locate washouts at least 50 feet from storm drain inlets and surface waters unless it can be shown that no other alternatives are reasonably available. At a minimum, install protection of storm drain inlet(s) closest to the washout which could receive spills or overflow.
7. Locate washouts in an easily accessible area, on level ground and install a stone entrance pad in front of the washout. Additional controls may be required by the approving authority.
8. Install at least one sign directing concrete trucks to the washout within the project limits. Post signage on the washout itself to identify this location.
9. Remove leavings from the washout when at approximately 75% capacity to limit overflow events. Replace the tarp, sand bags or other temporary structural components when no longer functional. When utilizing alternative or proprietary products, follow manufacturer's instructions.
10. At the completion of the concrete work, remove remaining leavings and dispose of in an approved disposal facility. Fill pit, if applicable, and stabilize any disturbance caused by removal of washout.

HERBICIDES, PESTICIDES AND RODENTICIDES

1. Store and apply herbicides, pesticides and rodenticides in accordance with label restrictions.
2. Store herbicides, pesticides and rodenticides in their original containers with the label, which lists directions for use, ingredients and first aid steps in case of accidental poisoning.
3. Do not store herbicides, pesticides and rodenticides in areas where flooding is possible or where they may spill or leak into wells, stormwater drains, ground water or surface water. If a spill occurs, clean area immediately.
4. Do not stockpile these materials onsite.

HAZARDOUS AND TOXIC WASTE

1. Create designated hazardous waste collection areas on-site.
2. Place hazardous waste containers under cover or in secondary containment.
3. Do not store hazardous chemicals, drums or bagged materials directly on the ground.

NCG01 GROUND STABILIZATION AND MATERIALS HANDLING

EFFECTIVE: 03/01/19

PART III
SELF-INSPECTION, RECORDKEEPING AND REPORTING

SECTION A: SELF-INSPECTION

Self-inspections are required during normal business hours in accordance with the table below. When adverse weather or site conditions would cause the safety of the inspection personnel to be in jeopardy, the inspection may be delayed until the next business day on which it is safe to perform the inspection. In addition, when a storm event of equal to or greater than 1.0 inch occurs outside of normal business hours, the self-inspection shall be performed upon the commencement of the next business day. Any time when inspections were delayed shall be noted in the Inspection Record.

Inspect	Frequency (during normal business hours)	Inspection records must include:
(1) Rain gauge maintained in good working order	Daily	Daily rainfall amounts. If no daily rain gauge observations are made during weekend or holiday periods, and no individual-day rainfall information is available, record the cumulative rain measurement for those un-attended days (and this will determine if a site inspection is needed). Days on which no rainfall occurred shall be recorded as "zero." The permittee may use another rain-monitoring device approved by the Division.
(2) E&SC Measures	At least once per 7 calendar days and within 24 hours of a rain event ≥ 1.0 inch in 24 hours	1. Identification of the measures inspected, 2. Date and time of the inspection, 3. Name of the person performing the inspection, 4. Indication of whether the measures were operating properly, 5. Description of maintenance needs for the measure, 6. Description, evidence, and date of corrective actions taken.
(3) Stormwater discharge outfalls (SDOs)	At least once per 7 calendar days and within 24 hours of a rain event ≥ 1.0 inch in 24 hours	1. Identification of the discharge outfalls inspected, 2. Date and time of the inspection, 3. Name of the person performing the inspection, 4. Evidence of indicators of stormwater pollution such as oil sheen, floating or suspended solids or discoloration, 5. Indication of visible sediment leaving the site, 6. Description, evidence, and date of corrective actions taken.
(4) Perimeter of site	At least once per 7 calendar days and within 24 hours of a rain event ≥ 1.0 inch in 24 hours	If visible sedimentation is found outside site limits, then a record of the following shall be made: 1. Actions taken to clean up or stabilize the sediment that has left the site limits, 2. Description, evidence, and date of corrective actions taken, and 3. An explanation as to the actions taken to control future releases.
(5) Streams or wetlands onsite or offsite (where accessible)	At least once per 7 calendar days and within 24 hours of a rain event ≥ 1.0 inch in 24 hours	If the stream or wetland has increased visible sedimentation or a stream has visible increased turbidity from the construction activity, then a record of the following shall be made: 1. Description, evidence and date of corrective actions taken, and 2. Records of the required reports to the appropriate Division Regional Office per Part III, Section C, Item (2)(a) of this permit.
(6) Ground stabilization measures	After each phase of grading	1. The phase of grading (installation of perimeter E&SC measures, clearing and grubbing, installation of storm drainage facilities, completion of all land-disturbing activity, construction or redevelopment, permanent ground cover). 2. Documentation that the required ground stabilization measures have been provided within the required timeframe or an assurance that they will be provided as soon as possible.

NOTE: The rain inspection resets the required 7 calendar day inspection requirement.

PART III
SELF-INSPECTION, RECORDKEEPING AND REPORTING

SECTION B: RECORDKEEPING

1. E&SC Plan Documentation

The approved E&SC plan as well as any approved deviation shall be kept on the site. The approved E&SC plan must be kept up-to-date throughout the coverage under this permit. The following items pertaining to the E&SC plan shall be kept on site and available for inspection at all times during normal business hours.

Item to Document	Documentation Requirements
(a) Each E&SC measure has been installed and does not significantly deviate from the locations, dimensions and relative elevations shown on the approved E&SC plan.	Initial and date each E&SC measure on a copy of the approved E&SC plan or complete, date and sign an inspection report that lists each E&SC measure shown on the approved E&SC plan. This documentation is required upon the initial installation of the E&SC measures or if the E&SC measures are modified after initial installation.
(b) A phase of grading has been completed.	Initial and date a copy of the approved E&SC plan or complete, date and sign an inspection report to indicate completion of the construction phase.
(c) Ground cover is located and installed in accordance with the approved E&SC plan.	Initial and date a copy of the approved E&SC plan or complete, date and sign an inspection report to indicate compliance with approved ground cover specifications.
(d) The maintenance and repair requirements for all E&SC measures have been performed.	Complete, date and sign an inspection report.
(e) Corrective actions have been taken to E&SC measures.	Initial and date a copy of the approved E&SC plan or complete, date and sign an inspection report to indicate the completion of the corrective action.

2. Additional Documentation to be Kept on Site

In addition to the E&SC plan documents above, the following items shall be kept on the site and available for inspectors at all times during normal business hours, unless the Division provides a site-specific exemption based on unique site conditions that make this requirement not practical:

(a) This General Permit as well as the Certificate of Coverage, after it is received.

(b) Records of inspections made during the previous twelve months. The permittee shall record the required observations on the Inspection Record Form provided by the Division or a similar inspection form that includes all the required elements. Use of electronically-available records in lieu of the required paper copies will be allowed if shown to provide equal access and utility as the hard-copy records.

3. Documentation to be Retained for Three Years

All data used to complete the e-NOI and all inspection records shall be maintained for a period of three years after project completion and made available upon request. [40 CFR 122.41]

PART III
SELF-INSPECTION, RECORDKEEPING AND REPORTING

SECTION C: REPORTING

1. Occurrences that Must be Reported

Permittees shall report the following occurrences:

(a) Visible sediment deposition in a stream or wetland.

(b) Oil spills if:
- They are 25 gallons or more,
- They are less than 25 gallons but cannot be cleaned up within 24 hours,
- They cause sheen on surface waters (regardless of volume), or
- They are within 100 feet of surface waters (regardless of volume).

(c) Releases of hazardous substances in excess of reportable quantities under Section 311 of the Clean Water Act (Ref: 40 CFR 110.3 and 40 CFR 117.3) or Section 102 of CERCLA (Ref: 40 CFR 302.4) or G.S. 143-215.85.

(d) Anticipated bypasses and unanticipated bypasses.

(e) Noncompliance with the conditions of this permit that may endanger health or the environment.

2. Reporting Timeframes and Other Requirements

After a permittee becomes aware of an occurrence that must be reported, he shall contact the appropriate Division regional office within the timeframes and in accordance with the other requirements listed below. Occurrences outside normal business hours may also be reported to the Department's Environmental Emergency Center personnel at (800) 858-0368.

Occurrence	Reporting Timeframes (After Discovery) and Other Requirements
(a) Visible sediment deposition in a stream or wetland	• ***Within 24 hours,*** an oral or electronic notification. • ***Within 7 calendar days,*** a report that contains a description of the sediment and actions taken to address the cause of the deposition. Division staff may waive the requirement for a written report on a case-by-case basis. • If the stream is named on the NC 303(d) list as impaired for sediment-related causes, the permittee may be required to perform additional monitoring, inspections or apply more stringent practices if staff determine that additional requirements are needed to assure compliance with the federal or state impaired-waters conditions.
(b) Oil spills and release of hazardous substances per Item 1(b)-(c) above	• ***Within 24 hours,*** an oral or electronic notification. The notification shall include information about the date, time, nature, volume and location of the spill or release.
(c) Anticipated bypasses [40 CFR 122.41(m)(3)]	• ***A report at least ten days before the date of the bypass, if possible.*** The report shall include an evaluation of the anticipated quality and effect of the bypass.
(d) Unanticipated bypasses [40 CFR 122.41(m)(3)]	• ***Within 24 hours,*** an oral or electronic notification. • ***Within 7 calendar days,*** a report that includes an evaluation of the quality and effect of the bypass.
(e) Noncompliance with the conditions of this permit that may endanger health or the environment[40 CFR 122.41(l)(7)]	• ***Within 24 hours,*** an oral or electronic notification. • ***Within 7 calendar days,*** a report that contains a description of the noncompliance, and its causes; the period of noncompliance, including exact dates and times, and if the noncompliance has not been corrected, the anticipated time noncompliance is expected to continue; and steps taken or planned to reduce, eliminate, and prevent reoccurrence of the noncompliance. [40 CFR 122.41(l)(6). • Division staff may waive the requirement for a written report on a case-by-case basis.

PART III, SECTION G, ITEM (4)
DRAW DOWN OF SEDIMENT BASINS FOR MAINTENANCE OR CLOSE OUT

Sediment basins and traps that receive runoff from drainage areas of one acre or more shall use outlet structures that withdraw water from the surface when these devices need to be drawn down for maintenance or close out unless this is infeasible. The circumstances in which it is not feasible to withdraw water from the surface shall be rare (for example, times with extended cold weather). Non-surface withdrawals from sediment basins shall be allowed only when all of the following criteria have been met:

(a) The E&SC plan authority has been provided with documentation of the non-surface withdrawal and the specific time periods or conditions in which it will occur. The non-surface withdrawal shall not commence until the E&SC plan authority has approved these items,
(b) The non-surface withdrawal has been reported as an anticipated bypass in accordance with Part III, Section C, Item (2)(c) and (d) of this permit,
(c) Dewatering discharges are treated with controls to minimize discharges of pollutants from stormwater that is removed from the sediment basin. Examples of appropriate controls include properly sited, designed and maintained dewatering tanks, weir tanks, and filtration systems,
(d) Vegetated, upland areas of the sites or a properly designed stone pad is used to the extent feasible at the outlet of the dewatering treatment devices described in Item (c) above,
(e) Velocity dissipation devices such as check dams, sediment traps, and riprap are provided at the discharge points of all dewatering devices, and
(f) Sediment removed from the dewatering treatment devices described in Item (c) above is disposed of in a manner that does not cause deposition of sediment into waters of the United States.

NORTH CAROLINA *Environmental Quality*

NCG01 SELF-INSPECTION, RECORDKEEPING AND REPORTING

EFFECTIVE: 04/01/19

CITY OF RALEIGH - PLANS AUTHORIZED FOR CONSTRUCTION

Electronic Approval: This approval is being issued electronically. This approval is valid only upon the signature of a City of Raleigh Review Officer below. The City will retain a copy of the approved plans. Any work authorized by this approval must proceed in accordance with the plans kept on file with the City. This electronic approval may not be edited once issued. Any modification to this approval once issued will invalidate this approval.

City of Raleigh Development Approval _____

Raleigh Water Review Officer

NORTH CAROLINA PROFESSIONAL SEAL 036908 ENGINEER MARTY D. BIZZELL

09/01/23

BNK

BASS, NIXON & KENNEDY, INC.
CONSULTING ENGINEERS
6310 CHAPEL HILL ROAD, SUITE 250, RALEIGH, NC 27607
TELEPHONE: (919)851-4422 FAX: (919)851-8968
CERTIFICATION NUMBERS: NCBELS (C-0110); NCBOLA (C-0267)

NO.	DATE	DESCRIPTION	BY
		REVISIONS	

03-19157 | PROGRESS | MRM
JOB NO. | DATE | DRAWN BY

NCG01 PLAN

SCALE: N.T.S. | CHK BY: MDB

COBBLESTONE VILLAGE
MIXED USE DEVELOPMENT
TOWN OF ROLESVILLE, WAKE COUNTY, NORTH CAROLINA

SHEET C3.7

NOT RELEASED FOR CONSTRUCTION OR BID SOLICITATION

TOWN OF ROLESVILLE PROJECT NO.

©2019 BASS, NIXON & KENNEDY, INC. EXPRESSLY RESERVES ITS COMMON LAW COPYRIGHT AND OTHER PROPERTY RIGHTS IN THESE PLANS. THESE PLANS ARE NOT TO BE REPRODUCED, CHANGED OR COPIED IN ANY FORM OR MANNER WHATSOEVER, NOR ARE THEY TO BE ASSIGNED TO ANY THIRD PARTY WITHOUT FIRST OBTAINING THE EXPRESSED WRITTEN PERMISSION AND CONSENT OF BASS, NIXON & KENNEDY, INC.

CITY OF RALEIGH - PLANS AUTHORIZED FOR CONSTRUCTION

Electronic Approval: This approval is being issued electronically. This approval is valid only upon the signature of a City of Raleigh Review Officer below. The City will retain a copy of the approved plans. Any work authorized by this approval must proceed in accordance with the plans kept on file with the City. This electronic approval may not be edited once issued. Any modification to this approval once issued will invalidate this approval.

City of Raleigh Development Approval _____

Raleigh Water Review Officer

#28 WHAT HAPPEN TO THE STORMDRAINAGE PIPE TABLES

#30 Have as builts been completed?

STORMDRAINAGE STRUCTURE TABLE

STRUCTURE NAME	INSERTION RIM ELEVATION (FLOWLINE)	STRUCTURE TYPE
1	422.45 INV. IN= 419.80 (2)	24" FES
2	425.18 INV. OUT= 420.00 (1)	RISER
3	424.83 INV. IN= 421.00 (4)	36" FES
4	428.06 INV. IN= 421.36 (5) INV. OUT= 421.26 (3)	NCDOT CURB INLET
5A	429.50 INV. IN= 422.79 (5B) INV. OUT= 422.79 (5)	NCDOT CURB INLET
5B	428.50 INV. IN= 423.20 (6) INV. OUT= 423.20 (5A)	HDPE YARD INLET
5	429.08 INV. IN= 422.14 (5A) INV. IN= 423.05 (15) INV. OUT= 422.04 (4)	NCDOT CURB INLET
6	430.99 INV. IN= 423.45 (7) INV. IN= 423.45 (21) INV. OUT= 423.35 (5B)	NCDOT CURB INLET
7	431.15 INV. IN= 424.94 (8) INV. IN= 423.72 (16) INV. OUT= 423.62 (6)	NCDOT CURB INLET

STORMDRAINAGE STRUCTURE TABLE

STRUCTURE NAME	INSERTION RIM ELEVATION (FLOWLINE)	STRUCTURE TYPE
8	433.95 INV. IN= 425.92 (9) INV. OUT= 425.82 (7)	NCDOT CURB INLET
9	433.95 INV. IN= 426.92 (10) INV. IN= 428.60 (32) INV. OUT= 426.82 (8)	NCDOT CURB INLET
10	436.44 INV. IN= 427.69 (11) INV. IN= 430.86 (24) INV. OUT= 427.59 (9)	HDPE YARD INLET
11	437.44 INV. IN= 428.73 (12) INV. OUT= 428.63 (10)	HDPE YARD INLET
12	435.50 INV. IN= 429.75 (13) INV. OUT= 429.65 (11)	HDPE YARD INLET
13	436.00 INV. IN= 430.49 (14) INV. OUT= 430.39 (12)	NCDOT CURB INLET
14	436.00 INV. OUT= 430.75 (13)	NCDOT CURB INLET
15	428.50 INV. OUT= 424.10 (5)	HDPE YARD INLET
16	429.68 INV. IN= 424.71 (17) INV. OUT= 424.61 (7)	NCDOT CURB INLET

STORMDRAINAGE STRUCTURE TABLE

STRUCTURE NAME	INSERTION RIM ELEVATION (FLOWLINE)	STRUCTURE TYPE
17	434.01 INV. IN= 427.77 (18) INV. IN= 425.51 (30) INV. IN= 427.77 (34) INV. OUT= 425.41 (16)	NCDOT CURB INLET
18	436.04 INV. IN= 430.69 (19) INV. IN= 428.95 (31) INV. OUT= 428.85 (17)	NCDOT CURB INLET
19	437.52 INV. IN= 431.67 (20) INV. OUT= 431.57 (18)	NCDOT CURB INLET
20	438.65 INV. OUT= 432.50 (19)	NCDOT CURB INLET
21	431.60 INV. IN= 424.32 (22) INV. OUT= 424.22 (6)	HDPE YARD INLET
22	432.00 INV. IN= 424.70 (23) INV. IN= 424.70 (29) INV. OUT= 424.60 (21)	NCDOT CURB INLET
23	435.99 INV. OUT= 426.78 (22)	NCDOT CURB INLET
24	437.18 INV. IN= 432.32 (33) INV. OUT= 432.22 (10)	HDPE YARD INLET
27	441.00 INV. OUT= 436.27 (28)	HDPE YARD INLET

STORMDRAINAGE STRUCTURE TABLE

STRUCTURE NAME	INSERTION RIM ELEVATION (FLOWLINE)	STRUCTURE TYPE
28	441.00 INV. IN= 435.41 (27) INV. OUT= 435.31 (35)	HDPE YARD INLET
29	428.50 INV. OUT= 425.05 (22)	HDPE YARD INLET
30A	430.12 INV. OUT= 426.76 (30)	HDPE YARD INLET
30	430.12 INV. IN= 426.34 (30A) INV. OUT= 426.34 (17)	NCDOT CURB INLET
31	434.05 INV. OUT= 429.82 (18)	NCDOT CURB INLET
32	435.72 INV. OUT= 429.50 (9)	NCDOT CURB INLET
33	437.87 INV. IN= 432.53 (35) INV. OUT= 432.43 (24)	NCDOT CURB INLET
34	430.03 INV. OUT= 428.09 (17)	HDPE YARD INLET
35	441.08 INV. IN= 434.24 (28) INV. OUT= 434.14 (33)	HDPE YARD INLET

NOTE: ALL STORM ITEMS SHALL BE AS-BUILT PER THE TOWN UDO SECTION 7.5.5, WHICH SPECIFIES REQUIREMENTS AS-BUILTS FOR STORM.

#29 Identify what storm is NEW

NORTH CAROLINA PROFESSIONAL SEAL 036808 ENGINEER MARTY D. BIZZELL

09/01/23

BASS, NIXON & KENNEDY, INC.
CONSULTING ENGINEERS
6310 CHAPEL HILL ROAD, SUITE 250, RALEIGH, NC 27607
TELEPHONE: (919)851-4422 FAX: (919)851-8968
CERTIFICATION NUMBERS: NCBELS (C-0110); NCBOLA (C-0267)

NO.	DATE	DESCRIPTION	BY
		REVISIONS	

03-19157 JOB NO. | PROGRESS DATE | MRM DRAWN BY

STORM DRAINAGE PIPE & STRUCTURE TABLE

SCALE: | CHK BY: MDB

COBBLESTONE VILLAGE
MIXED USE DEVELOPMENT
TOWN OF ROLESVILLE, WAKE COUNTY, NORTH CAROLINA

SHEET C3.8

NOT RELEASED FOR CONSTRUCTION OR BID SOLICITATION

©2019 BASS, NIXON & KENNEDY, INC. EXPRESSLY RESERVES ITS COMMON LAW COPYRIGHT AND OTHER PROPERTY RIGHTS IN THESE PLANS. THESE PLANS ARE NOT TO BE REPRODUCED, CHANGED OR COPIED IN ANY FORM OR MANNER WHATSOEVER, NOR ARE THEY TO BE ASSIGNED TO ANY THIRD PARTY WITHOUT FIRST OBTAINING THE EXPRESSED WRITTEN PERMISSION AND CONSENT OF BASS, NIXON & KENNEDY, INC.

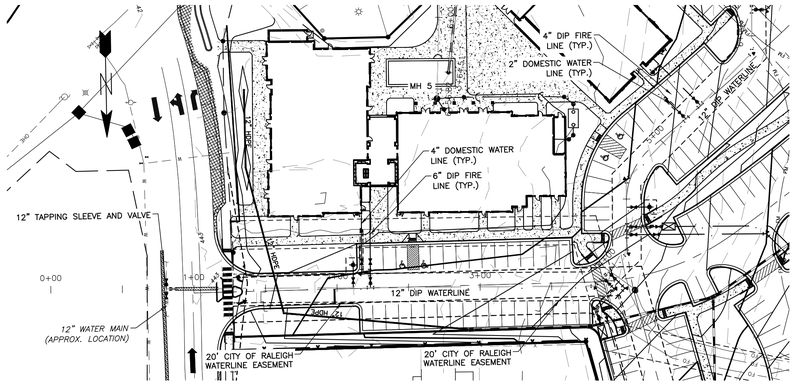

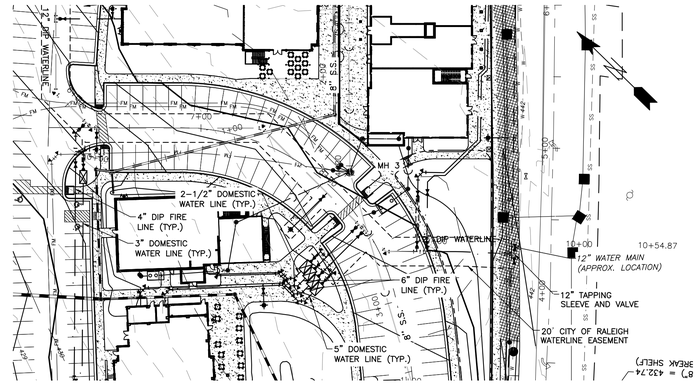

Public
Water Distribution / Extension System
The City of Raleigh consents to the connection and extension of the City's public water system as shown on this plan. The material and Construction methods used for this project shall conform to the standards and specifications of the City's Public Utilities Handbook.

City of Raleigh
Public Utilities Department Permit # W-3879

Authorization to Construct See digital signature

CITY OF RALEIGH - PLANS AUTHORIZED FOR CONSTRUCTION

Electronic Approval: This approval is being issued electronically. This approval is valid only upon the signature of a City of Raleigh Review Officer below. The City will retain a copy of the approved plans. Any work authorized by this approval must proceed in accordance with the plans kept on file with the City. This electronic approval may not be edited once issued. Any modification to this approval once issued will invalidate this approval.

City of Raleigh Development Approval _____

Raleigh Water Review Officer

PUBLIC WATERLINE PROFILE

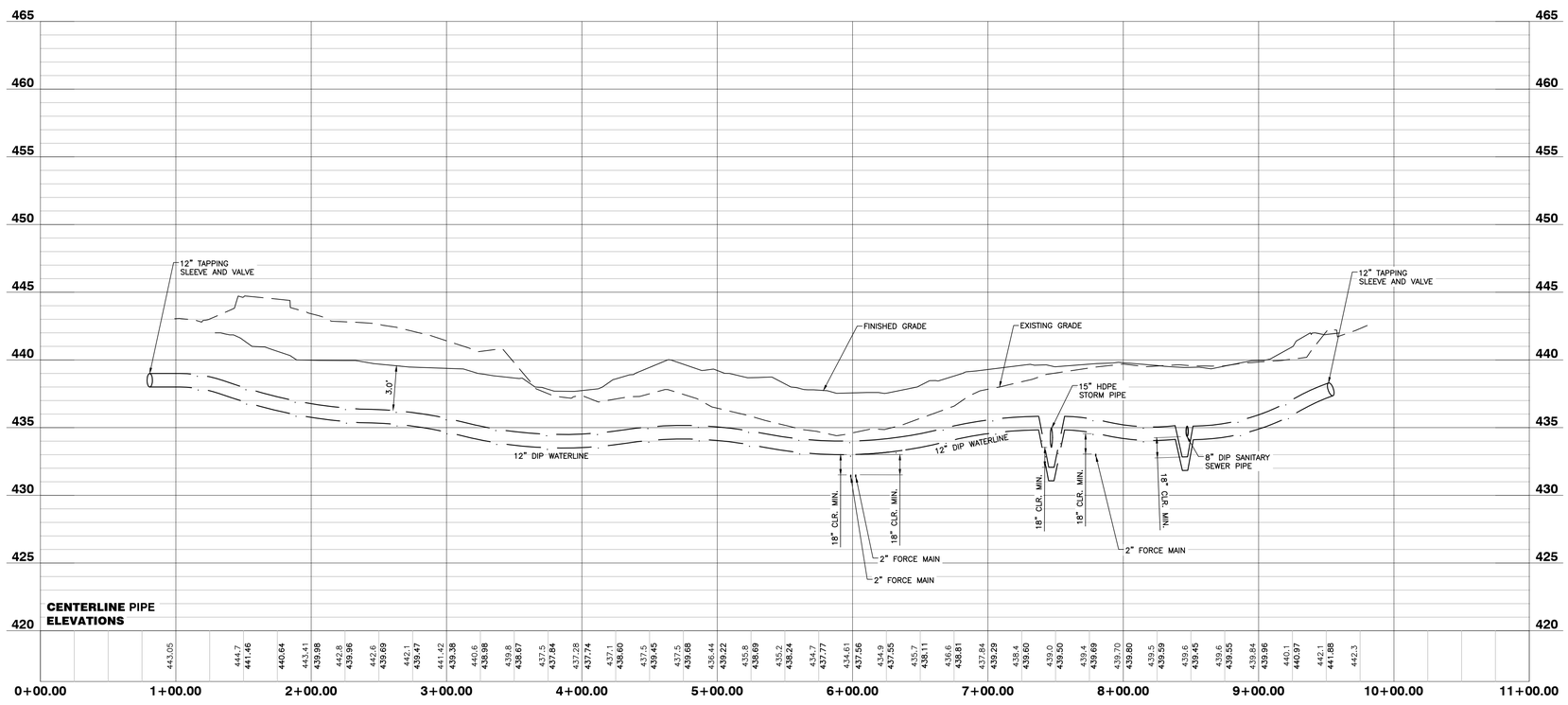

NORTH CAROLINA PROFESSIONAL SEAL 036808 ENGINEER MARTY D. BIZZELL
09/01/23

NO FLOODPLAINS EXIST ON-SITE

NOTE: ALL CONSTRUCTION ACTIVITY MUST BE IN ACCORDANCE WITH THE ACCEPTED POLICIES OF THE TOWN OF ROLESVILLE AND NCDOT

BNK
BASS, NIXON & KENNEDY, INC.
CONSULTING ENGINEERS
6310 CHAPEL HILL ROAD, SUITE 250, RALEIGH, NC 27607
TELEPHONE: (919)851-4422 FAX: (919)851-8968
CERTIFICATION NUMBERS: NCBELS (C-0110); NCBOLA (C-0267)

NO.	DATE	DESCRIPTION	BY
		REVISIONS	

JOB NO. 03-19157 DATE PROGRESS DRAWN BY MRM

PUBLIC WATERLINE PROFILE

SCALE: 1" = 50' H/ 1"= 5' V CHK BY:MDB

COBBLESTONE VILLAGE
MIXED USE DEVELOPMENT
TOWN OF ROLESVILLE, WAKE COUNTY, NORTH CAROLINA

SHEET C4.1

NOT RELEASED FOR CONSTRUCTION OR BID SOLICITATION

TOWN OF ROLESVILLE PROJECT NO.

©2019 BASS, NIXON & KENNEDY, INC. EXPRESSLY RESERVES ITS COMMON LAW COPYRIGHT AND OTHER PROPERTY RIGHTS IN THESE PLANS. THESE PLANS ARE NOT TO BE REPRODUCED, CHANGED OR COPIED IN ANY FORM OR MANNER WHATSOEVER, NOR ARE THEY TO BE ASSIGNED TO ANY THIRD PARTY WITHOUT FIRST OBTAINING THE EXPRESSED WRITTEN PERMISSION AND CONSENT OF BASS, NIXON & KENNEDY, INC.

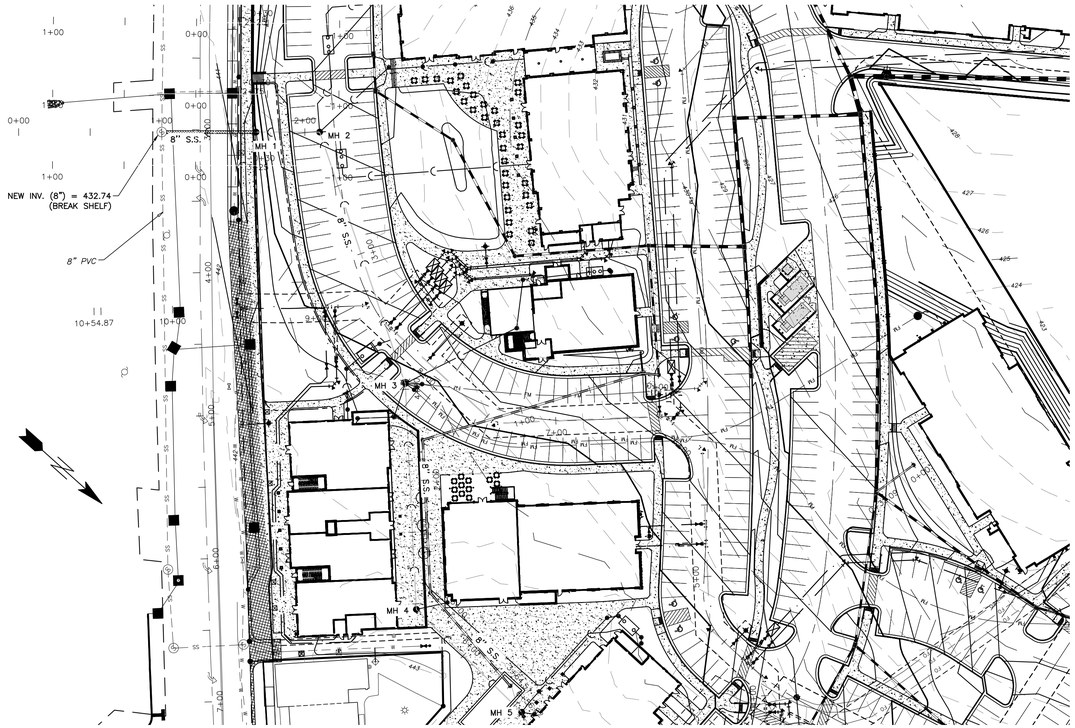

Private
Sewer Collection / Extension System

The City of Raleigh consents to the connection to its public sewer system and extension of the private sewer collection system as shown on this plan. The material and constructions methods used for this project shall conform to the standards and specifications of the City's Public Utilities Handbook.

City of Raleigh
Public Utilities Department Permit # S-4962 (P)

Authorization to Construct See digital signature

CITY OF RALEIGH - PLANS AUTHORIZED FOR CONSTRUCTION

Electronic Approval: This approval is being issued electronically. This approval is valid only upon the signature of a City of Raleigh Review Officer below. The City will retain a copy of the approved plans. Any work authorized by this approval must proceed in accordance with the plans kept on file with the City. This electronic approval may not be edited once issued. Any modification to this approval once issued will invalidate this approval.

City of Raleigh Development Approval _____

Raleigh Water Review Officer

SANITARY SEWER PROFILE

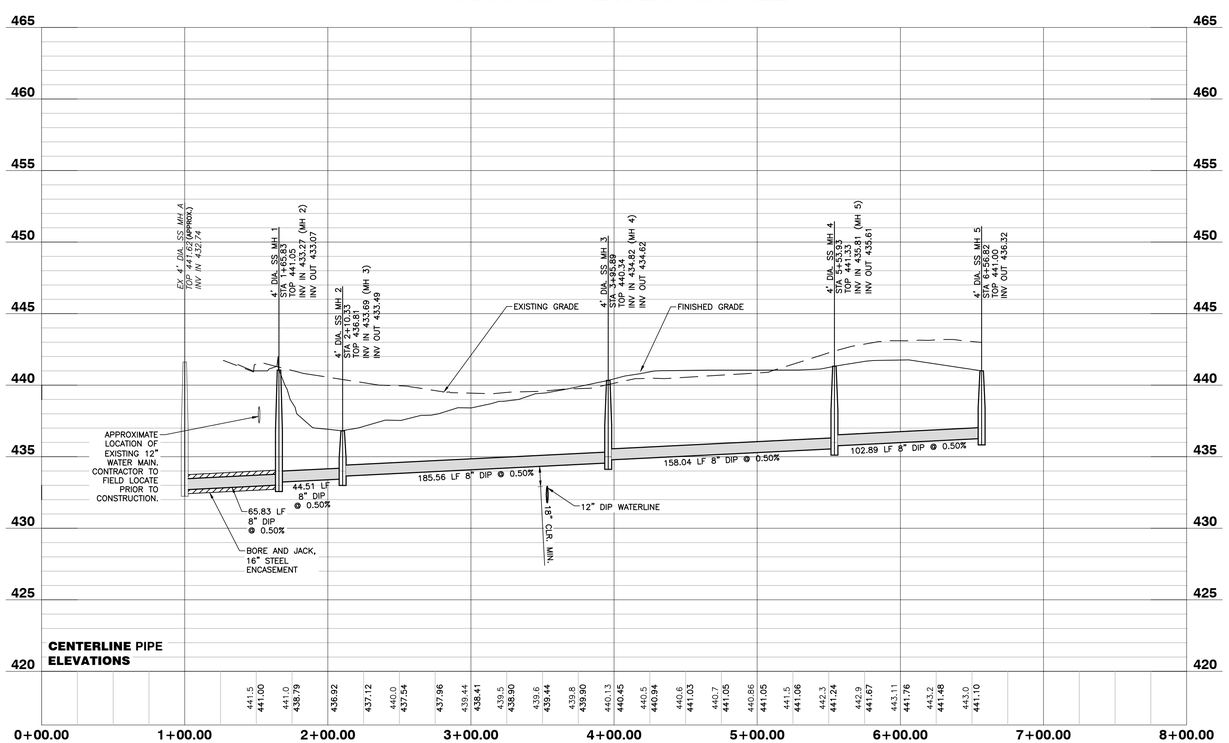

09/01/23

NO FLOODPLAINS EXIST ON-SITE

NOTE: ALL CONSTRUCTION ACTIVITY MUST BE IN ACCORDANCE WITH THE ACCEPTED POLICIES OF THE TOWN OF ROLESVILLE AND NCDOT

BNK

BASS, NIXON & KENNEDY, INC.
CONSULTING ENGINEERS
6310 CHAPEL HILL ROAD, SUITE 250, RALEIGH, NC 27607
TELEPHONE: (919)851-4422 FAX: (919)851-8968
CERTIFICATION NUMBERS: NCBELS (C-0110); NCBOLA (C-0267)

NO.	DATE	DESCRIPTION	BY

REVISIONS

03-19157 PROGRESS MRM
JOB NO. DATE DRAWN BY

SANITARY SEWER PROFILE

SCALE: 1" = 50' H/ 1"= 5' V CHK BY: MDB

COBBLESTONE VILLAGE
MIXED USE DEVELOPMENT
TOWN OF ROLESVILLE, WAKE COUNTY, NORTH CAROLINA

SHEET C4.2

TOWN OF ROLESVILLE PROJECT NO.

NOT RELEASED FOR CONSTRUCTION OR BID SOLICITATION

©2019 BASS, NIXON & KENNEDY, INC. EXPRESSLY RESERVES ITS COMMON LAW COPYRIGHT AND OTHER PROPERTY RIGHTS IN THESE PLANS. THESE PLANS ARE NOT TO BE REPRODUCED, CHANGED OR COPIED IN ANY FORM OR MANNER WHATSOEVER, NOR ARE THEY TO BE ASSIGNED TO ANY THIRD PARTY WITHOUT FIRST OBTAINING THE EXPRESSED WRITTEN PERMISSION AND CONSENT OF BASS, NIXON & KENNEDY, INC.

1+75

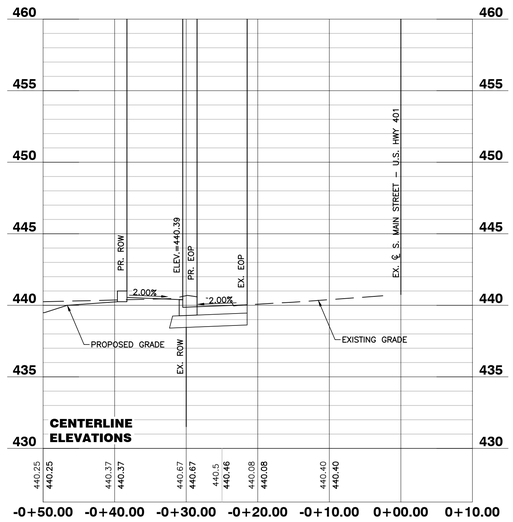

2+25

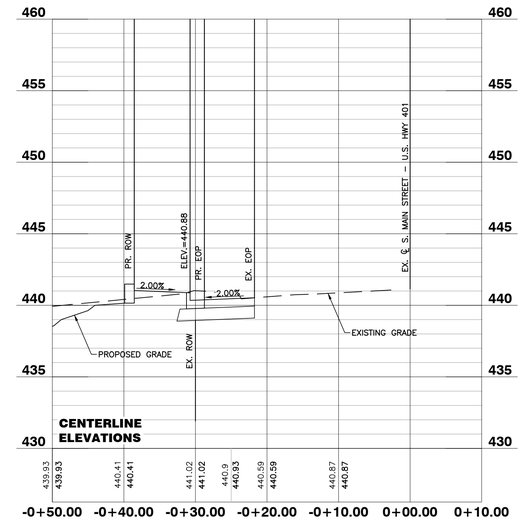

2+75

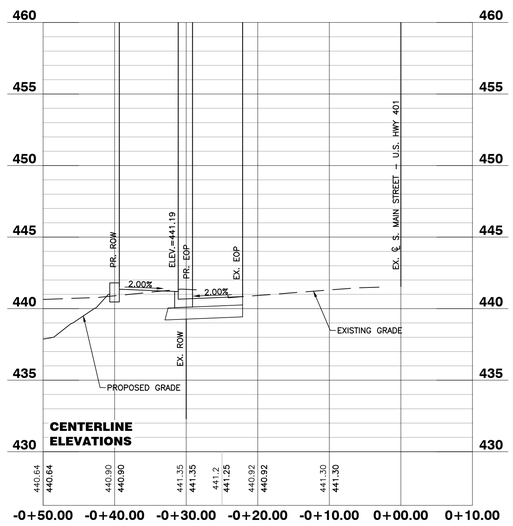

3+25

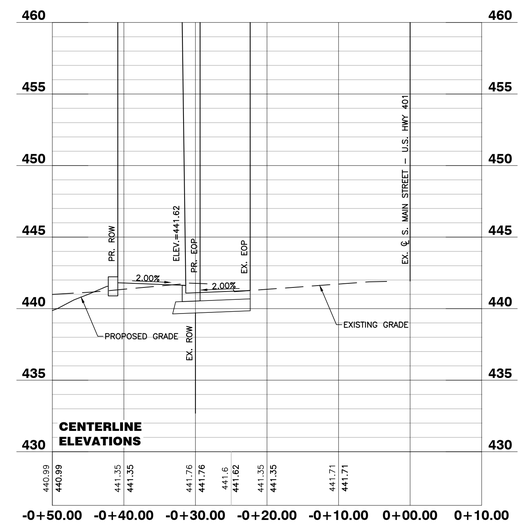

CITY OF RALEIGH - PLANS AUTHORIZED FOR CONSTRUCTION

Electronic Approval: This approval is being issued electronically. This approval is valid only upon the signature of a City of Raleigh Review Officer below. The City will retain a copy of the approved plans. Any work authorized by this approval must proceed in accordance with the plans kept on file with the City. This electronic approval may not be edited once issued. Any modification to this approval once issued will invalidate this approval.

City of Raleigh Development Approval _____

Raleigh Water Review Officer

NORTH CAROLINA PROFESSIONAL SEAL 036908 ENGINEER MARTY D. BIZZELL

09/01/23

NO FLOODPLAINS EXIST ON-SITE

NOTE: ALL CONSTRUCTION ACTIVITY MUST BE IN ACCORDANCE WITH THE ACCEPTED POLICIES OF THE TOWN OF ROLESVILLE AND NCDOT

BNK

BASS, NIXON & KENNEDY, INC.
CONSULTING ENGINEERS
6310 CHAPEL HILL ROAD, SUITE 250, RALEIGH, NC 27607
TELEPHONE: (919)851-4422 FAX: (919)851-8968
CERTIFICATION NUMBERS: NCBELS (C-0110); NCBOLA (C-0267)

NO.	DATE	DESCRIPTION	BY

REVISIONS

03-19157 PROGRESS MRM
JOB NO. DATE DRAWN BY

S. MAIN ST. - U.S. 401
WIDENING CROSS SECTIONS

SCALE: 1" = 50' H/ 1" = 5' V CHK BY:MDB

COBBLESTONE VILLAGE
MIXED USE DEVELOPMENT
TOWN OF ROLESVILLE, WAKE COUNTY, NORTH CAROLINA

SHEET C4.3

TOWN OF ROLESVILLE PROJECT NO.

NOT RELEASED FOR CONSTRUCTION OR BID SOLICITATION

©2019 BASS, NIXON & KENNEDY, INC. EXPRESSLY RESERVES ITS COMMON LAW COPYRIGHT AND OTHER PROPERTY RIGHTS IN THESE PLANS. THESE PLANS ARE NOT TO BE REPRODUCED, CHANGED OR COPIED IN ANY FORM OR MANNER WHATSOEVER, NOR ARE THEY TO BE ASSIGNED TO ANY THIRD PARTY WITHOUT FIRST OBTAINING THE EXPRESSED WRITTEN PERMISSION AND CONSENT OF BASS, NIXON & KENNEDY, INC.

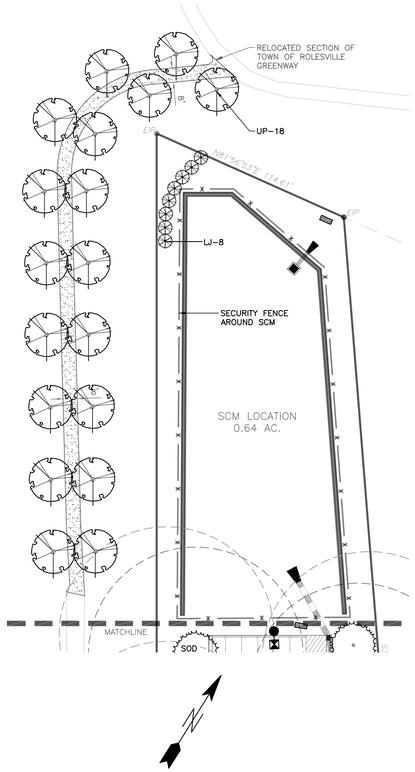

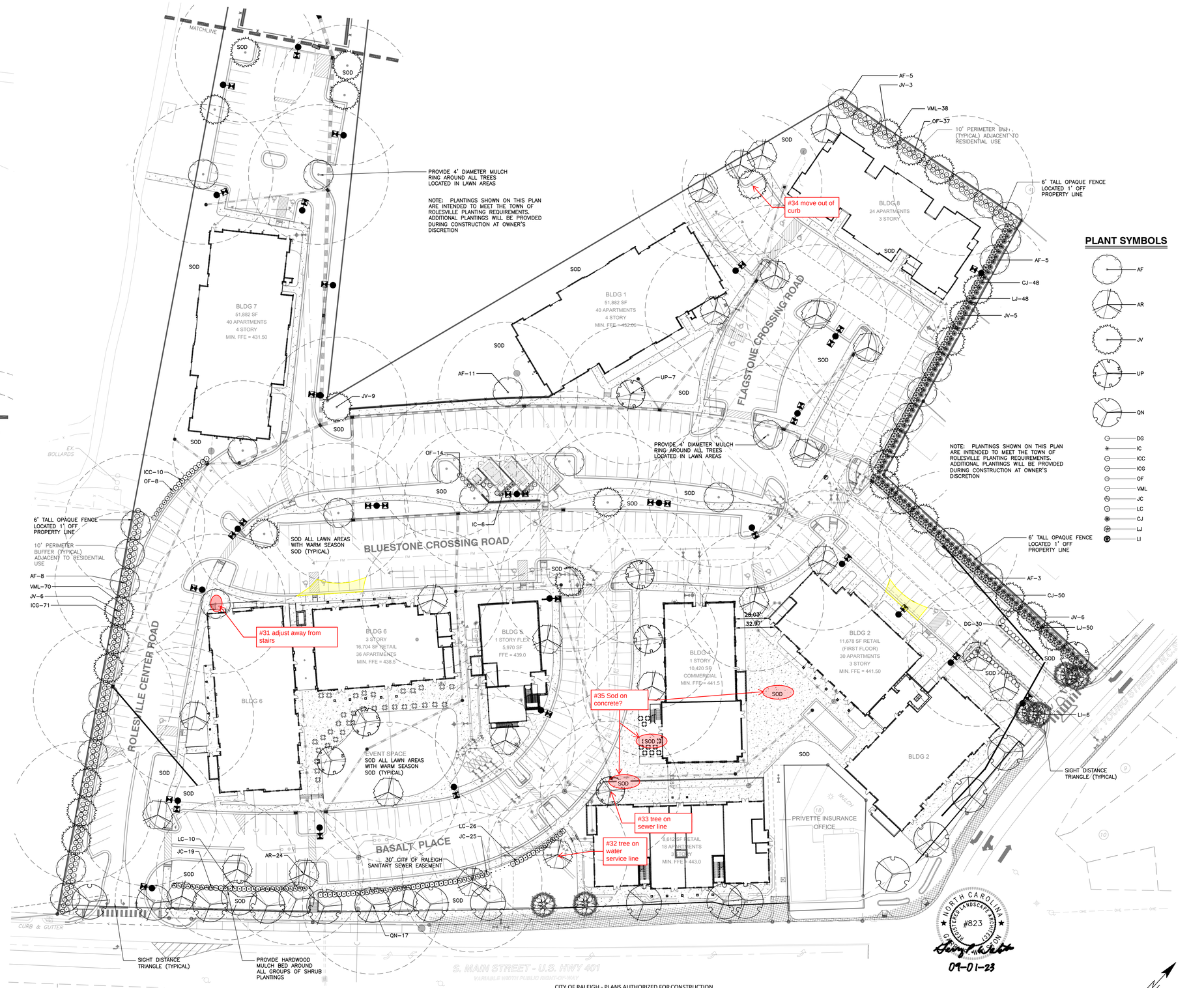

PLANT SYMBOLS

PLANT LIST

KEY	SCIENTIFIC NAME	COMMON NAME	QUAN.	CAL	HT	ROOT	USE
	CANOPY TREES						
AF	Acer freemanii	Freeman Maple	32	2.5"	8'	B&B	Buffer/VUA
AR	Acer rubrum 'Brandywine'	Brandywine Red Maple	26	2.5"	8'	B&B	VUA
JV	Juniperus virginiana	Eastern Red Cedar	29	2.5"	8'	B&B	Buffer/VUA
QN	Quercus nutalli	Nuttall Oak	17	2.5"	8'	B&B	Street Tree
UP	Ulmus parvifolia 'Allee'	Allee Elm	25	2.5"	8'	B&B	VUA
	UNDERSTORY TREES						
LI	Lagerstroemia Indica 'Tonto'	Crepe Myrtle	6	1.5"	6'	B&B	Street
	SHRUBS						
CJ	Cleyera japonica	Japanese Cleyera	98		24"	CONT.	Buffer
DG	Distylium 'Green Wave'	Green Wave Distylium	30		24"	CONT.	VUA
IC	Ilex crenata 'Sky Pencil'	Sky Pencil Holly	6		36"	CONT.	Dumpster
ICC	Ilex crenata 'Chesapeake'	Chesapeake Holly	10		24"	CONT.	VUA Screen
ICG	Ilex crenata 'Green Lustre'	Green Lustre Japanese Holl	71		24"	CONT.	Buffer
JC	Juniperus chinensis 'Saybrook Gol	Saybrook Gold Juniper	44		24"	CONT.	VUA Screen
LC	Loropetalum chinense 'Daruma'	Daruma Loropetalum	36		24"	CONT.	VUA Screen
LJ	Ligustrum japonicum	Wax Ligustrum	106		24"	CONT.	Buffer
OF	Osmanthus fragrans	Fragrant Tea Olive	59		24"	CONT.	Buffer/Screen
VML	Viburnum x 'Moonlit Lace'	Moonlit Lace Viburnum	108		24"	CONT.	Buffer

NOTE: PLANTINGS SHOWN ON THIS PLAN ARE INTENDED TO MEET THE TOWN OF ROLESVILLE PLANTING REQUIREMENTS. ADDITIONAL PLANTINGS WILL BE PROVIDED DURING CONSTRUCTION AT OWNER'S DISCRETION

CITY OF RALEIGH - PLANS AUTHORIZED FOR CONSTRUCTION

Electronic Approval: This approval is being issued electronically. This approval is valid only upon the signature of a City of Raleigh Review Officer below. The City will retain a copy of the approved plans. Any work authorized by this approval must proceed in accordance with the plans kept on file with the City. This electronic approval may not be edited once issued. Any modification to this approval once issued will invalidate this approval.

City of Raleigh Development Approval _____

Raleigh Water Review Officer

NO FLOODPLAINS EXIST ON-SITE

NOTE: ALL CONSTRUCTION ACTIVITY MUST BE IN ACCORDANCE WITH THE ACCEPTED POLICIES OF THE TOWN OF ROLESVILLE AND NCDOT

SCALE IN FEET
0 20 40 80 120 160

BNK

BASS, NIXON & KENNEDY, INC.
CONSULTING ENGINEERS
6310 CHAPEL HILL ROAD, SUITE 250, RALEIGH, NC 27607
TELEPHONE: (919)851-4422 FAX: (919)851-8968
CERTIFICATION NUMBERS: NCBELS (C-0110); NCBOLA (C-0267)

NO.	DATE	DESCRIPTION	BY
3	05-12-22	PER TOR COMMENTS	GW
2	04-20-22	PER TOR COMMENTS	GW
1	5-25-21	PER TOR COMMENTS	GW

REVISIONS

JOB NO. 03-19157 | DATE | PROGRESS | DRAWN BY GW

LANDSCAPE PLAN

SCALE: 1" = 40' | CHK BY: GPW

COBBLESTONE VILLAGE
MIXED USE DEVELOPMENT
TOWN OF ROLESVILLE, WAKE COUNTY, NORTH CAROLINA

SHEET L1.1

NOT RELEASED FOR CONSTRUCTION OR BID SOLICITATION

©2019 BASS, NIXON & KENNEDY, INC. EXPRESSLY RESERVES ITS COMMON LAW COPYRIGHT AND OTHER PROPERTY RIGHTS IN THESE PLANS. THESE PLANS ARE NOT TO BE REPRODUCED, CHANGED OR COPIED IN ANY FORM OR MANNER WHATSOEVER, NOR ARE THEY TO BE ASSIGNED TO ANY THIRD PARTY WITHOUT FIRST OBTAINING THE EXPRESSED WRITTEN PERMISSION AND CONSENT OF BASS, NIXON & KENNEDY, INC.

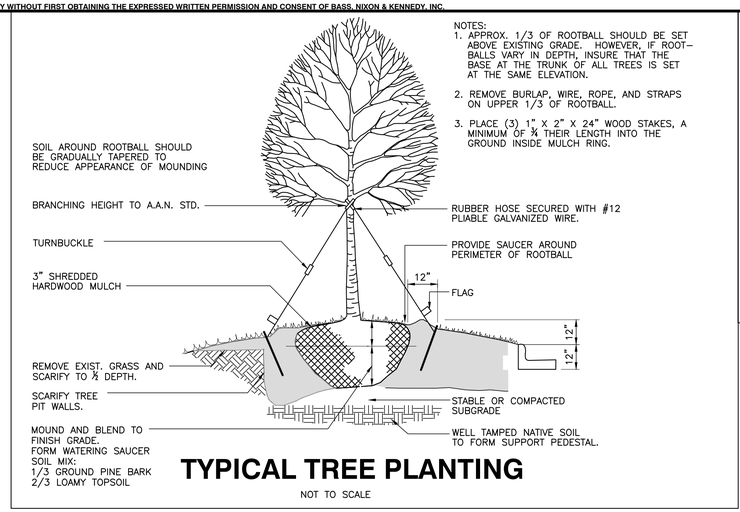

TYPICAL TREE PLANTING

NOT TO SCALE

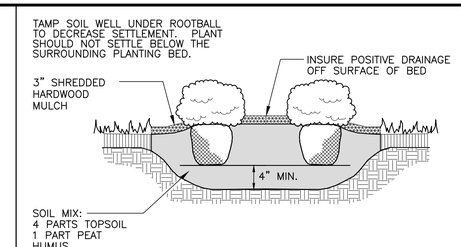

CONTINUOUS SHRUB PLANTING

NOT TO SCALE

GENERAL NOTES

1. A/C UNITS, TRANSFORMERS AND OTHER MECHANICAL OR UTILITY EQUIPMENT, NOT SHOWN ON THE PLAN, SHALL BE SCREENED FROM VIEW EITHER BY ADJUSTING PLANTINGS SHOWN IN CLOSE PROXIMITY TO EQUIPMENT OR BY THE ADDITION OF WAX MYRTLES @ 24" HT, 5' OC (SEE GENERAL NOTES FOR EQUIPMENT ACCESSIBILITY AND PLANTING PROXIMITY, ETC.). DUMPSTER IS SCREENED FROM OFF-SITE VIEWS.
2. CONTRACTOR SHALL VERIFY LOCATION OF ALL UTILITIES PRIOR TO PLANTING.
3. MULCH SHALL BE 3" DEEP SHREDDED HARDWOOD MULCH UNLESS OTHERWISE NOTED.
4. VERIFICATION OF TOTAL QUANTITIES AS SHOWN IN THE PLANT LIST AND ON THE PLAN SHALL BE THE RESPONSIBILITY OF THE LANDSCAPE CONTRACTOR. ANY DISCREPANCIES BETWEEN PLANT LIST AND PLANTING PLAN SHALL BE BROUGHT TO THE ATTENTION OF THE LANDSCAPE ARCHITECT FOR CLARIFICATION.
5. ALL TREES, SHRUBS, GROUNDCOVER, ETC. SHALL CONFORM TO ACCEPTED STANDARDS ESTABLISHED BY THE AMERICAN ASSOCIATION OF NURSERYMEN.
6. ALL ROOTBALLS REMOVED FROM CONTAINERS SHALL BE SCARIFIED PRIOR TO PLANTING.
7. B&B AS LISTED UNDER "ROOT" IN THE PLANT LIST INDICATES BALLED & BURLAPPED.
8. ALL PLANTS/PLANTINGS SHALL BE MULCHED IMMEDIATELY AFTER PLANTING AND WATERED.
9. ALL PLANTS SHALL BEAR THE SAME RELATIONSHIP TO FINISHED GRADE AS THEY BORE TO PREVIOUS EXISTING GRADE (UNLESS OTHERWISE NOTED).
10. ALL TREES AND SHRUBS SHALL REQUIRE MULCH RINGS AT THEIR BASE IF LEFT WITHIN LAWN AREAS.
11. MULCH EDGES AND PROPOSED PLANTINGS SHALL NOT DISTURB ANY EXISTING GROUPS OF TREES TO REMAIN. EDGES ARE SHOWN FOR APPROXIMATION ONLY, BUT ARE TO INDICATE SMOOTH, CLEAN CURVES.
12. CULVERTS, RIP-RAP STRUCTURES, AND OTHER STORMWATER DEVICES SHALL BE SCREENED WITH EVERGREEN SHRUBS. IF STRUCTURES ARE NOT SHOWN ON THE PLAN, INSTALL WAX MYRTLES @ 24" HT. - 5' OC.
13. A 2' BUMPER OVERHANG, FROM THE BACK OF CURB, SHALL BE ALLOTTED FOR MATURE SHRUBS.
14. TREE PROTECTION FENCING SHALL BE MAINTAINED UNTIL ALL SITE WORK IS COMPLETED. THE FENCING SHALL BE REMOVED PRIOR TO THE FINAL SITE INSPECTION FOR THE CERTIFICATE OF OCCUPANCY (C.O.). THE SITE SHALL BE STABILIZED AND SEEDED PRIOR TO THE ISSUANCE OF A (C.O.).
15. UNLESS OTHERWISE NOTED ON THE PLAN, ALL DISTURBED AREAS ARE TO BE SEEDED WITH WARM SEASON GRASS, INCLUDING PARKING LOT PERIMETERS AND PARKING LOT ISLANDS..
16. PERIMETER BUFFER AREAS ARE TO BE MULCHED TO A DEPTH OF THREE INCHES.

LANDSCAPE CALCULATIONS

PERIMETER BUFFERS (10' TYPICAL):

WEST (1) - 352 LF = 4 TREES / 100 LF = 14 TREES REQUIRED/PROVIDED
= 40 SHRUBS / 100 LF = 141 SHRUBS REQUIRED/PROVIDED
= 352 LF MIN. 6' TALL FENCE REQUIRED

NORTH (2) - 187 LF = 4 TREES / 100 LF = 8 TREES REQUIRED/PROVIDED
= 40 SHRUBS / 100 LF = 75 SHRUBS REQUIRED/PROVIDED
= 187 LF MIN. 6' TALL FENCE REQUIRED

NORTHEAST (3) - 240 LF = 4 TREES / 100 LF = 10 TREES REQUIRED/PROVIDED
= 40 SHRUBS / 100 LF = 96 SHRUBS REQUIRED/PROVIDED
= 240 LF MIN. 6' TALL FENCE REQUIRED

EAST (4) - 247 LF = 4 TREES / 100 LF = 10 TREES REQUIRED/PROVIDED
= 40 SHRUBS / 100 LF = 100 SHRUBS REQUIRED/PROVIDED
= 247 LF MIN. 6' TALL FENCE REQUIRED

STREET YARDS:

MAIN ST - 595 LF = 1 TREE / 50 LF = 12 TREES REQUIRED/PROVIDED

WEST YOUNG ST - 242 LF = 1 TREE / 50 LF = 5 TREES REQUIRED/PROVIDED

VEHICULAR USE AREA COVERAGE: 1 TREE WITHIN 60' OF EACH PARKING SPACE

PLANTING NOTES:

LOCATE PLANTS AND PLANTING BEDS BY USING SCALED DIMENSIONS FROM STREET, PROPERTY LINES, BACK OF CURB, BUILDINGS, WALLS, ETC. ALL PLANTS SHALL MEET OR EXCEED THE MINIMUM STANDARDS SET BY THE U.S.D.A. FOR NURSERY STOCK SPONSORED BY THE AMERICAN ASSOCIATION OF NURSERYMEN, INC., WASHINGTON, D.C. NO SUBSTITUTIONS SHALL BE PERMITTED WITHOUT WRITTEN APPROVAL FROM THE OWNER AND/OR THE LANDSCAPE ARCHITECT. SYMBOLS: B&B = BALLED & BURLAPPED; B.R. = BARE ROOT; CONT. = CONTAINER, O.C. = ON-CENTER

STREET TREE PLANTINGS TO BE COORDINATED IN CONCURRENCE WITH NCDOT STREETSCAPE IMPROVEMENT PROJECT ALONG S. MAIN AND YOUNG STREET(S).

PLANT SYMBOLS

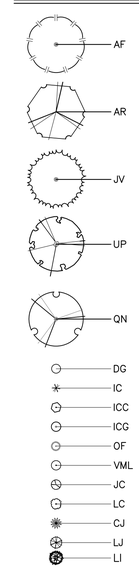

CITY OF RALEIGH - PLANS AUTHORIZED FOR CONSTRUCTION

Electronic Approval: This approval is being issued electronically. This approval is valid only upon the signature of a City of Raleigh Review Officer below. The City will retain a copy of the approved plans. Any work authorized by this approval must proceed in accordance with the plans kept on file with the City. This electronic approval may not be edited once issued. Any modification to this approval once issued will invalidate this approval.

City of Raleigh Development Approval _____

Raleigh Water Review Officer

NO FLOODPLAINS EXIST ON-SITE

NOTE: ALL CONSTRUCTION ACTIVITY MUST BE IN ACCORDANCE WITH THE ACCEPTED POLICIES OF THE TOWN OF ROLESVILLE AND NCDOT

NORTH CAROLINA REGISTERED LANDSCAPE ARCHITECT #823

09-01-23

BNK

BASS, NIXON & KENNEDY, INC.
CONSULTING ENGINEERS
6310 CHAPEL HILL ROAD, SUITE 250, RALEIGH, NC 27607
TELEPHONE: (919)851-4422 FAX: (919)851-8968
CERTIFICATION NUMBERS: NCBELS (C-0110); NCBOLA (C-0267)

NO.	DATE	DESCRIPTION	BY
3	05-12-22	PER TOR COMMENTS	GW
2	04-20-22	PER TOR COMMENTS	GW
1	5-25-21	PER TOR COMMENTS	GW

REVISIONS

03-19157 JOB NO. | PROGRESS DATE | GW DRAWN BY

LANDSCAPE DETAILS

SCALE: N.T.S. | CHK BY:GPW

COBBLESTONE VILLAGE
MIXED USE DEVELOPMENT
TOWN OF ROLESVILLE, WAKE COUNTY, NORTH CAROLINA

SHEET L1.2

NOT RELEASED FOR CONSTRUCTION OR BID SOLICITATION

Outdoor Lighting

Shoebox LED

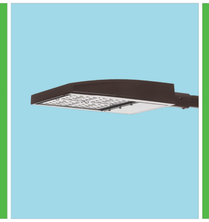

The energy-efficient Shoebox LED combines a decorative, contemporary style with versatility and ample lighting effect that is perfect for streets, parking lots, commercial buildings and residential communities. The Shoebox LED provides excellent color rendition along with a controlled light pattern that reduces glare and keeps the light directed only where you want it. Available in black, dark bronze, gray or white with one to four fixtures per pole.

LED *(Light Emitting Diode)*	150, 220, 420, 530 watts
Mounting heights	25', 30', 35'
Colors	Black Bronze Gray White
Poles	Fiberglass *(1 or 2 fixtures per pole)* Decorative tapered metal Decorative square metal

Note: 35' pole available in black or bronze only.

For additional information, visit us at **duke-energy.com/OutdoorLighting** or call us toll free at **866.769.6417**.

DUKE ENERGY. PROGRESS

BUILDING A SMARTER ENERGY FUTURE®

Outdoor Lighting

Shoebox LED

Light source: LED *(white)*

Replacement for:* LED Wattage 150 – 250-watt HPS and metal halide;
LED Wattage 205 – up to 400-watt metal halide;
LED Wattage 530 – 1,000-watt metal halide

Warm-up and restrike time: Instant on *(no warm-up or restrike time)*

Wattage	BUG Rating	Light Pattern	Lumens	Color Temp
LED 150	B5-U0-G3	IESNA Type V (circular)	19580	4,000K
LED 150	B3-U0-G4	IESNA Type IV (forward throw)	18459	
LED 150	B2-U0-G3	IESNA Type III (oval)	19006	
LED 220	B5-U0-G3	IESNA Type V *(circular)*	25870	
LED 220	B3-U0-G4	IESNA Type IV *(forward throw)*	24390	
LED 220	B2-U0-G4	IESNA Type III *(oval)*	25114	
LED 420	B5-U0-G5	IESNA Type V *(circular)*	48514	
LED 420	B3-U0-G5	IESNA Type IV *(forward throw)*	43765	
LED 530	B5-U0-G5	IESNA Type V *(circular)*	60296	
LED 530	B3-U0-G5	IESNA Type IV *(forward throw)*	54395	

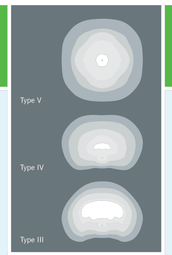

light distribution pattern

** These are approximate replacement suggestions; actual conditions could be different.*

Poles available:

Name	*Mounting height*	*Color*
Round tapered decorative metal*	35'	Black Bronze
Decorative square metal*	25' and 30'	Black Gray Bronze White
Fiberglass	30'	Black *(1 or 2 fixtures per pole)* Gray *(1 or 2 fixtures per pole)*

Features	Benefits
Little or no installation cost	Frees up capital for other projects
Design services by lighting professionals included	Meets industry standards and lighting ordinances
Maintenance included	Eliminates high and unexpected repair bills
Electricity included	Less expensive than metered service
Warranty included	Worry-free
One low monthly cost on your electric bill	Convenience and savings for you
Turnkey operation	Provides hassle-free installation and service
Backed by over 40 years of experience	A name you can trust today … and tomorrow

**2' raised foundation available when required on metal poles only.*

©2019 Duke Energy Corporation 193519 12/19

ISOFOOTCANDLE CURVES

ISOFOOTCANDLE CURVES

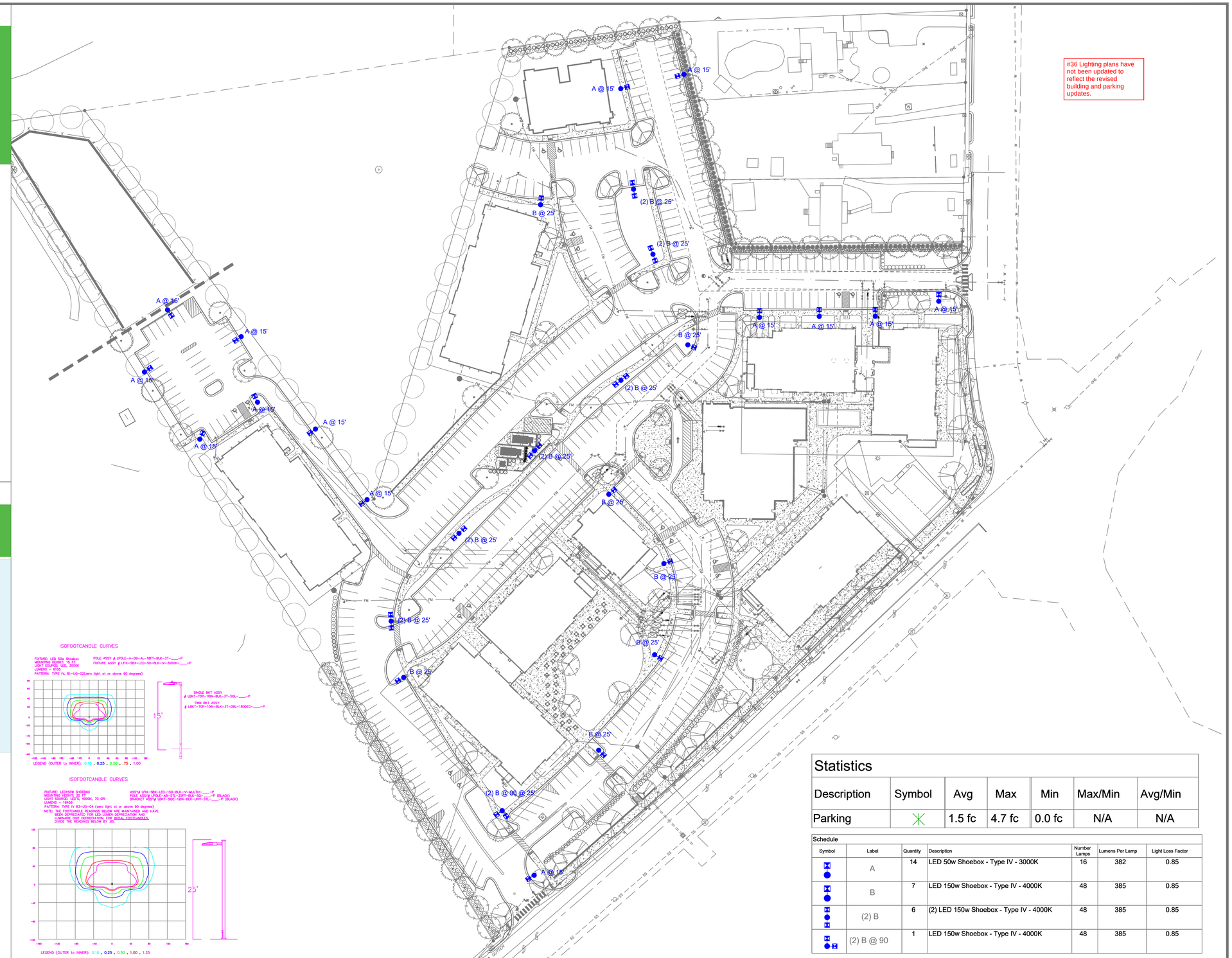

#36 Lighting plans have not been updated to reflect the revised building and parking updates.

Statistics

Description	Symbol	Avg	Max	Min	Max/Min	Avg/Min
Parking		1.5 fc	4.7 fc	0.0 fc	N/A	N/A

Schedule

Symbol	Label	Quantity	Description	Number Lamps	Lumens Per Lamp	Light Loss Factor
	A	14	LED 50w Shoebox - Type IV - 3000K	16	382	0.85
	B	7	LED 150w Shoebox - Type IV - 4000K	48	385	0.85
	(2) B	6	(2) LED 150w Shoebox - Type IV - 4000K	48	385	0.85
	(2) B @ 90	1	LED 150w Shoebox - Type IV - 4000K	48	385	0.85

REV#	DATE	REVISION	BY
Rev A	02/14/22	LED Shoebox	NJ

Customer approval_____
Date_____

DISTANCE CALIBRATION (INCHES)
0 0.5 1.0 2.0 3.0 4.0

LIGHTING DESIGN TOLERANCE

The calculated footcandle light levels in this lighting design are predicted values and are based on specific information that has been supplied to Duke Energy. Any inaccuracies in the supplied information, differences in luminaire installation, lighted area geometry including elevation differences, reflective properties of surrounding surfaces, obstructions (foliage or otherwise) in the lighted area, or lighting from sources other than listed in this design may produce different results from the predicted values. Normal tolerances of voltage, lamp output, and ballast and luminaire manufacture will also affect results.

DUKE ENERGY. PROGRESS

PROPRIETARY & CONFIDENTIAL

This document together with the concepts and designs presented herein, presented as an instrument of service, is the sole property of Duke Energy, and is intended only for the specific purpose and prospective client as stated in the title block of this drawing. Any use, copying, reproduction or disclosure of the drawing, design or any information contained herein by the prospective customer or other entities, including without limitation, architects, engineers, or equipment manufacturers is hereby expressly prohibited and shall not be permitted absent prior written consent from, and payment of compensation to Duke Energy. Duke Energy disclaims any liability or responsibility for any unauthorized use of or reliance on this document.

COBBLESTONE VILLAGE
Rolesville, NC
SITE LIGHTING PLAN

Designed by DEP LIGHTING SOLUTIONS
Reviewed by T. Ferguson Scale 1" = 50'
Date 02/14/2022 Size "Arch D"
Description LED Shoebox
Drawing No. 22-0047A Sht. 1 OF 1

©2019 BASS, NIXON & KENNEDY, INC. EXPRESSLY RESERVES ITS COMMON LAW COPYRIGHT AND OTHER PROPERTY RIGHTS IN THESE PLANS. THESE PLANS ARE NOT TO BE REPRODUCED, CHANGED OR COPIED IN ANY FORM OR MANNER WHATSOEVER, NOR ARE THEY TO BE ASSIGNED TO ANY THIRD PARTY WITHOUT FIRST OBTAINING THE EXPRESSED WRITTEN PERMISSION AND CONSENT OF BASS, NIXON & KENNEDY, INC.

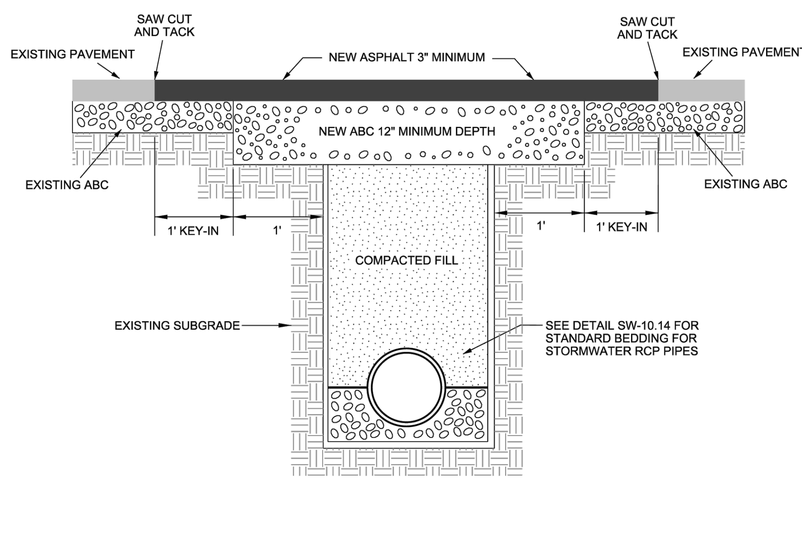

NOTES:
1. THE PAVEMENT EDGE SHALL BE DEFINED BY A STRAIGHT EDGE FORMED BY A MACHINED SAW CUT.
2. THE TRENCH SUBGRADE MATERIAL SHALL BE BACKFILLED WITH SUITABLE MATERIAL AND COMPACTED TO A DENSITY OF AT LEAST 95% OF THAT OBTAINED BY COMPACTING A SAMPLE OF THE MATERIAL IN ACCORDANCE WITH AASHTO T-99 AS MODIFIED BY NCDOT.
3. THE FINAL 1' OF FILL SHALL CONSIST OF ABC MATERIAL COMPACTED TO A DENSITY EQUAL TO 100% OF THAT OBTAINED BY COMPACTING A SAMPLE OF THE MATERIAL IN ACCORDANCE WITH AASHTO T-80 AS MODIFIED BY NCDOT. BITUMINOUS BASE OR BINDER MAY BE SUBSTITUTED IF APPROVED BY TRANSPORTATION DIRECTOR OR DESIGNEE.
4. THE ENTIRE THICKNESS/VERTICAL EDGE OF THE CUT SHALL BE TACKED.
5. THE SAME DEPTH OF PAVEMENT MATERIAL WHICH EXISTS SHALL BE REINSTALLED, BUT IN NO CASE SHALL THE ASPHALT BE LESS THAN 3" THICK.
6. THE ASPHALT PAVEMENT MATERIAL SHALL BE INSTALLED AND COMPACTED THOROUGHLY AND ROLLED WITH A SMOOTH DRUM ROLLER TO ACHIEVE A SMOOTH, LEVEL PATCH.

CITY OF RALEIGH
STANDARD DETAIL
REVISIONS | DATE: 8/2020 | NOT TO SCALE
ASPHALT PAVEMENT PATCH AND RCP PIPE BACKFILL
T-10.05

NOTE: SEE STANDARD DETAIL T-20.05 FOR PAVEMENT MARKING PLACEMENT

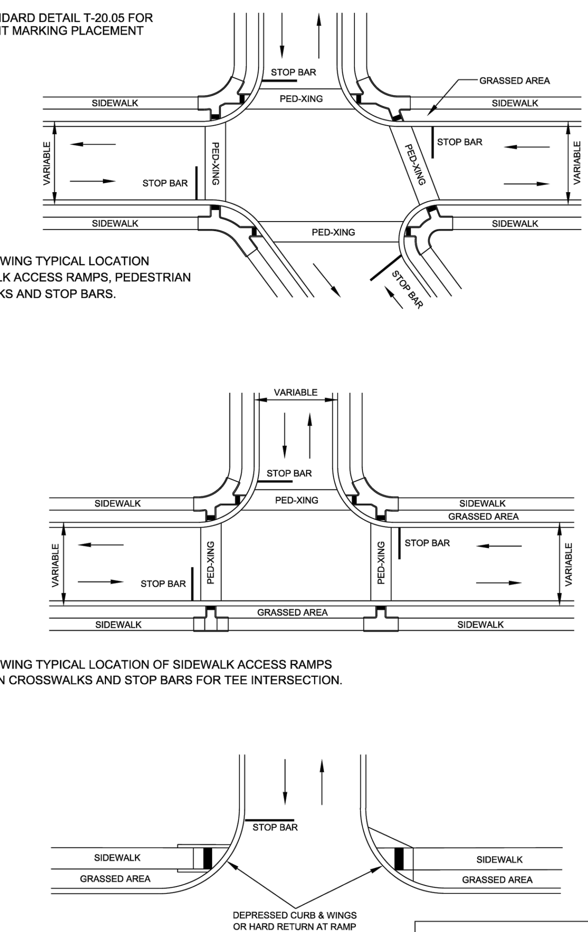

DETAIL SHOWING TYPICAL LOCATION OF SIDEWALK ACCESS RAMPS, PEDESTRIAN CROSSWALKS AND STOP BARS.

DETAIL SHOWING TYPICAL LOCATION OF SIDEWALK ACCESS RAMPS PEDESTRIAN CROSSWALKS AND STOP BARS FOR TEE INTERSECTION.

FOR RAMPS AT ASPHALT TO ASPHALT STREET TYPE DRIVEWAYS OR PRIVATE STREET TIE IN.

SHEET 1 OF 8

CITY OF RALEIGH
STANDARD DETAIL
REVISIONS | DATE: 8/2020 | NOT TO SCALE
CURB RAMPS
T-20.01.1

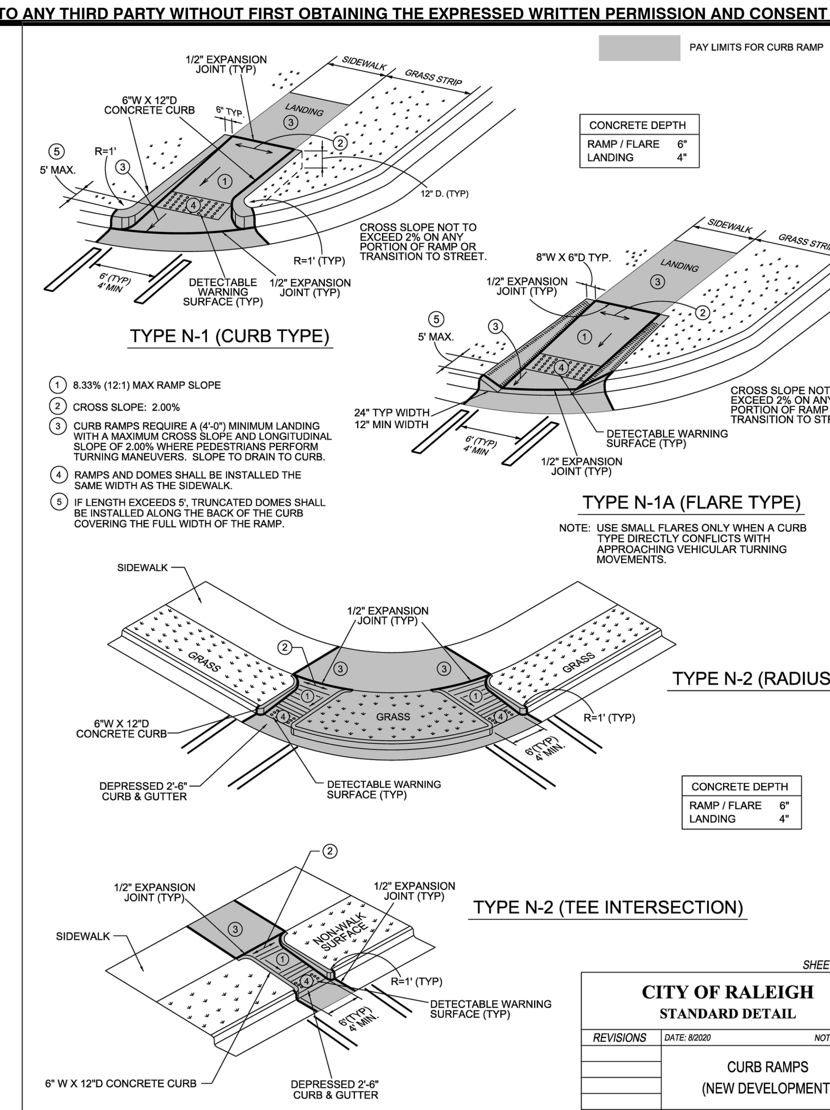

1. 8.33% (12:1) MAX RAMP SLOPE
2. CROSS SLOPE: 2.00%
3. CURB RAMPS REQUIRE A (4'-0") MINIMUM LANDING WITH A MAXIMUM CROSS SLOPE AND LONGITUDINAL SLOPE OF 2.00% WHERE PEDESTRIANS PERFORM TURNING MANEUVERS. SLOPE TO DRAIN TO CURB.
4. RAMPS AND DOMES SHALL BE INSTALLED THE SAME WIDTH AS THE SIDEWALK.
5. IF LENGTH EXCEEDS 5', TRUNCATED DOMES SHALL BE INSTALLED ALONG THE BACK OF THE CURB COVERING THE FULL WIDTH OF THE RAMP.

NOTE: USE SMALL FLARES ONLY WHEN A CURB TYPE DIRECTLY CONFLICTS WITH APPROACHING VEHICULAR TURNING MOVEMENTS.

SHEET 2 OF 8

CITY OF RALEIGH
STANDARD DETAIL
REVISIONS | DATE: 8/2020 | NOT TO SCALE
CURB RAMPS (NEW DEVELOPMENT)
T-20.01.2

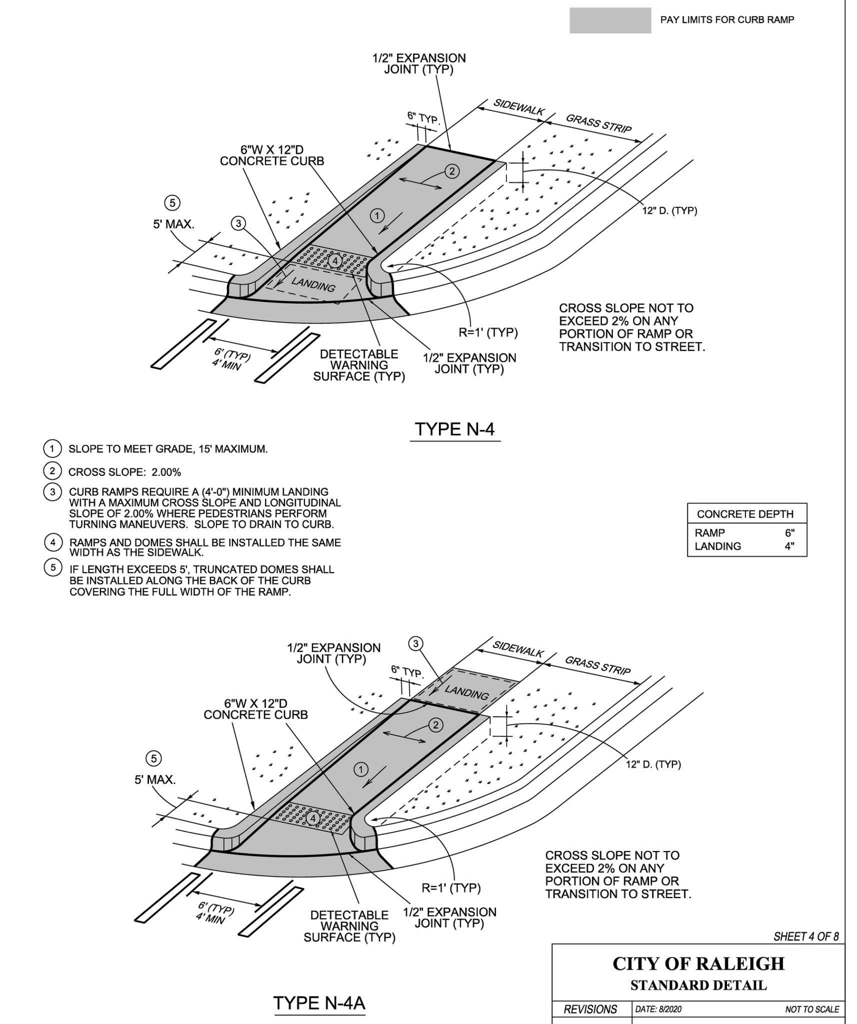

1. SLOPE TO MEET GRADE, 15' MAXIMUM.
2. CROSS SLOPE: 2.00%
3. CURB RAMPS REQUIRE A (4'-0") MINIMUM LANDING WITH A MAXIMUM CROSS SLOPE AND LONGITUDINAL SLOPE OF 2.00% WHERE PEDESTRIANS PERFORM TURNING MANEUVERS. SLOPE TO DRAIN TO CURB.
4. RAMPS AND DOMES SHALL BE INSTALLED THE SAME WIDTH AS THE SIDEWALK.
5. IF LENGTH EXCEEDS 5', TRUNCATED DOMES SHALL BE INSTALLED ALONG THE BACK OF THE CURB COVERING THE FULL WIDTH OF THE RAMP.

SHEET 4 OF 8

CITY OF RALEIGH
STANDARD DETAIL
REVISIONS | DATE: 8/2020 | NOT TO SCALE
CURB RAMPS (NEW DEVELOPMENT)
T-20.01.4

CITY OF RALEIGH CURB RAMPS GENERAL NOTES

1. CITY OF RALEIGH STANDARD CURB RAMPS HAVE BEEN DEVELOPED IN ACCORDANCE WITH THE AMERICANS WITH DISABILITIES ACT (ADA) AND PUBLIC RIGHT OF WAY ACCESS GUIDELINES (PROWAG).
2. CURB RAMPS SHALL BE PROVIDED AT LOCATIONS AS SHOWN ON THE PLANS OR AS DIRECTED BY THE ENGINEER. SIDEWALK ACCESS RAMPS SHALL BE LOCATED AS INDICATED IN THE DETAIL, HOWEVER, THE LOCATION MAY BE ADJUSTED IN COORDINATION WITH THE CITY OF RALEIGH WHERE EXISTING LIGHT POLES, FIRE HYDRANTS, DROP INLETS, ETC. AFFECT PLACEMENT.
3. DOUBLE WHEELCHAIR RAMPS ARE TO BE INSTALLED AT ALL PUBLIC STREET INTERSECTIONS WHERE SIDEWALK IS REQUIRED.
4. THE WALKING SURFACE SHALL BE SLIP RESISTANT. THE COLOR FOR THE DETECTABLE WARNING AREA SHALL BE YELLOW FOR CONTRAST.
5. NO SLOPE ON THE SIDEWALK ACCESS RAMP SHALL EXCEED 1"/FT (12:1) IN RELATIONSHIP TO THE GRADE OF THE STREET.
6. IN NO CASE SHALL THE WIDTH OF THE SIDEWALK ACCESS RAMP BE LESS THAN 48" ALL RAMPS SHALL BE INSTALLED THE SAME WIDTH AS THE SIDEWALK.
7. USE CLASS A (3000 PSI) CONCRETE WITH A SIDEWALK FINISH IN ORDER TO OBTAIN A ROUGH NONSKID SURFACE.
8. A 1/2" EXPANSION JOINT INSTALLED FULL DEPTH WILL BE REQUIRED WHERE THE CONCRETE SIDEWALK ACCESS RAMP JOINS THE CURB AND ALSO WHERE NEW CONCRETE ABUTS EXISTING CONCRETE.
9. CURB RAMPS SHOULD BE PLACED PARALLEL TO THE DIRECTION OF TRAVEL.

SHEET 8 OF 8

CITY OF RALEIGH
STANDARD DETAIL
REVISIONS | DATE: 8/2020 | NOT TO SCALE
CURB RAMP NOTES
T-20.01.8

POLYGRATE
3401 CHIEF DRIVE
HOLLY, MI 48442-9333
TOLL FREE: 1-800-523-6899
PHONE: (810) 953-9400
FAX: (810) 953-9440
www.polygrate.com

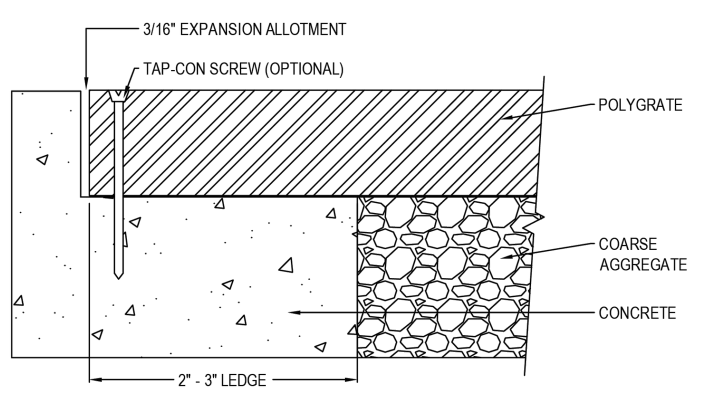

SECTION

PRODUCT AND MATERIAL TEST DATA			
RESIN PROPERTIES	**ASTM TEST**	**UNITS**	**TYPICAL VALUES**
DENSITY	D-1505	G / CC	0.957
MELT INDEX	D-1238	G / 10 MIN	7
MOLDED PROPERTIES	**ASTM TEST**	**UNITS**	**TYPICAL VALUES**
MODULUS	D-638	PSI	166 000
TENSILE AT YIELD	D-638	PSI	430
ELONGATION AT BREAK	D-638	%	1 400
FLEXURAL MODULUS	D-790	PSI	194 000

NOTES:
1. INSTALLATION TO BE COMPLETED IN ACCORDANCE WITH MANUFACTURER'S SPECIFICATIONS.
2. DO NOT SCALE DRAWING.
3. THIS DRAWING IS INTENDED FOR USE BY ARCHITECTS, ENGINEERS, CONTRACTORS, CONSULTANTS AND DESIGN PROFESSIONALS FOR PLANNING PURPOSES ONLY. THIS DRAWING MAY NOT BE USED FOR CONSTRUCTION.
4. ALL INFORMATION CONTAINED HEREIN WAS CURRENT AT THE TIME OF DEVELOPMENT BUT MUST BE REVIEWED AND APPROVED BY THE PRODUCT MANUFACTURER TO BE CONSIDERED ACCURATE.
5. CONTRACTOR'S NOTE: FOR PRODUCT AND COMPANY INFORMATION VISIT www.CADdetails.com/info AND ENTER REFERENCE NUMBER 1063-016

POLYGRATE™
POLYGRATE™ INSTALLATION WITH CONCRETE SURROUND

1063-016 REVISION DATE 01/26/2018

PROTECTED BY COPYRIGHT © 2018 CADDETAILS.COM LTD. CADdetails.com

POLYGRATE
3401 CHIEF DRIVE
HOLLY, MI 48442-9333
TOLL FREE: 1-800-523-6899
PHONE: (810) 953-9400
FAX: (810) 953-9440
www.polygrate.com

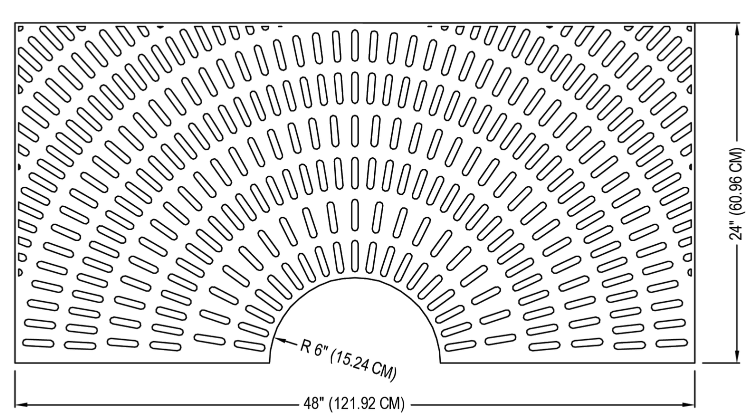

TOP VIEW - HALF GRATE

PRODUCT AND MATERIAL TEST DATA			
RESIN PROPERTIES	**ASTM TEST**	**UNITS**	**TYPICAL VALUES**
DENSITY	D-1505	G / CC	0.957
MELT INDEX	D-1238	G / 10 MIN	7
MOLDED PROPERTIES	**ASTM TEST**	**UNITS**	**TYPICAL VALUES**
MODULUS	D-638	PSI	166 000
TENSILE AT YIELD	D-638	PSI	430
ELONGATION AT BREAK	D-638	%	1 400
FLEXURAL MODULUS	D-790	PSI	194 000

NOTES:
1. INSTALLATION TO BE COMPLETED IN ACCORDANCE WITH MANUFACTURER'S SPECIFICATIONS.
2. DO NOT SCALE DRAWING.
3. THIS DRAWING IS INTENDED FOR USE BY ARCHITECTS, ENGINEERS, CONTRACTORS, CONSULTANTS AND DESIGN PROFESSIONALS FOR PLANNING PURPOSES ONLY. THIS DRAWING MAY NOT BE USED FOR CONSTRUCTION.
4. ALL INFORMATION CONTAINED HEREIN WAS CURRENT AT THE TIME OF DEVELOPMENT BUT MUST BE REVIEWED AND APPROVED BY THE PRODUCT MANUFACTURER TO BE CONSIDERED ACCURATE.
5. CONTRACTOR'S NOTE: FOR PRODUCT AND COMPANY INFORMATION VISIT www.CADdetails.com/info AND ENTER REFERENCE NUMBER 1063-006

POLYGRATE™ SQUARE TREE GRATES
4' X 4' SQUARE POLYGRATE™ TREE GRATE (TSB44)

1063-006 REVISION DATE 01/26/2018

PROTECTED BY COPYRIGHT © 2018 CADDETAILS.COM LTD. CADdetails.com

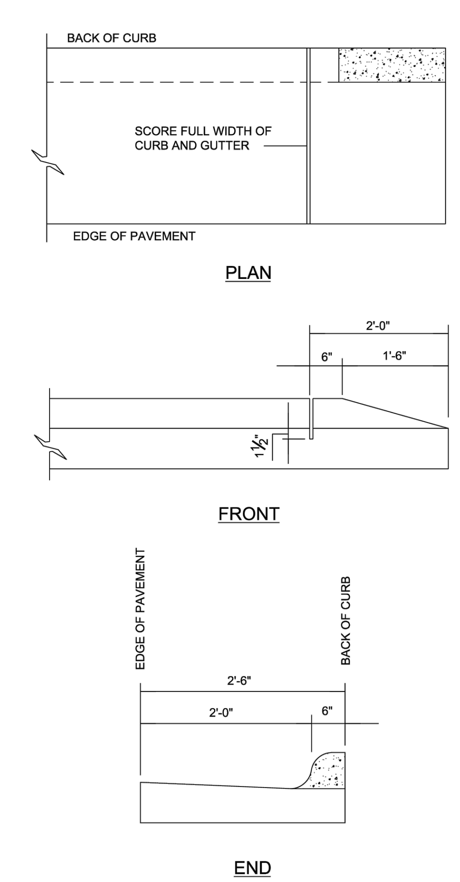

CITY OF RALEIGH
STANDARD DETAIL
REVISIONS | DATE: 8/2020 | NOT TO SCALE
STANDARD METHOD OF ENDING CURB AND GUTTER
T-10.25

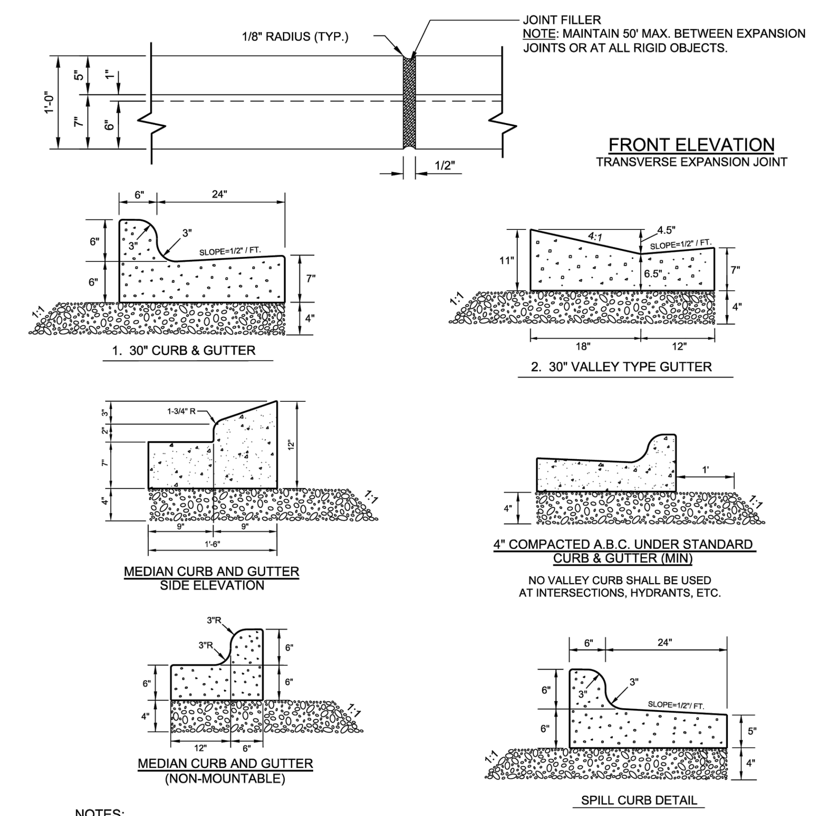

NOTES:
1. 10' MAXIMUM BETWEEN DUMMY JOINTS. 15' MAXIMUM BETWEEN DUMMY JOINTS ON MACHINE POURS.
2. 1/2" EXPANSION JOINT EVERY 50'.
3. 3000 PSI CONCRETE MINIMUM, 4" SLUMP MAXIMUM.
4. LIQUID MEMBRANE CURING COMPOUND SHALL MEET THE REQUIREMENTS OF SECTION 1026-2 OF NCDOT STANDARDS & SPECIFICATIONS FOR ROADS AND STRUCTURES.
5. ALL CONSTRUCTION JOINTS SHALL BE FILLED WITH JOINT FILLER AND SEALER IN ACCORDANCE WITH NCDOT ROADWAY STANDARD DETAIL 846.01 THE JOINT MATERIAL SHALL CONFORM TO SECTION 1028-2 OF NCDOT STANDARD & SPECIFICATIONS FOR ROADS AND STRUCTURES.
6. REFER TO NCDOT DETAIL 846.01 FOR CURB AND GUTTER SUPERELEVATION RATES.

SHEET 1 OF 2

CITY OF RALEIGH
STANDARD DETAIL
REVISIONS | DATE: 8/2020 | NOT TO SCALE
CURB AND GUTTER
T-10.26.1

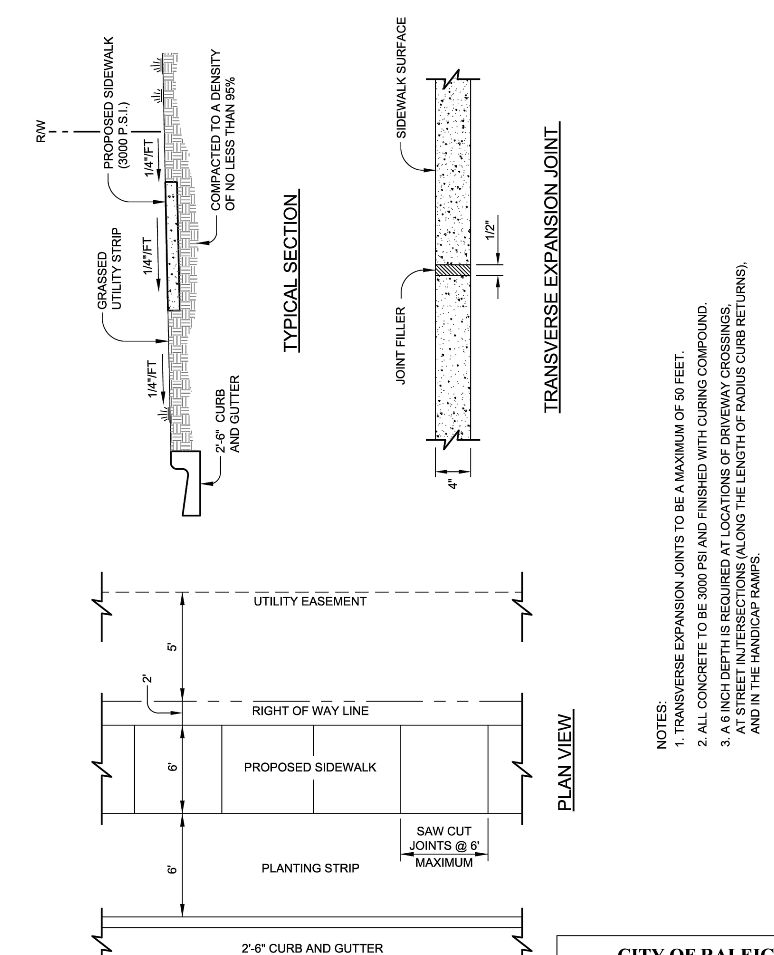

NOTES:
1. TRANSVERSE EXPANSION JOINTS TO BE A MAXIMUM OF 50 FEET.
2. ALL CONCRETE TO BE 3000 PSI AND FINISHED WITH CURING COMPOUND.
3. A 6 INCH DEPTH IS REQUIRED AT LOCATIONS OF DRIVEWAY CROSSINGS, AT STREET INTERSECTIONS (ALONG THE LENGTH OF RADIUS CURB RETURNS), AND IN THE HANDICAP RAMPS.

CITY OF RALEIGH
STANDARD DETAIL
REVISIONS | DATE: 8/2020 | NOT TO SCALE
CONCRETE SIDEWALK
T-30.01

NOTES:
CONCRETE FOR CURB AND GUTTER SHALL CONTAIN NOT MORE THAN 6.6 GALLONS OF WATER PER BAG NOT LESS 1.5 B.B.L.S PER CUBIC YARD. FORM MUST BE ACCEPTABLE TO ENGINEER.

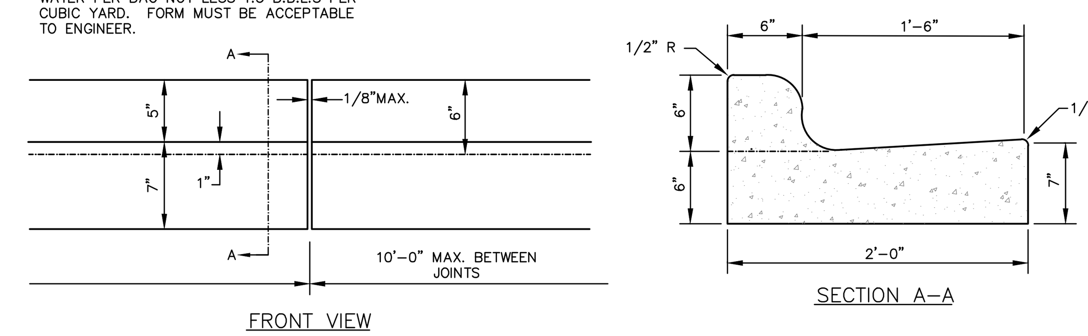

TYPICAL CURB AND GUTTER SECTION 24" FOR PRIVATE STREETS AND DRIVES ONLY

SCALE: NTS

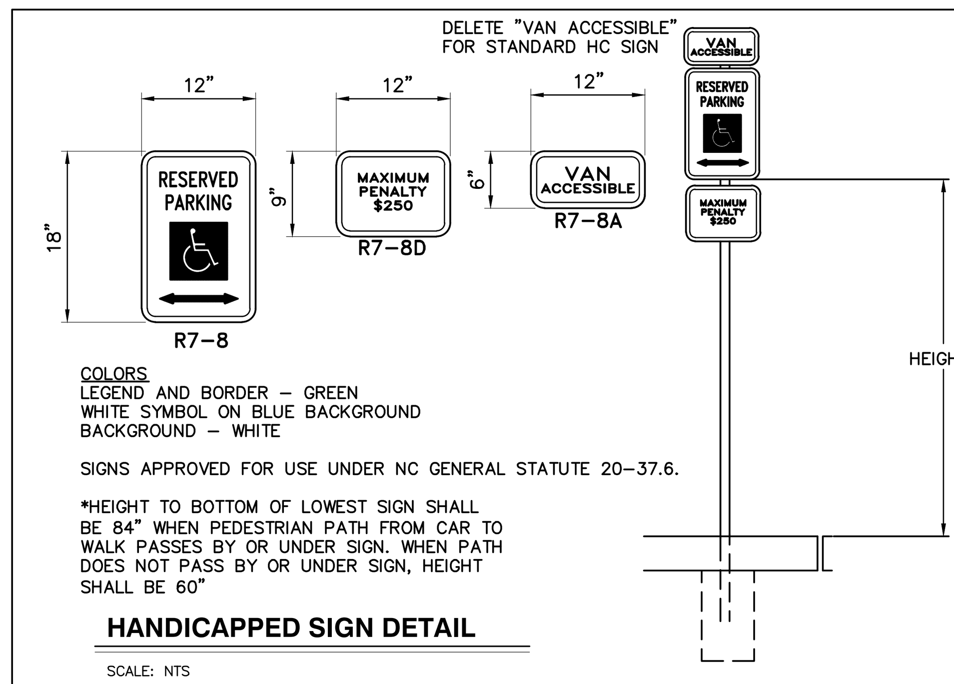

COLORS
LEGEND AND BORDER – GREEN
WHITE SYMBOL ON BLUE BACKGROUND
BACKGROUND – WHITE

SIGNS APPROVED FOR USE UNDER NC GENERAL STATUTE 20–37.6.

*HEIGHT TO BOTTOM OF LOWEST SIGN SHALL BE 84" WHEN PEDESTRIAN PATH FROM CAR TO WALK PASSES BY OR UNDER SIGN. WHEN PATH DOES NOT PASS BY OR UNDER SIGN, HEIGHT SHALL BE 60"

HANDICAPPED SIGN DETAIL

SCALE: NTS

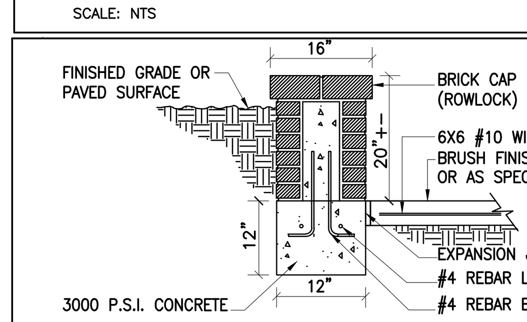

RAISED BRICK PLANTER/SEATWALL

CITY OF RALEIGH - PLANS AUTHORIZED FOR CONSTRUCTION

Electronic Approval: This approval is being issued electronically. This approval is valid only upon the signature of a City of Raleigh Review Officer below. The City will retain a copy of the approved plans. Any work authorized by this approval must proceed in accordance with the plans kept on file with the City. This electronic approval may not be edited once issued. Any modification to this approval once issued will invalidate this approval.

City of Raleigh Development Approval ______________________

Raleigh Water Review Officer

09/01/23

BNK
BASS, NIXON & KENNEDY, INC.
CONSULTING ENGINEERS
6310 CHAPEL HILL ROAD, SUITE 250, RALEIGH, NC 27607
TELEPHONE: (919)851-4422 FAX: (919)851-8968
CERTIFICATION NUMBERS: NCBELS (C-0110); NCBOLA (C-0267)

NO.	DATE	DESCRIPTION	BY
		REVISIONS	

03-19157 | PROGRESS | MRM
JOB NO. | DATE | DRAWN BY

DETAILS

SCALE: N.T.S. CHK BY: MDB

COBBLESTONE VILLAGE
MIXED USE DEVELOPMENT
TOWN OF ROLESVILLE, WAKE COUNTY, NORTH CAROLINA

SHEET **C5.1**

NOT RELEASED FOR CONSTRUCTION OR BID SOLICITATION

TOWN OF ROLESVILLE PROJECT NO.

©2019 BASS, NIXON & KENNEDY, INC. EXPRESSLY RESERVES ITS COMMON LAW COPYRIGHT AND OTHER PROPERTY RIGHTS IN THESE PLANS. THESE PLANS ARE NOT TO BE REPRODUCED, CHANGED OR COPIED IN ANY FORM OR MANNER WHATSOEVER, NOR ARE THEY TO BE ASSIGNED TO ANY THIRD PARTY WITHOUT FIRST OBTAINING THE EXPRESSED WRITTEN PERMISSION AND CONSENT OF BASS, NIXON & KENNEDY, INC.

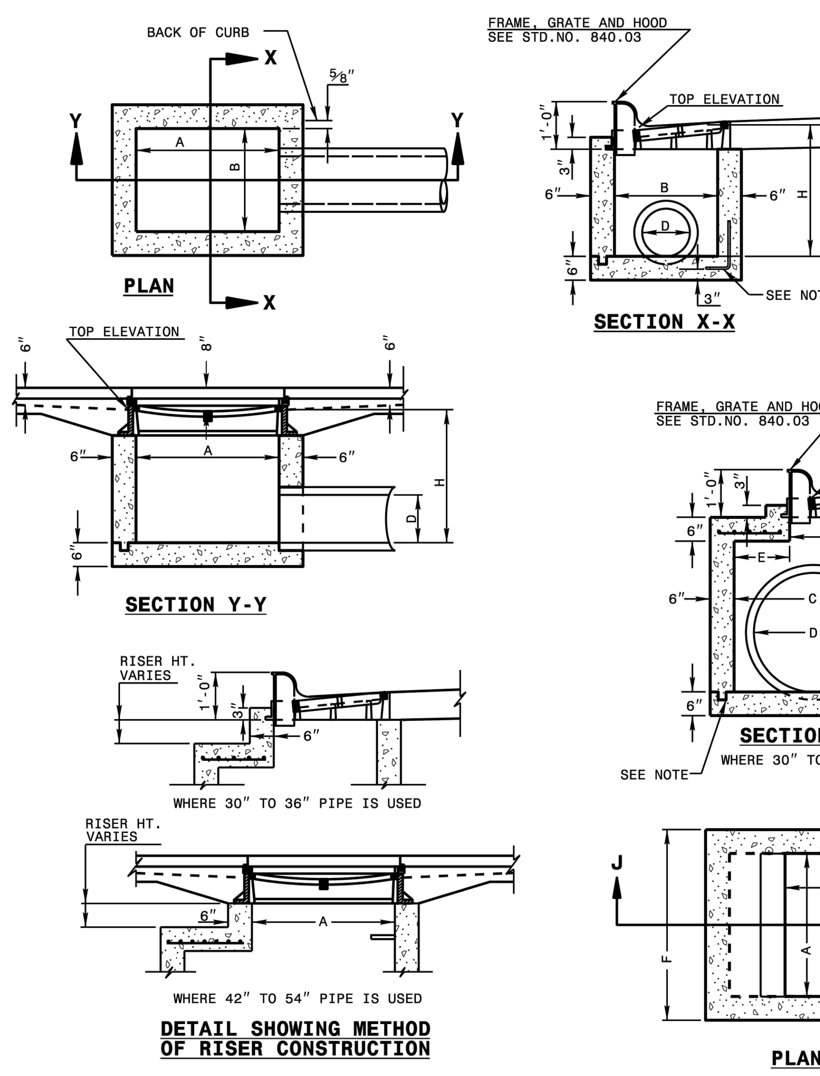

GENERAL NOTES:

USE CLASS "B" CONCRETE THROUGHOUT.

PROVIDE ALL CATCH BASINS OVER 3'-6" IN DEPTH WITH STEPS 12" ON CENTER. USE STEPS WHICH COMPLY WITH STD. DRAWING 840.66.

OPTIONAL CONSTRUCTION - MONOLITHIC POUR, 2" KEYWAY, OR #4 BAR DOWELS AT 12" CENTERS AS DIRECTED BY THE ENGINEER.

USE FORMS FOR THE CONSTRUCTION OF THE BOTTOM SLAB.

IF REINFORCED CONCRETE PIPE IS SET IN BOTTOM SLAB OF BOX, ADD TO SLAB AS SHOWN ON STD. NO. 840.00.

USE TYPE "E", "F" AND "G" GRATES UNLESS OTHERWISE INDICATED.

FOR 8'-0" IN HEIGHT OR LESS USE 6" WALLS AND BOTTOM SLAB. OVER 8'-0" TO 16'-0" IN HEIGHT USE 8" WALLS AND BOTTOM SLAB. ADJUST QUANTITIES ACCORDINGLY.

CONSTRUCT WITH PIPE CROWNS MATCHING.

CHAMFER ALL EXPOSED CORNERS 1".

DRAWING NOT TO SCALE.

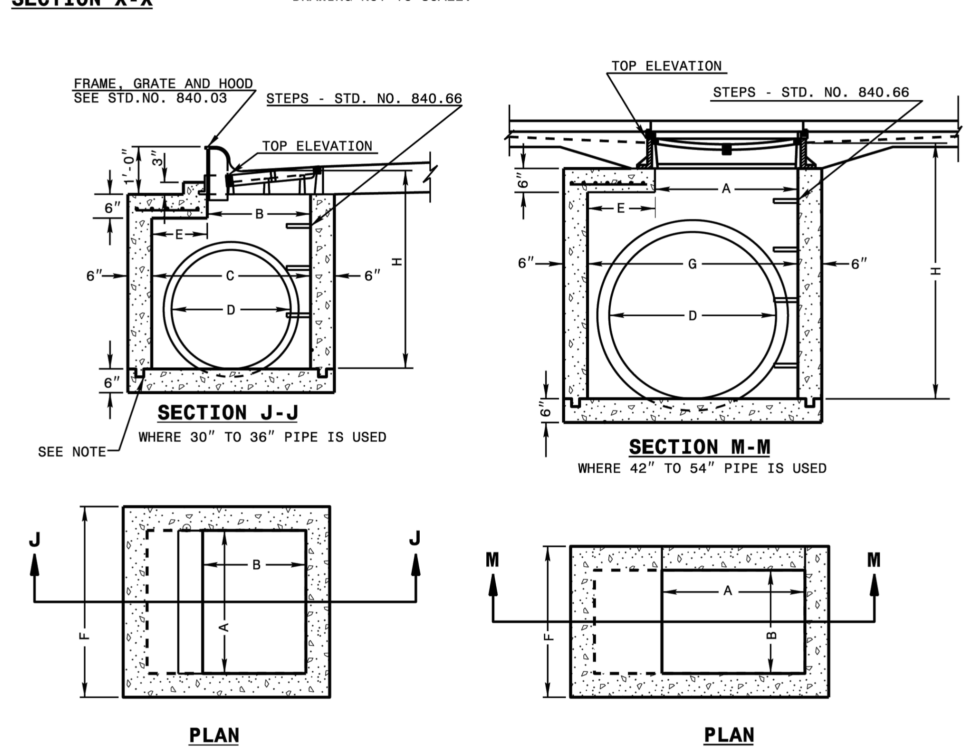

STATE OF NORTH CAROLINA DEPT. OF TRANSPORTATION DIVISION OF HIGHWAYS RALEIGH, N.C.

1-18

ROADWAY STANDARD DRAWING FOR **CONCRETE CATCH BASIN** 12" THRU 54" PIPE

SHEET 1 OF 2

840.02

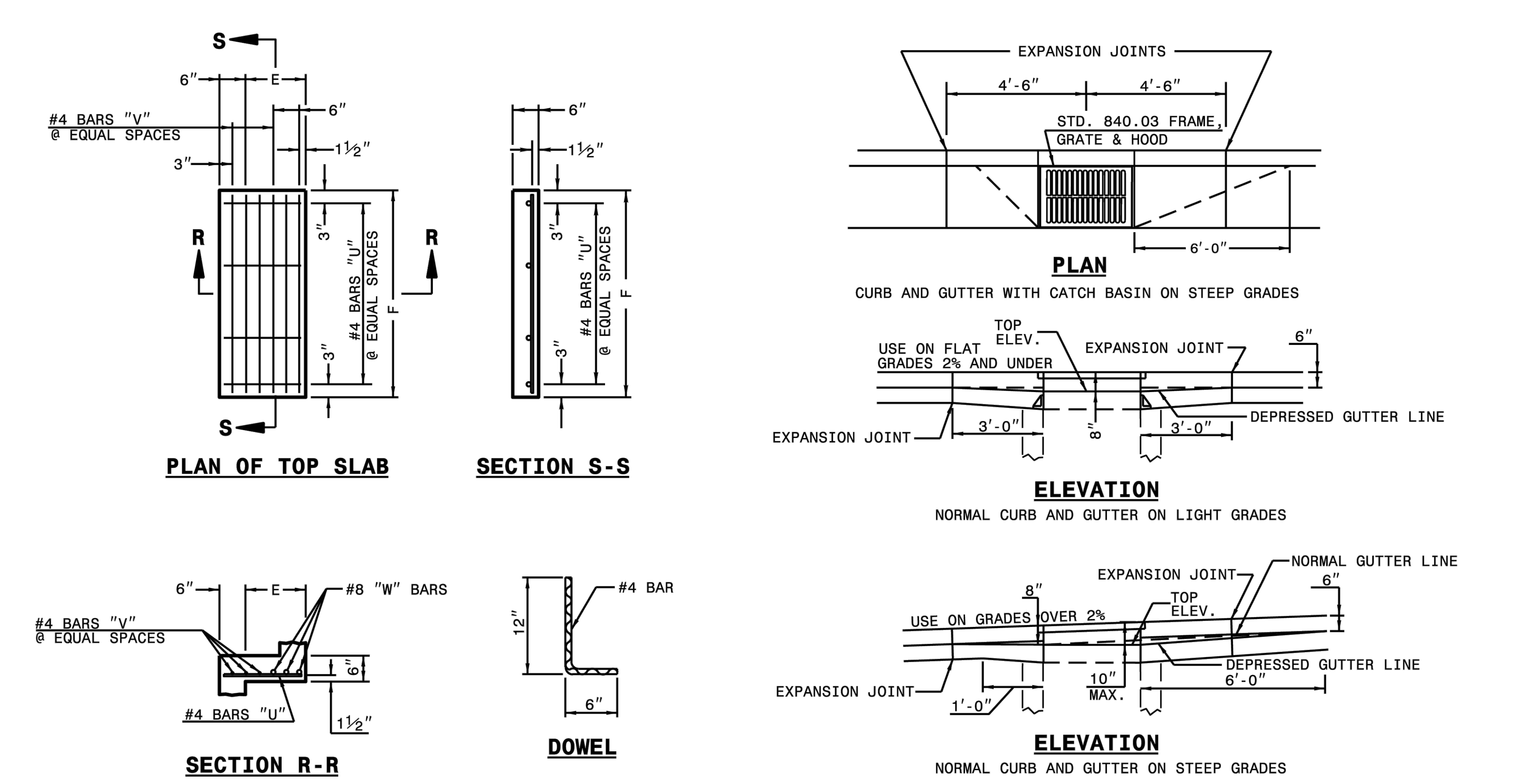

MINIMUM DIMENSIONS AND QUANTITIES FOR CONCRETE CATCH BASIN(BASED ON MIN. HEIGHT, H, WITH NO RISER) *

DIMENSIONS OF BOX AND PIPE						COVER DIMENSION		BARS-U		BARS-V		BARS-W			CU.YDS. CONC. IN BOX			DEDUCTIONS ONE PIPE	
PIPE	SPAN	WIDTH	WIDTH	SPAN	MIN. HEIGHT									TOTAL LBS.	TOP SLAB	BOTTOM SLAB	TOT. CONC. FOR MINIMUM HEIGHT, H		
D	A	B	C	G	H	E	F	NO.	LENGTH	NO.	LENGTH	NO.	LENGTH					C.M.	R.C.
12"	3'-0"	2'-2"	--	--	2'-9"	--	--	--	--	--	--	--	--	--	--	0.235	0.772	0.015	0.026
15"	3'-0"	2'-2"			3'-0"											0.235	0.829	0.023	0.036
18"	3'-0"	2'-2"			3'-3"											0.235	0.887	0.033	0.049
24"	3'-0"	2'-2"			3'-9"											0.235	1.001	0.059	0.085
30"	3'-0"	2'-2"	3'-4"		4'-3"	1'-2"	4'-0"	4	1'-5"	2	3'-9"	3	3'-9"	39	0.123	0.321	1.433	0.092	0.127
36"	3'-0"	2'-2"	3'-10"		4'-9"	1'-8"	4'-0"	4	1'-11"	3	3'-9"	3	3'-9"	43	0.161	0.358	1.714	0.132	0.178
42"	3'-0"	2'-2"		4'-5"	5'-3"	1'-5"	3'-2"	4	1'-8"	2	2'-11"	3	2'-11"	32	0.112	0.318	1.738	0.180	0.243
48"	3'-0"	2'-2"		5'-0"	5'-9"	2'-0"	3'-2"	4	2'-3"	3	2'-11"	3	2'-11"	35	0.145	0.352	2.052	0.235	0.317
54"	3'-0"	2'-2"		5'-7"	6'-3"	2'-7"	3'-2"	4	2'-10"	5	2'-11"	3	2'-11"	41	0.180	0.386	2.387	0.297	0.401

* RISER HAS .228 CUBIC YARDS OF CONCRETE PER FOOT HEIGHT

STATE OF NORTH CAROLINA DEPT. OF TRANSPORTATION DIVISION OF HIGHWAYS RALEIGH, N.C.

1-18

ROADWAY STANDARD DRAWING FOR **CONCRETE CATCH BASIN** 12" THRU 54" PIPE

SHEET 2 OF 2

840.02

NOTE: USE TYPE "E", "F" AND "G" GRATE UNLESS OTHERWISE NOTED.

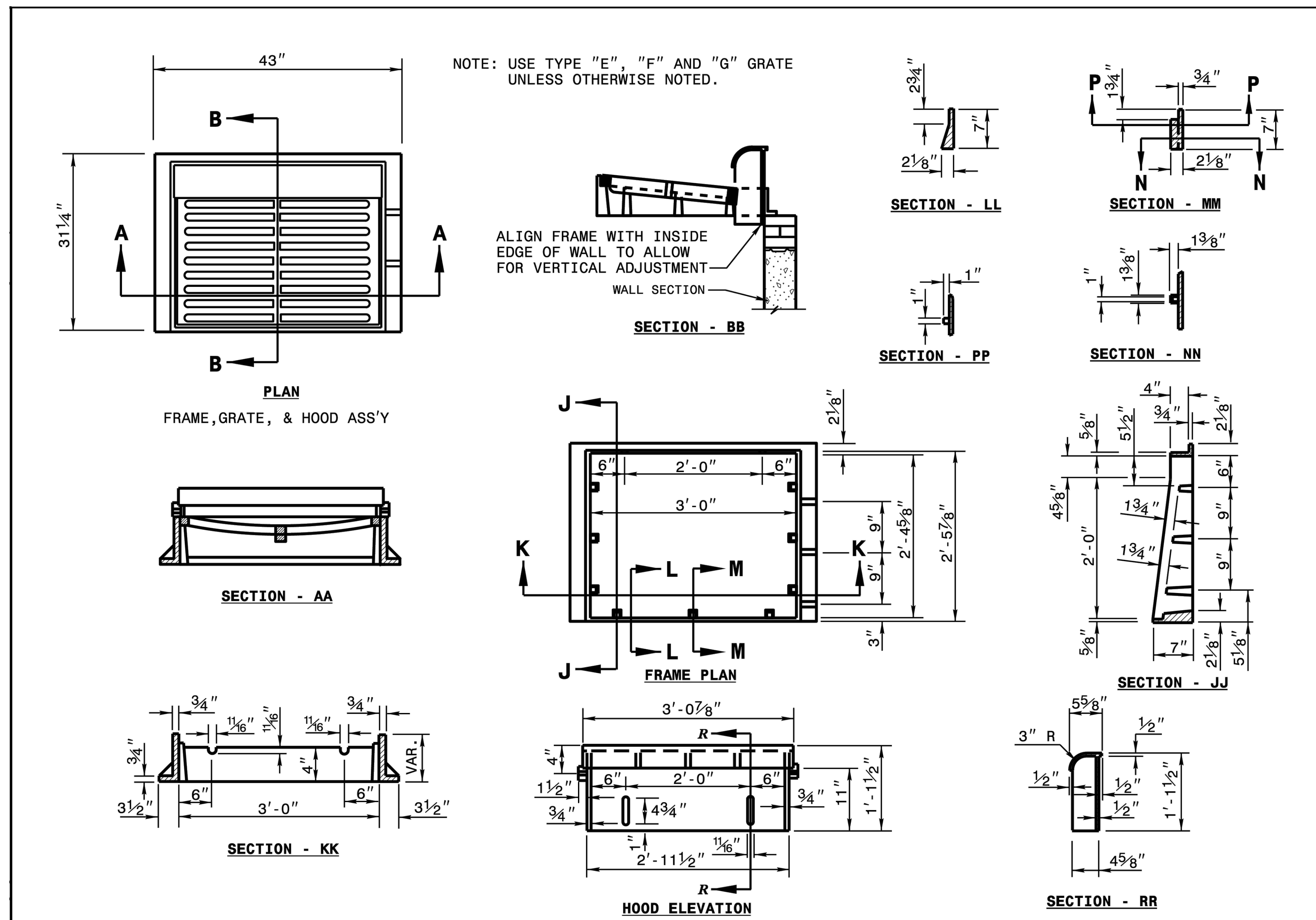

STATE OF NORTH CAROLINA DEPT. OF TRANSPORTATION DIVISION OF HIGHWAYS RALEIGH, N.C.

1-18

ROADWAY STANDARD DRAWING FOR **FRAME, GRATES, AND HOOD** FOR USE ON STANDARD CATCH BASIN

SHEET 1 OF 2

840.03

DETAIL SHOWING TYPES OF GRATES USE ACCORDING TO WATER FLOW.

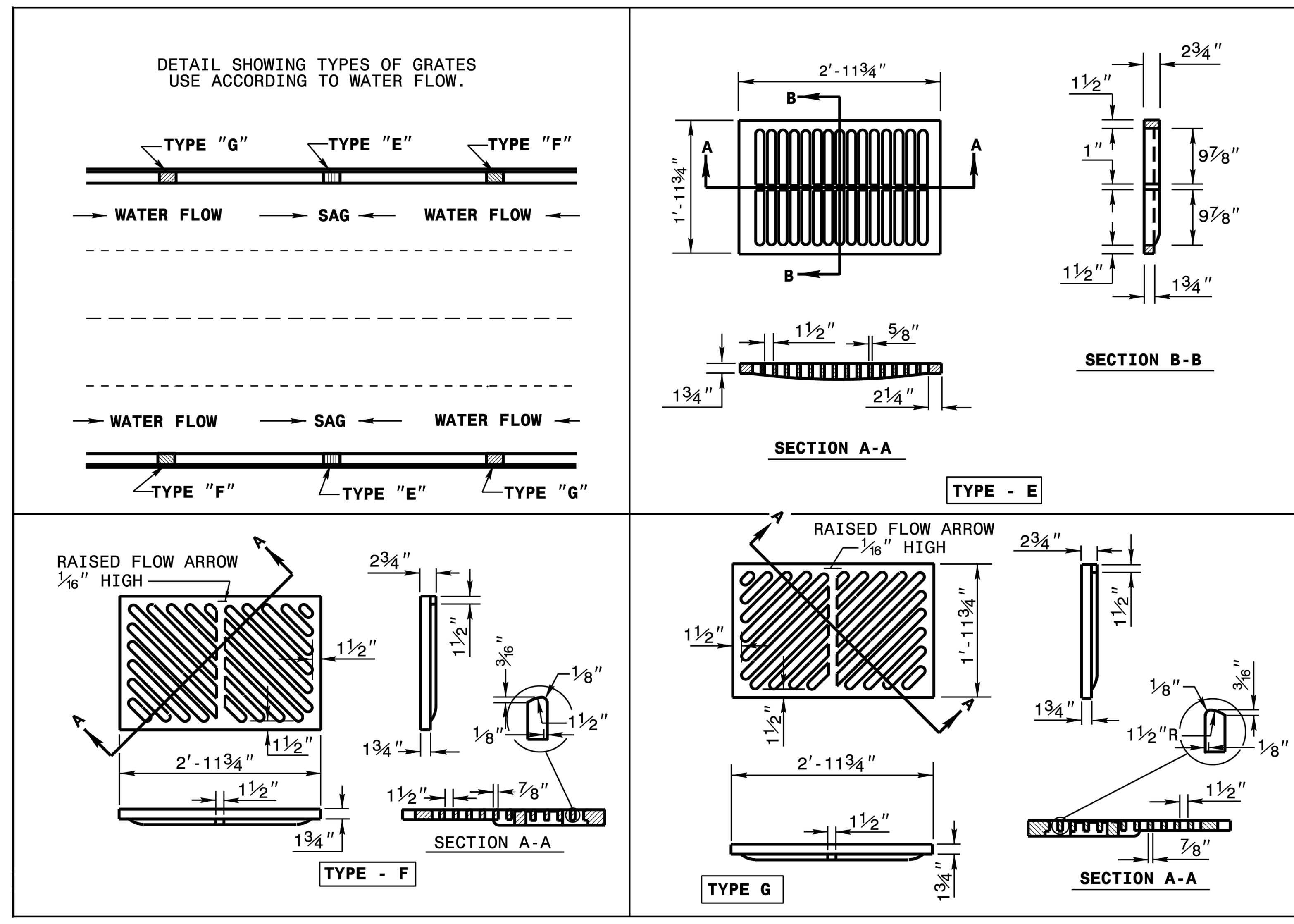

STATE OF NORTH CAROLINA DEPT. OF TRANSPORTATION DIVISION OF HIGHWAYS RALEIGH, N.C.

1-18

ROADWAY STANDARD DRAWING FOR **FRAME, GRATES, AND HOOD** FOR USE ON STANDARD CATCH BASIN

SHEET 2 OF 2

840.03

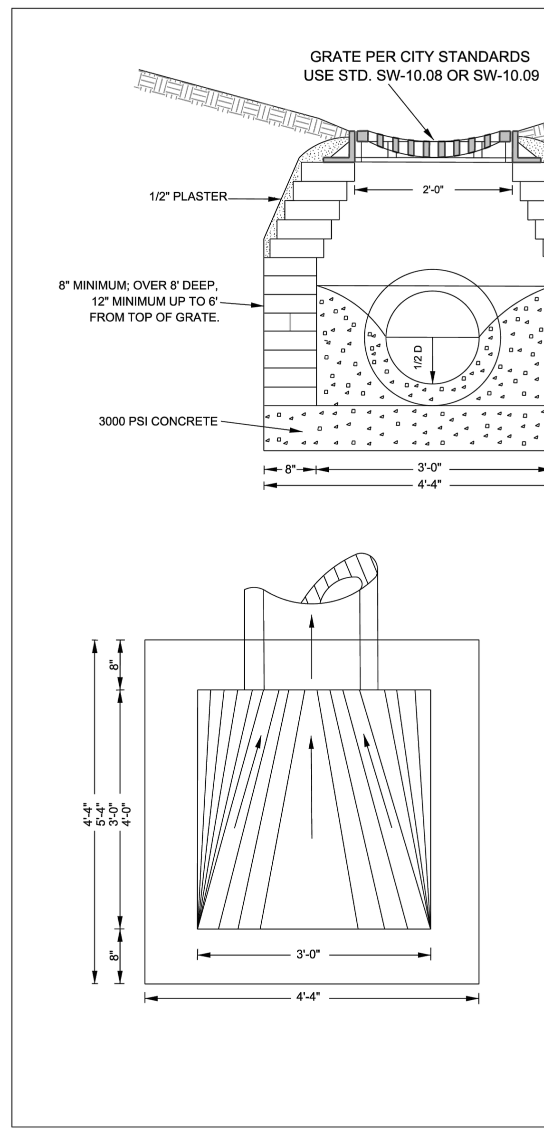

NOTES:
1. FOR 24" RCP & LARGER USE PIPE DIAMETER PLUS 12" FOR MINIMUM INSIDE DIMENSION.
2. 24" X 24" CASTING WITH 12", 15" & 18" PIPE, 24" X 36" CASTING USED WITH 24" PIPE OR LARGER. IF PLACED WITHIN PUBLIC R/W CASTING MUST BE TRAFFIC BEARING TYPE PER NCDOT STANDARDS.
3. USE 4" X 4" X 8" OR 4" X 8" X 16" SOLID CONCRETE BLOCK. CAST IN PLACE OR PRECAST CONCRETE TO MEET N.C.D.O.T. STANDARDS ACCEPTABLE.
4. STEPS SHALL BE INSTALLED IN ALL DROP INLETS OVER 3' IN DEPTH. DEPTH SHALL BE MEASURED FROM THE TOP OF GRATE TO THE INVERT OF THE DROP INLET.

CITY OF RALEIGH STANDARD DETAIL

REVISIONS | DATE: 8/2020 | NOT TO SCALE

STANDARD DROP INLET

SW-10.03

TYPICAL MH FOR STORM SEWER

PIPE SIZE	MH DIAMETER
12-24"	4'-0"
30-42"	5'-0"
48"	6'-0"
54"	8'-0"

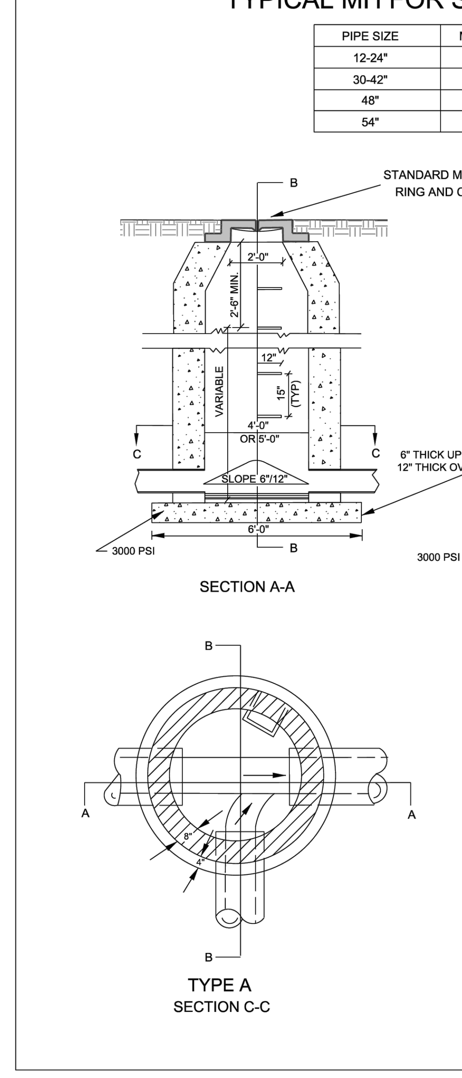

NOTES:
1. DEPTH MEASURED FROM TOP OF CASTING TO INVERT OF MANHOLE.
2. PRECAST MANHOLE COMPONENTS SHALL MEET ASTM-C-478 REQUIREMENTS.
3. SEE STANDARD. SW-10.10 FOR MANHOLE COVER DETAIL.
4. DOMESTIC CASTINGS REQUIRED WITHIN STREET RIGHT-OF-WAY.

CITY OF RALEIGH STANDARD DETAIL

REVISIONS | DATE: 8/2020 | NOT TO SCALE

STANDARD CLASS "A" MANHOLE

SW-10.05

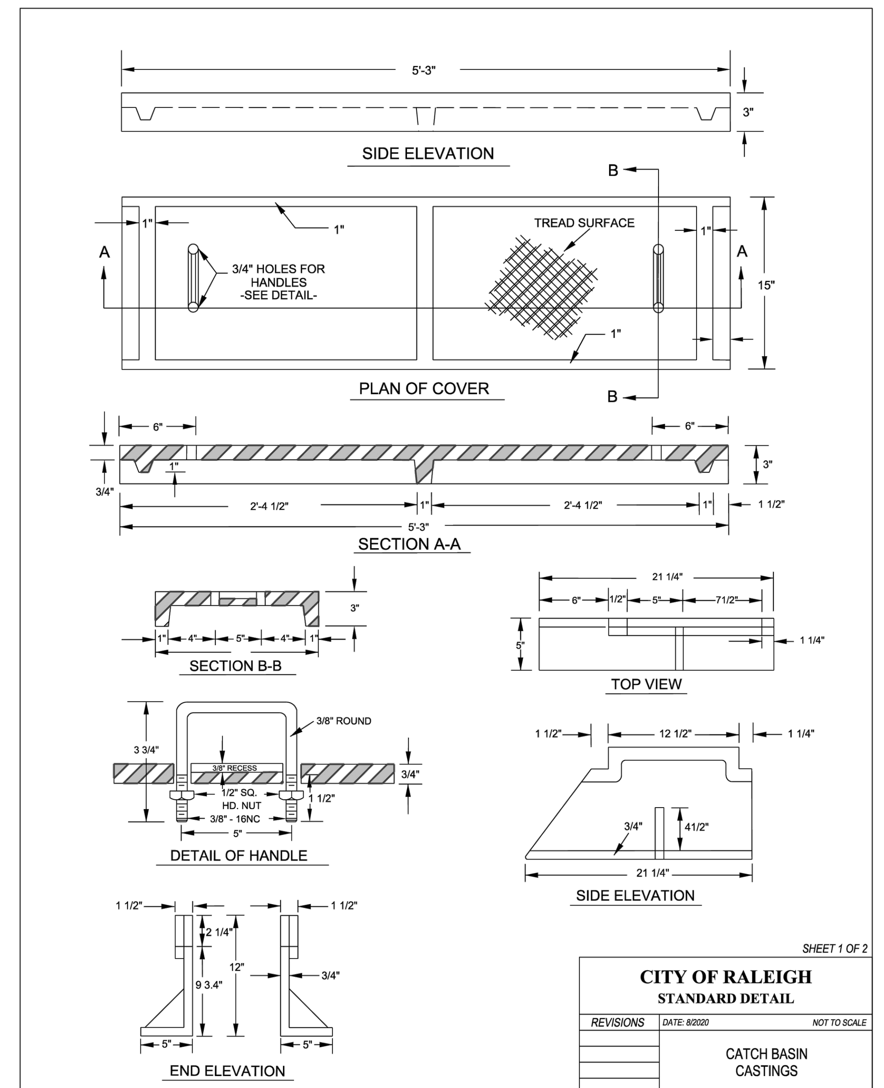

SHEET 1 OF 2

CITY OF RALEIGH STANDARD DETAIL

REVISIONS | DATE: 8/2020 | NOT TO SCALE

CATCH BASIN CASTINGS

SW-10.06.1

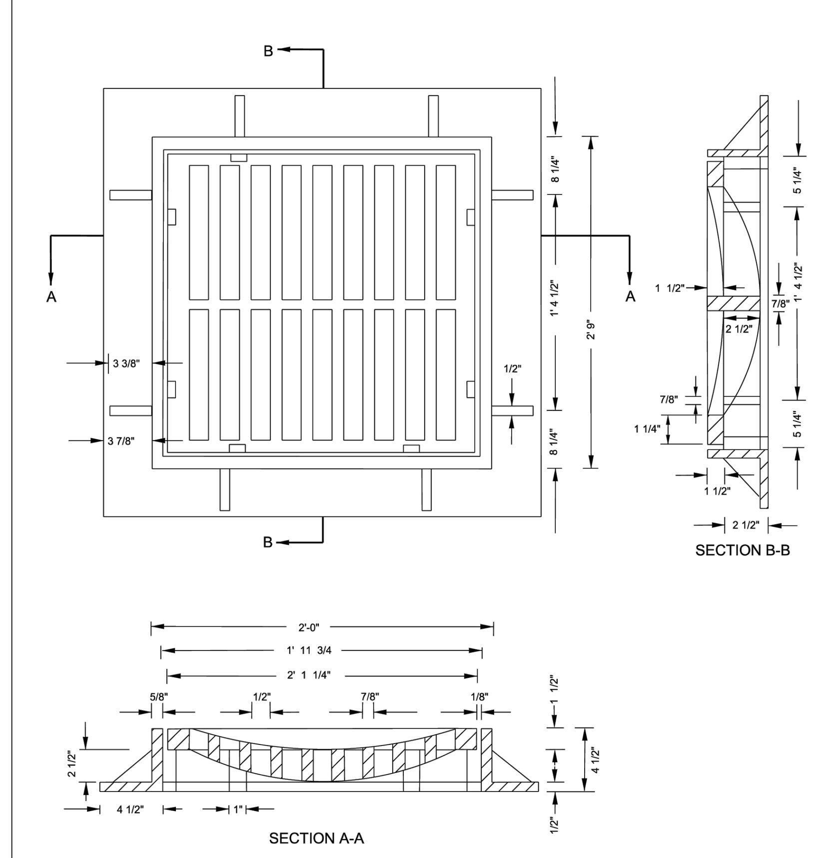

STANDARD 24" X 24" DROP INLET CASTING

CITY OF RALEIGH STANDARD DETAIL

REVISIONS | DATE: 8/2020 | NOT TO SCALE

DROP INLET CASTING

SW-10.08

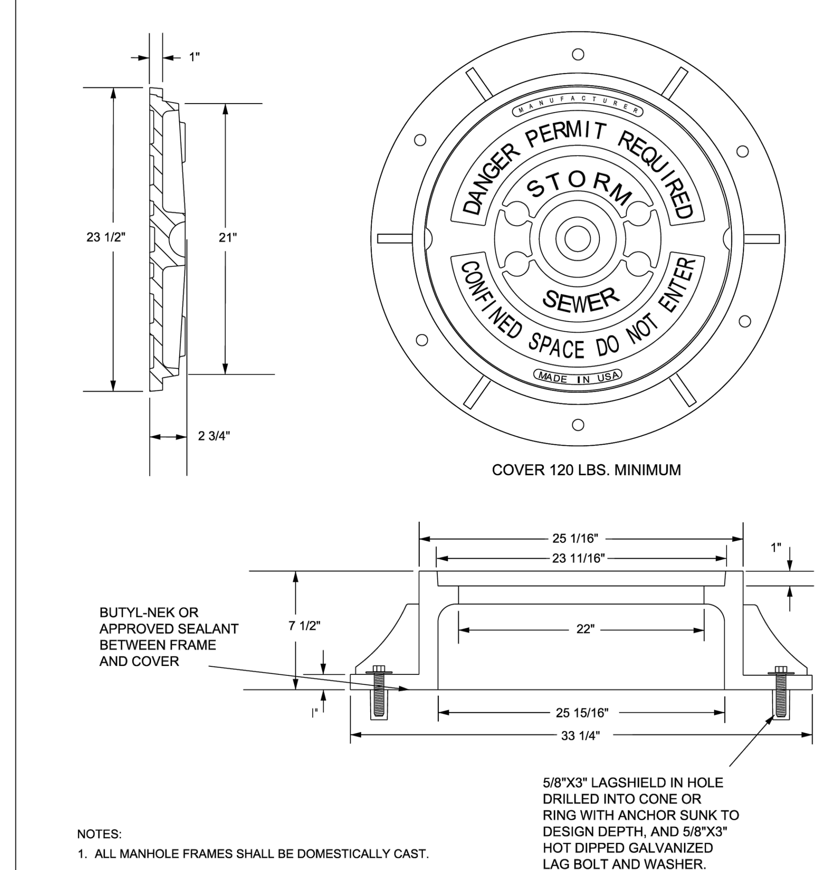

NOTES:
1. ALL MANHOLE FRAMES SHALL BE DOMESTICALLY CAST.
2. FRAME SHALL BE A MINIMUM WEIGHT OF 182 LBS. WITHIN PUBLIC ROW AND 160 LBS. WITHIN EASEMENTS.
3. COVER SHALL WEIGH A MINIMUM OF 120 LBS.
4. ALL MANHOLE FRAMES OUTSIDE OF PAVED SURFACE SHALL BE BOLTED TO THE CONE SECTION OR RING WITH A MINIMUM OF 4 BOLTS PER FRAME.

CITY OF RALEIGH STANDARD DETAIL

REVISIONS | DATE: 8/2020 | NOT TO SCALE

STANDARD STORM MANHOLE COVER

SW-10.10

CITY OF RALEIGH - PLANS AUTHORIZED FOR CONSTRUCTION

Electronic Approval: This approval is being issued electronically. This approval is valid only upon the signature of a City of Raleigh Review Officer below. The City will retain a copy of the approved plans. Any work authorized by this approval must proceed in accordance with the plans kept on file with the City. This electronic approval may not be edited once issued. Any modification to this approval once issued will invalidate this approval.

City of Raleigh Development Approval ______________________

Raleigh Water Review Officer

09/01/23

BASS, NIXON & KENNEDY, INC. CONSULTING ENGINEERS

6310 CHAPEL HILL ROAD, SUITE 250, RALEIGH, NC 27607
TELEPHONE: (919)851-4422 FAX: (919)851-8968
CERTIFICATION NUMBERS: NCBELS (C-0110); NCBOLA (C-0267)

NO.	DATE	DESCRIPTION	BY
		REVISIONS	

03-19157	PROGRESS	MRM
JOB NO.	DATE	DRAWN BY
DETAILS		
SCALE: N.T.S.		CHK BY: MDB

COBBLESTONE VILLAGE

MIXED USE DEVELOPMENT

TOWN OF ROLESVILLE, WAKE COUNTY, NORTH CAROLINA

SHEET C5.2

NOT RELEASED FOR CONSTRUCTION OR BID SOLICITATION

TOWN OF ROLESVILLE PROJECT NO.

©2019 BASS, NIXON & KENNEDY, INC. EXPRESSLY RESERVES ITS COMMON LAW COPYRIGHT AND OTHER PROPERTY RIGHTS IN THESE PLANS. THESE PLANS ARE NOT TO BE REPRODUCED, CHANGED OR COPIED IN ANY FORM OR MANNER WHATSOEVER, NOR ARE THEY TO BE ASSIGNED TO ANY THIRD PARTY WITHOUT FIRST OBTAINING THE EXPRESSED WRITTEN PERMISSION AND CONSENT OF BASS, NIXON & KENNEDY, INC.

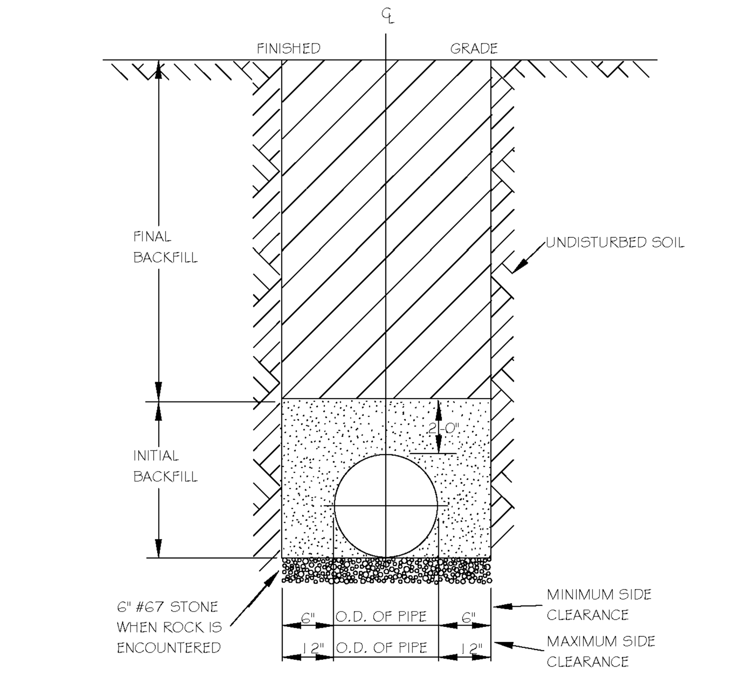

NOTES:
1. TRENCHES REQUIRING SHORING AND BRACING, DIMENSIONS SHALL BE TAKEN FROM THE INSIDE FACE OF THE SHORING AND BRACING.
2. NO ROCKS OR BOULDERS 4" OR LARGER TO BE USED IN INITIAL BACKFILL.
3. ALL BACKFILL MATERIAL SHALL BE SUITABLE NATIVE MATERIAL.
4. BACKFILL SHALL BE TAMPED IN 6" LIFTS IN TRAFFIC AREAS, 12" IN NON-TRAFFIC AREAS.
5. ACHIEVE 80% COMPACTION IN NON-TRAFFIC AREAS, AND 95% COMPACTION IN TRAFFIC AREAS.
6. IF IN EASEMENT 4" TOPSOIL, AND 12" CLEAN SELECT FILL MAY BE REQUIRED.
7. NO BOULDERS 8" IN DIAMETER OR GREATER ALLOWED IN FINAL BACKFILL.

CITY OF RALEIGH
DEPARTMENT OF PUBLIC UTILITIES
TRENCH BOTTOM DIMENSIONS & BACKFILLING REQUIREMENTS FOR DUCTILE IRON

DWG. NO.	REVISIONS	DATE	REVISIONS	DATE
S-4	D.W.C.	9-3-99		
	RRH	3-30-00		

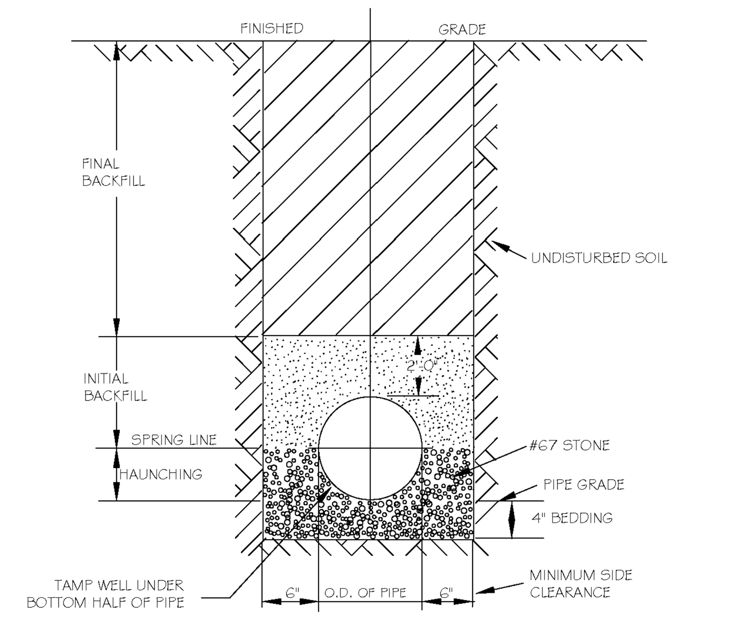

TYPICAL TRENCH BOTTOM DIMENSIONS FOR SDR 35 PVC GRAVITY PIPE

NOTES:
1. FOR TRENCHES REQUIRING SHORING AND BRACING, DIMENSIONS SHALL BE TAKEN FROM THE INSIDE FACE OF THE SHORING AND BRACING.
2. NO ROCKS OR BOULDERS 4" OR LARGER TO BE USED IN INITIAL BACKFILL.
3. ALL BACKFILL MATERIAL SHALL BE SUITABLE NATIVE MATERIAL.
4. BACKFILL SHALL BE TAMPED IN 6" LIFTS IN TRAFFIC AREAS, 12" IN NON-TRAFFIC AREAS.

CITY OF RALEIGH
DEPARTMENT OF PUBLIC UTILITIES
TRENCH BOTTOM DIMENSIONS AND BACKFILLING REQUIREMENTS FOR PVC GRAVITY SEWER MAIN

DWG. NO.	REVISIONS	DATE	REVISIONS	DATE
S-5	TO NOTES	3-1-87	D.W.C.	9-3-99
		7-2-82	RRH	3-30-00

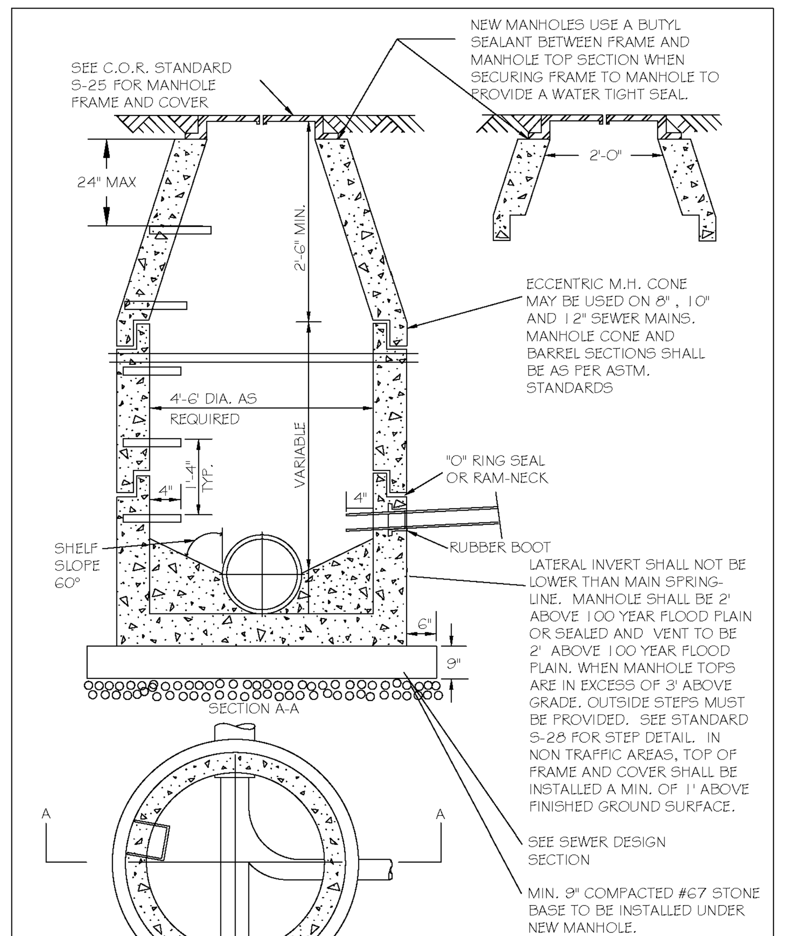

CITY OF RALEIGH
DEPARTMENT OF PUBLIC UTILITIES
STANDARD PRECAST SANITARY SEWER MANHOLE

DWG. NO.	REVISIONS	DATE	REVISIONS	DATE
S-20	Y.C.A.	12-31-92	ABB	2-21-05
	RRH	3-30-00	D.H.L.	6-16-08

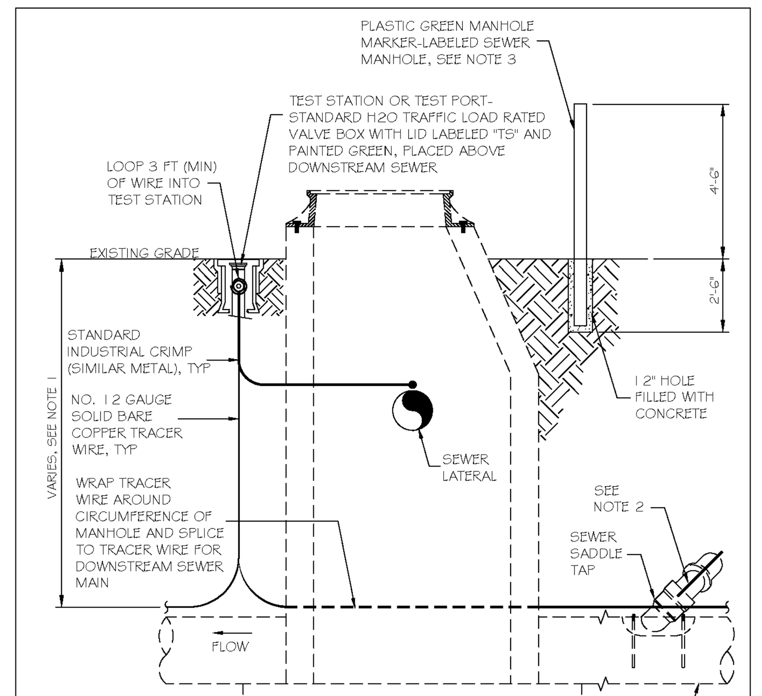

NOTES:
1. THE TRACER WIRE SHALL BE CONTINUOUS TO THE GREATEST EXTENT POSSIBLE. FOR GRAVITY MAIN AND OR LATERAL INSTALLATIONS LESS THAN 8 FT, THE TRACING WIRE SHALL BE ATTACHED TO THE PIPE. TRACER WIRE SHALL BE LAID FLAT AND SECURELY AFFIXED TO THE PIPE AT 10 FOOT INTERVALS. FOR GRAVITY MAIN AND OR LATERAL INSTALLATION DEEPER THAN 8 FT, THE TRACING WIRE SHALL BE INSTALLED AT A DEPTH OF 7-8 FT. THE WIRE SHALL BE PROTECTED FROM DAMAGE DURING THE EXECUTION OF THE WORK. NO BREAKS OF CUTS IN THE TRACER WIRE SHALL BE PERMITTED.
2. WHERE LATERAL TAPS ARE MADE BY SERVICE SADDLES, THE TRACER WIRE SHALL NOT BE ALLOWED TO TO BE PLACED BETWEEN THE SADDLE AND MAIN.
3. MANHOLE MARKERS SHALL BE PLACED ADJACENT TO MANHOLES AT THE DISCRETION OF OWNER OR OWNER'S REPRESENTATIVE.

CITY OF RALEIGH
DEPARTMENT OF PUBLIC UTILITIES
GRAVITY SEWER MAIN TRACER WIRE AND MANHOLE MARKER

DWG. NO.	REVISIONS	DATE	REVISIONS	DATE
S-20A	WKD	09-14		

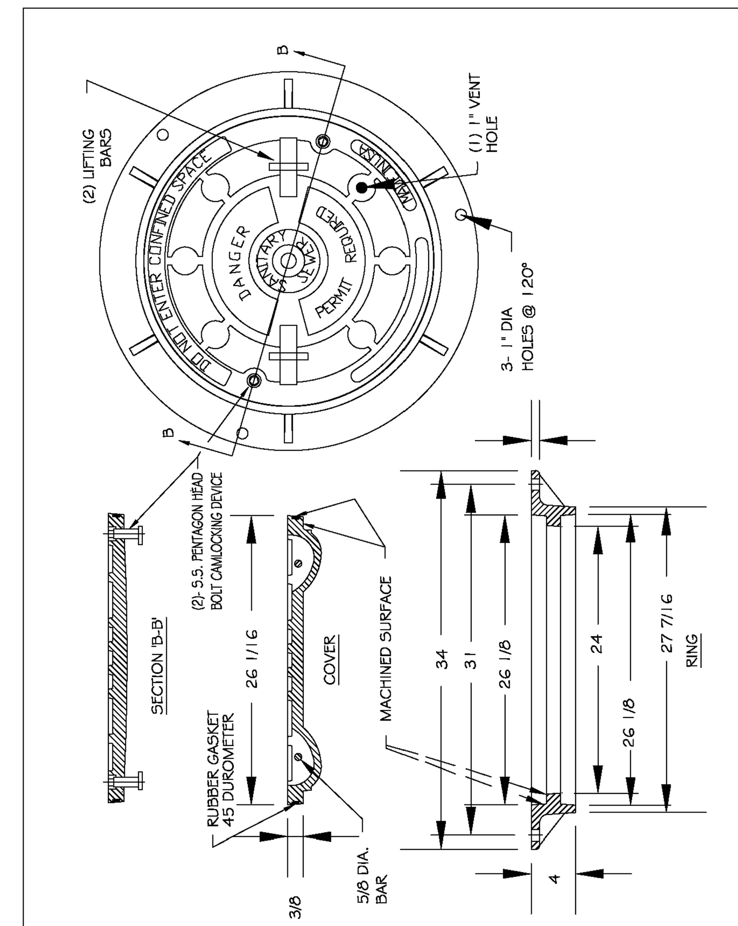

Note: solid cover required when water tight manhole specified.

CITY OF RALEIGH
DEPARTMENT OF PUBLIC UTILITIES
FLAT TOP MANHOLE COVER

DWG. NO.	REVISIONS	DATE	REVISIONS	DATE
S-25.01	3-1-87	3-1-87	A.B.B.	2-9-05
	RRH	3-30-00	D.H.L.	6-18-08

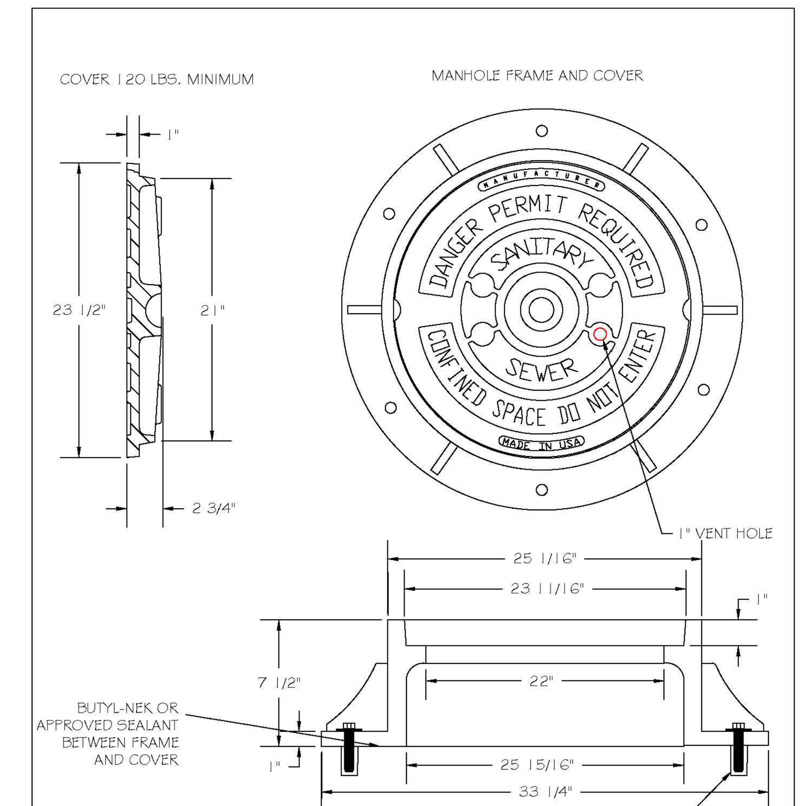

NOTES:
1) ALL MANHOLE FRAMES SHALL BE DOMESTICALLY CAST.
2) FRAME SHALL BE A MINIMUM WEIGHT OF 182 LBS. WITHIN PUBLIC ROW AND 160 LBS. WITHIN EASEMENTS.
3) COVER SHALL WEIGH A MIN. OF 120 LBS.
4) ALL MANHOLE FRAMES OUTSIDE OF PAVED SURFACES SHALL BE BOLTED TO THE CONE SECTION OR RING WITH A MINIMUM OF 4 BOLTS PER FRAME.

5/8"X3" LAGSHIELD IN HOLE DRILLED INTO CONE OR RING WITH ANCHOR SUNK TO DESIGN DEPTH, AND 3/8"X3" HOT DIPPED GALVANIZED LAG BOLT AND WASHER.

CITY OF RALEIGH
DEPARTMENT OF PUBLIC UTILITIES
STANDARD MANHOLE COVER

DWG. NO.	REVISIONS	DATE	REVISIONS	DATE
S-25	3-1-87	3-1-87	A.B.B.	2-9-05
	RRH	3-30-00	D.H.L.	6-18-08

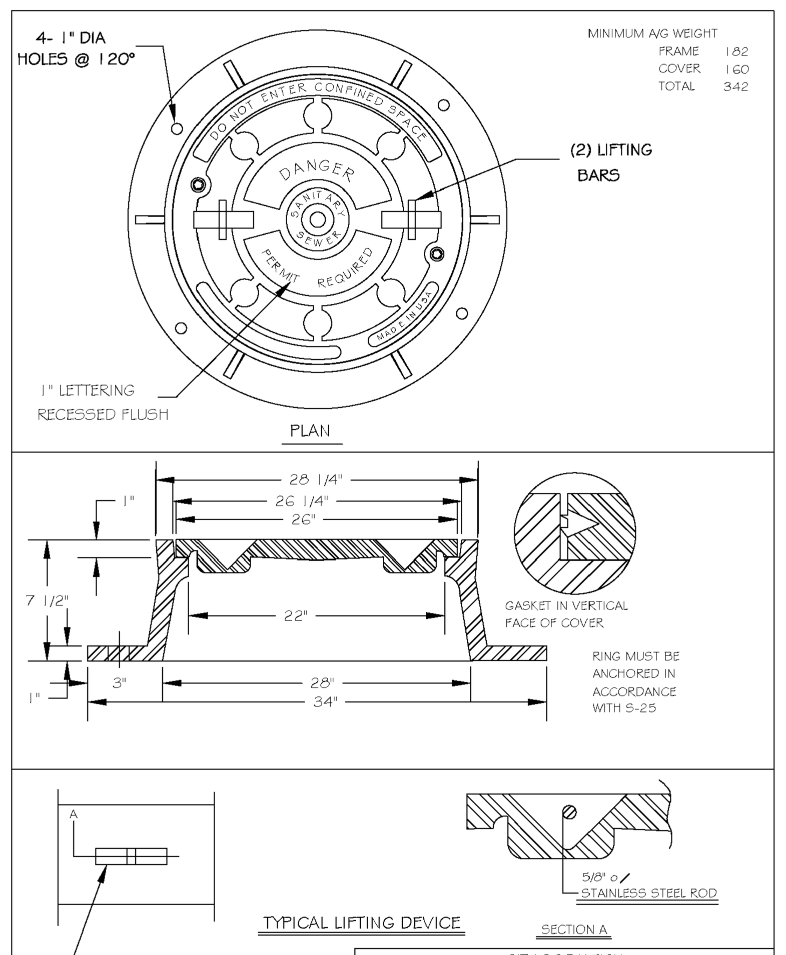

CITY OF RALEIGH
DEPARTMENT OF PUBLIC UTILITIES
MANHOLE FRAME AND WATERTIGHT COVER

DWG. NO.	REVISIONS	DATE	REVISIONS	DATE
S-26	3-1-87	3-1-87	ABB	8-29-05
	RRH	3-30-00	D.H.L.	6/18/08

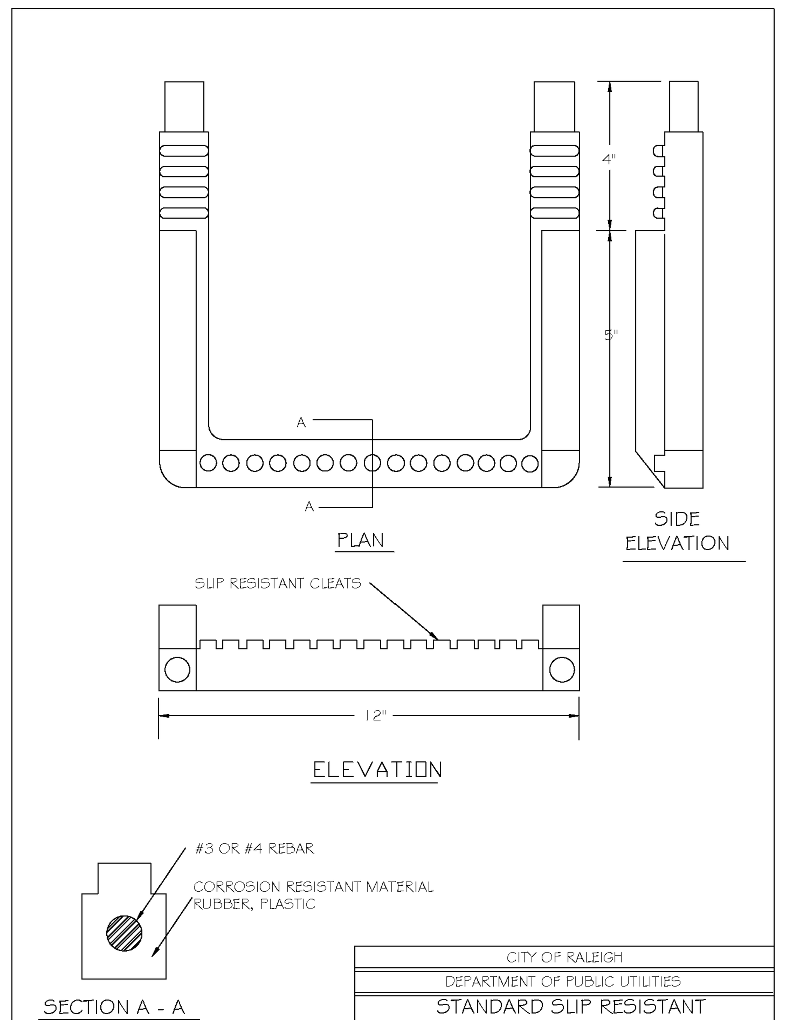

CITY OF RALEIGH
DEPARTMENT OF PUBLIC UTILITIES
STANDARD SLIP RESISTANT MANHOLE STEP DETAIL

DWG. NO.	REVISIONS	DATE	REVISIONS	DATE
S-28	RRH	3-30-00		

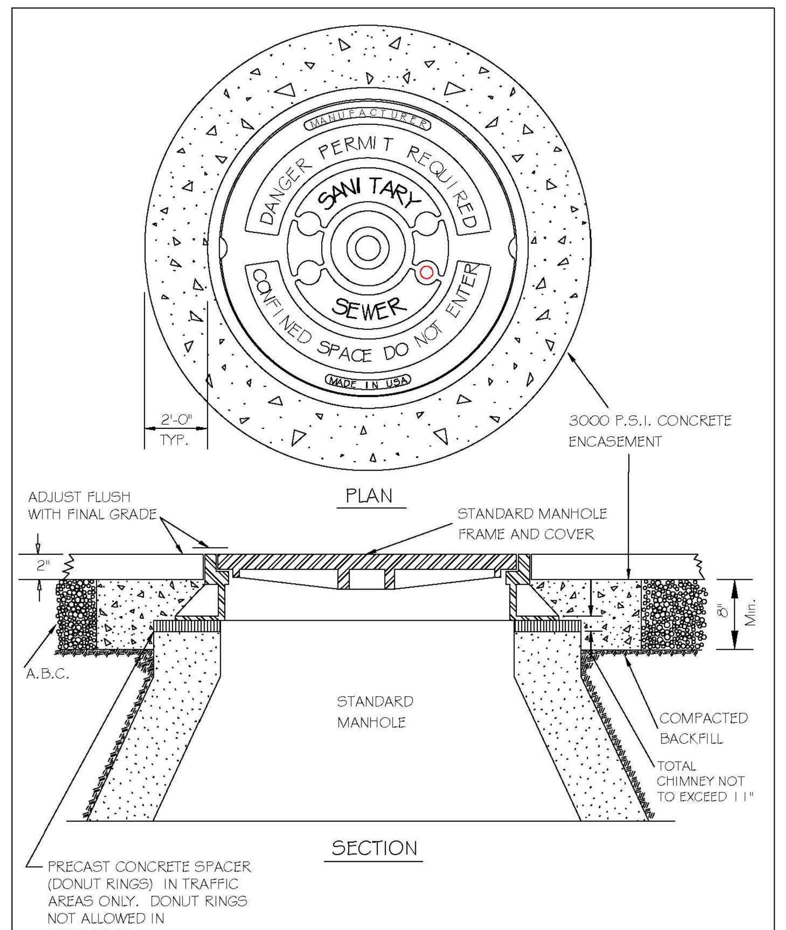

CITY OF RALEIGH
DEPARTMENT OF PUBLIC UTILITIES
STANDARD MANHOLE FRAME AND COVER DETAIL WITHIN PAVED SURFACES

DWG. NO.	REVISIONS	DATE	REVISIONS	DATE
S-29	Y.C.A.	12-31-91	ABB	9-20-04
	RRH	3-30-00	DHL	11-29-07

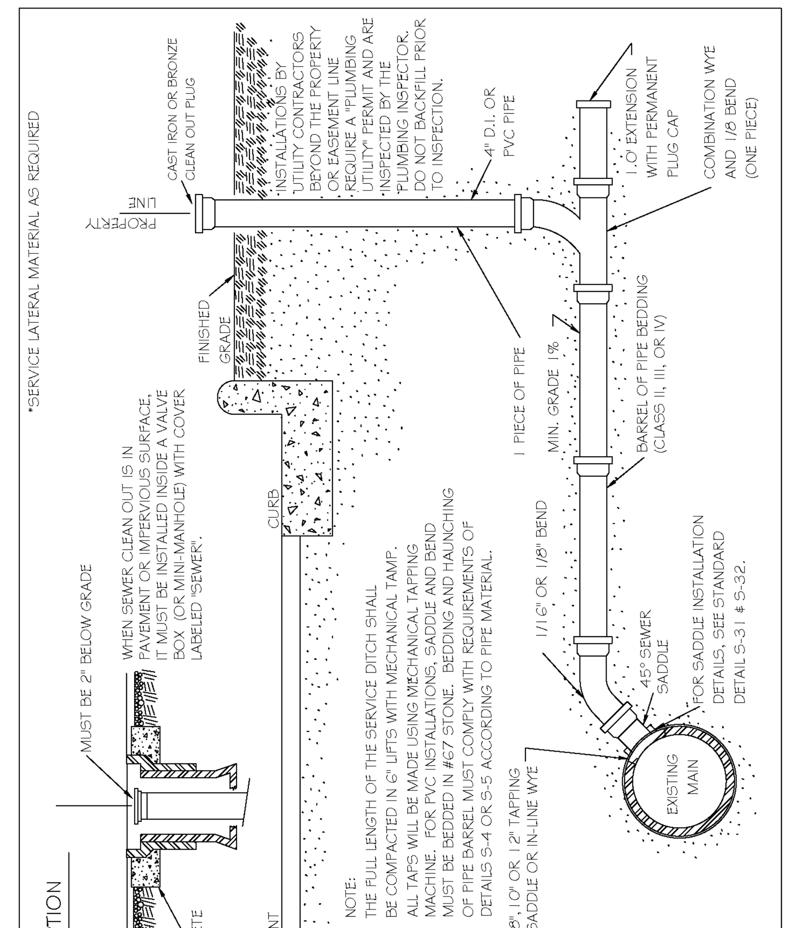

CITY OF RALEIGH
DEPARTMENT OF PUBLIC UTILITIES
TYPICAL SANITARY SEWER LATERAL CONNECTION

DWG. NO.	REVISIONS	DATE	REVISIONS	DATE
S-30	Y.C.A.	6-92	A.B.B.	4-8-04
	RRH	3-30-00	D.H.L.	6-18-08

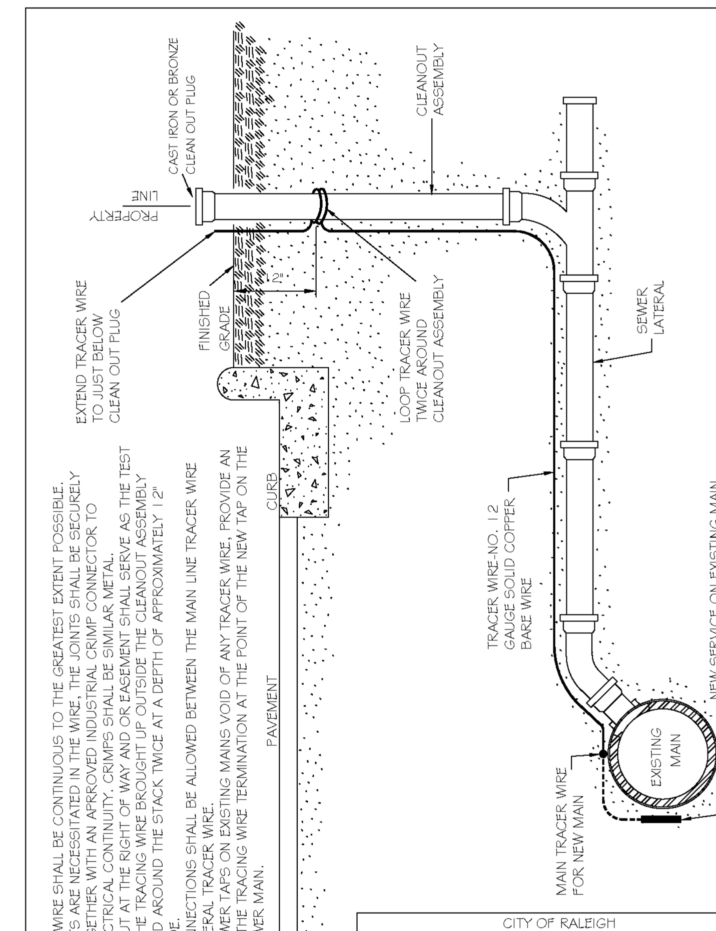

NOTES:
1. THE TRACER WIRE SHALL BE CONTINUOUS TO THE GREATEST EXTENT POSSIBLE. WHERE JOINTS ARE NECESSITATED IN THE WIRE, THE JOINTS SHALL BE SECURELY BONDED TOGETHER WITH AN APPROVED INDUSTRIAL CRIMP CONNECTOR TO PROVIDE ELECTRICAL CONTINUITY. CRIMPS SHALL BE SIMILAR METAL.
2. THE CLEANOUT AT THE RIGHT OF WAY AND OR EASEMENT SHALL SERVE AS THE TEST PORT WITH THE TRACING WIRE BROUGHT UP OUTSIDE THE CLEANOUT ASSEMBLY AND WRAPPED AROUND THE STACK TWICE AT A DEPTH OF APPROXIMATELY 12" BELOW GRADE.
3. SPLICED CONNECTIONS SHALL BE ALLOWED BETWEEN THE MAIN LINE TRACER WIRE AND THE LATERAL TRACER WIRE.
4. FOR NEW SEWER TAPS ON EXISTING MAINS VOID OF ANY TRACER WIRE, PROVIDE AN ANODE FOR THE TRACING WIRE TERMINATION AT THE POINT OF THE NEW TAP ON THE EXISTING SEWER MAIN.

CITY OF RALEIGH
DEPARTMENT OF PUBLIC UTILITIES
TYPICAL SANITARY SEWER LATERAL TRACER WIRE

DWG. NO.	REVISIONS	DATE	REVISIONS	DATE
S-30A	WKD	9-14		

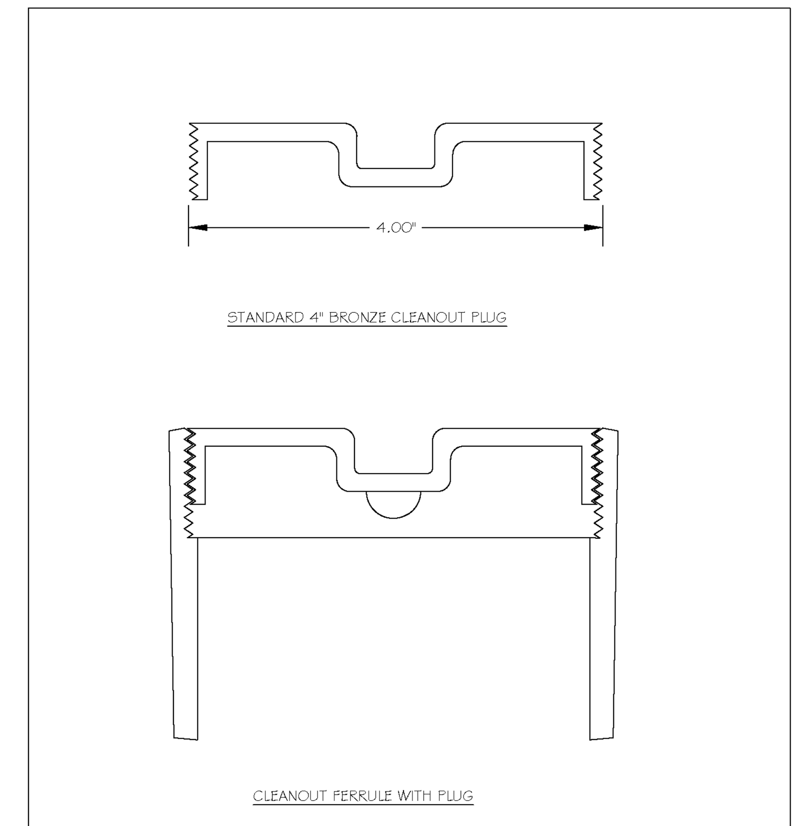

STYLES ACCEPTED:
INVERTED NUT
RAISED NUT

CITY OF RALEIGH
DEPARTMENT OF PUBLIC UTILITIES
4" CLEANOUT PLUG

DWG. NO.	REVISIONS	DATE	REVISIONS	DATE
S-34		3-1-87	RRH	3-30-00
	D.W.C.	3-27-98		

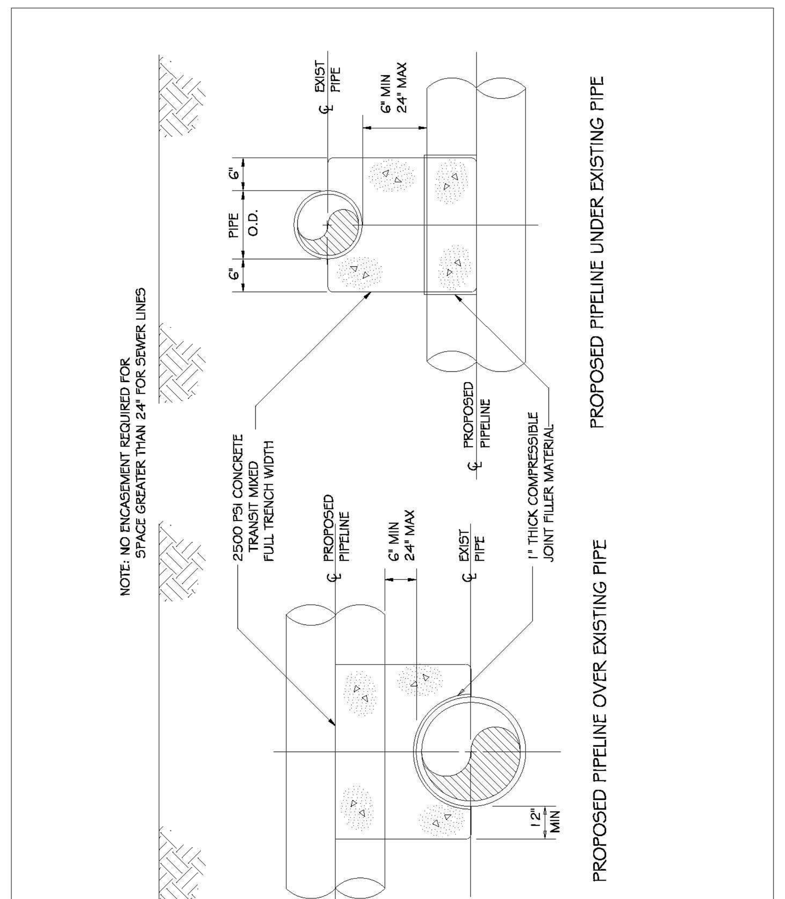

CITY OF RALEIGH
DEPARTMENT OF PUBLIC UTILITIES
CONCRETE CRADLE PROTECTION FOR SEWER LINE CROSSINGS

DWG. NO.	REVISIONS	DATE	REVISIONS	DATE
S-49	DHL	2-20-08		

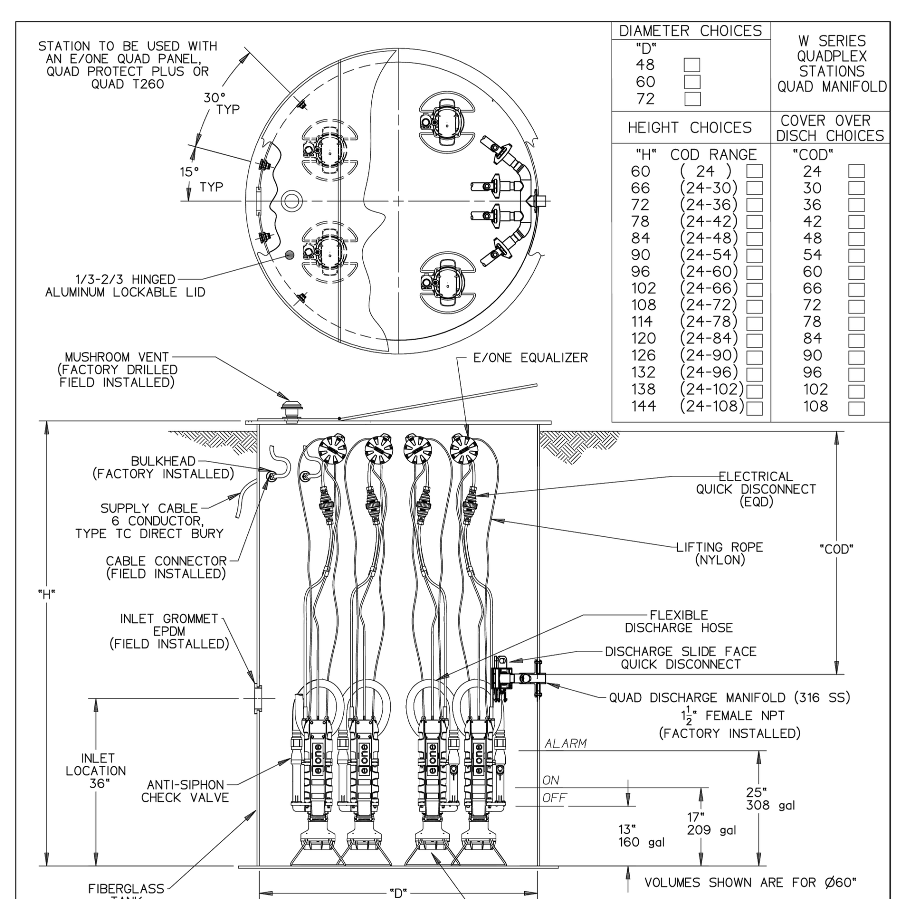

DIAMETER CHOICES "D"	W SERIES QUADPLEX STATIONS QUAD MANIFOLD
48 ☐	
60 ☐	
72 ☐	

HEIGHT CHOICES "H"	COD RANGE	COVER OVER DISCH CHOICES "COD"
60	(24) ☐	24 ☐
66	(24-30) ☐	30 ☐
72	(24-36) ☐	36 ☐
78	(24-42) ☐	42 ☐
84	(24-48) ☐	48 ☐
90	(24-54) ☐	54 ☐
96	(24-60) ☐	60 ☐
102	(24-66) ☐	66 ☐
108	(24-72) ☐	72 ☐
114	(24-78) ☐	78 ☐
120	(24-84) ☐	84 ☐
126	(24-90) ☐	90 ☐
132	(24-96) ☐	96 ☐
138	(24-102) ☐	102 ☐
144	(24-108) ☐	108 ☐

NOTE:
- 4" & 6" INLETS ARE EDPM GROMMETS
- 8" DWV INLET IS A CAST IRON CAULKING HUB
- 8" DR35 INLET IS A CAST IRON CAULKING HUB AND A FERNCO FITTING

INLET CHOICES
4" DWV PIPE (4.50 OD) ☐
4" DR35 PIPE (4.22 OD) ☐
6" DWV PIPE (6.63 OD) ☐
6" DR35 PIPE (6.28 OD) ☐
8" DWV PIPE (8.63 OD) ☐
8" DR35 PIPE (8.40 OD) ☐

SGS		08/29/18	2	1/32
DR BY	CHK'D	DATE	ISSUE	SCALE

e|one SEWER SYSTEMS
DETAIL SHEET, W SERIES QUAD, W/ MANIFOLD
ESD 18-0010

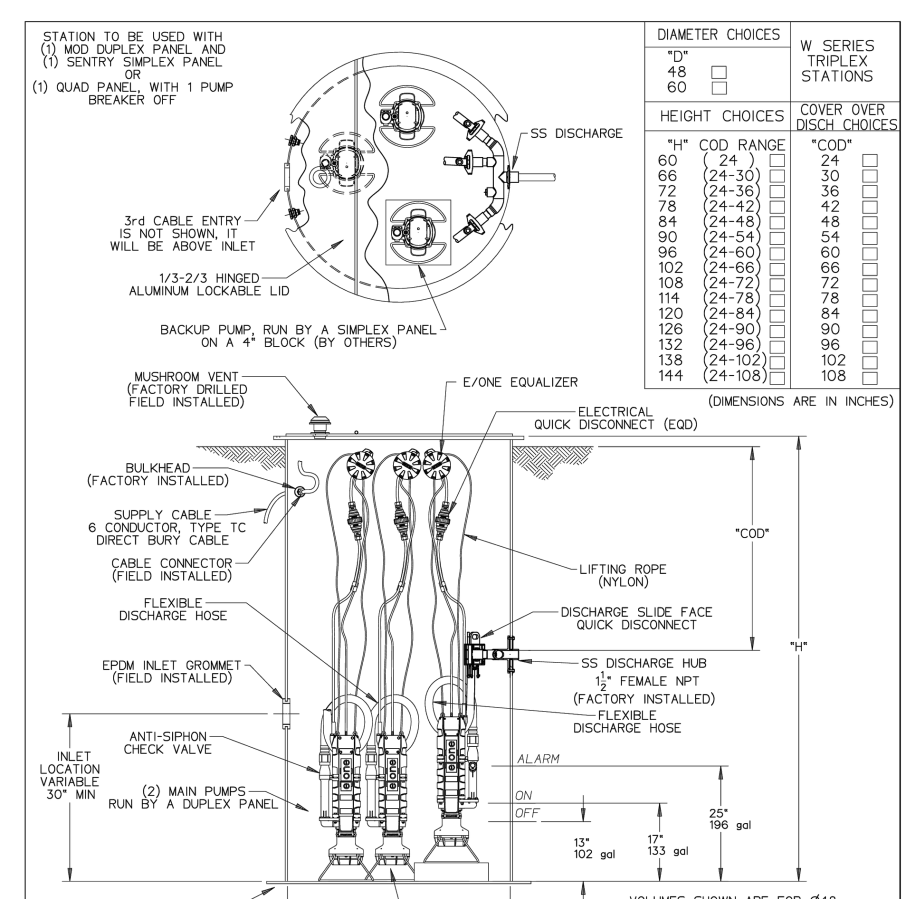

DIAMETER CHOICES "D"	W SERIES TRIPLEX STATIONS
48 ☐	
60 ☐	

HEIGHT CHOICES "H"	COD RANGE	COVER OVER DISCH CHOICES "COD"
60	(24) ☐	24 ☐
66	(24-30) ☐	30 ☐
72	(24-36) ☐	36 ☐
78	(24-42) ☐	42 ☐
84	(24-48) ☐	48 ☐
90	(24-54) ☐	54 ☐
96	(24-60) ☐	60 ☐
102	(24-66) ☐	66 ☐
108	(24-72) ☐	72 ☐
114	(24-78) ☐	78 ☐
120	(24-84) ☐	84 ☐
126	(24-90) ☐	90 ☐
132	(24-96) ☐	96 ☐
138	(24-102) ☐	102 ☐
144	(24-108) ☐	108 ☐

(DIMENSIONS ARE IN INCHES)

INLET CHOICES
4" DWV PIPE (4.50 OD) ☐
4" DR35 PIPE (4.22 OD) ☐
6" DWV PIPE (6.63 OD) ☐
6" DR35 PIPE (6.28 OD) ☐

SGS		09/10/18	1	1/32
DR BY	CHK'D	DATE	ISSUE	SCALE

e|one SEWER SYSTEMS
DETAIL SHEET W SERIES TRIPLEX, QUAD MANIFOLD
ESD 18-0048

CITY OF RALEIGH - PLANS AUTHORIZED FOR CONSTRUCTION

Electronic Approval: This approval is being issued electronically. This approval is valid only upon the signature of a City of Raleigh Review Officer below. The City will retain a copy of the approved plans. Any work authorized by this approval must proceed in accordance with the plans kept on file with the City. This electronic approval may not be edited once issued. Any modification to this approval once issued will invalidate this approval.

City of Raleigh Development Approval ____________________

Raleigh Water Review Officer

09/01/23

BASS, NIXON & KENNEDY, INC.
CONSULTING ENGINEERS
6310 CHAPEL HILL ROAD, SUITE 250, RALEIGH, NC 27607
TELEPHONE: (919)851-4422 FAX: (919)851-8968
CERTIFICATION NUMBERS: NCBELS (C-0110); NCBOLA (C-0267)

REVISIONS

NO.	DATE	DESCRIPTION	BY

03-19157	PROGRESS	MRM
JOB NO.	DATE	DRAWN BY

DETAILS

SCALE: N.T.S. CHK BY: MDB

COBBLESTONE VILLAGE
MIXED USE DEVELOPMENT
TOWN OF ROLESVILLE, WAKE COUNTY, NORTH CAROLINA

SHEET C5.3

TOWN OF ROLESVILLE PROJECT NO.

NOT RELEASED FOR CONSTRUCTION OR BID SOLICITATION

©2019 BASS, NIXON & KENNEDY, INC. EXPRESSLY RESERVES ITS COMMON LAW COPYRIGHT AND OTHER PROPERTY RIGHTS IN THESE PLANS. THESE PLANS ARE NOT TO BE REPRODUCED, CHANGED OR COPIED IN ANY FORM OR MANNER WHATSOEVER, NOR ARE THEY TO BE ASSIGNED TO ANY THIRD PARTY WITHOUT FIRST OBTAINING THE EXPRESSED WRITTEN PERMISSION AND CONSENT OF BASS, NIXON & KENNEDY, INC.

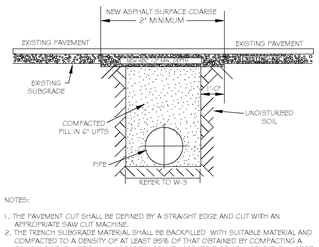

NOTES:
1. THE PAVEMENT CUT SHALL BE DEFINED BY A STRAIGHT EDGE AND CUT WITH AN APPROPRIATE SAW CUT MACHINE.
2. THE TRENCH SUBGRADE MATERIAL SHALL BE BACKFILLED WITH SUITABLE MATERIAL AND COMPACTED TO A DENSITY OF AT LEAST 95% OF THAT OBTAINED BY COMPACTING A SAMPLE OF THE MATERIAL IN ACCORDANCE WITH AASHTO T-99 AS MODIFIED BY NCDOT.
3. THE FINAL 1' OF FILL SHALL CONSIST OF ABC MATERIAL COMPACTED TO A DENSITY EQUAL TO 100% OF THAT OBTAINED BY COMPACTING A SAMPLE OF THE MATERIAL IN ACCORDANCE WITH AASHTO T-80 AS MODIFIED BY NCDOT.
4. THE ENTIRE THICKNESS/ VERTICAL EDGE OF CUT SHALL BE TACKED.
5. THE SAME DEPTH OF PAVEMENT MATERIAL WHICH EXISTS SHALL BE REINSTALLED, BUT IN NO CASE SHALL THE ASPHALT BE LESS THAN 2" THICK.
6. THE ASPHALT PAVEMENT MATERIAL SHALL BE INSTALLED AND COMPACTED THOROUGHLY WITH A SMOOTH DRUM ROLLER TO ACHIEVE A SMOOTH LEVEL PATCH.
7. REFER TO CITY OF RALEIGH STANDARDS FOR TRENCHES AND PIPE BEDDING, W-3, FOR ADDITIONAL DETAILS.
8. NO HAND PATCHING ALLOWED.
9. PAVEMENT CUTS WITHIN NCDOT ROW SHALL CONFORM TO THE APPROVED ON SITE ENCROACHMENT PERMIT.

CITY OF RALEIGH
DEPARTMENT OF PUBLIC UTILITIES
STANDARD ASPHALT PAVEMENT PATCH DETAIL

DWG. NO.	REVISIONS	DATE	REVISIONS	DATE
W-2	KRH	3-31-00	A.B.S.	4-16-04
	D.W.C.	11-1-99	J.F.S.	10-29-10

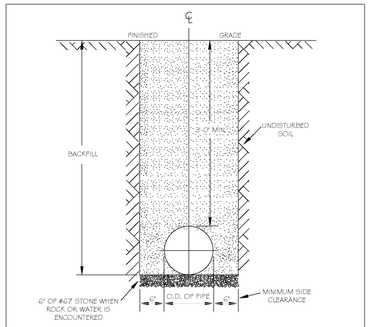

NOTES:
1. TRENCHES REQUIRING SHORING AND BRACING, DIMENSIONS SHALL BE TAKEN FROM THE INSIDE FACE OF THE SHORING AND BRACING.
2. NO ROCKS OR BOULDERS 4" OR LARGER TO BE USED IN BACKFILL.
3. ALL BACKFILL MATERIAL SHALL BE SUITABLE NATIVE MATERIAL.
4. BACKFILL SHALL BE TAMPED IN 6" LIFTS.
5. ACHIEVE 95% COMPACTION IN BACKFILL.

CITY OF RALEIGH
DEPARTMENT OF PUBLIC UTILITIES
TRENCH BOTTOM DIMENSIONS & BACKFILLING REQUIREMENTS FOR DUCTILE IRON

DWG. NO.	REVISIONS	DATE	REVISIONS	DATE
W-3	D.W.C.	3-3-99	A.B.S.	2-15-05
	KRH	3-31-00	J.F.S.	10-29-10

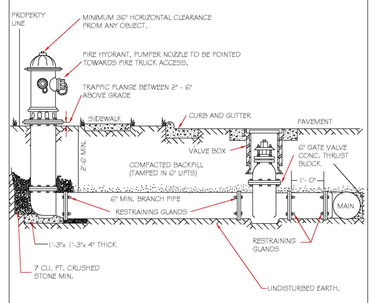

NOTES:
1. FIRE HYDRANT SHALL BE AS MANUFACTURED: MUELLER, AMERICAN DARLING, KENNEDY, MIH, WATEROUS, CLOW, EAST JORDAN IRON WORKS, OR US PIPE.
2. BRANCH PIPE SHALL BE DUCTILE IRON AWWA C150-96.
3. 6" GATE VALVE SHALL BE AWWA C500-96 OPEN LEFT.
4. STEEL RODS AND BOLTS SHALL BE ¾" HOT DIPPED GALVANIZED.
5. FIRE HYDRANTS WILL BE INSTALLED IN TRUE VERTICAL POSITION
RODS SHALL NOT BE COUPLED MORE THAN ONCE. IF THE LENGTH FROM THE VALVE TO THE HYDRANT EXCEEDS 20' THEN A MECHANICAL RESTRAINING GLAND WITH A REBAR CAGE SHALL BE INSTALLED NO MORE THAN 10' FROM HYDRANT AND POURED IN CONCRETE.
FIRE HYDRANTS TO BE LOCATED IN ROW OR 2 FOOT EASEMENT ADJACENT TO ROW

ANYTIME SITE WORK, CONSTRUCTION, ROAD WORK, OR ANY OTHER WORK CHANGES THE GRADE OF THE FIRE HYDRANT, THE PERSON RESPONSIBLE FOR THE WORK IS RESPONSIBLE FOR ADJUSTING THE FIRE HYDRANT TO STAY WITHIN COMPLIANCE.

CITY OF RALEIGH
DEPARTMENT OF PUBLIC UTILITIES
STANDARD FIRE HYDRANT INSTALLATION DETAIL

DWG. NO.	REVISIONS	DATE	REVISIONS	DATE
W-4	ABS	4-6-04	FW	8/17/09
	DHL	2/14/08		

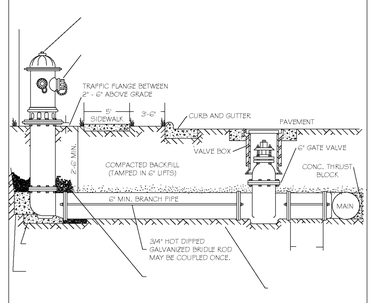

NOTES:
1. FIRE HYDRANT SHALL BE AS MANUFACTURED: MUELLER, AMERICAN DARLING, KENNEDY, MIH, WATEROUS, CLOW, EAST JORDAN IRON WORKS, OR US PIPE.
2. BRANCH PIPE SHALL BE DUCTILE IRON AWWA C150-96.
3. 6" GATE VALVE SHALL BE AWWA C500-96 OPEN LEFT.
4. STEEL RODS AND BOLTS SHALL BE ¾" HOT DIPPED GALVANIZED.
5. FIRE HYDRANTS WILL BE INSTALLED IN TRUE VERTICAL POSITION
RODS SHALL NOT BE COUPLED MORE THAN ONCE. IF THE LENGTH FROM THE VALVE TO THE HYDRANT EXCEEDS 20' THEN A MECHANICAL RESTRAINING GLAND WITH A REBAR CAGE SHALL BE INSTALLED NO MORE THAN 10' FROM HYDRANT AND POURED IN CONCRETE.
FIRE HYDRANTS TO BE LOCATED IN ROW OR 2 FOOT EASEMENT ADJACENT TO ROW

ANYTIME SITE WORK, CONSTRUCTION, ROAD WORK, OR ANY OTHER WORK CHANGES THE GRADE OF THE FIRE HYDRANT, THE PERSON RESPONSIBLE FOR THE WORK IS RESPONSIBLE FOR ADJUSTING THE FIRE HYDRANT TO STAY WITHIN COMPLIANCE.

CITY OF RALEIGH
DEPARTMENT OF PUBLIC UTILITIES
STANDARD FIRE HYDRANT INSTALLATION DETAIL

DWG. NO.	REVISIONS	DATE	REVISIONS	DATE
W-4a	ABS	4-6-04		

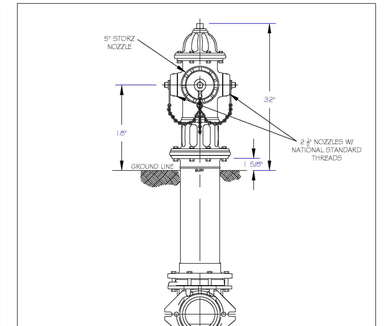

NOTES:
1. RALEIGH PUBLIC HYDRANTS SHALL BE PAINTED SOLID RED.
2. KNIGHTDALE, 4 KOLESVILLE PUBLIC HYDRANTS SHALL BE PAINTED RED W/SILVER OPERATING NUTS.
3. ZEBULON PUBLIC HYDRANTS SHALL BE PAINTED RED W/ SILVER BONNETS AND OPERATING NUTS.
4. WAKE FOREST AND GARNER, AND WENDELL PUBLIC AND PRIVATE HYDRANTS TO BE PAINTED SAFETY YELLOW W/SILVER, CAPS AND OPERATING NUTS.
5. OPERATING NUTS ON HYDRANTS CONNECTED TO PUBLIC MAINS LARGER THAN 12" SHALL BE PAINTED BLACK.

CITY OF RALEIGH
DEPARTMENT OF PUBLIC UTILITIES
RALEIGH, GARNER, KNIGHTDALE, KOLESVILLE, WAKE FOREST, WENDELL & ZEBULON
STANDARD FIRE HYDRANT WITH 5" STORZ PUMPER NOZZLE

DWG. NO.	REVISIONS	DATE	REVISIONS	DATE
W-5	KRH	3-31-00	DHL	2-18-08

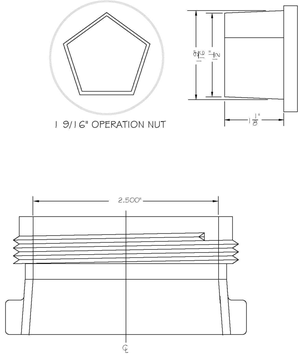

CITY OF RALEIGH
DEPARTMENT OF PUBLIC UTILITIES
HYDRANT OPERATING NUT AND 2 1/2" OUTLET THREADS

DWG. NO.	REVISIONS	DATE	REVISIONS	DATE
W-6	KRH	3-31-00	DHL	2-15-08
	A.B.S.	4-13-04	J.F.S.	11-1-10

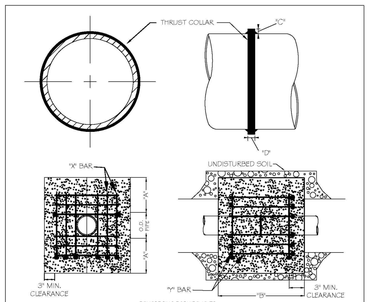

REINFORCING REQUIREMENTS

I.D. PIPE	REBAR SIZE	"X" BAR LENGTH	"X" BAR WEIGHT	"Y" BAR LENGTH	"Y" BAR WEIGHT	NO. REQUIRED
6" - 36"	#5	2'-2" = O.D. PIPE	1.043 LBS/FT	1'-1"	1.1 LBS. EACH	X-24, Y-12
48" & greater	#6	3'-0" = O.D. PIPE	1.502 LBS/FT	1'-3"	1.9 LBS. EACH	X-24, Y-12

THRUST COLLAR, AND THRUST SCHEDULE

I.D. PIPE	"A"	"B"	"C"	"D"
6" - 12"	1'-4"	1'-7"	2"	3/8"
20" - 24"	1'-6"	1'-7"	3"	1/2"
30" - 36"	1'-8"	1'-7"	4"	5/8"
48" & greater	1'-9"	1'-9"	6"	7/8"

NOTES:
1. SEE STANDARD DETAIL W-9 FOR THRUST BLOCK LOCATIONS.
2. CONCRETE SHALL BE 3000 PSI AND TRANSIT MIXED.
3. REINFORCING BARS SHALL BE DEFORMED AND TIED TOGETHER.
4. TRENCH BOTTOM WIDTH IN VICINITY OF THRUST BLOCK INSTALLATION SHALL BE THE MINIMUM WIDTH AS SHOWN ON STANDARD DETAIL W-3.
5. BACKFILL TAMPED IN 6" LIFTS PER STANDARD DETAIL W-3.
6. THRUST COLLAR MUST BE FACTORY WELDED ON BOTH SIDES ALONG BOTH EDGES OF COLLAR AROUND CIRCUMFERENCE.

CITY OF RALEIGH
DEPARTMENT OF PUBLIC UTILITIES
THRUST BLOCKING DESIGN DATA FOR WATER MAINS

DWG. NO.	REVISIONS	DATE	REVISIONS	DATE
W-7	KRH	2-1-00	J.F.S.	11-1-10
	D.H.L.	6-18-08		

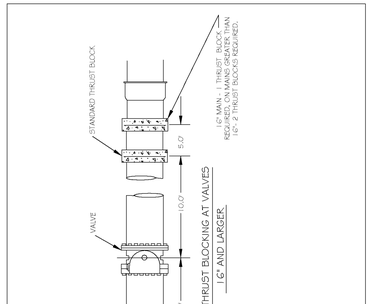

CITY OF RALEIGH
DEPARTMENT OF PUBLIC UTILITIES
STANDARD THRUST BLOCK INSTALLATION FOR 16" AND LARGER VALVES AND DEAD END MAINS

DWG. NO.	REVISIONS	DATE	REVISIONS	DATE
W-8	Y.C.A.	4-12-90	D.W.C.	9-7-99
	6-92	KRH	3-31-00	

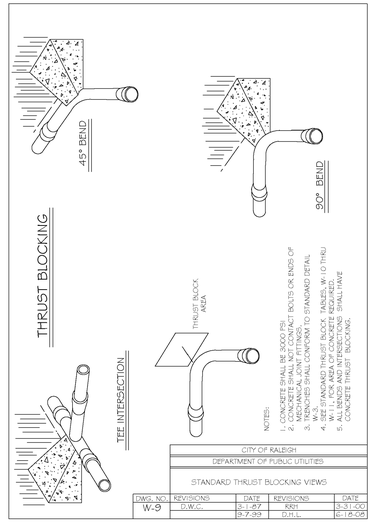

NOTES:
1. CONCRETE SHALL BE 3000 PSI.
2. DO NOT CONTACT BOLTS OR ENDS OF MECHANICAL JOINT FITTINGS.
3. TRENCHES SHALL CONFORM TO STANDARD DETAIL W-3.
4. SEE STANDARD THRUST BLOCK TABLES, W-10 THRU W-14 FOR AREA OF CONCRETE REQUIRED.
5. ALL BENDS AND INTERSECTIONS SHALL HAVE CONCRETE THRUST BLOCKING.

CITY OF RALEIGH
DEPARTMENT OF PUBLIC UTILITIES
STANDARD THRUST BLOCKING VIEWS

DWG. NO.	REVISIONS	DATE	REVISIONS	DATE
W-9	D.W.C.	9-7-99	KRH	3-31-00

REACTION BEARING AREAS FOR HORIZONTAL WATER PIPE BENDS
BASED ON TEST PRESSURE OF 200 P.S.I.
ALL AREAS GIVEN IN SQUARE FEET.

SIZE AND DEGREE OF BEND	STATIC THRUST IN POUNDS	MOISTENED DRY CLAY (COLD TEST)	ROCK, CONCRETE OR CLAY (COLD TEST)	SOFT CLAY (COLD TEST)	LOOSE SAND (COLD TEST)	SOFT CLAY (COLD TEST)	SAND (COMPACTED GRAVEL)	SOFT CLAY (COLD TEST)	SAND (COMPACT DRY) (COLD TEST)	SAND (COMPACT DRY) (COLD TEST)	SAND (COMPACT DRY) (COLD TEST)	SOFT CLAY (COLD TEST)	SAND (COMPACT DRY) (COLD TEST)	SAND (COMPACT DRY) (COLD TEST)	SAND (COMPACT DRY) (COLD TEST)	SOFT CLAY (COLD TEST)	SAND (COMPACT DRY) (COLD TEST)	SAND (COMPACT DRY) (COLD TEST)	SAND (COMPACT DRY) (COLD TEST)	SOFT CLAY (COLD TEST)	SAND (COMPACT DRY) (COLD TEST)	SAND (COMPACT DRY) (COLD TEST)	SOFT CLAY (COLD TEST)	SAND (COMPACT DRY) (COLD TEST)	SAND (COMPACT DRY) (COLD TEST)	SOFT CLAY (COLD TEST)	SAND (COMPACT DRY) (COLD TEST)	SAND (COMPACT DRY) (COLD TEST)	SOFT CLAY (COLD TEST)	SAND (COMPACT DRY) (COLD TEST)	SAND (COMPACT DRY) (COLD TEST)
6"																														
11 1/4°	1,108	1	1	1	1	1	1	1	2	1																				
22 1/2°	2,207	1	2	2	1	1	1	1	3	1																				
45°	4,328	2	3	3	1	1	1	2	5	1																				
90°	7,996	2	4	5	1	1	2	2	8	1																				
PLUG	5,655	2	3	4	1	1	2	2	6	1																				
8"																														
11 1/4°	1,970	1	1	2	1	1	1	1	2	1																				
22 1/2°	3,922	1	2	3	1	1	1	1	4	1																				
45°	7,694	2	4	5	1	1	1	2	8	1																				
90°	14,215	4	8	9	2	2	2	4	15	2																				
PLUG	10,053	3	5	6	2	2	2	3	10	1																				
12"																														
11 1/4°	4,433	2	3	3	1	1	1	2	5	1																				
22 1/2°	8,826	3	5	6	2	2	2	3	9	1																				
45°	17,312	5	9	11	3	3	3	5	18	2																				
90°	31,983	8	16	19	4	4	4	8	32	4																				
PLUG	22,619	6	12	14	3	3	3	6	23	3																				
16"																														
11 1/4°	7,881	2	4	5	1	1	1	2	8	1																				
22 1/2°	15,651	4	8	10	2	2	2	4	16	2																				
45°	30,773	8	16	19	4	4	4	8	31	4																				
90°	56,861	15	29	35	8	8	8	15	57	6																				
PLUG	40,213	10	21	25	5	5	5	10	41	5																				

REACTION BEARING AREAS ARE IN SQUARE FEET MEASURED IN A VERTICAL PLANE IN THE TRENCH SIDE AT AN ANGLE OF 90° TO THE THRUST VECTOR.

USE 0° - 90° BEND VALUE FOR HYDRANTS FOR ADDITIONAL SAFETY FACTOR.

CITY OF RALEIGH
DEPARTMENT OF PUBLIC UTILITIES
THRUST BLOCKING DESIGN QUANTITY TABLE

DWG. NO.	REVISIONS	DATE	REVISIONS	DATE
W-10	D.W.C.	6-23-99		

REACTION BEARING AREAS FOR HORIZONTAL WATER PIPE BENDS
BASED ON TEST PRESSURE OF 200 P.S.I.
ALL AREAS GIVEN IN SQUARE FEET.

SIZE AND DEGREE OF BEND	STATIC THRUST IN POUNDS	MOISTENED DRY CLAY (COLD TEST)	SOFT CLAY (COLD TEST)	LOOSE SAND (COLD TEST)	SOFT CLAY (COLD TEST)	SAND (COMPACTED GRAVEL)	SAND (COMPACT DRY) (COLD TEST)	SAND (COMPACT DRY) (COLD TEST)	SAND (COMPACT DRY) (COLD TEST)	SOFT CLAY (COLD TEST)	SAND (COMPACT DRY) (COLD TEST)	SAND (COMPACT DRY) (COLD TEST)	SOFT CLAY (COLD TEST)	SAND (COMPACT DRY) (COLD TEST)	ROCK, CONCRETE (COLD TEST)
24"															
11 1/4°	17,734	5	9	11	3	3	5	18	2						
22 1/2°	35,305	9	18	22	5	5	9	36	4						
45°	69,252	18	35	42	9	9	18	70	7						
90°	127,936	32	64	77	16	16	32	128	13						
PLUG	90,478	23	46	55	12	12	23	91	10						
30"															
11 1/4°	27,709	7	14	17	4	4	7	2	3						
22 1/2°	55,163	14	28	34	7	7	14	56	6						
45°	108,204	28	55	65	14	14	28	109	11						
90°	199,900	50	100	120	25	25	50	200	20						
PLUG	141,372	36	71	85	18	18	36	142	15						
36"															
11 1/4°	39,901	10	20	24	5	5	10	40	4						
22 1/2°	79,439	20	40	48	10	10	20	30	8						
45°	155,816	39	78	94	20	20	39	156	16						
90°	287,855	72	144	172	36	36	72	288	29						
PLUG	203,575	51	102	122	26	26	51	204	21						
48"															
11 1/4°	70,935	18	36	43	9	9	18	71	8						
22 1/2°	141,218	36	71	85	18	18	36	142	15						
45°	277,007	70	139	166	35	35	70	277	28						
90°	511,742	128	256	320	64	64	128	512	52						
PLUG	361,911	91	181	217	46	46	91	362	37						

REACTION BEARING AREAS ARE IN SQUARE FEET MEASURED IN A VERTICAL PLANE IN THE TRENCH SIDE AT AN ANGLE OF 90° TO THE THRUST VECTOR.

USE 0° - 90° BEND VALUE FOR HYDRANTS FOR ADDITIONAL SAFETY FACTOR.

CITY OF RALEIGH
DEPARTMENT OF PUBLIC UTILITIES
THRUST BLOCKING DESIGN QUANTITY TABLE

DWG. NO.	REVISIONS	DATE	REVISIONS	DATE
W-11	D.W.C.	6-23-99		

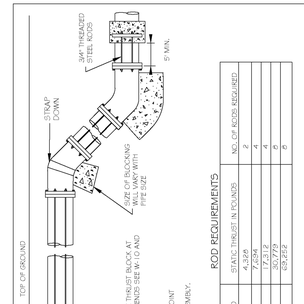

ROD REQUIREMENTS

SIZE OF 45° BEND	NO. OF RODS REQUIRED
	STATIC THRUST IN POUNDS
	4,328
6"	2
8"	7,694
12"	4
16"	17,312
24"	4
	30,773
	6
	69,252

GENERAL NOTES:
1. ALL THREADED RODS BOLTS SHALL BE 3/4" HOT DIPPED GALVANIZED.
2. CONCRETE SHALL NOT CONTACT BOLTS OR ENDS OF MECHANICAL JOINT BENDS.
3. CONCRETE SHALL BE 3000 PSI AND TRANSIT MIXED.
4. MEET USE DUCTILE IRON, DIE BOLTS WHERE NECESSARY.
5. 3' MINIMUM COVER MUST BE MAINTAINED ON ALL WATER MAINS.

CITY OF RALEIGH
DEPARTMENT OF PUBLIC UTILITIES
STANDARD VERTICAL BEND

DWG. NO.	REVISIONS	DATE	REVISIONS	DATE
W-12	ABS	4-6-04	J.F.S.	11-1-10
	D.H.L.	6-18-08		

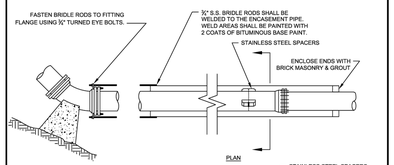

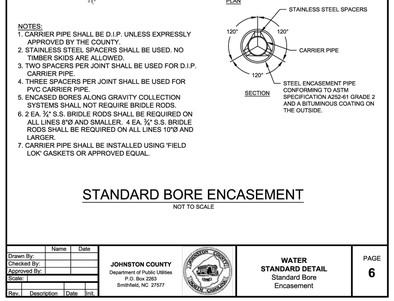

NOTES:
1. CARRIER PIPE SHALL BE D.I.P. UNLESS EXPRESSLY APPROVED BY THE COUNTY.
2. STAINLESS STEEL SPACERS SHALL BE USED. NO TIMBER SKIDS ARE ALLOWED.
3. TWO SPACERS PER JOINT SHALL BE USED FOR D.I.P. CARRIER PIPE.
4. THREE SPACERS PER JOINT SHALL BE USED FOR PVC CARRIER PIPE.
5. ENCASED BORES ALONG GRAVITY COLLECTION SYSTEMS SHALL NOT REQUIRE BRIDLE RODS.
6. 2 EA. ¾" S.S. BRIDLE RODS SHALL BE REQUIRED ON ALL LINES 8"Ø AND SMALLER. 4 EA. ¾" S.S. BRIDLE RODS SHALL BE REQUIRED ON ALL LINES 10"Ø AND LARGER.
7. CARRIER PIPE SHALL BE INSTALLED USING 'FIELD LOK' GASKETS OR APPROVED EQUAL.

STANDARD BORE ENCASEMENT
NOT TO SCALE

	Name	Date
Drawn By:		
Checked By:		
Approved By:		
Scale:		

Rev.	Description	Date	Init.

JOHNSTON COUNTY
Department of Public Utilities
P.O. Box 2063
Smithfield, NC 27577

WATER STANDARD DETAIL
Standard Bore Encasement

PAGE 6

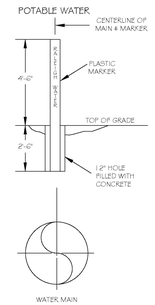

NOTES:
1. POTABLE WATER MARKER TO BE BLUE IN COLOR.
2. POTABLE WATER MARKER TO BE LABELED "RALEIGH WATER".
3. TO BE SPACED ALONG CENTERLINE OF MAIN EVERY 300 FEET.
4. MARKERS TO BE ROUND AND 4" IN DIAMETER.

CITY OF RALEIGH
DEPARTMENT OF PUBLIC UTILITIES
STANDARD MAIN & VALVE MARKERS FOR POTABLE & REUSE WATER IN EASEMENTS

DWG. NO.	REVISIONS	DATE	REVISIONS	DATE
W-13	D.W.C.	9-7-99	DHL	6-16-07
	KRH	3-31-00	J.F.S.	11-1-10

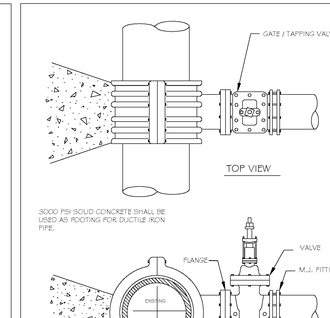

NOTES:
1. CONCRETE SHALL NOT CONTACT BOLTS OR ENDS OF MECHANICAL JOINT FITTINGS.
2. SEE STANDARD REACTION BLOCK TABLES, W-10 AND W-11 FOR AREA OF CONCRETE REQUIRED.

CITY OF RALEIGH
DEPARTMENT OF PUBLIC UTILITIES
4" - 24" STANDARD TAPPING SLEEVE AND VALVE ASSEMBLY

DWG. NO.	REVISIONS	DATE	REVISIONS	DATE
W-14	Y.C.A.	2-31-91	KRH	3-31-00
	D.W.C.	9-7-99	J.F.S.	11-1-10

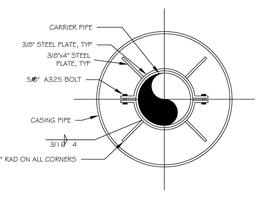

NOTE:
1) USE A MINIMUM OF TWO SPIDERS PER PIPE JOINT ONE FOURTH OF THE PIPE JOINT LENGTH IN FROM BOTH THE BELL AND SPIGOT ENDS.

CITY OF RALEIGH
DEPARTMENT OF PUBLIC UTILITIES
PIPE ALIGNMENT GUIDE

DWG. NO.	REVISIONS	DATE	REVISIONS	DATE
W-40	KRH	3-31-00		
	A.B.B.	4-16-04		

CITY OF RALEIGH - PLANS AUTHORIZED FOR CONSTRUCTION

Electronic Approval: This approval is being issued electronically. This approval is valid only upon the signature of a City of Raleigh Review Officer below. The City will retain a copy of the approved plans. Any work authorized by this approval must proceed in accordance with the plans kept on file with the City. This electronic approval may not be edited once issued. Any modification to this approval once issued will invalidate this approval.

City of Raleigh Development Approval _____

Raleigh Water Review Officer

NORTH CAROLINA PROFESSIONAL SEAL 036908 ENGINEER MARTY D. BIZELL

09/01/23

BASS, NIXON & KENNEDY, INC.
CONSULTING ENGINEERS
6310 CHAPEL HILL ROAD, SUITE 250, RALEIGH, NC 27607
TELEPHONE: (919)851-4422 FAX: (919)851-8968
CERTIFICATION NUMBERS: NCBELS (C-0110); NCBOLA (C-0267)

NO.	DATE	DESCRIPTION	BY
		REVISIONS	

03-19157 PROGRESS MRM
JOB NO. DATE DRAWN BY

DETAILS

SCALE: N.T.S. CHK BY: MDB

COBBLESTONE VILLAGE
MIXED USE DEVELOPMENT
TOWN OF ROLESVILLE, WAKE COUNTY, NORTH CAROLINA

SHEET C5.4

TOWN OF ROLESVILLE PROJECT NO.

NOT RELEASED FOR CONSTRUCTION OR BID SOLICITATION

©2019 BASS, NIXON & KENNEDY, INC. EXPRESSLY RESERVES ITS COMMON LAW COPYRIGHT AND OTHER PROPERTY RIGHTS IN THESE PLANS. THESE PLANS ARE NOT TO BE REPRODUCED, CHANGED OR COPIED IN ANY FORM OR MANNER WHATSOEVER, NOR ARE THEY TO BE ASSIGNED TO ANY THIRD PARTY WITHOUT FIRST OBTAINING THE EXPRESSED WRITTEN PERMISSION AND CONSENT OF BASS, NIXON & KENNEDY, INC.

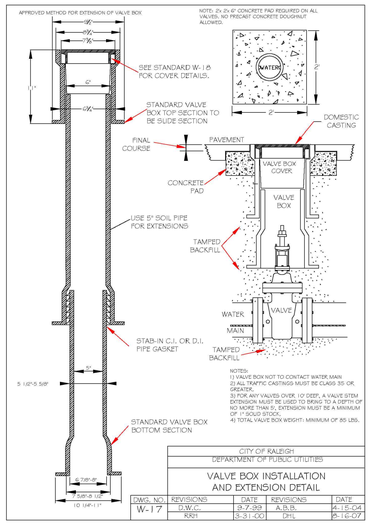

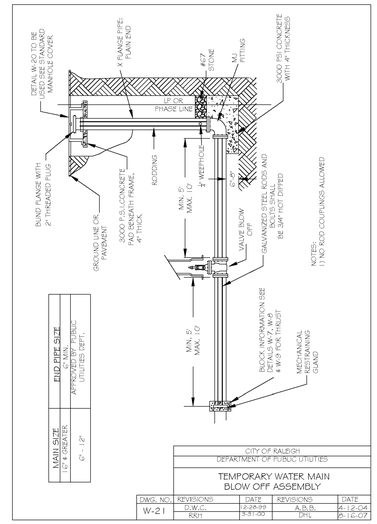

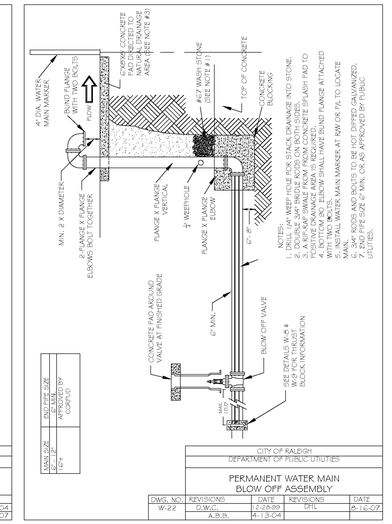

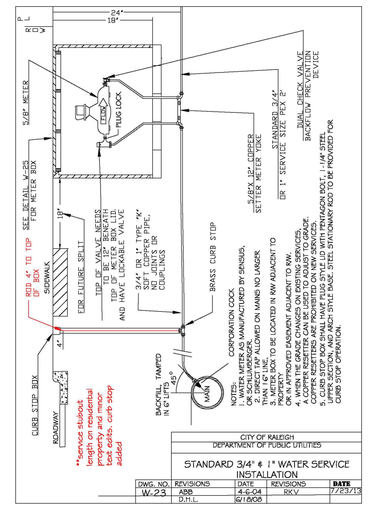

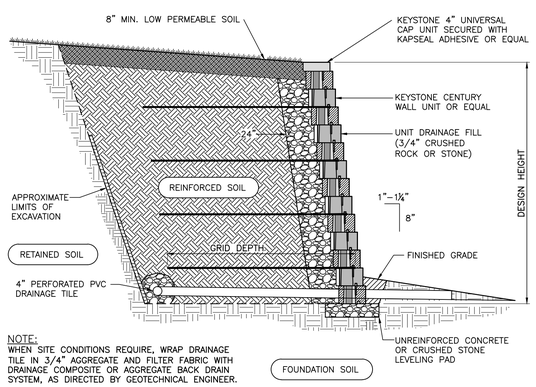

TYPICAL BLOCK WALL SECTION

CENTURY WALL UNIT – 1" SETBACK

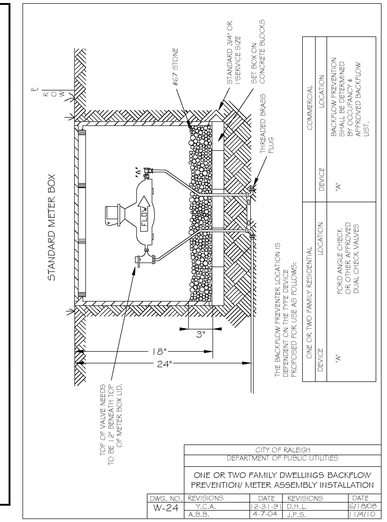

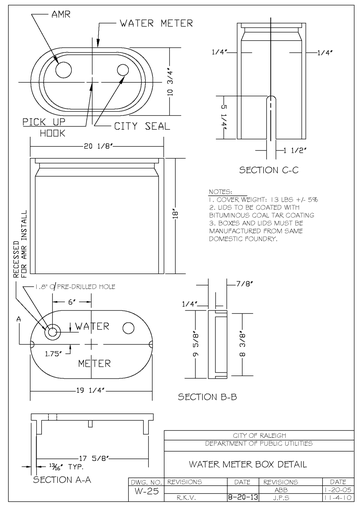

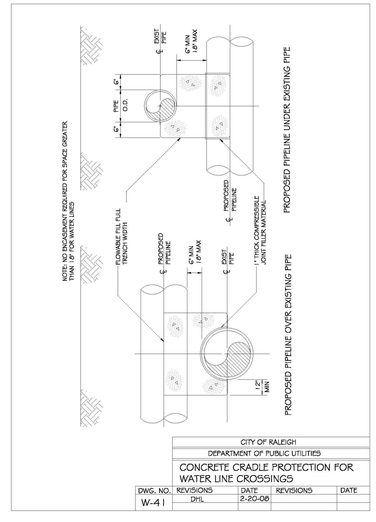

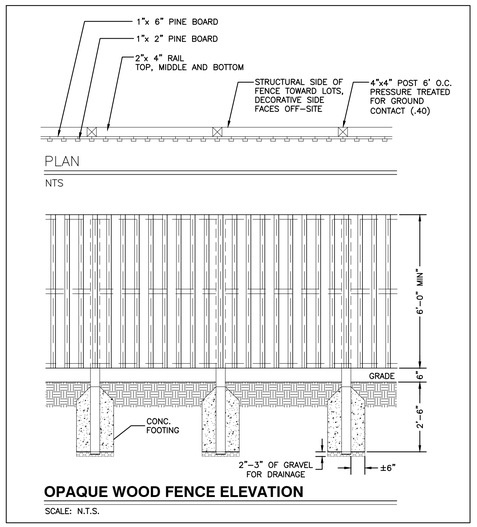

OPAQUE WOOD FENCE ELEVATION

SCALE: N.T.S.

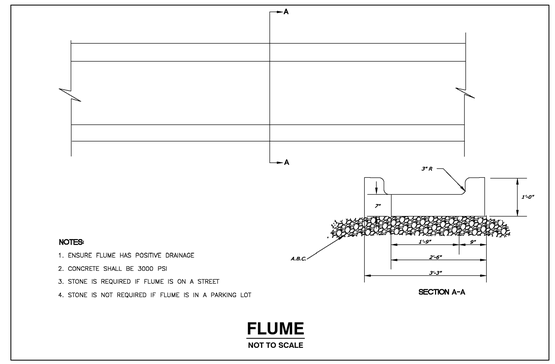

FLUME

NOT TO SCALE

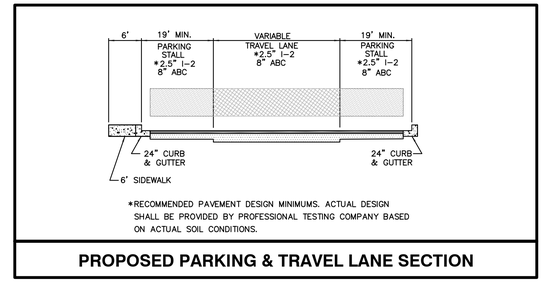

PROPOSED PARKING & TRAVEL LANE SECTION

CITY OF RALEIGH - PLANS AUTHORIZED FOR CONSTRUCTION

Electronic Approval: This approval is being issued electronically. This approval is valid only upon the signature of a City of Raleigh Review Officer below. The City will retain a copy of the approved plans. Any work authorized by this approval must proceed in accordance with the plans kept on file with the City. This electronic approval may not be edited once issued. Any modification to this approval once issued will invalidate this approval.

City of Raleigh Development Approval _____

Raleigh Water Review Officer

NORTH CAROLINA PROFESSIONAL SEAL 036908 ENGINEER MARTY D. BIZZELL

09/01/23

BASS, NIXON & KENNEDY, INC.
CONSULTING ENGINEERS
6310 CHAPEL HILL ROAD, SUITE 250, RALEIGH, NC 27607
TELEPHONE: (919)851-4422 FAX: (919)851-8968
CERTIFICATION NUMBERS: NCBELS (C-0110); NCBOLA (C-0267)

NO.	DATE	DESCRIPTION	BY
		REVISIONS	

03-19157 PROGRESS MRM
JOB NO. DATE DRAWN BY

DETAILS

SCALE: N.T.S. CHK BY: MDB

COBBLESTONE VILLAGE
MIXED USE DEVELOPMENT
TOWN OF ROLESVILLE, WAKE COUNTY, NORTH CAROLINA

SHEET C5.5

NOT RELEASED FOR CONSTRUCTION OR BID SOLICITATION

TOWN OF ROLESVILLE PROJECT NO.

©2019 BASS, NIXON & KENNEDY, INC. EXPRESSLY RESERVES ITS COMMON LAW COPYRIGHT AND OTHER PROPERTY RIGHTS IN THESE PLANS. THESE PLANS ARE NOT TO BE REPRODUCED, CHANGED OR COPIED IN ANY FORM OR MANNER WHATSOEVER, NOR ARE THEY TO BE ASSIGNED TO ANY THIRD PARTY WITHOUT FIRST OBTAINING THE EXPRESSED WRITTEN PERMISSION AND CONSENT OF BASS, NIXON & KENNEDY, INC.

ROADWAY STANDARD DRAWING FOR METHOD OF PIPE INSTALLATION – FLEXIBLE PIPE (300.01, SHEET 1 OF 3)

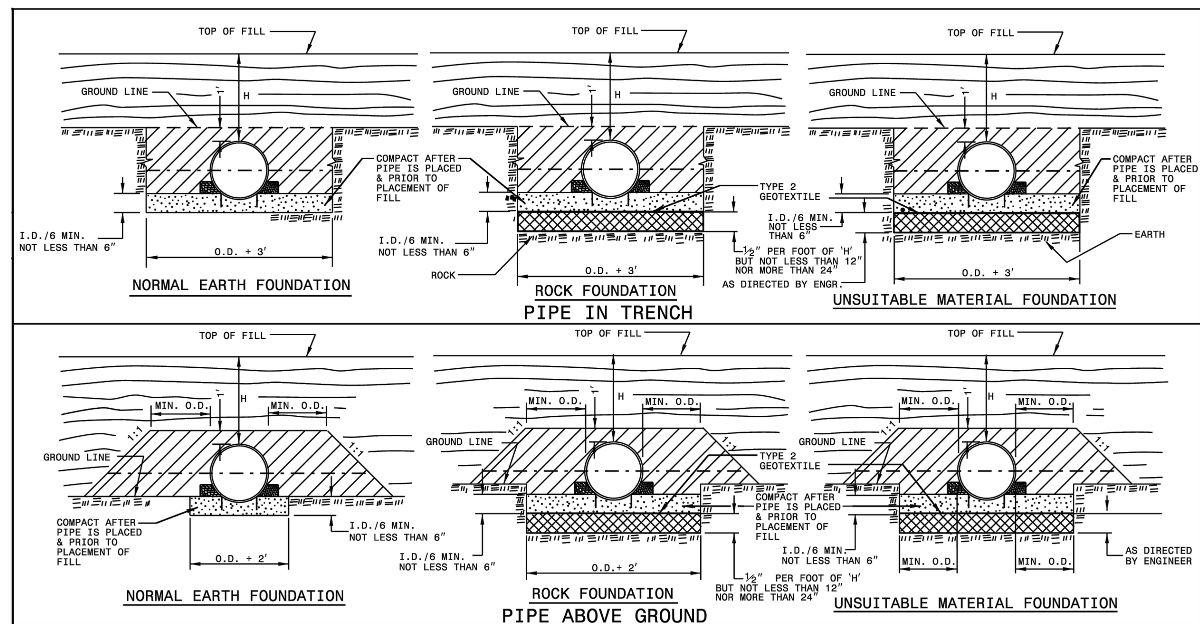

GENERAL NOTES:

I.D. = THE MAXIMUM HORIZONTAL INSIDE DIAMETER DIMENSION.

O.D. = THE MAXIMUM HORIZONTAL OUTSIDE DIAMETER DIMENSION.

H = THE FILL HEIGHT MEASURED VERTICALLY AT ANY POINT ALONG THE PIPE FROM THE TOP OF THE PIPE TO THE TOP OF THE EMBANKMENT AT THAT POINT.

TAKE CARE TO FULLY COMPACT HAUNCH ZONE OF PIPE BACKFILL.

LOOSELY PLACED SELECT MATERIAL CLASS III OR CLASS II, TYPE 1 FOR PIPE BEDDING. LEAVE SECTION DIRECTLY BENEATH PIPE UNCOMPACTED AS PIPE SEATING AND BACKFILL WILL ACCOMPLISH COMPACTION.

DO NOT OPERATE HEAVY EQUIPMENT OVER ANY PIPE CULVERT UNTIL THE PIPE CULVERT HAS BEEN PROPERLY BACKFILLED AND COVERED WITH AT LEAST 3 FEET OF APPROVED MATERIAL.

SPRINGLINE OF PIPE

SELECT BACKFILL MATERIAL CLASS III OR CLASS II, TYPE 1 ABOVE AND BELOW SPRINGLINE.

APPROVED SUITABLE LOCAL MATERIAL.

UNDISTURBED EARTH MATERIAL

SELECT MATERIAL CLASS V OR VI FOR FOUNDATION CONDITIONING. ENCAPSULATE WITH TYPE 2 GEOTEXTILE AS DIRECTED BY THE ENGINEER.

STATE OF NORTH CAROLINA DEPT. OF TRANSPORTATION DIVISION OF HIGHWAYS RALEIGH, N.C. 1-18

SHEET 1 OF 3 300.01

ROADWAY STANDARD DRAWING FOR METHOD OF PIPE INSTALLATION – RIGID PIPE (300.01, SHEET 2 OF 3)

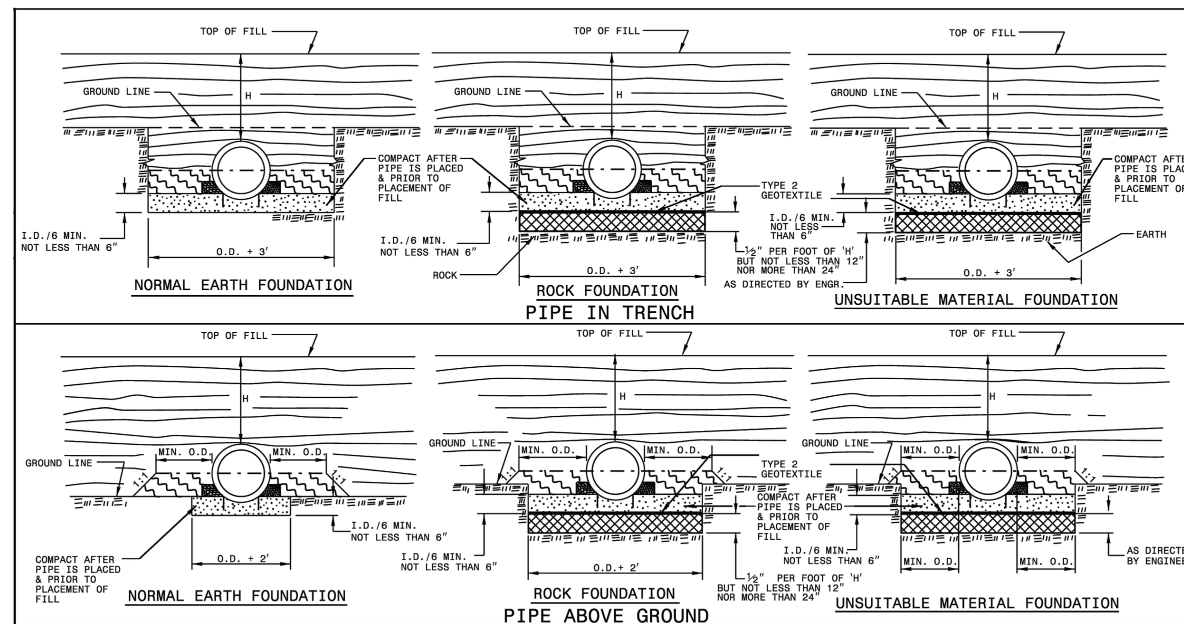

GENERAL NOTES:

I.D. = THE MAXIMUM HORIZONTAL INSIDE DIAMETER DIMENSION.

O.D. = THE MAXIMUM HORIZONTAL OUTSIDE DIAMETER DIMENSION.

H = THE FILL HEIGHT MEASURED VERTICALLY AT ANY POINT ALONG THE PIPE FROM THE TOP OF THE PIPE TO THE TOP OF THE EMBANKMENT AT THAT POINT.

TAKE CARE TO FULLY COMPACT HAUNCH ZONE OF PIPE BACKFILL.

LOOSELY PLACED SELECT MATERIAL CLASS III OR CLASS II, TYPE 1 FOR PIPE BEDDING. LEAVE SECTION DIRECTLY BENEATH PIPE UNCOMPACTED AS PIPE SEATING AND BACKFILL WILL ACCOMPLISH COMPACTION.

DO NOT OPERATE HEAVY EQUIPMENT OVER ANY PIPE CULVERT UNTIL THE PIPE CULVERT HAS BEEN PROPERLY BACKFILLED AND COVERED WITH AT LEAST 3 FEET OF APPROVED MATERIAL.

SPRINGLINE OF PIPE

SELECT BACKFILL MATERIAL CLASS III OR CLASS II, BELOW SPRINGLINE.

APPROVED SUITABLE LOCAL MATERIAL ABOVE SPRINGLINE.

UNDISTURBED EARTH MATERIAL

SELECT MATERIAL CLASS V OR VI FOR FOUNDATION CONDITIONING. ENCAPSULATE WITH TYPE 2 GEOTEXTILE AS DIRECTED BY THE ENGINEER.

STATE OF NORTH CAROLINA DEPT. OF TRANSPORTATION DIVISION OF HIGHWAYS RALEIGH, N.C. 1-18

SHEET 2 OF 3 300.01

ROADWAY STANDARD DRAWING FOR METHOD OF PIPE INSTALLATION – FILL HEIGHT TABLES (300.01, SHEET 3 OF 3)

FLEXIBLE PIPE

Round Corrugated Steel Pipe
2 2/3 x ½ corrugation **

Diameter (inches)	Minimum cover (inches)	Maximum Height of Cover (feet) (Ga) 16	14	12	10	8
12	12	204	256			
15	12	162	204			
18	12	135	169	239		
21	12	115	145	204		
24	12	100	126	178		
30	12	79	100	142		
36	12	65	83	117	152	
42	12	55	70	100	130	160
48	12	48	61	87	113	139
54	12		54	77	100	123
60	12			69	90	111
66	12				81	100
72	12				74	91
78	12					81
84	12					69

Round Corrugated Aluminum Pipe
2 2/3 x ½ corrugation **

Diameter (inches)	Minimum cover (inches)	Maximum Height of Cover (feet) (Ga) 16	14	12	10	8
12	12	123	155	218	281	344
15	12	98	123	174	224	275
18	12	81	102	144	187	228
21	12	69	87	123	160	195
24	12	60	76	108	139	171
27	12		67	95	123	151
30	12		60	85	111	136
36	12		50	71	92	113
42	12			60	78	96
48	12			52	68	84
54	12			46	50	74
60	12				50	62
66	12					51
72	12					41

** FOR DIFFERENT CORRUGATIONS AND ARCH PIPES REFER TO ROADWAY DESIGN MANUAL OR MANUFACTURERS SPECIFICATION.

REFER TO THE FOLLOWING FOR PIPE SPECIFICATIONS

CSP - AASHTO M36
CAAP - AASHTO M196
HDPE - AASHTO M294
PVC - ASTM F949 or AASHTO M304

HDPE - * (Minimum fill) 2' for pipe diameters ≥ 12" and ≤ 60"
* (Maximum fill) 20' for pipe diameters ≤ 24"
17' for pipe diameters ≥ 30" and ≤ 60"

PVC - * (Minimum fill) 2' for pipe diameters ≥ 12" and ≤ 36"
* (Maximum fill) 30' for pipe diameters ≥ 12" and ≤ 36"

* FILL HEIGHT IS MEASURED FROM THE TOP OF THE PIPE TO THE BOTTOM OF THE PAVEMENT STRUCTURE

NOTES: FILL HEIGHTS SHOWN WERE CALCULATED USING AASHTO LRFD BRIDGE DESIGN SPECIFICATIONS

1' MINIMUM COVER FOR ALL SIDE DRAIN PIPE IN ACCORDANCE WITH THE STANDARD SPECIFICATIONS

RIGID PIPE

RCP - * (Minimum fill) 1' for Class IV & CLASS V
2' for Class III & Class II

* (Maximum fill) 10' - Class II pipe
20' - Class III pipe
30' - Class IV pipe
40' - Class V pipe

(For fills > 40' & < 80' use LRFD Direct Design Method)

* FILL HEIGHT IS MEASURED FROM THE TOP OF THE PIPE TO THE BOTTOM OF THE PAVEMENT STRUCTURE

REFER TO THE FOLLOWING FOR PIPE SPECIFICATIONS

RCP - AASHTO M170

NOTES: FILL HEIGHTS SHOWN WERE CALCULATED USING AASHTO LRFD BRIDGE DESIGN SPECIFICATIONS

1' MINIMUM COVER FOR ALL SIDE DRAIN PIPE IN ACCORDANCE WITH THE STANDARD SPECIFICATIONS

STATE OF NORTH CAROLINA DEPT. OF TRANSPORTATION DIVISION OF HIGHWAYS RALEIGH, N.C. 1-18

SHEET 3 OF 3 300.01

ROADWAY STANDARD DRAWING FOR CONCRETE CURB, GUTTER AND CURB & GUTTER (846.01, SHEET 1 OF 3)

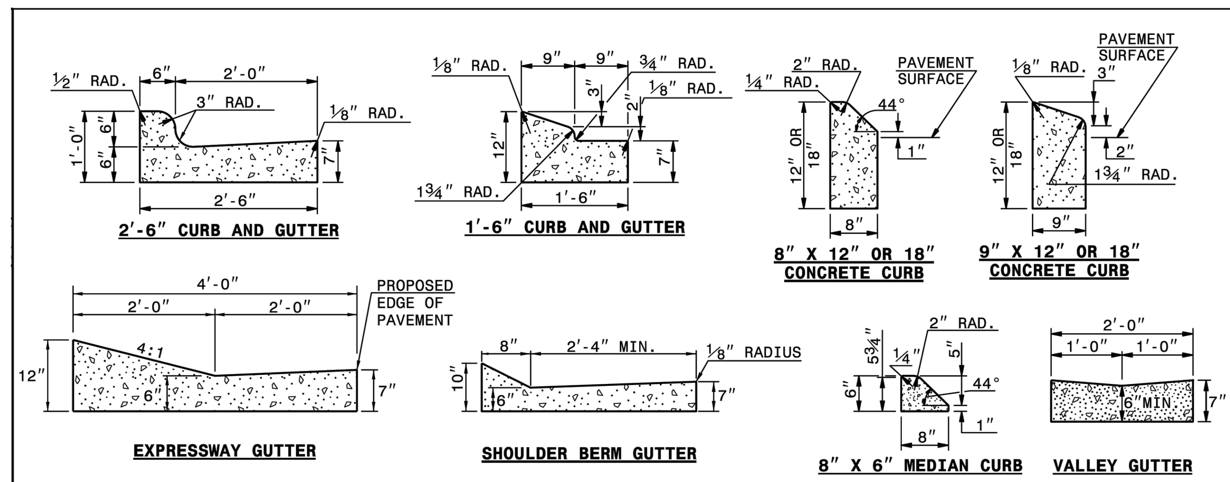

SECTION VIEW OF CURBS OR CURBS AND GUTTERS

GENERAL NOTES:
- PLACE CONTRACTION JOINTS AT 10' INTERVALS, EXCEPT THAT A 15' SPACING MAY BE USED WHEN A MACHINE IS USED OR WHEN SATISFACTORY SUPPORT FOR THE FACE FORM CAN BE OBTAINED WITHOUT THE USE OF TEMPLATES AT 10' INTERVALS.
- JOINT SPACING MAY BE ALTERED IF REQUIRED BY THE ENGINEER.
- CONTRACTION JOINTS MAY BE INSTALLED WITH THE USE OF TEMPLATES OR FORMED BY OTHER APPROVED METHODS. CONSTRUCT NON-TEMPLATE FORMED JOINTS A MIN. OF 1½" DEEP.
- FILL ALL CONSTRUCTION JOINTS, EXCEPT IN 8"x6" MEDIAN CURB, WITH JOINT FILLER AND SEALER.
- SPACE EXPANSION JOINTS AT 90' INTERVALS AND ADJACENT TO ALL RIGID OBJECTS.

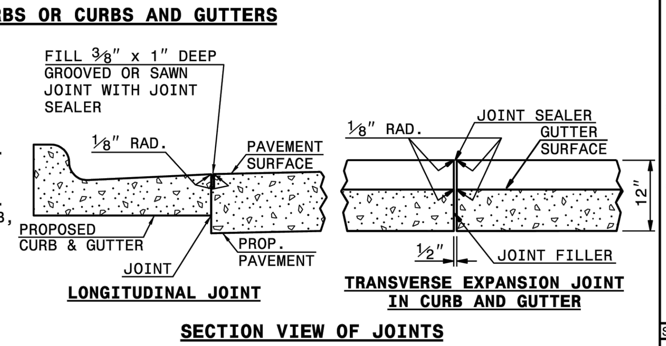

SECTION VIEW OF JOINTS

STATE OF NORTH CAROLINA DEPT. OF TRANSPORTATION DIVISION OF HIGHWAYS RALEIGH, N.C. 1-18

SHEET 1 OF 3 846.01

ROADWAY STANDARD DRAWING FOR CONCRETE CURB, GUTTER AND CURB & GUTTER (846.01, SHEET 2 OF 3)

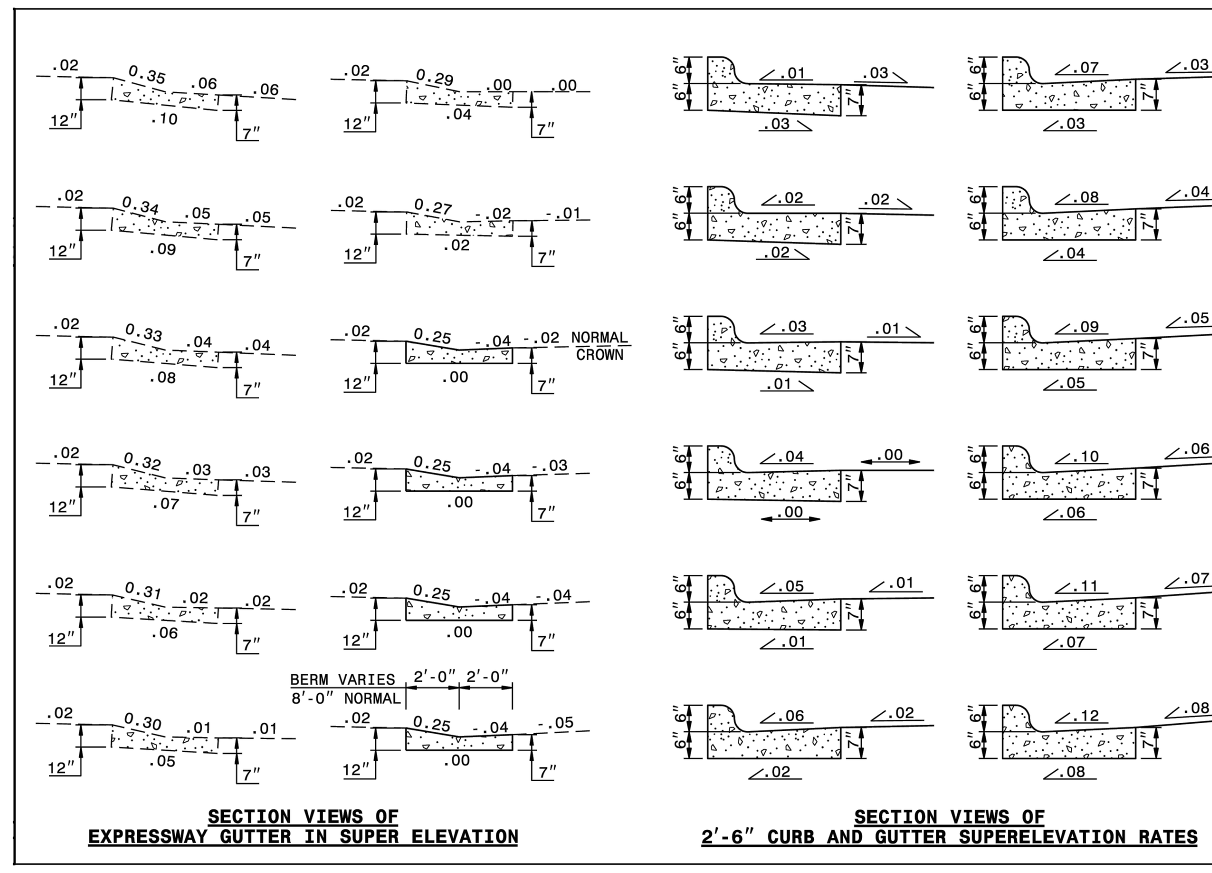

STATE OF NORTH CAROLINA DEPT. OF TRANSPORTATION DIVISION OF HIGHWAYS RALEIGH, N.C. 1-18

SHEET 2 OF 3 846.01

ROADWAY STANDARD DRAWING FOR CONCRETE CURB, GUTTER AND CURB & GUTTER (846.01, SHEET 3 OF 3)

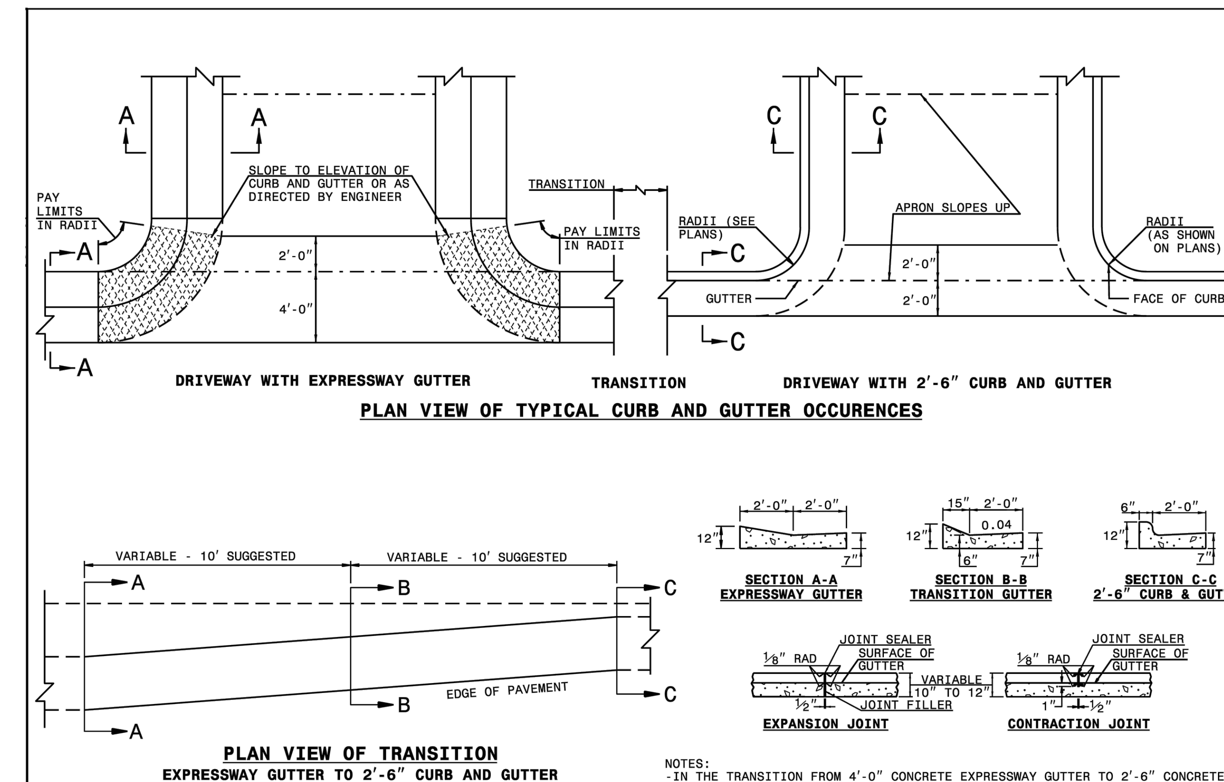

NOTES:
- IN THE TRANSITION FROM 4'-0" CONCRETE EXPRESSWAY GUTTER TO 2'-6" CONCRETE CURB AND GUTTER, PLACE ½" EXPANSION JOINTS AT 25' INTERVALS.
- PLACE GROOVE JOINTS 1" DEEP AT 12'-6" INTERVALS BETWEEN EXPANSION JOINTS.
- FILL AND SEAL THE TOP ½" OF THE EXPANSION JOINTS AND 1" OF CONTRACTION JOINTS WITH APPROVED JOINT SEALING COMPOUND.

STATE OF NORTH CAROLINA DEPT. OF TRANSPORTATION DIVISION OF HIGHWAYS RALEIGH, N.C. 1-18

SHEET 3 OF 3 846.01

ROADWAY STANDARD DRAWING FOR CONCRETE SIDEWALK (848.01, SHEET 1 OF 1)

NOTES:

CONSTRUCT STANDARD SIDEWALK 5' WIDE AND 4" THICK UNLESS OTHERWISE DENOTED ON PLANS.

PLACE A GROOVE JOINT 1" DEEP WITH ⅛" RADII IN THE CONCRETE SIDEWALK AT 5' INTERVALS. ONE ½" EXPANSION JOINT WILL BE REQUIRED AT 50' INTERVALS. A ½" EXPANSION JOINT WILL BE REQUIRED WHERE THE SIDEWALK JOINS ANY RIGID STRUCTURE.

SEE STD. DWG. 848.05 FOR CURB RAMP LOCATION REQUIREMENTS AND CONSTRUCTION GUIDELINES.

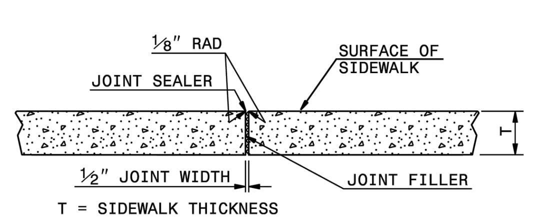

TRANSVERSE EXPANSION JOINT IN SIDEWALK

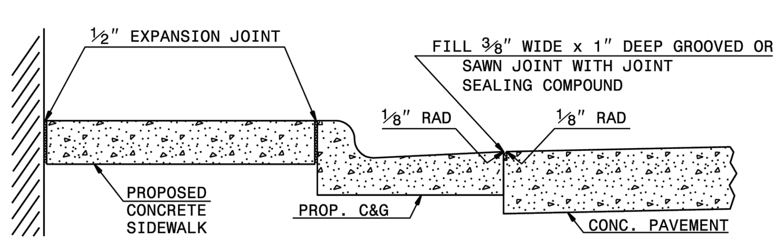

DETAILS SHOWING JOINTS IN CONCRETE SIDEWALK

STATE OF NORTH CAROLINA DEPT. OF TRANSPORTATION DIVISION OF HIGHWAYS RALEIGH, N.C. 1-18

SHEET 1 OF 1 848.01

ROADWAY STANDARD DRAWING FOR CURB RAMP – PROPOSED CURB AND GUTTER (848.05, SHEET 1 OF 3)

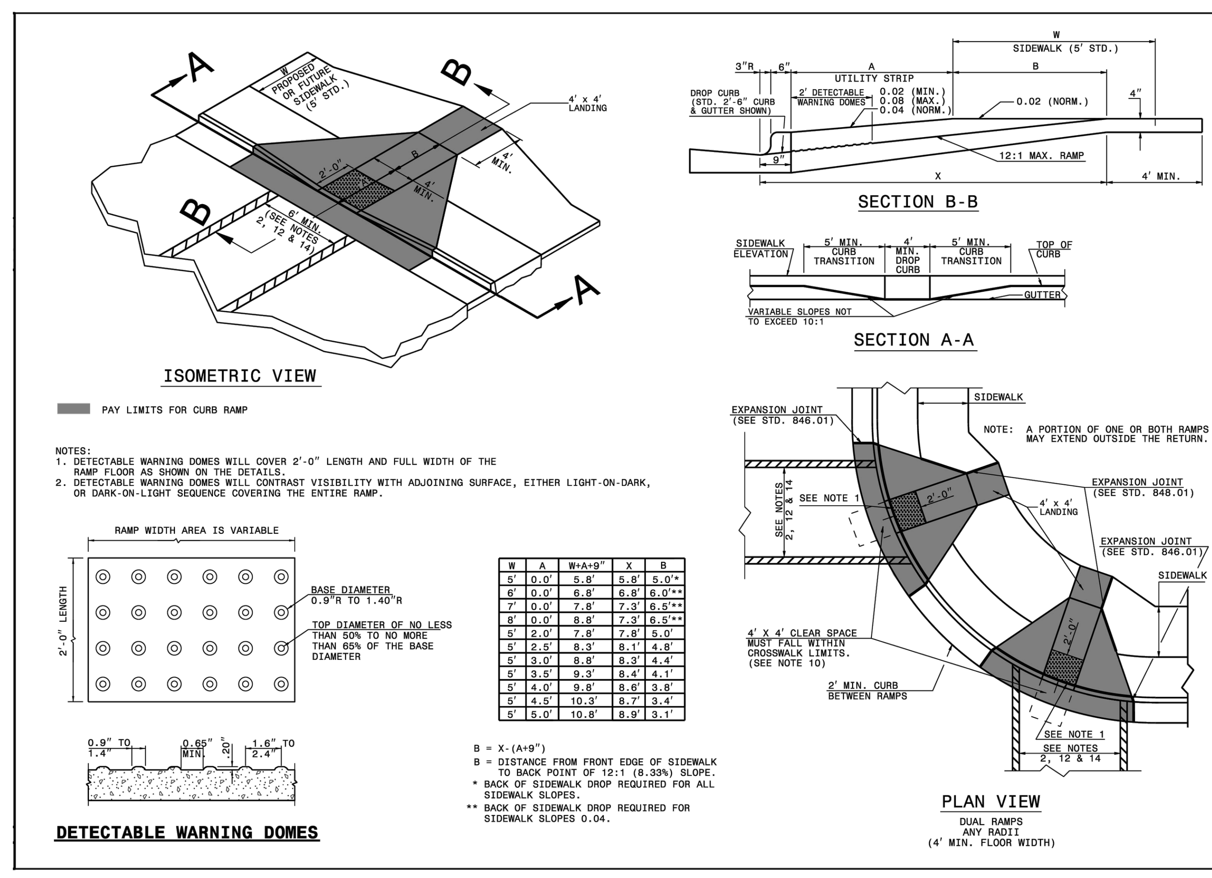

NOTES:
1. DETECTABLE WARNING DOMES WILL COVER 2'-0" LENGTH AND FULL WIDTH OF THE RAMP FLOOR AS SHOWN ON THE DETAILS.
2. DETECTABLE WARNING DOMES WILL CONTRAST VISIBILITY WITH ADJOINING SURFACE, EITHER LIGHT-ON-DARK, OR DARK-ON-LIGHT SEQUENCE COVERING THE ENTIRE RAMP.

W	A	W+A+9"	X	B
5'	0.0'	5.8'	5.8'	5.0'*
6'	0.0'	6.8'	6.8'	6.0'**
7'	0.0'	7.8'	7.3'	6.5'**
8'	0.0'	8.8'	7.3'	6.5'**
5'	2.0'	7.8'	7.8'	5.0'
5'	2.5'	8.3'	8.1'	4.8'
5'	3.0'	8.8'	8.3'	4.4'
5'	3.5'	9.3'	8.4'	4.1'
5'	4.0'	9.8'	8.6'	3.8'
5'	4.5'	10.3'	8.7'	3.4'
5'	5.0'	10.8'	8.9'	3.1'

B = X-(A+9")
B = DISTANCE FROM FRONT EDGE OF SIDEWALK TO BACK POINT OF 12:1 (8.33%) SLOPE.
* BACK OF SIDEWALK DROP REQUIRED FOR ALL SIDEWALK SLOPES.
** BACK OF SIDEWALK DROP REQUIRED FOR SIDEWALK SLOPES 0.04.

STATE OF NORTH CAROLINA DEPT. OF TRANSPORTATION DIVISION OF HIGHWAYS RALEIGH, N.C. 1-18

SHEET 1 OF 3 848.05

ROADWAY STANDARD DRAWING FOR CURB RAMP – PROPOSED CURB AND GUTTER (848.05, SHEET 2 OF 3)

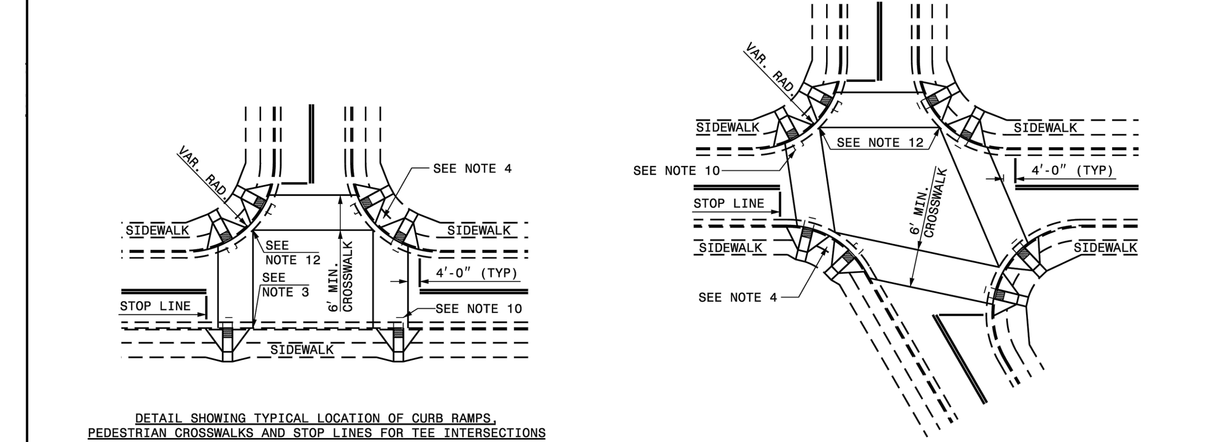

ROADWAY PLAN SYMBOL (CR) FOR PROPOSED CURB RAMP

PROPOSED CURB RAMP W/ LANDING
PROPOSED OR FUTURE SIDEWALK

ALLOWABLE LOCATIONS
DUAL RAMP RADII...........ANY

STATE OF NORTH CAROLINA DEPT. OF TRANSPORTATION DIVISION OF HIGHWAYS RALEIGH, N.C. 1-18

SHEET 2 OF 3 848.05

ROADWAY STANDARD DRAWING FOR CURB RAMPS – NOTES (848.05, SHEET 3 OF 3)

NOTES:
1. CONSTRUCT THE RAMP SURFACE TO BE STABLE, FIRM, AND SLIP RESISTANT. CONSTRUCT THE CURB RAMP TYPE AS SHOWN IN THE PAVEMENT MARKING PLANS OR AS DIRECTED BY THE ENGINEER.
2. LOCATE CURB RAMPS AND PLACE PEDESTRIAN CROSSWALK MARKINGS AS SHOWN IN THE PAVEMENT MARKING PLANS. WHEN FIELD ADJUSTMENTS REQUIRE MOVING CURB RAMPS OR MARKINGS AS SHOWN, CONTACT THE SIGNING AND DELINEATION UNIT OR LOCATE AS DIRECTED BY THE ENGINEER.
3. COORDINATE THE CURB RAMP AND THE PEDESTRIAN CROSSWALK MARKINGS SO A 4'x4' CLEAR SPACE AT THE BASE OF THE CURB RAMP WILL FALL WITHIN THE PEDESTRIAN CROSSWALK LINES.
4. SET BACK DISTANCE FROM INSIDE CROSSWALK MARKING TO NEAREST EDGE OF TRAVEL LANE IS 4' MINIMUM.
5. REFER TO THE PAVEMENT MARKING PLANS FOR STOP BAR LOCATIONS AT SIGNALIZED INTERSECTIONS. IF A PAVEMENT MARKING PLAN IS NOT PROVIDED, CONTACT THE SIGNAL DESIGN SECTION FOR THE STOP BAR LOCATIONS OR LOCATE AS DIRECTED BY THE ENGINEER.
6. TERMINATE PARKING A MINIMUM OF 20' BACK OF A PEDESTRIAN CROSSWALK.
7. CONSTRUCT CURB RAMPS A MINIMUM OF 4' WIDE.
8. CONSTRUCT THE RUNNING SLOPE OF THE RAMP 8.33% MAXIMUM.
9. ALLOWABLE CROSS SLOPE ON SIDEWALKS AND CURB RAMPS WILL BE 2% MAXIMUM.
10. CONSTRUCT THE SIDE FLARE SLOPE A MAXIMUM OF 10% MEASURED ALONG THE CURB LINE.
11. CONSTRUCT THE COUNTER SLOPE OF THE GUTTER OR STREET AT THE BASE OF THE CURB RAMP A MAXIMUM OF 5% AND MAINTAIN A SMOOTH TRANSITION.
12. CONSTRUCT LANDINGS FOR SIDEWALK A MINIMUM OF 4'x4' WITH A MAXIMUM SLOPE OF 2% IN ANY DIRECTION. CONSTRUCT LANDINGS FOR MEDIAN ISLANDS A MINIMUM OF 5'x5' WITH A MAXIMUM SLOPE OF 2% IN ANY DIRECTION.
13. TO USE A MEDIAN ISLAND AS A PEDESTRIAN REFUGE AREA, MEDIAN ISLANDS WILL BE A MINIMUM OF 6' WIDE. CONSTRUCT MEDIAN ISLANDS TO PROVIDE PASSAGE OVER OR THROUGHT THE ISLAND.
14. SMALL CHANNELIZATION ISLANDS THAT CAN NOT PROVIDE A 5'X5' LANDING AT THE TOP OF A RAMPS, WILL BE CUT THROUGH LEVEL WITH THE SURFACE STREET.
15. CURB RAMPS WITH RETURNED CURBS MAY BE USED ONLY WHERE PEDESTRIANS WOULD NOT NORMALLY WALK ACROSS THE RAMP. THE ADJACENT SURFACE IS PLANTING OR OTHER NON-WALKING SURFACE OR THE SIDE APPROACH IS SUBSTANTIALLY OBSTRUCTED.
16. PLACE A ½" EXPANSION JOINT WHERE THE CONCRETE CURB RAMP JOINS THE CURB AS SHOWN IN ROADWAY STANDARD DRAWING 848.01
17. PLACE ALL PEDESTRIAN PUSH BUTTON ACTUATORS AND CROSSING SIGNALS AS SHOWN IN THE PLANS OR AS SHOWN IN THE MUTCD.
18. CURB RAMPS THROUGH MEDIAN ISLANDS, SINGLE RAMPS AT DUAL CROSSWALKS OR LIMITED R/W SITUATIONS, WILL BE HANDLED BY SPECIAL DETAILS. CONTACT THE CONTRACT STANDARDS AND DEVELOPMENT UNIT FOR THE DETAILS OR FOR A SPECIAL DESIGN.

STATE OF NORTH CAROLINA DEPT. OF TRANSPORTATION DIVISION OF HIGHWAYS RALEIGH, N.C. 1-18

SHEET 3 OF 3 848.05

CITY OF RALEIGH - PLANS AUTHORIZED FOR CONSTRUCTION

Electronic Approval: This approval is being issued electronically. This approval is valid only upon the signature of a City of Raleigh Review Officer below. The City will retain a copy of the approved plans. Any work authorized by this approval must proceed in accordance with the plans kept on file with the City. This electronic approval may not be edited once issued. Any modification to this approval once issued will invalidate this approval.

City of Raleigh Development Approval ______________________

Raleigh Water Review Officer

09/01/23

BNK
BASS, NIXON & KENNEDY, INC.
CONSULTING ENGINEERS
6310 CHAPEL HILL ROAD, SUITE 250, RALEIGH, NC 27607
TELEPHONE: (919)851-4422 FAX: (919)851-8968
CERTIFICATION NUMBERS: NCBELS (C-0110); NCBOLA (C-0267)

NO.	DATE	DESCRIPTION	BY
REVISIONS			

03-19157	PROGRESS	MRM
JOB NO.	DATE	DRAWN BY

DETAILS

SCALE: N.T.S. CHK BY: MDB

COBBLESTONE VILLAGE
MIXED USE DEVELOPMENT
TOWN OF ROLESVILLE, WAKE COUNTY, NORTH CAROLINA

SHEET C5.6

NOT RELEASED FOR CONSTRUCTION OR BID SOLICITATION

TOWN OF ROLESVILLE PROJECT NO.

EIFS FINISH
SW6203 - SPARE WHITE

FIBER CEMENT SIDING
SW7048 - URBANE BRONZE

STAMPED EIFS WATERTABLE

BRICK VENEER
TRIANGLE - BESSEMER GREY

MATERIAL SWATCHES - BUILDING 4

1" = 1'-0"

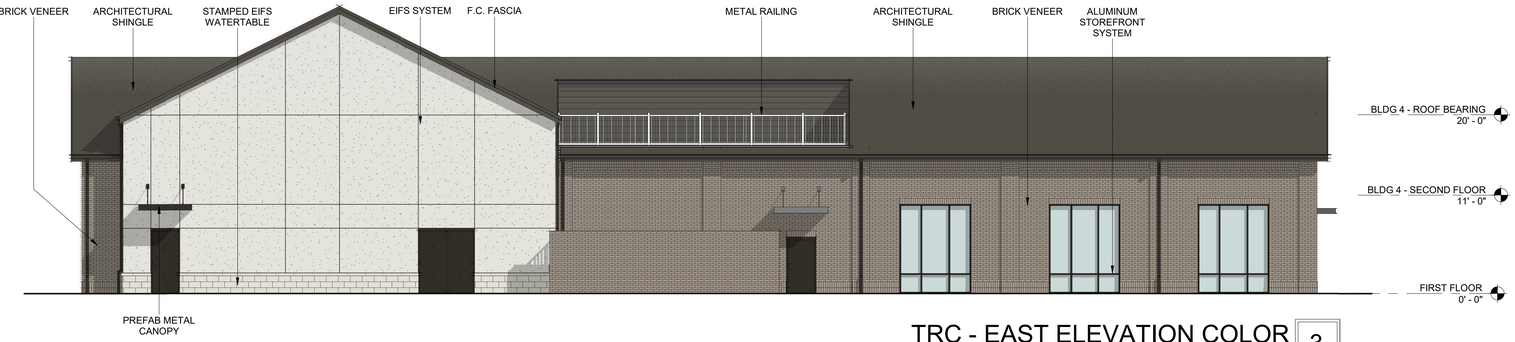

TRC - EAST ELEVATION COLOR

1/8" = 1'-0"

3

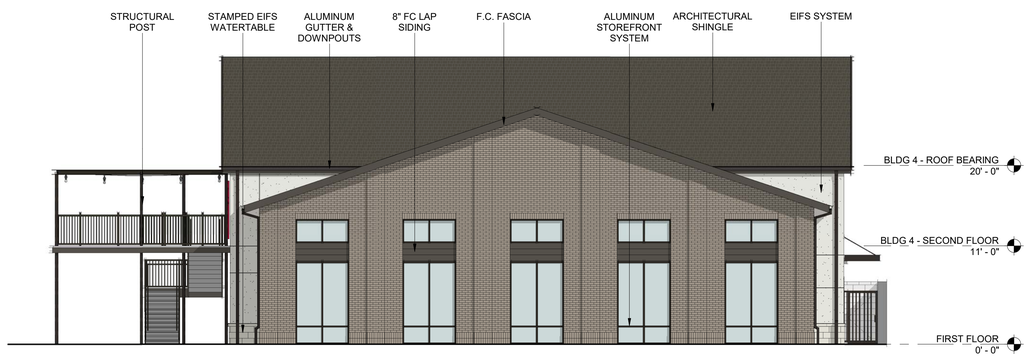

TRC - SOUTH ELEVATION COLOR

1/8" = 1'-0"

4

TRANSPARENCY CALCULATIONS

GROUND LEVEL (RETAIL USE):

TOTAL FACADE AREA (WxH):	496 SF
REQ'D AREA OF TRANSPARENCY:	496 SF x 0.4 = 198 SF
AREA OF TRANSPARENCY:	**198 SF 40%**

Section 7.4: - Town Center Overlay District

7.4.18 Windows, doors, display windows and/or arcades shall make up at least 40 percent of the street façade on the first story as measured from two feet above grade to ten feet above grade.
Blank walls are not permitted adjacent to streets.

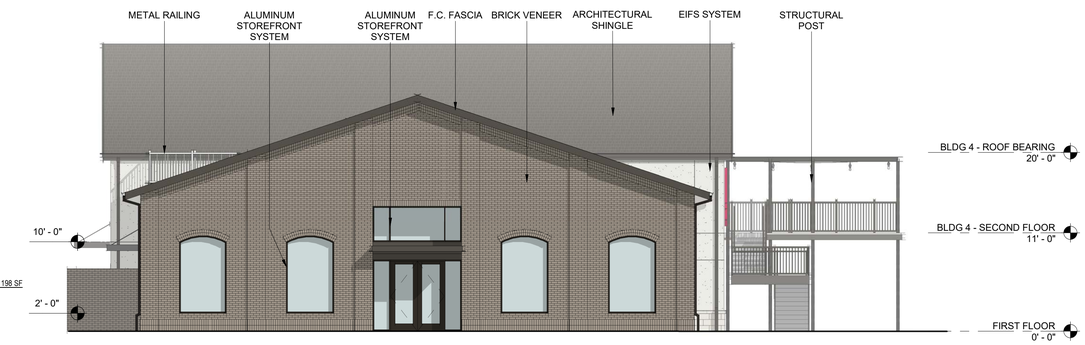

TRC - NORTH ELEVATION COLOR

1/8" = 1'-0"

2

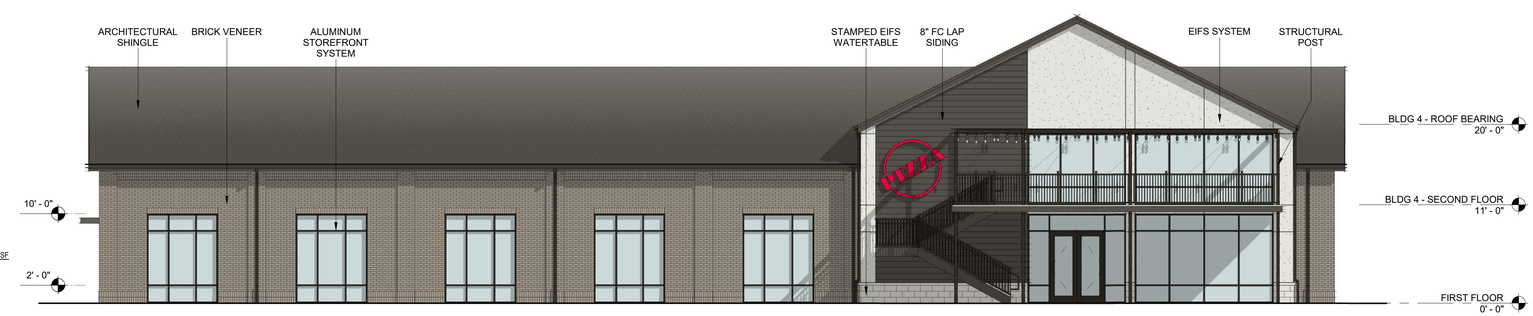

TRANSPARENCY CALCULATIONS

GROUND LEVEL (RETAIL USE):

TOTAL FACADE AREA (WxH):	1,105 SF
REQ'D AREA OF TRANSPARENCY:	1,105 SF x 0.4 = 442 SF
AREA OF TRANSPARENCY:	**442 SF 40%**

Section 7.4: - Town Center Overlay District

7.4.18 Windows, doors, display windows and/or arcades shall make up at least 40 percent of the street façade on the first story as measured from two feet above grade to ten feet above grade.
Blank walls are not permitted adjacent to streets.

TRC - WEST ELEVATION COLOR

1/8" = 1'-0"

1

CLINE DESIGN

COBBLESTONE VILLAGE

ROLESVILLE, NORTH CAROLINA

EXTERIOR ELEVATIONS - BUILDING 4 **A04**

As indicated | 019032 | 09.01.23

FIBER CEMENT SIDING
SW7048 - URBANE BRONZE

BRICK VENEER
TRIANGLE - BESSEMER GREY

MAT. SWATCHES - BLDG 5

1" = 1'-0"

3D View_BLDG 5 - SE 6

3D View_BLDG 5 - NE 5

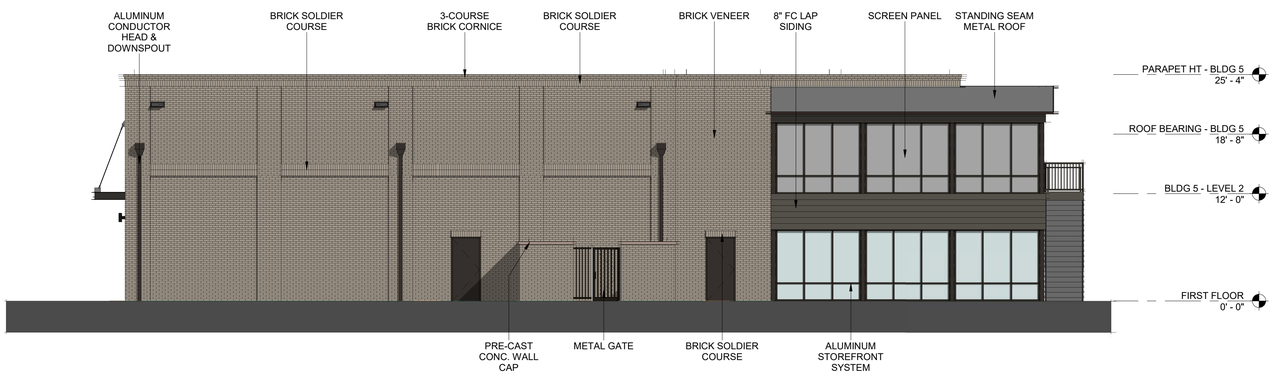

BLDG 5 - WEST ELEVATION 4

1/8" = 1'-0"

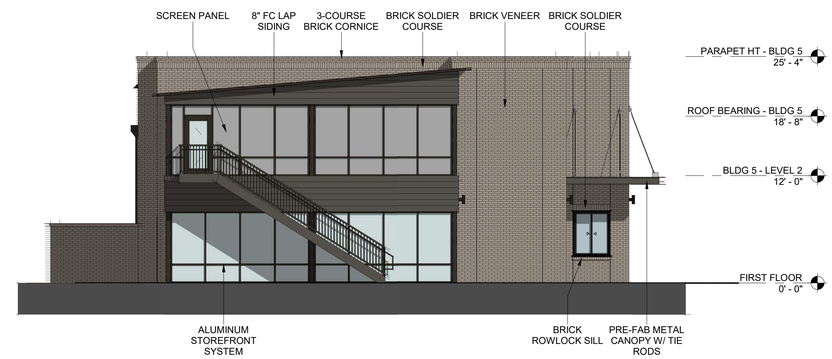

BLDG 5 - SOUTH ELEVATION 2

1/8" = 1'-0"

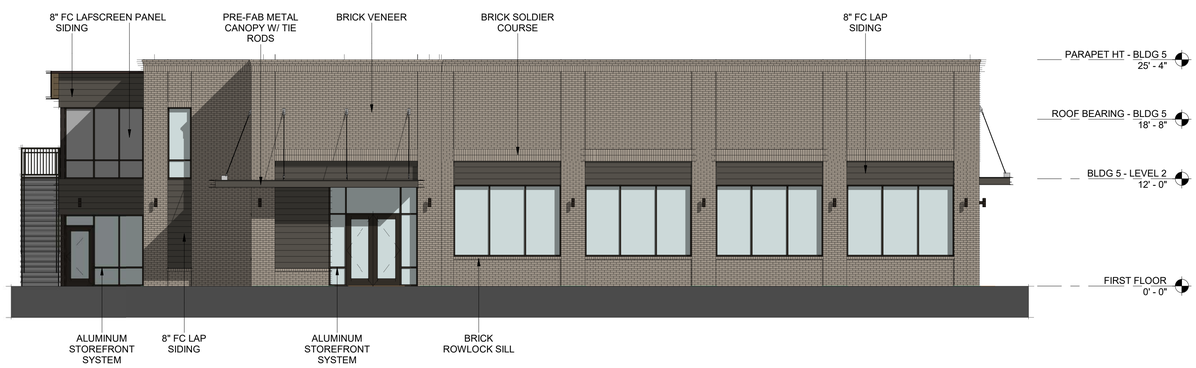

TRANSPARENCY CALCULATIONS

GROUND LEVEL (RETAIL USE):

TOTAL FACADE AREA (WxH):	824 SF
REQ'D AREA OF TRANSPARENCY:	824 SF x 0.4 = 330 SF
AREA OF TRANSPARENCY:	**453 SF 55%**

Section 7.4: - Town Center Overlay District

7.4.18 Windows, doors, display windows and/or arcades shall make up at least 40 percent of the street façade on the first story as measured from two feet above grade to ten feet above grade.
Blank walls are not permitted adjacent to streets.

BLDG 5 - EAST ELEVATION 3

1/8" = 1'-0"

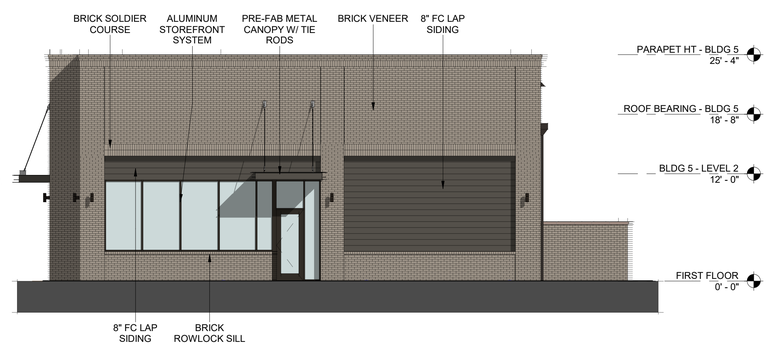

TRANSPARENCY CALCULATIONS

GROUND LEVEL (RETAIL USE):

TOTAL FACADE AREA (WxH):	412 SF
REQ'D AREA OF TRANSPARENCY:	412 SF x 0.4 = 165 SF
AREA OF TRANSPARENCY:	**165 SF 40%**

Section 7.4: - Town Center Overlay District

7.4.18 Windows, doors, display windows and/or arcades shall make up at least 40 percent of the street façade on the first story as measured from two feet above grade to ten feet above grade.
Blank walls are not permitted adjacent to streets.

BLDG 5 - NORTH ELEVATION 1

1/8" = 1'-0"

CLINE DESIGN

COBBLESTONE VILLAGE

ROLESVILLE, NORTH CAROLINA

EXTERIOR ELEVATIONS - BUILDING 5 **A05**

As indicated | 019032 | 09.01.23

BLDG 8 - 03 RIGHT SIDE ELEVATION 4

1/8" = 1'-0"

BLDG 8 - 02 REAR ELEVATION 2

1/8" = 1'-0"

BLDG 8 - 04 LEFT SIDE ELEVATION 3

1/8" = 1'-0"

BLDG 8 - 01 FRONT ELEVATION 1

1/8" = 1'-0"

SW 7048 Urbane Bronze	SW 2803 Rookwood Terra Cotta	SW 6187 Rosemary	SW 9164 Illusive Green	SW 7042 Shoji White	SW 7006 Extra White	
LAP SIDING - 8" EXPOSURE PANEL & TRIM BOARD	LAP SIDING - 8" EXPOSURE	BOARD & BATTON SIDING	LAP SIDING - 6" EXPOSURE PANEL & TRIM BOARD	LAP SIDING - 6" EXPOSURE	PANEL & TRIM BOARD	

CLINE DESIGN

COBBLESTONE VILLAGE

ROLESVILLE, NORTH CAROLINA

EXTERIOR ELEVATIONS - BUILDING 8 **A08**

1/8" = 1'-0" | 019032 | 09.01.23