SEE SHEET C6.05

WALLBROOK DRIVE
DESIGNED BY OTHERS
(60' PUBLIC R/W)

OFFSITE IMPROVEMENTS BY OTHERS (UNDER SEPARATE COVER)

EROSION CONTROL BLANKET

TEMPORARY INLET PROTECTION (TYP.)

50' NEUSE RIPARIAN BUFFER (MEASURED 50' FROM TOP OF BANK, EACH SIDE)

20' TYPE 'B' BUFFER

EXISTING 20' SANITARY SEWER EASEMENT DB 10071 PG 2179 BM 2003 PG 647

SILT FENCE (TYP.)

SILT FENCE OUTLET AT ALL LOW POINTS (TYP.)

SB-B (TO BE CONVERTED INTO PERMANENT SCM-B)

VELOCITY DISSIPATOR NCDOT CLASS 'B' RIPRAP 18'L (MIN) X 9'W X 22" THICK

MATCH LINE 2-2, SEE THIS SHEET

MATCH LINE 2-2, SEE INSET "B" THIS SHEET

NC GRID (NAD83)

GRAPHIC SCALE
0 20 40 80
1 inch = 40 ft.

EROSION CONTROL LEGEND

- SILT FENCE OUTLET
- INLET PROTECTION
- INLET PROTECTION FOR EXISTING STRUCTURES
- TEMPORARY SLOPE DRAIN
- FILTER BERM
- CHECK DAM
- SF — SF — SF — SILT FENCE
- TP — TP — TP — TREE PROTECTION FENCE
- LD — LD — LIMITS OF DISTURBANCE
- WOODED AREA
- DIVERSION DITCH
- CONSTRUCTION ENTRANCE/EXIT

EASEMENT LEGEND

- PRDE PRIVATE STORM DRAINAGE EASEMENT
- DE PUBLIC STORM DRAINAGE EASEMENT
- UE UTILITY EASEMENT

MATCH LINE 2-2, SEE THIS SHEET

50' NEUSE RIPARIAN BUFFER (MEASURED 50' FROM TOP OF BANK, EACH SIDE)

EXISTING RIPRAP

AERIAL SEWER CROSSING PER CITY OF RALEIGH DETAILS (SEE SHEET C8.06)

SS OUTFALL "A"

EX. SS

30' CITY OF RALEIGH SANITARY SEWER EASEMENT

SILT FENCE OUTLET AT ALL LOW POINTS (TYP.)

EXISTING 20' SANITARY SEWER EASEMENT DB 10071 PG 2179 BM 2003 PG 647

SILT FENCE (TYP.)

LIMITS OF DISTURBANCE/TREE PROTECTION FENCE (TYP.)

NC GRID (NAD83)

INSET "B"
SCALE: 1" = 40'

C6.05 AREA "A"

C6.06 AREA "B"

INDEX MAP
NTS

FINAL DRAWING - RELEASED FOR CONSTRUCTION

McADAMS
The John R. McAdams Company, Inc.
621 Hillsborough Street
Suite 500
Raleigh, NC 27603
phone 919. 361. 5000
fax 919. 361. 2269
license number: C-0293, C-187
www.mcadamsco.com

WALLBROOK LANDCO, LLC
3 KEEL STREET, SUITE 2
WRIGHTSVILLE BEACH, NORTH CAROLINA
28480-1709

WALLBROOK
CONSTRUCTION DRAWINGS
ROLESVILLE, NORTH CAROLINA

NORTH CAROLINA PROFESSIONAL SEAL 22630 ENGINEER WILLIAM T. O'DANIEL

Digitally signed by William T O'Daniel
Date: 2024.08.30 15:47:56-04'00'

REVISIONS

NO.	DATE	
1	09. 27. 2023	WALL CREEK DRIVE TIE-IN REVISIONS
2	11. 02. 2023	EW-400 REVISION
3	05. 10. 2024	UPDATING SCM B GRADING AND SCM A OUTLET
4	06. 06. 2024	SEWER MANHOLE REVISIONS
5	08. 30. 2024	UPDATED BUILDING FOOTPRINTS AND IMPERVIOUS AREA

PLAN INFORMATION

PROJECT NO.	CPR-19100
FILENAME	CPR19100-CD-EC2
CHECKED BY	WTO
DRAWN BY	JMS
SCALE	1"=40'
DATE	05. 22. 2023

SHEET

EROSION CONTROL PLAN - STAGE 2 - AREA "B"

C6.06

X:\Projects\CPR\CPR-19100\04-Production\Engineering\Site Plan-Construction Drawings\Current Drawings\CPR19100-CD-EC2.dwg, 8/29/2024 12:20:15 PM, Tommy Dabolt

EXISTING CRESSTAR DRIVE (50' PUBLIC R/W)

EXISTING GREEN TURRET DRIVE (50' PUBLIC R/W)

EXISTING WALL CREEK DRIVE (60' PUBLIC R/W)

ANTONIO G & SHELIA B CATTARUZZA DB 8149 PG 422

CHARLES & TERESA CULBERTSON DB 17393 PG 896

JOHN DANIEL III & SABRINA MICHELE BONO DB 13369 PG 2170

RONALD G & LAURA A PATTERSON DB 10087 PG 2409

VALARIE PASIECKI-REEVES KELLY PASIECKI-REEVES DB 18035 PG 2129

MICHAEL A & JENNIFER H HADDER DB 16143 PG 2477

JOSEPH L III & SARAH E KEELEY DB 10496 PG 1314

PHILIP B & ELIZABETH J MCENANEY DB 16674 PG 2208

KATHRYN G & DONALD P MCFARLAND DB 16914 PG 210

JAMES A & PHYLLIS A WOODARD DB 9813 PG 1290

SEE SHEET C5.07 FOR SS OUTFALL "A" EROSION CONTROL MEASURES

EX. SHED

EX. TRANSFORMERS (2)
EX. CATV RISER
EX. TEL PED #37EER5-6
EX. LIGHT POLE
TO REMAIN

SILT FENCE (TYP.)

50' NEUSE RIPARIAN BUFFER (MEASURED 50' FROM TOP OF BANK, EACH SIDE)

LIMITS OF DISTURBANCE/TREE PROTECTION FENCE (TYP.)

RETAINING WALL (DESIGN BY OTHERS)

STORMWATER CONTROL MEASURE "B" (WET POND)

WALLSTONE WAY (50' PUBLIC R/W)

STORMWATER CONTROL MEASURE "A" (WET POND)

FUTURE COMMERCIAL (REFERENCE PR 21-04 WALLBROOK PRELIMINARY PLAT AND MAIN STREET PROJECT(NCDOT U-6241))

LETTIE LN (50' PUBLIC R/W)

ZIGGY LN (20' ACCESS EASEMENT)

US-401 BUSINESS DRIVEWAY PERMIT NUMBER: D051-092-22-00049

WALL CREEK DRIVE (60' PUBLIC R/W)

CHIMNEY DR (50' PUBLIC R/W)

DEEP OAK DR (20' ACCESS EASEMENT)

ROLES WAY (20' ACCESS EASEMENT)

OFFSITE IMPROVEMENTS DESIGNED BY OTHERS UNDER SEPARATE COVER

WALLBROOK LANDCO, LLC DB 018103 PG 01563

EX. WELL TO BE REMOVED BY OTHERS

EX. STONE CHIMNEY TO BE RELOCATED/REMOVED BY OTHERS

WALLBROOK DRIVE DESIGNED BY OTHERS (VARIABLE WIDTH PUBLIC R/W)

LIMITS OF DISTURBANCE (TYP.)

RANDY DR (20' ACCESS EASEMENT)

WALLSTONE WAY (50' PUBLIC R/W)

WALLBROOK LANDCO LLC DB 17801 PG 1550

WALLBROOK DRIVE DESIGNED BY OTHERS (60' PUBLIC R/W)

OFFSITE IMPROVEMENTS DESIGNED BY OTHERS UNDER SEPARATE COVER

EXISTING S. MAIN STREET (VARIABLE WIDTH PUBLIC R/W)

CARLTON GROUP OF NC LLC DB 11427 PG 882

EXISTING 20' SANITARY SEWER EASEMENT DB 10071 PG 2179 BM 2003 PG 647

EXISTING VIRGINIA WATER DRIVE (50' PUBLIC R/W)

WALLBROOK LANDCO, LLC DB 018103 PG 01563

EROSION CONTROL LEGEND

- SILT FENCE OUTLET
- INLET PROTECTION
- INLET PROTECTION FOR EXISTING STRUCTURES
- TEMPORARY SLOPE DRAIN
- FILTER BERM
- CHECK DAM
- SF — SF — SF — SILT FENCE
- TP — TP — TP — TREE PROTECTION FENCE
- LD — LD — LIMITS OF DISTURBANCE
- WOODED AREA
- DIVERSION DITCH
- CONSTRUCTION ENTRANCE/EXIT

C6.08 AREA "A"

C6.09 AREA "B"

INDEX MAP
NTS

DISTURBED AREA = 18.5 AC.

GRAPHIC SCALE
0 30 60 120
1 inch = 60 ft.

FINAL DRAWING - RELEASED FOR CONSTRUCTION

X:\Projects\CPR\CPR-19100\04-Production\Engineering\Site Plan-Construction Drawings\Current Drawings\CPR19100-CD-OAEC3.dwg, 8/29/2024 12:24:47 PM, Tommy Dubolt

McADAMS

The John R. McAdams Company, Inc.
621 Hillsborough Street
Suite 500
Raleigh, NC 27603

phone 919. 361. 5000
fax 919. 361. 2269
license number: C-0293, C-187

www.mcadamsco.com

WALLBROOK LANDCO, LLC
3 KEEL STREET, SUITE 2
WRIGHTSVILLE BEACH, NORTH CAROLINA
28480-1709

WALLBROOK
CONSTRUCTION DRAWINGS
ROLESVILLE, NORTH CAROLINA

NORTH CAROLINA PROFESSIONAL SEAL 22630 ENGINEER WILLIAM T. O'DANIEL

Digitally signed by William T O'Daniel
Date: 2024.08.30 15:47:57-04'00'

REVISIONS

NO.	DATE	
1	09. 27. 2023	WALL CREEK DRIVE TIE-IN REVISIONS
2	11. 02. 2023	EW-400 REVISION
3	05. 10. 2024	UPDATING SCM B GRADING AND SCM A OUTLET
4	06. 06. 2024	SEWER MANHOLE REVISIONS
5	08. 30. 2024	UPDATED BUILDING FOOTPRINTS AND IMPERVIOUS AREA

PLAN INFORMATION

PROJECT NO.	CPR-19100
FILENAME	CPR19100-CD-OAEC3
CHECKED BY	WTO
DRAWN BY	JMS
SCALE	1"=60'
DATE	05. 22. 2023

SHEET

OVERALL EROSION CONTROL PLAN - STAGE 3

C6.07

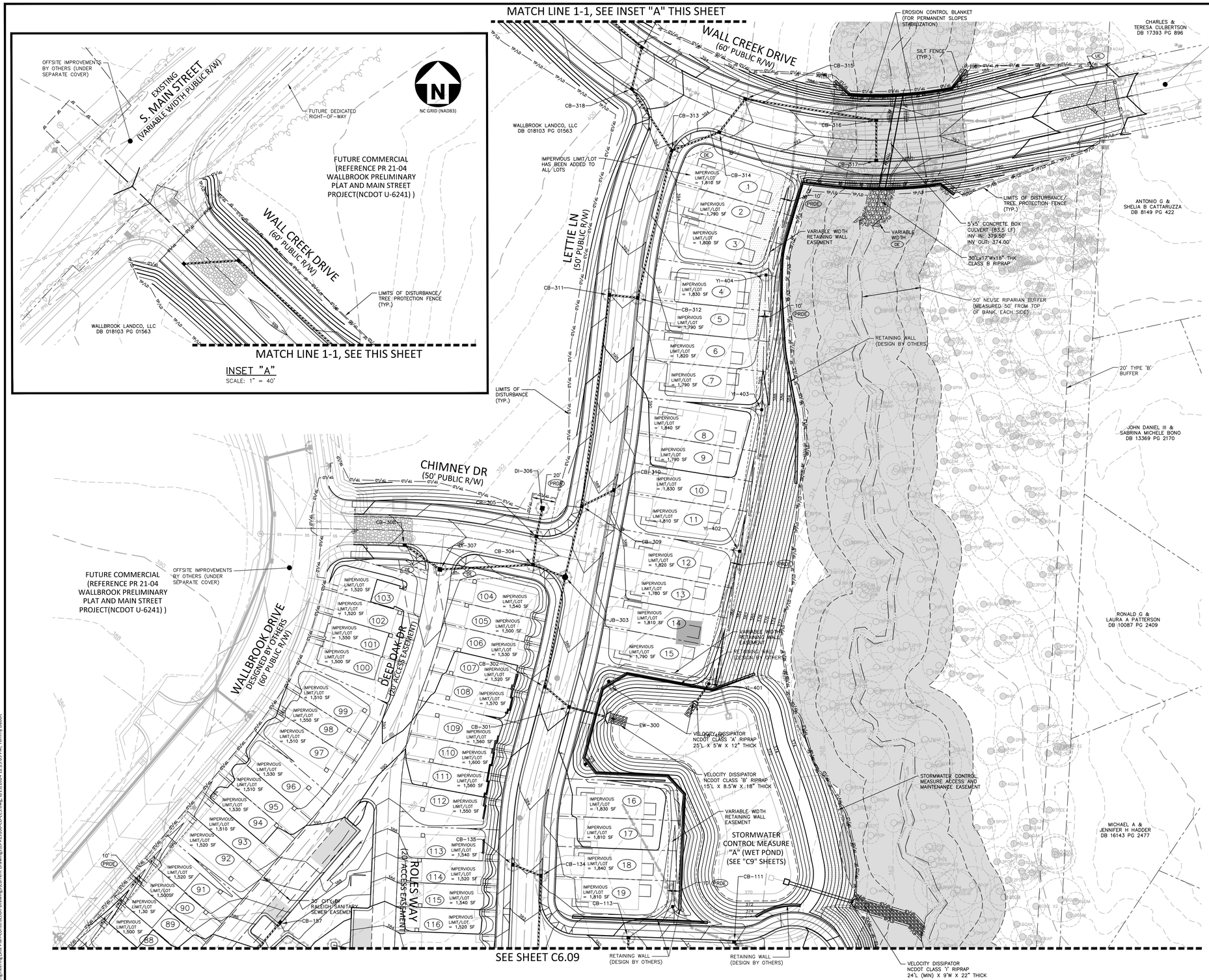

EROSION CONTROL LEGEND

- SILT FENCE OUTLET
- INLET PROTECTION
- INLET PROTECTION FOR EXISTING STRUCTURES
- TEMPORARY SLOPE DRAIN
- FILTER BERM
- CHECK DAM
- SF — SF — SF — SILT FENCE
- TP — TP — TP — TREE PROTECTION FENCE
- LD — LD — LIMITS OF DISTURBANCE
- WOODED AREA
- DIVERSION DITCH
- CONSTRUCTION ENTRANCE/EXIT
- EROSION CONTROL BLANKET

EASEMENT LEGEND

- PRDE PRIVATE STORM DRAINAGE EASEMENT
- DE PUBLIC STORM DRAINAGE EASEMENT
- UE UTILITY EASEMENT

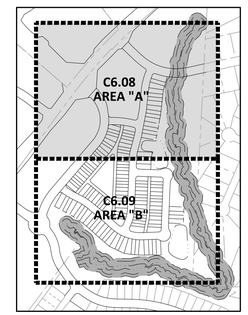

INDEX MAP
NTS

NC GRID (NAD83)

GRAPHIC SCALE
0 20 40 80
1 inch = 40 ft.

FINAL DRAWING - RELEASED FOR CONSTRUCTION

McADAMS
The John R. McAdams Company, Inc.
621 Hillsborough Street
Suite 500
Raleigh, NC 27603
phone 919. 361. 5000
fax 919. 361. 2269
license number: C-0293, C-187
www.mcadamsco.com

WALLBROOK LANDCO, LLC
3 KEEL STREET, SUITE 2
WRIGHTSVILLE BEACH, NORTH CAROLINA
28480-1709

WALLBROOK
CONSTRUCTION DRAWINGS
ROLESVILLE, NORTH CAROLINA

NORTH CAROLINA PROFESSIONAL SEAL 22630 ENGINEER WILLIAM T. O'DANIEL

Digitally signed by William T O'Daniel
Date: 2024.08.30 15:47:59-04'00'

REVISIONS

NO.	DATE	
1	09. 27. 2023	WALL CREEK DRIVE TIE-IN REVISIONS
2	11. 02. 2023	EW-400 REVISION
3	05. 10. 2024	UPDATING SCM B GRADING AND SCM A OUTLET
4	06. 06. 2024	SEWER MANHOLE REVISIONS
5	08. 30. 2024	UPDATED BUILDING FOOTPRINTS AND IMPERVIOUS AREA

PLAN INFORMATION

PROJECT NO.	CPR-19100
FILENAME	CPR19100-CD-EC3
CHECKED BY	WTO
DRAWN BY	JMS
SCALE	1"=40'
DATE	05. 22. 2023

SHEET

EROSION CONTROL PLAN - STAGE 3 - AREA "A"

C6.08

A:\Projects\CPR\CPR-19100\04-Production\Engineering\Site Plan-Construction Drawings\Current Drawing\CPR19100-CD-EC3.dwg, 8/29/2024 12:23:05 PM, Tommy Dalbolt

SEE SHEET C6.08

SEE SHEET C6.08 FOR PERMANENT EROSION CONTROL MEASURES INFORMATION

RETAINING WALL (DESIGN BY OTHERS)

WALLSTONE WAY (50' PUBLIC R/W)

WALLBROOK DRIVE DESIGNED BY OTHERS (60' PUBLIC R/W)

DEER OAK DR. (20' ACCESS EASEMENT)

RANDY DR. (20' ACCESS EASEMENT)

ROLESWAY (20' ACCESS EASEMENT)

ZIGGY LN (20' ACCESS EASEMENT)

LETTIE LN (50' PUBLIC R/W)

OFFSITE IMPROVEMENTS BY OTHERS (UNDER SEPARATE COVER)

30' CITY OF RALEIGH SANITARY SEWER EASEMENT

TEMPORARY INLET PROTECTION (TYP.)

VARIABLE WIDTH RETAINING WALL EASEMENT

RETAINING WALL (DESIGN BY OTHERS)

50' NEUSE RIPARIAN BUFFER (MEASURED 50' FROM TOP OF BANK, EACH SIDE)

VELOCITY DISSIPATOR NCDOT CLASS "A" RIPRAP 5'L X 5'W X 12" THICK

VELOCITY DISSIPATOR NCDOT CLASS "B" RIPRAP 15'L X 8.5'W X 18" THICK

EXISTING 20' SANITARY SEWER EASEMENT DB 10071, PG 2179 BM 2003, PG 647

20' TYPE "B" BUFFER

SILT FENCE (TYP.)

SILT FENCE OUTLET AT ALL LOW POINTS (TYP.)

STORMWATER CONTROL MEASURE "B" (WET POND) (SEE "C9" SHEETS)

30' TOWN OF ROLESVILLE SCM ACCESS EASEMENT AND CITY OF RALEIGH SANITARY SEWER EASEMENT

STORMWATER CONTROL MEASURE ACCESS AND MAINTENANCE EASEMENT

VELOCITY DISSIPATOR NCDOT CLASS "B" RIPRAP 18'L (MIN) X 9'W X 22" THICK

MATCH LINE 2-2, SEE INSET "B" THIS SHEET

EROSION CONTROL LEGEND

- SILT FENCE OUTLET
- INLET PROTECTION
- INLET PROTECTION FOR EXISTING STRUCTURES
- TEMPORARY SLOPE DRAIN
- FILTER BERM
- CHECK DAM
- SF — SILT FENCE
- TP — TREE PROTECTION FENCE
- LD — LIMITS OF DISTURBANCE
- WOODED AREA
- DIVERSION DITCH
- CONSTRUCTION ENTRANCE/EXIT

EASEMENT LEGEND

- PRDE — PRIVATE STORM DRAINAGE EASEMENT
- DE — PUBLIC STORM DRAINAGE EASEMENT
- UE — UTILITY EASEMENT

MATCH LINE 2-2, SEE THIS SHEET

50' NEUSE RIPARIAN BUFFER (MEASURED 50' FROM TOP OF BANK, EACH SIDE)

EXISTING RIPRAP

AERIAL SEWER CROSSING PER CITY OF RALEIGH DETAILS (SEE SHEET C8.06)

SS OUTFALL "A"

EX. SS

30' CITY OF RALEIGH SANITARY SEWER EASEMENT

SILT FENCE OUTLET AT ALL LOW POINTS (TYP.)

EXISTING 20' SANITARY SEWER EASEMENT DB 10071, PG 2179 BM 2003, PG 647

SILT FENCE (TYP.)

LIMITS OF DISTURBANCE/TREE PROTECTION FENCE (TYP.)

NC GRID (NAD83)

INSET "B"
SCALE: 1" = 40'

C6.08 AREA "A"

C6.09 AREA "B"

INDEX MAP
NTS

NC GRID (NAD83)

GRAPHIC SCALE
0 20 40 80
1 inch = 40 ft.

FINAL DRAWING - RELEASED FOR CONSTRUCTION

McADAMS

The John R. McAdams Company, Inc.
621 Hillsborough Street
Suite 500
Raleigh, NC 27603

phone 919. 361. 5000
fax 919. 361. 2269
license number: C-0293, C-187

www.mcadamsco.com

WALLBROOK LANDCO, LLC
3 KEEL STREET, SUITE 2
WRIGHTSVILLE BEACH, NORTH CAROLINA
28480-1709

WALLBROOK
CONSTRUCTION DRAWINGS
ROLESVILLE, NORTH CAROLINA

NORTH CAROLINA PROFESSIONAL SEAL 22630 ENGINEER WILLIAM T. O'DANIEL

Digitally signed by William T O'Daniel
Date: 2024.08.30 15:48:01-04'00'

REVISIONS

NO.	DATE	
1	09. 27. 2023	WALL CREEK DRIVE TIE-IN REVISIONS
2	11. 02. 2023	EW-400 REVISION
3	05. 10. 2024	UPDATING SCM B GRADING AND SCM A OUTLET
4	06. 06. 2024	SEWER MANHOLE REVISIONS
5	08. 30. 2024	UPDATED BUILDING FOOTPRINTS AND IMPERVIOUS AREA

PLAN INFORMATION

PROJECT NO.	CPR-19100
FILENAME	CPR19100-CD-EC3
CHECKED BY	WTO
DRAWN BY	JMS
SCALE	1"=40'
DATE	05. 22. 2023

SHEET

EROSION CONTROL PLAN - STAGE 3 - AREA "B"

C6.09

X:\Projects\CPR\CPR-19100\04-Production\Engineering\Site Plan-Construction Drawings\Current Drawings\CPR19100-CD-EC3.dwg, 8/29/2024 12:23:51 PM, Tommy Dabolt

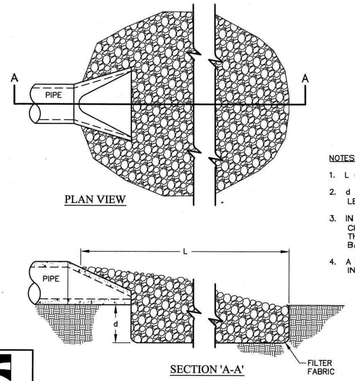

NOTES:

1. L = THE LENGTH OF THE RIPRAP APRON.
2. d = 1.5 TIMES THE MAXIMUM STONE DIAMETER BUT NOT LESS THAN 6" (INCHES).
3. IN A WELL-DEFINED CHANNEL EXTEND THE APRON UP THE CHANNEL BANKS TO AN ELEVATION OF 6" (INCHES) ABOVE THE MAXIMUM TAILWATER DEPTH OR TO THE TOP OF THE BANK, WHICHEVER IS LESS.
4. A FILTER BLANKET OR FILTER FABRIC SHOULD BE INSTALLED BETWEEN THE RIPRAP AND SOIL FOUNDATION.

WAKE COUNTY NORTH CAROLINA

EFFECTIVE: 01/31/08

STANDARD PIPE OUTLET TO WELL-DEFINED CHANNEL

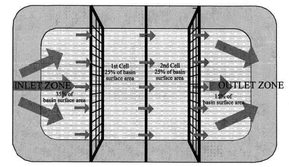

NOTES:

1. BAFFLE MATERIAL SHOULD BE SECURED AT THE BOTTOM AND SIDES USING STAPLES OR BY TRENCHING AS FOR SILT FENCE.
2. MOST OF THE SEDIMENT WILL ACCUMULATE IN THE 1ST BAY, WHICH SHOULD BE READILY ACCESSIBLE FOR MAINTENANCE.
3. PROVIDE 3 BAFFLES (USE TWO IF LESS THAN 20 FEET IN LENGTH). PROVIDE 5 BAFFLES FOR DRAINAGE AREAS GREATER THAN 10 ACRES.
4. BAFFLE SHALL BE 700 G/M2 COIR EROSION BLANKET.
5. TOPS OF BAFFLES SHOULD BE 2 INCHES LOWER THAN THE TOP OF THE BERMS
6. INSPECT BAFFLES FOR REPAIR ONCE A WEEK AND AFTER EACH RAINFALL

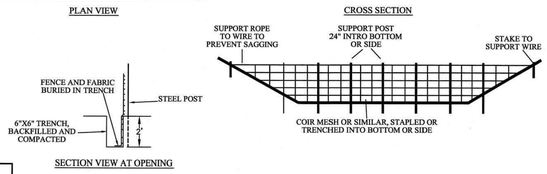

WAKE COUNTY NORTH CAROLINA

EFFECTIVE: 01/31/08

STANDARD BAFFLES DETAIL

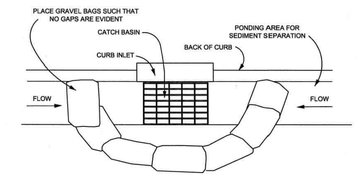

NOTES:

1. PLACE GRAVEL BAG BARRIER ON GENTLY SLOPING STREET, WHERE WATER CAN POND AND ALLOW SEDIMENT TO SEPARATE FROM RUNNOFF.
2. USE SAND BAGS OF WOVEN GEOTEXTILE FABRIC (NOT BURLAP) AND FILL WITH ¾ INCH (OR SMALLER) GRAVEL. BAGS MUST BE LAYERED SUCH THAT NO GAPS ARE EVIDENT.
3. INSPECT BARRIERS AND REMOVE SEDIMENT AFTER EACH STORM EVENT. SEDIMENT AND GRAVEL MUST BE REMOVED FROM THE TRAVELED WAY IMMEDIATELY.
4. WHEN INSTALLING CURB INLET PROTECTION DEVICES, **NEVER** BLOCK THE CURB INLET.

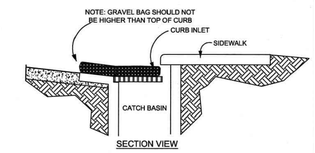

WAKE COUNTY NORTH CAROLINA

EFFECTIVE: 01/31/08

STANDARD GRAVEL BAG CURB INLET PROTECTION

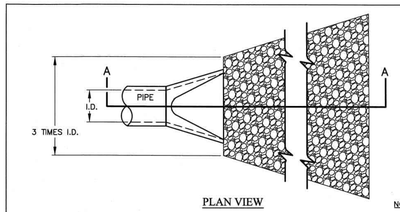

NOTES:

1. L = THE LENGTH OF THE RIPRAP APRON.
2. d = 1.5 TIMES THE MAXIMUM STONE DIAMETER BUT NOT LESS THAN 6" (INCHES).
3. A FILTER BLANKET OR FILTER FABRIC SHOULD BE INSTALLED BETWEEN THE RIPRAP AND SOIL FOUNDATION.

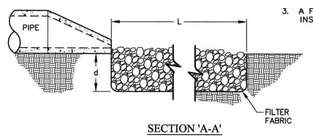

WAKE COUNTY NORTH CAROLINA

EFFECTIVE: 01/31/08

STANDARD PIPE OUTLET TO FLAT AREA
NO WELL-DEFINED CHANNEL

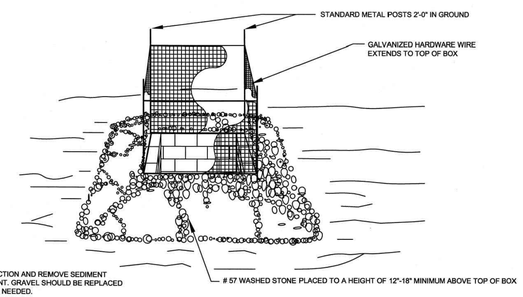

NOTE:

1. INSPECT INLET PROTECTION AND REMOVE SEDIMENT AFTER EACH RAIN EVENT. GRAVEL SHOULD BE REPLACED AND REPAIRS MADE AS NEEDED.

WAKE COUNTY NORTH CAROLINA

EFFECTIVE: 01/31/08

STANDARD GRAVEL YARD INLET PROTECTION

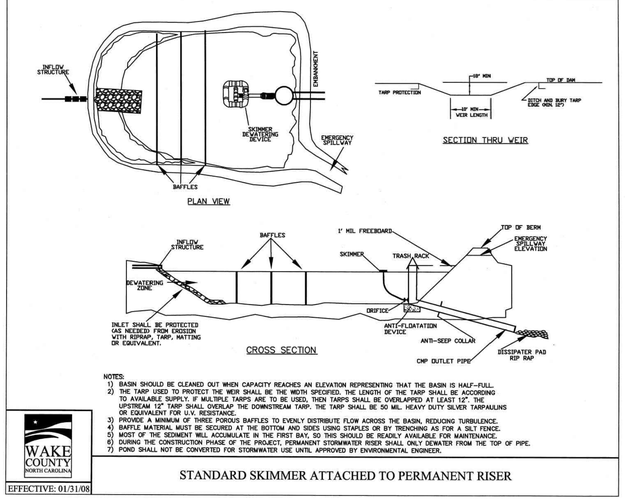

NOTES:

1) BASIN SHOULD BE CLEANED OUT WHEN CAPACITY REACHES AN ELEVATION REPRESENTING THAT THE BASIN IS HALF-FULL.
2) THE TARP USED TO PROTECT THE WEIR SHALL BE THE WIDTH SPECIFIED. THE LENGTH OF THE TARP SHALL BE ACCORDING TO AVAILABLE SUPPLY. IF MULTIPLE TARPS ARE TO BE USED, THEN TARPS SHALL BE OVERLAPPED AT LEAST 12". THE UPSTREAM 12" TARP SHALL OVERLAP THE DOWNSTREAM TARP. THE TARP SHALL BE 50 MIL. HEAVY DUTY SILVER TARPAULINS OR EQUIVALENT FOR U.V. RESISTANCE.
3) PROVIDE A MINIMUM OF THREE POROUS BAFFLES TO EVENLY DISTRIBUTE FLOW ACROSS THE BASIN, REDUCING TURBULENCE.
4) BAFFLE MATERIAL MUST BE SECURED AT THE BOTTOM AND SIDES USING STAPLES OR BY TRENCHING AS FOR A SILT FENCE.
5) MOST OF THE SEDIMENT WILL ACCUMULATE IN THE FIRST BAY, SO THIS SHOULD BE READILY AVAILABLE FOR MAINTENANCE.
6) DURING THE CONSTRUCTION PHASE OF THE PROJECT, PERMANENT STORMWATER RISER SHALL ONLY DEWATER FROM THE TOP OF PIPE.
7) POND SHALL NOT BE CONVERTED FOR STORMWATER USE UNTIL APPROVED BY ENVIRONMENTAL ENGINEER.

WAKE COUNTY NORTH CAROLINA

EFFECTIVE: 01/31/08

STANDARD SKIMMER ATTACHED TO PERMANENT RISER

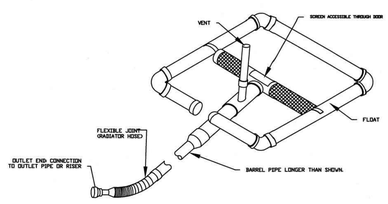

WAKE COUNTY NORTH CAROLINA

EFFECTIVE: 01/31/08

STANDARD SKIMMER DETAIL

CONSTRUCTION SPECIFICATIONS

1. LAY ONE BLOCK ON EACH SIDE OF THE STRUCTURE ON ITS SIDE IN THE BOTTOM ROW TO ALLOW POOL DRAINAGE. THE FOUNDATION SHOULD BE EXCAVATED AT LEAST 2 INCHES BELOW THE CREST OF THE STORM DRAIN. PLACE THE BOTTOM ROW OF BLOCKS AGAINST THE EDGE OF THE STORM DRAIN FOR LATERAL SUPPORT AND TO AVOID WASHOUTS WHEN OVERFLOW OCCURS. IF NEEDED, GIVE LATERAL SUPPORT TO SUBSEQUENT ROWS BY PLACING 2x4 WOOD STUDS THROUGH BLOCK OPENINGS.
2. CAREFULLY FIT HARDWARE CLOTH OR COMPARABLE WIRE MESH WITH 1/2 INCH OPENINGS OVER ALL BLOCK OPENINGS TO HOLD GRAVEL IN PLACE.
3. USE CLEAN GRAVEL, 3/4 TO 1/2 INCH IN DIAMETER, PLACED 2 INCHES BELOW THE TOP OF THE BLOCK ON A 2:1 SLOPE OR FLATTER AND SMOOTH IT TO AN EVEN GRADE. DOT #57 WASHED STONE IS RECOMMENDED.

MAINTENANCE: INSPECT INLET PROTECTION AND REMOVE SEDIMENT AFTER EACH RAIN EVENT. GRAVEL SHOULD BE REPLACED AND REPAIRS MADE AS NEEDED.

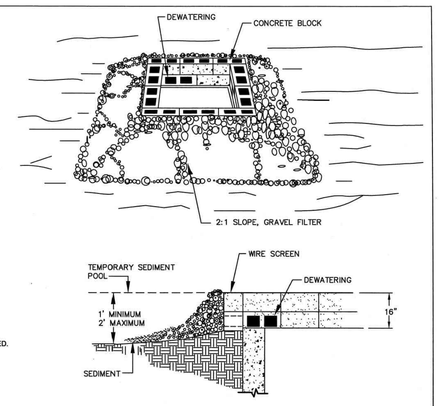

WAKE COUNTY NORTH CAROLINA

EFFECTIVE: 01/31/08

STANDARD BLOCK & GRAVEL DROP INLET PROTECTION

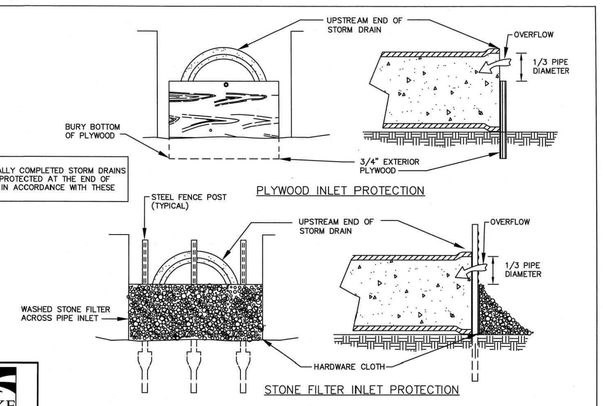

NOTE:
ALL PARTIALLY COMPLETED STORM DRAINS SHALL BE PROTECTED AT THE END OF EACH DAY IN ACCORDANCE WITH THESE DETAILS.

WAKE COUNTY NORTH CAROLINA

EFFECTIVE: 01/31/08

STANDARD PIPE INLET PROTECTION (PLYWOOD & STONE)

McADAMS

The John R. McAdams Company, Inc.
621 Hillsborough Street
Suite 500
Raleigh, NC 27603

phone 919. 361. 5000
fax 919. 361. 2269
license number: C-0293, C-187

www.mcadamsco.com

WALLBROOK LANDCO, LLC
3 KEEL STREET, SUITE 2
WRIGHTSVILLE BEACH, NORTH CAROLINA
28480-1709

WALLBROOK
CONSTRUCTION DRAWINGS
ROLESVILLE, NORTH CAROLINA

NORTH CAROLINA PROFESSIONAL SEAL 22630 ENGINEER WILLIAM T. O'DANIEL

Digitally signed by William T O'Daniel
Date: 2024.08.30 15:48:02-04'00'

REVISIONS

NO.	DATE	
1	09. 27. 2023	WALL CREEK DRIVE TIE-IN REVISIONS
2	11. 02. 2023	EW-400 REVISION
3	05. 10. 2024	UPDATING SCM B GRADING AND SCM A OUTLET
4	06. 06. 2024	SEWER MANHOLE REVISIONS
5	08. 30. 2024	UPDATED BUILDING FOOTPRINTS AND IMPERVIOUS AREA

PLAN INFORMATION

PROJECT NO.	CPR-19100
FILENAME	CPR19100-CD-EC-D1
CHECKED BY	WTO
DRAWN BY	---
SCALE	---
DATE	05. 22. 2023

SHEET

EROSION CONTROL DETAILS

C6.10

FINAL DRAWING - RELEASED FOR CONSTRUCTION

X:\Projects\CPR\CPR-19100\04-Production\Engineering\Site Plan-Construction Drawings\Current Drawings\CPR19100-CD-EC-D1.dwg, 8/29/2024 12:27:58 PM, Tommy Dabolt

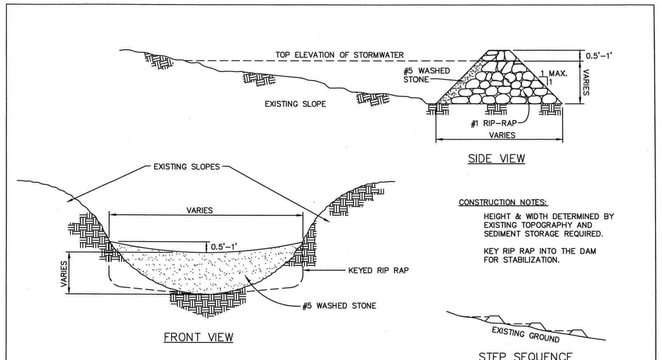

CONSTRUCTION NOTES:

HEIGHT & WIDTH DETERMINED BY EXISTING TOPOGRAPHY AND SEDIMENT STORAGE REQUIRED.

KEY RIP RAP INTO THE DAM FOR STABILIZATION.

NOTE: REMOVE SEDIMENT ACCUMULATION FROM BEHIND CHECK DAMS TO PREVENT DAMAGE TO CHANNEL VEGETATION. FLOW SHOULD BE MAINTAINED THROUGH THE DAM.

WAKE COUNTY NORTH CAROLINA

EFFECTIVE: 01/31/08

STANDARD CHECK DAM

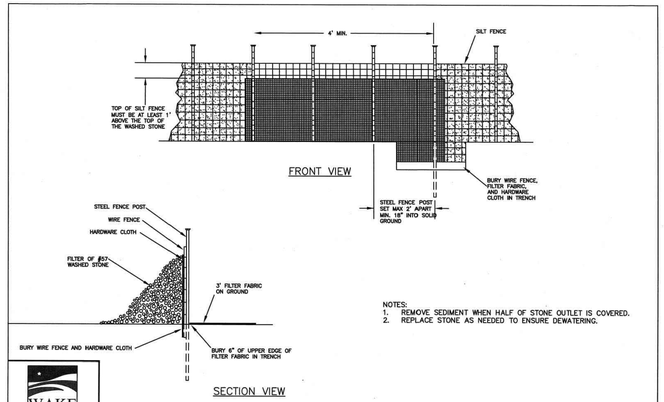

NOTES:
1. REMOVE SEDIMENT WHEN HALF OF STONE OUTLET IS COVERED.
2. REPLACE STONE AS NEEDED TO ENSURE DEWATERING.

WAKE COUNTY NORTH CAROLINA

EFFECTIVE: 01/31/08

STANDARD SILT FENCE OUTLET

NOTES:

1. CONSTRUCT THE ENTRANCE TO THE SLOPE DRAIN OF A STANDARD FLARED-END SECTION OF PIPE WITH A MINIMUM 6-INCH METAL TOE PLATE (CROSS-SECTION VIEW). MAKE ALL FITTINGS WATERTIGHT. A STANDARD T-SECTION FITTING MAY ALSO BE USED AT THE INLET.

2. USE AN EARTHEN DIVERSION TO DIRECT SURFACE RUNOFF INTO THE TEMPORARY SLOPE DRAIN. MAKE THE HEIGHT OF THE BERM OVER THE DRAIN CONDUIT A MINIMUM OF 1.5 FT AND AT LEAST 8 INCHES HIGHER THAN THE ADJOINING BERM ON EITHER SIDE. THE LOWEST POINT OF THE DIVERSION BERM SHOULD BE A MINIMUM OF 1 FT ABOVE THE TOP OF THE DRAIN SO THAT DESIGN FLOW CAN FREELY ENTER THE PIPE.

3. PROTECT THE OUTLET OF THE SLOPE DRAIN FROM EROSION WITH RIPRAP DISSIPATOR.

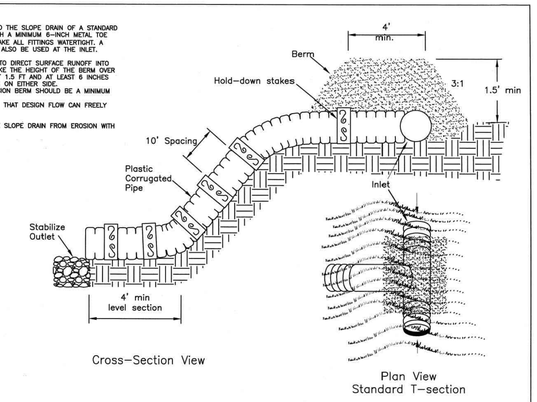

WAKE COUNTY NORTH CAROLINA

EFFECTIVE: 01/31/08

STANDARD TEMPORARY SLOPE DRAIN

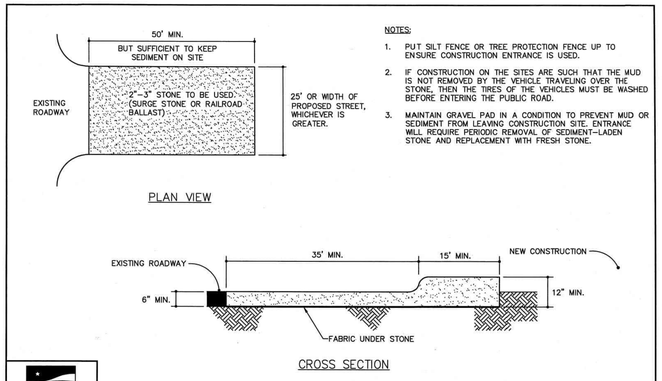

NOTES:

1. PUT SILT FENCE OR TREE PROTECTION FENCE UP TO ENSURE CONSTRUCTION ENTRANCE IS USED.
2. IF CONSTRUCTION ON THE SITES ARE SUCH THAT THE MUD IS NOT REMOVED BY THE VEHICLE TRAVELING OVER THE STONE, THEN THE TIRES OF THE VEHICLES MUST BE WASHED BEFORE ENTERING THE PUBLIC ROAD.
3. MAINTAIN GRAVEL PAD IN A CONDITION TO PREVENT MUD OR SEDIMENT FROM LEAVING CONSTRUCTION SITE. ENTRANCE WILL REQUIRE PERIODIC REMOVAL OF SEDIMENT-LADEN STONE AND REPLACEMENT WITH FRESH STONE.

WAKE COUNTY NORTH CAROLINA

EFFECTIVE: 01/31/08

STANDARD CONSTRUCTION ENTRANCE

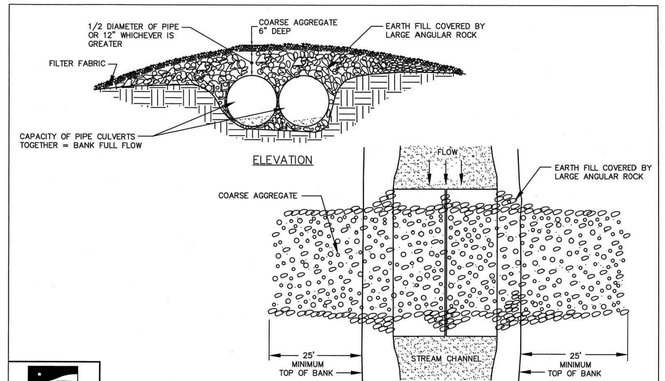

WAKE COUNTY NORTH CAROLINA

EFFECTIVE: 01/31/08

STANDARD TEMPORARY STREAM CROSSING

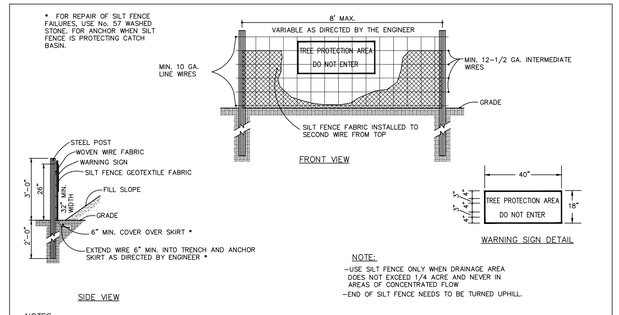

NOTE:
-USE SILT FENCE ONLY WHEN DRAINAGE AREA DOES NOT EXCEED 1/4 ACRE AND NEVER IN AREAS OF CONCENTRATED FLOW
-END OF SILT FENCE NEEDS TO BE TURNED UPHILL.

NOTES:
WARNING SIGNS TO BE MADE OF DURABLE, WEATHERPROOF MATERIAL.
LETTERS TO BE 3" HIGH MINIMUM, CLEARLY LEGIBLE AND SPACED AS DETAILED.
SIGNS SHALL BE PLACED AT 50' MAXIMUM INTERVALS.
PLACE A SIGN AT EACH END OF LINEAR TREE PROTECTION AND 50' ON CENTER THEREAFTER.
FOR TREE PROTECTION AREAS LESS THAN 200' IN PERIMETER, PROVIDE NO LESS THAN ONE SIGN PER PROTECTION AREA.
ATTACH SIGNS SECURELY TO FENCE POSTS AND FABRIC.
MAINTAIN TREE PROTECTION FENCE THROUGHOUT DURATION OF PROJECT.
ADDITIONAL SIGNS MAY BE REQURED BY CITY OF RALEIGH INSPECTIONS DEPARTMENT BASED ON ACTUAL FIELD CONDITIONS.
PLACE A SIGN AT EACH END OF LINEAR TREE PROTECTION AND 50' ON CENTER THEREAFTER.

STANDARD TEMPORARY SILT / TREE PROTECTION FENCE | 1A

McADAMS

The John R. McAdams Company, Inc.
621 Hillsborough Street
Suite 500
Raleigh, NC 27603

phone 919. 361. 5000
fax 919. 361. 2269
license number: C-0293, C-187

www.mcadamsco.com

WALLBROOK LANDCO, LLC
3 KEEL STREET, SUITE 2
WRIGHTSVILLE BEACH, NORTH CAROLINA
28480-1709

WALLBROOK
CONSTRUCTION DRAWINGS
ROLESVILLE, NORTH CAROLINA

NORTH CAROLINA PROFESSIONAL SEAL 22630 ENGINEER WILLIAM T. O'DANIEL

W.T. O'Daniel

Digitally signed by William T O'Daniel
Date: 2024.08.30 15:48:04-04'00'

REVISIONS

NO.	DATE	
1	09. 27. 2023	WALL CREEK DRIVE TIE-IN REVISIONS
2	11. 02. 2023	EW-400 REVISION
3	05. 10. 2024	UPDATING SCM B GRADING AND SCM A OUTLET
4	06. 06. 2024	SEWER MANHOLE REVISIONS
5	08. 30. 2024	UPDATED BUILDING FOOTPRINTS AND IMPERVIOUS AREA

PLAN INFORMATION

PROJECT NO.	CPR-19100
FILENAME	CPR19100-CD-EC-D1
CHECKED BY	WTO
DRAWN BY	---
SCALE	---
DATE	05. 22. 2023

SHEET

EROSION CONTROL DETAILS

C6.11

FINAL DRAWING - RELEASED FOR CONSTRUCTION

X:\Projects\CPR\CPR-19100\04-Production\Engineering\Site Plan-Construction Drawings\Current Drawing\CPR19100-CD-EC-D1.dwg, 8/29/2024 12:28:18 PM, Tommy Dalbolt

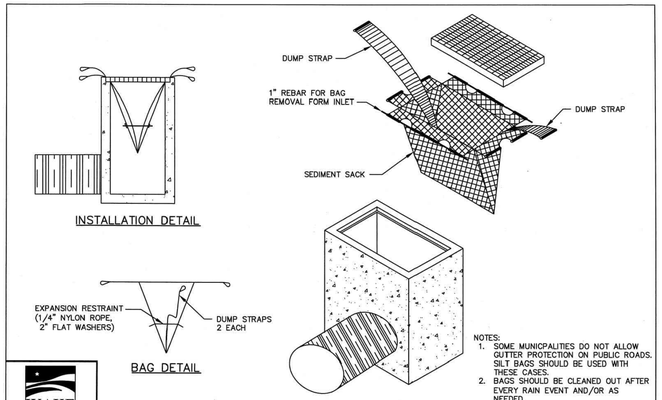

NOTES:
1. SOME MUNICIPALITIES DO NOT ALLOW GUTTER PROTECTION ON PUBLIC ROADS. SILT BAGS SHOULD BE USED WITH THESE CASES.
2. BAGS SHOULD BE CLEANED OUT AFTER EVERY RAIN EVENT AND/OR AS NEEDED.

WAKE COUNTY NORTH CAROLINA

EFFECTIVE: 01/31/08

STANDARD SILT BAG - INLET SEDIMENT CONTROL DEVICE

Channel Installation

The following channel installation guide outlines our general recommendations for installing Tensar RollMax™ temporary and/or permanent RECPs in high flow applications. Consult the peg pattern guide (Fig 1) for fastener spacing recommendations based on the channel severity. Drawings not to scale.

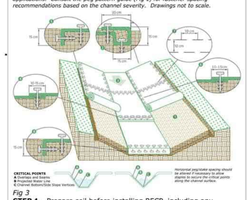
Anchor Trench
Check Dam
Anchor Trench
Check Dam
Anchor Trench
Check Dam

GROUND STABILIZATION AND MATERIALS HANDLING PRACTICES FOR COMPLIANCE WITH THE NCG01 CONSTRUCTION GENERAL PERMIT

Implementing the details and specifications on this plan sheet will result in the construction activity being considered compliant with the Ground Stabilization and Materials Handling sections of the NCG01 Construction General Permit (Sections E and F, respectively). The permittee shall comply with the Erosion and Sediment Control plan approved by the delegated authority having jurisdiction. All details and specifications shown on this sheet may not apply depending on site conditions and the delegated authority having jurisdiction.

SECTION E: GROUND STABILIZATION

Required Ground Stabilization Timeframes

Site Area Description	Stabilize within this many calendar days after ceasing land disturbance	Timeframe variations
(a) Perimeter dikes, swales, ditches, and perimeter slopes	7	None
(b) High Quality Water (HQW) Zones	7	None
(c) Slopes steeper than 3:1	7	If slopes are 10' or less in length and are not steeper than 2:1, 14 days are allowed
(d) Slopes 3:1 to 4:1	14	-7 days for slopes greater than 50' in length and with slopes steeper than 4:1 -7 days for perimeter dikes, swales, ditches, perimeter slopes and HQW Zones -10 days for Falls Lake Watershed
(e) Areas with slopes flatter than 4:1	14	-7 days for perimeter dikes, swales, ditches, perimeter slopes and HQW Zones -10 days for Falls Lake Watershed unless there is zero slope

Note: After the permanent cessation of construction activities, any areas with temporary ground stabilization shall be converted to permanent ground stabilization as soon as practicable but in no case longer than 90 calendar days after the last land disturbing activity. Temporary ground stabilization shall be maintained in a manner to render the surface stable against accelerated erosion until permanent ground stabilization is achieved.

GROUND STABILIZATION SPECIFICATION

Stabilize the ground sufficiently so that rain will not dislodge the soil. Use one of the techniques in the table below:

Temporary Stabilization	Permanent Stabilization
• Temporary grass seed covered with straw or other mulches and tackifiers • Hydroseeding • Rolled erosion control products with or without temporary grass seed • Appropriately applied straw or other mulch • Plastic sheeting	• Permanent grass seed covered with straw or other mulches and tackifiers • Geotextile fabrics such as permanent soil reinforcement matting • Hydroseeding • Shrubs or other permanent plantings covered with mulch • Uniform and evenly distributed ground cover sufficient to restrain erosion • Structural methods such as concrete, asphalt or retaining walls • Rolled erosion control products with grass seed

POLYACRYLAMIDES (PAMS) AND FLOCCULANTS

1. Select flocculants that are appropriate for the soils being exposed during construction, selecting from the *NC DWR List of Approved PAMS/Flocculants*.
2. Apply flocculants at or before the inlets to Erosion and Sediment Control Measures.
3. Apply flocculants at the concentrations specified in the *NC DWR List of Approved PAMS/Flocculants* and in accordance with the manufacturer's instructions.
4. Provide ponding area for containment of treated Stormwater before discharging offsite.
5. Store flocculants in leak-proof containers that are kept under storm-resistant cover or surrounded by secondary containment structures.

EQUIPMENT AND VEHICLE MAINTENANCE

1. Maintain vehicles and equipment to prevent discharge of fluids.
2. Provide drip pans under any stored equipment.
3. Identify leaks and repair as soon as feasible, or remove leaking equipment from the project.
4. Collect all spent fluids, store in separate containers and properly dispose as hazardous waste (recycle when possible).
5. Remove leaking vehicles and construction equipment from service until the problem has been corrected.
6. Bring used fuels, lubricants, coolants, hydraulic fluids and other petroleum products to a recycling or disposal center that handles these materials.

LITTER, BUILDING MATERIAL AND LAND CLEARING WASTE

1. Never bury or burn waste. Place litter and debris in approved waste containers.
2. Provide a sufficient number and size of waste containers (e.g dumpster, trash receptacle) on site to contain construction and domestic wastes.
3. Locate waste containers at least 50 feet away from storm drain inlets and surface waters unless no other alternatives are reasonably available.
4. Locate waste containers on areas that do not receive substantial amounts of runoff from upland areas and does not drain directly to a storm drain, stream or wetland.
5. Cover waste containers at the end of each workday and before storm events or provide secondary containment. Repair or replace damaged waste containers.
6. Anchor all lightweight items in waste containers during times of high winds.
7. Empty waste containers as needed to prevent overflow. Clean up immediately if containers overflow.
8. Dispose waste off-site at an approved disposal facility.
9. On business days, clean up and dispose of waste in designated waste containers.

PAINT AND OTHER LIQUID WASTE

1. Do not dump paint and other liquid waste into storm drains, streams or wetlands.
2. Locate paint washouts at least 50 feet away from storm drain inlets and surface waters unless no other alternatives are reasonably available.
3. Contain liquid wastes in a controlled area.
4. Containment must be labeled, sized and placed appropriately for the needs of site.
5. Prevent the discharge of soaps, solvents, detergents and other liquid wastes from construction sites.

PORTABLE TOILETS

1. Install portable toilets on level ground, at least 50 feet away from storm drains, streams or wetlands unless there is no alternative reasonably available. If 50 foot offset is not attainable, provide relocation of portable toilet behind silt fence or place on a gravel pad and surround with sand bags.
2. Provide staking or anchoring of portable toilets during periods of high winds or in high foot traffic areas.
3. Monitor portable toilets for leaking and properly dispose of any leaked material. Utilize a licensed sanitary waste hauler to remove leaking portable toilets and replace with properly operating unit.

EARTHEN STOCKPILE MANAGEMENT

1. Show stockpile locations on plans. Locate earthen-material stockpile areas at least 50 feet away from storm drain inlets, sediment basins, perimeter sediment controls and surface waters unless it can be shown no other alternatives are reasonably available.
2. Protect stockpile with silt fence installed along toe of slope with a minimum offset of five feet from the toe of stockpile.
3. Provide stable stone access point when feasible.
4. Stabilize stockpile within the timeframes provided on this sheet and in accordance with the approved plan and any additional requirements. Soil stabilization is defined as vegetative, physical or chemical coverage techniques that will restrain accelerated erosion on disturbed soils for temporary or permanent control needs.

NORTH CAROLINA Environmental Quality

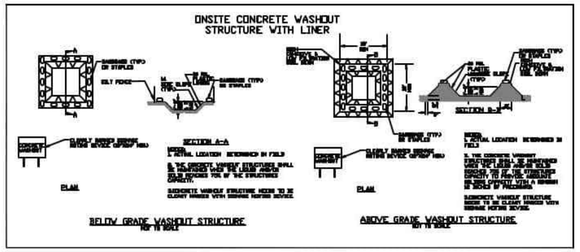

CONCRETE WASHOUTS

1. Do not discharge concrete or cement slurry from the site.
2. Dispose of, or recycle settled, hardened concrete residue in accordance with local and state solid waste regulations and at an approved facility.
3. Manage washout from mortar mixers in accordance with the above item and in addition place the mixer and associated materials on impervious barrier and within lot perimeter silt fence.
4. Install temporary concrete washouts per local requirements, where applicable. If an alternate method or product is to be used, contact your approval authority for review and approval. If local standard details are not available, use one of the two types of temporary concrete washouts provided on this detail.
5. Do not use concrete washouts for dewatering or storing defective curb or sidewalk sections. Stormwater accumulated within the washout may not be pumped into or discharged to the storm drain system or receiving surface waters. Liquid waste must be pumped out and removed from project.
6. Locate washouts at least 50 feet from storm drain inlets and surface waters unless it can be shown that no other alternatives are reasonably available. At a minimum, install protection of storm drain inlet(s) closest to the washout which could receive spills or overflow.
7. Locate washouts in an easily accessible area, on level ground and install a stone entrance pad in front of the washout. Additional controls may be required by the approving authority.
8. Install at least one sign directing concrete trucks to the washout within the project limits. Post signage on the washout itself to identify this location.
9. Remove leavings from the washout when at approximately 75% capacity to limit overflow events. Replace the tarp, sand bags or other temporary structural components when no longer functional. When utilizing alternative or proprietary products, follow manufacturer's instructions.
10. At the completion of the concrete work, remove remaining leavings and dispose of in an approved disposal facility. Fill pit, if applicable, and stabilize any disturbance caused by removal of washout.

HERBICIDES, PESTICIDES AND RODENTICIDES

1. Store and apply herbicides, pesticides and rodenticides in accordance with label restrictions.
2. Store herbicides, pesticides and rodenticides in their original containers with the label, which lists directions for use, ingredients and first aid steps in case of accidental poisoning.
3. Do not store herbicides, pesticides and rodenticides in areas where flooding is possible or where they may spill or leak into wells, stormwater drains, ground water or surface water. If a spill occurs, clean area immediately.
4. Do not stockpile these materials onsite.

HAZARDOUS AND TOXIC WASTE

1. Create designated hazardous waste collection areas on-site.
2. Place hazardous waste containers under cover or in secondary containment.
3. Do not store hazardous chemicals, drums or bagged materials directly on the ground.

For questions and assistance, please contact NCDEQ at 919-707-3639.

NCG01 GROUND STABILIZATION AND MATERIALS HANDLING

A-12

McADAMS
The John R. McAdams Company, Inc.
621 Hillsborough Street
Suite 500
Raleigh, NC 27603
phone 919. 361. 5000
fax 919. 361. 2269
license number: C-0293, C-187
www.mcadamsco.com

WALLBROOK LANDCO, LLC
3 KEEL STREET, SUITE 2
WRIGHTSVILLE BEACH, NORTH CAROLINA
28480-1709

WALLBROOK
CONSTRUCTION DRAWINGS
ROLESVILLE, NORTH CAROLINA

NORTH CAROLINA PROFESSIONAL SEAL 22630 ENGINEER WILLIAM T. O'DANIEL

W. T. O'Daniel
Digitally signed by William T O'Daniel
Date: 2024.08.30 15:48:07-04'00'

REVISIONS

NO.	DATE	
1	09. 27. 2023	WALL CREEK DRIVE TIE-IN REVISIONS
2	11. 02. 2023	EW-400 REVISION
3	05. 10. 2024	UPDATING SCM B GRADING AND SCM A OUTLET
4	06. 06. 2024	SEWER MANHOLE REVISIONS
5	08. 30. 2024	UPDATED BUILDING FOOTPRINTS AND IMPERVIOUS AREA

PLAN INFORMATION

PROJECT NO.	CPR-19100
FILENAME	CPR19100-CD-EC-D1
CHECKED BY	WTO
DRAWN BY	---
SCALE	---
DATE	05. 22. 2023

SHEET

EROSION CONTROL DETAILS

C6.13

FINAL DRAWING - RELEASED FOR CONSTRUCTION

X:\Projects\CPR\CPR-19100\04-Production\Engineering\Site Plan-Construction Drawings\Current Drawing\CPR19100-CD-EC-D1.dwg, 8/29/2024 12:29:28 PM, Tommy Dabolt

PART III
SELF-INSPECTION, RECORDKEEPING AND REPORTING

SECTION A: SELF-INSPECTION

Self-inspections are required during normal business hours in accordance with the table below. When adverse weather or site conditions would cause the safety of the inspection personnel to be in jeopardy, the inspection may be delayed until the next business day on which it is safe to perform the inspection. In addition, when a storm event of equal to or greater than 1.0 inch occurs outside of normal business hours, the self-inspection shall be performed upon the commencement of the next business day. Any time when inspections were delayed shall be noted in the Inspection Record.

Inspect	Frequency (during normal business hours)	Inspection records must include:
(1) Rain gauge maintained in good working order	Daily	Daily rainfall amounts. If no daily rain gauge observations are made during weekend or holiday periods, and no individual-day rainfall information is available, record the cumulative rain measurement for those un-attended days (and this will determine if a site inspection is needed). Days on which no rainfall occurred shall be recorded as "zero." The permittee may use another rain-monitoring device approved by the Division.
(2) E&SC Measures	At least once per 7 calendar days and within 24 hours of a rain event ≥ 1.0 inch in 24 hours	1. Identification of the measures inspected, 2. Date and time of the inspection, 3. Name of the person performing the inspection, 4. Indication of whether the measures were operating properly, 5. Description of maintenance needs for the measure, 6. Description, evidence, and date of corrective actions taken.
(3) Stormwater discharge outfalls (SDOs)	At least once per 7 calendar days and within 24 hours of a rain event ≥ 1.0 inch in 24 hours	1. Identification of the discharge outfalls inspected, 2. Date and time of the inspection, 3. Name of the person performing the inspection, 4. Evidence of indicators of stormwater pollution such as oil sheen, floating or suspended solids or discoloration, 5. Indication of visible sediment leaving the site, 6. Description, evidence, and date of corrective actions taken.
(4) Perimeter of site	At least once per 7 calendar days and within 24 hours of a rain event ≥ 1.0 inch in 24 hours	If visible sedimentation is found outside site limits, then a record of the following shall be made: 1. Actions taken to clean up or stabilize the sediment that has left the site limits, 2. Description, evidence, and date of corrective actions taken, and 3. An explanation as to the actions taken to control future releases.
(5) Streams or wetlands onsite or offsite (where accessible)	At least once per 7 calendar days and within 24 hours of a rain event ≥ 1.0 inch in 24 hours	If the stream or wetland has increased visible sedimentation or a stream has visible increased turbidity from the construction activity, then a record of the following shall be made: 1. Description, evidence and date of corrective actions taken, and 2. Records of the required reports to the appropriate Division Regional Office per Part III, Section C, Item (2)(a) of this permit.
(6) Ground stabilization measures	After each phase of grading	1. The phase of grading (installation of perimeter E&SC measures, clearing and grubbing, installation of storm drainage facilities, completion of all land-disturbing activity, construction or redevelopment, permanent ground cover). 2. Documentation that the required ground stabilization measures have been provided within the required timeframe or an assurance that they will be provided as soon as possible.

NOTE: The rain inspection resets the required 7 calendar day inspection requirement.

PART III
SELF-INSPECTION, RECORDKEEPING AND REPORTING

SECTION B: RECORDKEEPING

1. E&SC Plan Documentation

The approved E&SC plan as well as any approved deviation shall be kept on the site. The approved E&SC plan must be kept up-to-date throughout the coverage under this permit. The following items pertaining to the E&SC plan shall be kept on site and available for inspection at all times during normal business hours.

Item to Document	Documentation Requirements
(a) Each E&SC measure has been installed and does not significantly deviate from the locations, dimensions and relative elevations shown on the approved E&SC plan.	Initial and date each E&SC measure on a copy of the approved E&SC plan or complete, date and sign an inspection report that lists each E&SC measure shown on the approved E&SC plan. This documentation is required upon the initial installation of the E&SC measures or if the E&SC measures are modified after initial installation.
(b) A phase of grading has been completed.	Initial and date a copy of the approved E&SC plan or complete, date and sign an inspection report to indicate completion of the construction phase.
(c) Ground cover is located and installed in accordance with the approved E&SC plan.	Initial and date a copy of the approved E&SC plan or complete, date and sign an inspection report to indicate compliance with approved ground cover specifications.
(d) The maintenance ard repair requirements for all E&SC measures have been performed.	Complete, date and sign an inspection report.
(e) Corrective actions have been taken to E&SC measures.	Initial and date a copy of the approved E&SC plan or complete, date and sign an inspection report to indicate the completion of the corrective action.

2. Additional Documentation to be Kept on Site

In addition to the E&SC plan documents above, the following items shall be kept on the site and available for inspectors at all times during normal business hours, unless the Division provides a site-specific exemption based on unique site conditions that make this requirement not practical:

(a) This General Permit as well as the Certificate of Coverage, after it is received.

(b) Records of inspections made during the previous twelve months. The permittee shall record the required observations on the Inspection Record Form provided by the Division or a similar inspection form that includes all the required elements. Use of electronically-available records in lieu of the required paper copies will be allowed if shown to provide equal access and utility as the hard-copy records.

3. Documentation to be Retained for Three Years

All data used to complete the e-NOI and all inspection records shall be maintained for a period of three years after project completion and made available upon request. [40 CFR 122.41]

PART III
SELF-INSPECTION, RECORDKEEPING AND REPORTING

SECTION C: REPORTING

1. Occurrences that Must be Reported

Permittees shall report the following occurrences:

(a) Visible sediment deposition in a stream or wetland.

(b) Oil spills if:
- They are 25 gallons or more,
- They are less than 25 gallons but cannot be cleaned up within 24 hours,
- They cause sheen on surface waters (regardless of volume), or
- They are within 100 feet of surface waters (regardless of volume).

(c) Releases of hazardous substances in excess of reportable quantities under Section 311 of the Clean Water Act (Ref: 40 CFR 110.3 and 40 CFR 117.3) or Section 102 of CERCLA (Ref: 40 CFR 302.4) or G.S. 143-215.85.

(d) Anticipated bypasses and unanticipated bypasses.

(e) Noncompliance with the conditions of this permit that may endanger health or the environment.

2. Reporting Timeframes and Other Requirements

After a permittee becomes aware of an occurrence that must be reported, he shall contact the appropriate Division regional office within the timeframes and in accordance with the other requirements listed below. Occurrences outside normal business hours may also be reported to the Department's Environmental Emergency Center personnel at (800) 858-0368.

Occurrence	Reporting Timeframes (After Discovery) and Other Requirements
(a) Visible sediment deposition in a stream or wetland	• ***Within 24 hours***, an oral or electronic notification. • ***Within 7 calendar days***, a report that contains a description of the sediment and actions taken to address the cause of the deposition. Division staff may waive the requirement for a written report on a case-by-case basis. • If the stream is named on the NC 303(d) list as impaired for sediment-related causes, the permittee may be required to perform additional monitoring, inspections or apply more stringent practices if staff determine that additional requirements are needed to assure compliance with the federal or state impaired-waters conditions.
(b) Oil spills and release of hazardous substances per Item 1(b)-(c) above	• ***Within 24 hours***, an oral or electronic notification. The notification shall include information about the date, time, nature, volume and location of the spill or release.
(c) Anticipated bypasses [40 CFR 122.41(m)(3)]	• ***A report at least ten days before the date of the bypass, if possible***. The report shall include an evaluation of the anticipated quality and effect of the bypass.
(d) Unanticipated bypasses [40 CFR 122.41(m)(3)]	• ***Within 24 hours***, an oral or electronic notification. • ***Within 7 calendar days,*** a report that includes an evaluation of the quality and effect of the bypass.
(e) Noncompliance with the conditions of this permit that may endanger health or the environment[40 CFR 122.41(l)(7)]	• ***Within 24 hours***, an oral or electronic notification. • ***Within 7 calendar days***, a report that contains a description of the noncompliance, and its causes; the period of noncompliance, including exact dates and times, and if the noncompliance has not been corrected, the anticipated time noncompliance is expected to continue; and steps taken or planned to reduce, eliminate, and prevent reoccurrence of the noncompliance. [40 CFR 122.41(l)(6). • Division staff may waive the requirement for a written report on a case-by-case basis.

PART II, SECTION G, ITEM (4)
DRAW DOWN OF SEDIMENT BASINS FOR MAINTENANCE OR CLOSE OUT

Sediment basins and traps that receive runoff from drainage areas of one acre or more shall use outlet structures that withdraw water from the surface when these devices need to be drawn down for maintenance or close out unless this is infeasible. The circumstances in which it is not feasible to withdraw water from the surface shall be rare (for example, times with extended cold weather). Non-surface withdrawals from sediment basins shall be allowed only when all of the following criteria have been met:

(a) The E&SC plan authority has been provided with documentation of the non-surface withdrawal and the specific time periods or conditions in which it will occur. The non-surface withdrawal shall not commence until the E&SC plan authority has approved these items,
(b) The non-surface withdrawal has been reported as an anticipated bypass in accordance with Part III, Section C, Item (2)(c) and (d) of this permit,
(c) Dewatering discharges are treated with controls to minimize discharges of pollutants from stormwater that is removed from the sediment basin. Examples of appropriate controls include properly sited, designed and maintained dewatering tanks, weir tanks, and filtration systems,
(d) Vegetated, upland areas of the sites or a properly designed stone pad is used to the extent feasible at the outlet of the dewatering treatment devices described in Item (c) above,
(e) Velocity dissipation devices such as check dams, sediment traps, and riprap are provided at the discharge points of all dewatering devices, and
(f) Sediment removed from the dewatering treatment devices described in Item (c) above is disposed of in a manner that does not cause deposition of sediment into waters of the United States.

NORTH CAROLINA Environmental Quality

For questions and assistance, please contact NCDEQ at 919-707-3639.

NCG01 SELF-INSPECTION, RECORDKEEPING AND REPORTING

A-13

MCADAMS
The John R. McAdams Company, Inc.
621 Hillsborough Street
Suite 500
Raleigh, NC 27603
phone 919. 361. 5000
fax 919. 361. 2269
license number: C-0293, C-187
www.mcadamsco.com

WALLBROOK LANDCO, LLC
3 KEEL STREET, SUITE 2
WRIGHTSVILLE BEACH, NORTH CAROLINA
28480-1709

WALLBROOK
CONSTRUCTION DRAWINGS
ROLESVILLE, NORTH CAROLINA

NORTH CAROLINA PROFESSIONAL SEAL 22630 ENGINEER WILLIAM T. O'DANIEL

W. T. O'Daniel
Digitally signed by William T O'Daniel
Date: 2024.08.30 15:48:08-04'00'

REVISIONS

NO.	DATE	
1	09. 27. 2023	WALL CREEK DRIVE TIE-IN REVISIONS
2	11. 02. 2023	EW-400 REVISION
3	05. 10. 2024	UPDATING SCM B GRADING AND SCM A OUTLET
4	06. 06. 2024	SEWER MANHOLE REVISIONS
5	08. 30. 2024	UPDATED BUILDING FOOTPRINTS AND IMPERVIOUS AREA

PLAN INFORMATION

PROJECT NO.	CPR-19100
FILENAME	CPR19100-CD-EC-D1
CHECKED BY	WTO
DRAWN BY	---
SCALE	---
DATE	05. 22. 2023

SHEET

EROSION CONTROL DETAILS

C6.14

FINAL DRAWING - RELEASED FOR CONSTRUCTION

X:\Projects\CPR\CPR-19100\04-Production\Engineering\Site Plan-Construction Drawings\Current Drawing\CPR19100-CD-EC-D1.dwg, 8/29/2024 12:30:53 PM, Tommy Dabolt

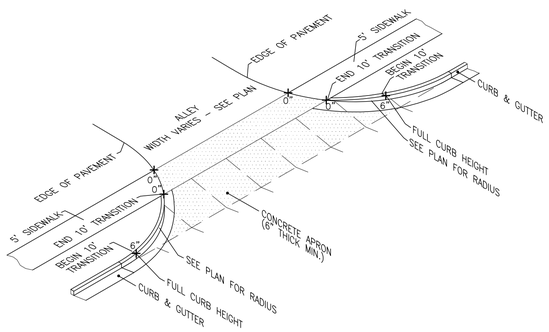

RESIDENTIAL ALLEY ENTRANCE DETAIL

N.T.S.

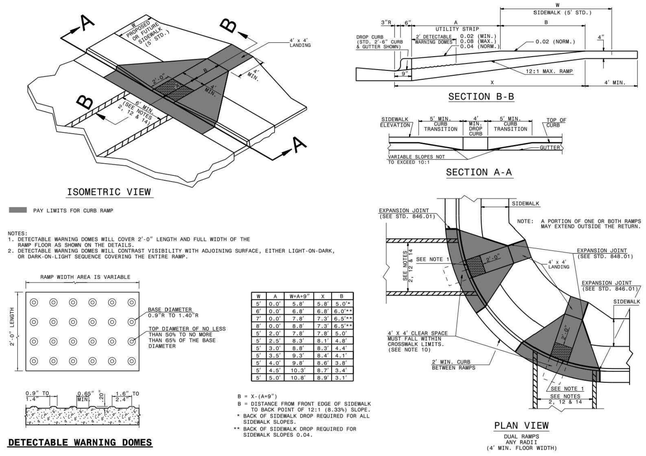

NOTES:
1. DETECTABLE WARNING DOMES WILL COVER 2'-0" LENGTH AND FULL WIDTH OF THE RAMP FLOOR AS SHOWN ON THE DETAILS.
2. DETECTABLE WARNING DOMES WILL CONTRAST VISIBILITY WITH ADJOISING SURFACE, EITHER LIGHT-ON-DARK, OR DARK-ON-LIGHT SEQUENCE COVERING THE ENTIRE RAMP.

W	A	W+A-9"	X	B
4'	0.0'	5.8'	5.8'	5.0'*
6'	0.0'	6.8'	6.8'	6.0'**
7'	0.0'	7.8'	7.3'	6.5'**
8'	0.0'	8.8'	7.3'	6.5'**
4'	2.0'	7.8'	7.8'	5.0'
5'	2.5'	8.3'	8.1'	4.8'
5'	3.0'	8.8'	8.3'	4.4'
5'	3.5'	9.3'	8.4'	4.1'
5'	4.0'	9.8'	8.6'	3.8'
5'	4.5'	10.3'	8.7'	3.4'
5'	5.0'	10.8'	8.9'	3.1'

B = X-(A+9")
B = DISTANCE FROM FRONT EDGE OF SIDEWALK TO BACK POINT OF 12:1 (8.33%) SLOPE.
* BACK OF SIDEWALK DROP REQUIRED FOR ALL SIDEWALK SLOPES.
** BACK OF SIDEWALK DROP REQUIRED FOR SIDEWALK SLOPES 0.04.

DETECTABLE WARNING DOMES

1-18 STATE OF NORTH CAROLINA DEPT. OF TRANSPORTATION DIVISION OF HIGHWAYS RALEIGH, N.C.

ROADWAY STANDARD DRAWING FOR
CURB RAMP
PROPOSED CURB AND GUTTER

SHEET 1 OF 3
848.05

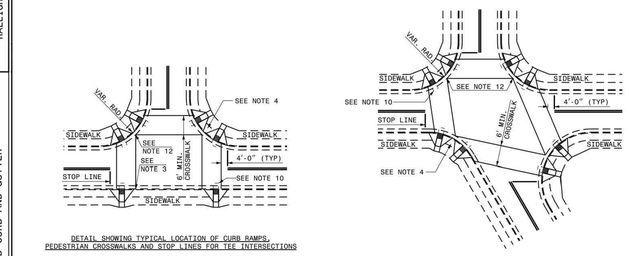

DETAIL SHOWING TYPICAL LOCATION OF CURB RAMPS, PEDESTRIAN CROSSWALKS AND STOP LINES FOR TEE INTERSECTIONS

DETAIL SHOWING TYPICAL LOCATION OF CURB RAMPS, PEDESTRIAN CROSSWALKS AND STOP LINES

ROADWAY PLAN SYMBOL
CR
FOR PROPOSED CURB RAMP

PROPOSED CURB RAMP W/ LANDING
PROPOSED OR FUTURE SIDEWALK

ALLOWABLE LOCATIONS
DUAL RAMP RADII.....ANY

1-18 STATE OF NORTH CAROLINA DEPT. OF TRANSPORTATION DIVISION OF HIGHWAYS RALEIGH, N.C.

ROADWAY STANDARD DRAWING FOR
CURB RAMP
PROPOSED CURB AND GUTTER

SHEET 2 OF 3
848.05

McADAMS

The John R. McAdams Company, Inc.
621 Hillsborough Street
Suite 500
Raleigh, NC 27603

phone 919. 361. 5000
fax 919. 261. 2269
license number: C-0293, C-187

www.mcadamsco.com

WALLBROOK LANDCO, LLC
3 KEEL STREET, SUITE 2
WRIGHTSVILLE BEACH, NORTH CAROLINA
28480-1709

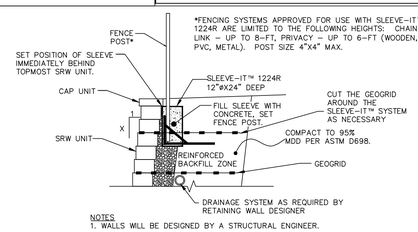

*FENCING SYSTEMS APPROVED FOR USE WITH SLEEVE-IT™ 1224R ARE LIMITED TO THE FOLLOWING HEIGHTS: CHAIN LINK – UP TO 8-FT, PRIVACY – UP TO 6-FT (WOODEN, PVC, METAL). POST SIZE 4"X4" MAX.

NOTES
1. WALLS WILL BE DESIGNED BY A STRUCTURAL ENGINEER.
2. WALL COLOR TO BE EARTH TONE OR GRAY.

INTERLOCKING BLOCK WALL WITH FENCE
(SLEEVE-IT™ OR APPROVED EQUAL)

N.T.S.

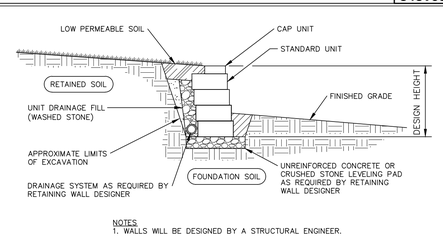

NOTES
1. WALLS WILL BE DESIGNED BY A STRUCTURAL ENGINEER.
2. WALL COLOR TO BE EARTH TONE OR GRAY.

INTERLOCKING BLOCK WALL

N.T.S.

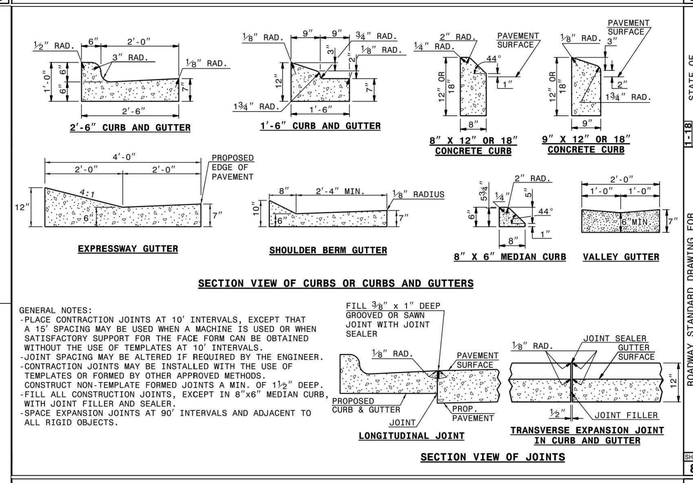

SECTION VIEW OF CURBS OR CURBS AND GUTTERS

GENERAL NOTES:
- PLACE CONTRACTION JOINTS AT 10' INTERVALS, EXCEPT THAT A 15' SPACING MAY BE USED WHEN A MACHINE IS USED OR WHEN SATISFACTORY SUPPORT FOR THE FACE FORM CAN BE OBTAINED WITHOUT THE USE OF TEMPLATES AT 10' INTERVALS.
- JOINT SPACING MAY BE ALTERED IF REQUIRED BY THE ENGINEER.
- CONTRACTION JOINTS MAY BE INSTALLED WITH THE USE OF TEMPLATES OR FORMED BY OTHER APPROVED METHODS. CONSTRUCT NON-TEMPLATE FORMED JOINTS A MIN. OF 1½" DEEP.
- FILL ALL CONSTRUCTION JOINTS, EXCEPT IN 8"x6" MEDIAN CURB, WITH JOINT FILLER AND SEALER.
- SPACE EXPANSION JOINTS AT 90' INTERVALS AND ADJACENT TO ALL RIGID OBJECTS.

LONGITUDINAL JOINT

TRANSVERSE EXPANSION JOINT IN CURB AND GUTTER

SECTION VIEW OF JOINTS

1-18 STATE OF NORTH CAROLINA DEPT. OF TRANSPORTATION DIVISION OF HIGHWAYS RALEIGH, N.C.

ROADWAY STANDARD DRAWING FOR
CONCRETE CURB, GUTTER AND CURB & GUTTER

SHEET 1 OF 3
846.01

WALLBROOK
CONSTRUCTION DRAWINGS
ROLESVILLE, NORTH CAROLINA

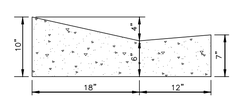

NOTES:
1. 10' MAXIMUM BETWEEN DUMMY JOINTS. 15' MAXIMUM BETWEEN DUMMY JOINTS ON MACHINE POURS.
2. 1/2" EXPANSION JOINT EVERY 50'.
3. 3000 PSI CONCRETE MINIMUM, 4" SLUMP MAXIMUM.
4. LIQUID MEMBRANE CURING COMPOUND SHALL MEET THE REQUIREMENTS OF SECTION 1026-2 OF NCDOT STANDARDS AND SPECIFICATIONS FOR ROADS AND STRUCTURES.
5. ALL CONSTRUCTION JOINTS SHALL BE FILLED WITH FILLER AND SEALER IN ACCORDANCE WITH NCDOT ROADWAY STANDARD DETAIL 846.01. THE JOINT MATERIAL SHALL CONFORM TO SECTION 1028-2 OF THE NCDOT STANDARDS AND SPECIFICATIONS FOR ROADS AND STRUCTURES.
6. REFER TO NCDOT DETAIL 846.01 FOR CURB AND GUTTER SUPERELEVATION RATES.

30" VALLEY TYPE GUTTER

N.T.S.

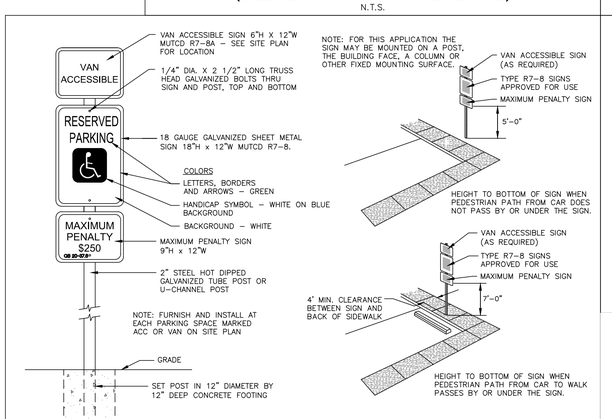

ACCESSIBLE PARKING SPACE SIGN

N.T.S.

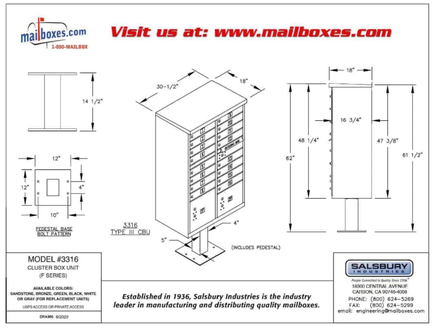

NOTES:
1. CONSTRUCT THE RAMP SURFACE TO BE STABLE, FIRM, AND SLIP RESISTANT. CONSTRUCT THE CURB RAMP TYPE AS SHOWN IN THE PAVEMENT MARKING PLANS OR AS DIRECTED BY THE ENGINEER.
2. LOCATE CURB RAMPS AND PLACE PEDESTRIAN CROSSWALK MARKINGS AS SHOWN IN THE PAVEMENT MARKING PLANS. WHEN FIELD ADJUSTMENTS REQUIRE MOVING CURB RAMPS OR MARKINGS AS SHOWN, CONTACT THE SIGNING AND DELINEATION UNIT OR LOCATE AS DIRECTED BY THE ENGINEER.
3. COORDINATE THE CURB RAMP AND THE PEDESTRIAN CROSSWALK MARKINGS SO A 4'x4' CLEAR SPACE AT THE BASE OF THE CURB RAMP WILL FALL WITHIN THE PEDESTRIAN CROSSWALK LINES.
4. SET BACK DISTANCE FROM INSIDE CROSSWALK MARKING TO NEAREST EDGE OF TRAVEL LANE IS 4' MINIMUM.
5. REFER TO THE PAVEMENT MARKING PLANS FOR STOP BAR LOCATIONS AT SIGNALIZED INTERSECTIONS. IF A PAVEMENT MARKING PLAN IS NOT PROVIDED, CONTACT THE SIGNAL DESIGN SECTION FOR THE STOP BAR LOCATIONS OR LOCATE AS DIRECTED BY THE ENGINEER.
6. TERMINATE PARKING A MINIMUM OF 20' BACK OF A PEDESTRIAN CROSSWALK.
7. CONSTRUCT CURB RAMPS A MINIMUM OF 4' WIDE.
8. CONSTRUCT THE RUNNING SLOPE OF THE RAMP 8.33% MAXIMUM.
9. ALLOWABLE CROSS SLOPE ON SIDEWALKS AND CURB RAMPS WILL BE 2% MAXIMUM.
10. CONSTRUCT THE SIDE FLARE SLOPE A MAXIMUM OF 10% MEASURED ALONG THE CURB LINE.
11. CONSTRUCT THE COUNTER SLOPE OF THE GUTTER OR STREET AT THE BASE OF THE CURB RAMP A MAXIMUM OF 5% AND MAINTAIN A SMOOTH TRANSITION.
12. CONSTRUCT LANDINGS FOR SIDEWALK A MINIMUM OF 4'x4' WITH A MAXIMUM SLOPE OF 2% IN ANY DIRECTION. CONSTRUCT LANDINGS FOR MEDIAN ISLANDS A MINIMUM OF 5'x5' WITH A MAXIMUM SLOPE OF 2% IN ANY DIRECTION.
13. TO USE A MEDIAN ISLAND AS A PEDESTRIAN REFUGE AREA, MEDIAN ISLANDS WILL BE A MINIMUM OF 6' WIDE. CONSTRUCT MEDIAN ISLANDS TO PROVIDE PASSAGE OVER OR THROUGHT THE ISLAND.
14. SMALL CHANNELIZATION ISLANDS THAT CAN NOT PROVIDE A 5'X5' LANDING AT THE TOP OF A RAMPS, WILL BE CUT THROUGH LEVEL WITH THE SURFACE STREET.
15. CURB RAMPS WITH RETURNED CURBS MAY BE USED ONLY WHERE PEDESTRIANS WOULD NOT NORMALLY WALK ACROSS THE RAMP. THE ADJACENT SURFACE IS PLANTING OR OTHER NON-WALKING SURFACE OR THE SIDE APPROACH IS SUBSTANTIALLY OBSTRUCTED.
16. PLACE A ½" EXPANSION JOINT WHERE THE CONCRETE CURB RAMP JOINS THE CURB AS SHOWN IN ROADWAY STANDARD DRAWING 848.01
17. PLACE ALL PEDESTRIAN PUSH BUTTON ACTUATORS AND CROSSING SIGNALS AS SHOWN IN THE PLANS OR AS SHOWN IN THE MUTCD.
18. CURB RAMPS THROUGH MEDIAN ISLANDS, SINGLE RAMPS AT DUAL CROSSWALKS OR LIMITED R/W SITUATIONS, WILL BE HANDLED BY SPECIAL DETAILS. CONTACT THE CONTRACT STANDARDS AND DEVELOPMENT UNIT FOR THE DETAILS OR FOR A SPECIAL DESIGN.

1-18 STATE OF NORTH CAROLINA DEPT. OF TRANSPORTATION DIVISION OF HIGHWAYS RALEIGH, N.C.

ROADWAY STANDARD DRAWING FOR
CURB RAMPS
NOTES

SHEET 3 OF 3
848.05

NORTH CAROLINA PROFESSIONAL SEAL 22630 ENGINEER WILLIAM T. O'DANIEL

W.T. O'Daniel

Digitally signed by William T O'Daniel
Date: 2024.08.30 15:48:10-04'00'

REVISIONS

NO.	DATE	
1	09. 27. 2023	WALL CREEK DRIVE TIE-IN REVISIONS
2	11. 02. 2023	EW-400 REVISION
3	05. 10. 2024	UPDATING SCM B GRADING AND SCM A OUTLET
4	06. 06. 2024	SEWER MANHOLE REVISIONS
5	08. 30. 2024	UPDATED BUILDING FOOTPRINTS AND IMPERVIOUS AREA

PLAN INFORMATION

PROJECT NO.	CPR-19100
FILENAME	CPR19100-CD-D1
CHECKED BY	WTO
DRAWN BY	---
SCALE	N.T.S.
DATE	05. 22. 2023

SHEET

SITE DETAILS

C8.00

FINAL DRAWING - RELEASED FOR CONSTRUCTION

X:\Projects\CPR\CPR-19100\04-Production\Engineering\Site Plan-Construction Drawings\Current Drawings\CPR19100-CD-D1.dwg, 8/29/2024 1:01:44 PM, Tommy Dabolt

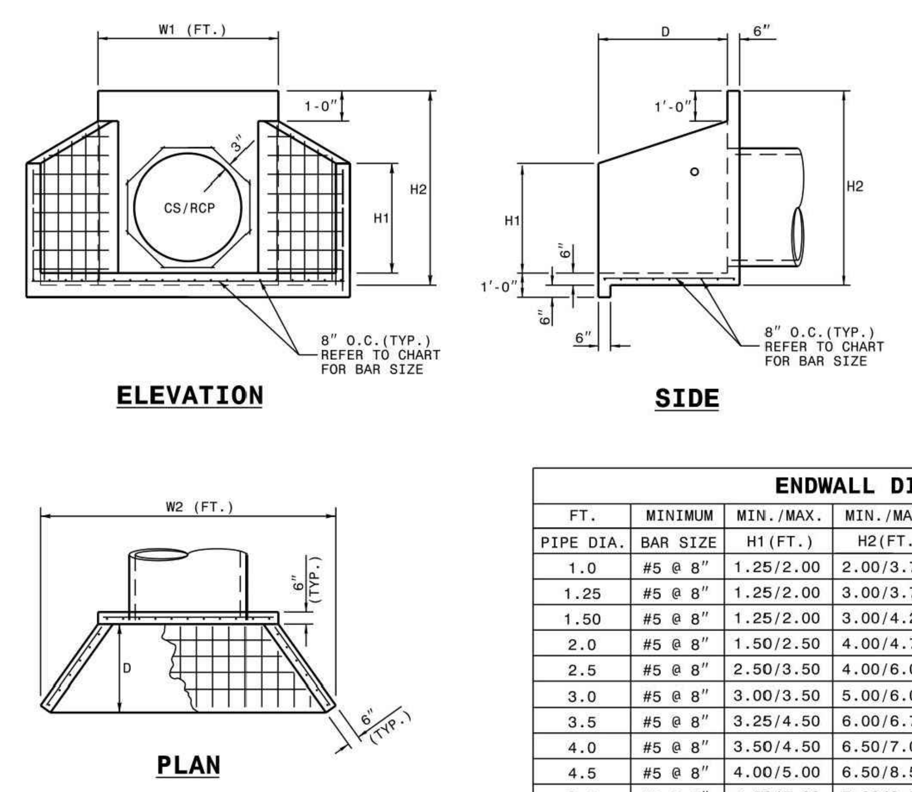

NOTES:

- THIS PRECAST ENDWALL MAY BE USED FOR THE FOLLOWING STANDARDS: 838.01, 838.11, 838.21, 838.27, 838.33, 838.39, 838.51, 838.57, 838.63 AND 838.69.
- INSTALL PRECAST ENDWALLS WITH WINGS AND PAY FOR IN ACCORDANCE WITH SPECIFICATION SECTION 838.
- USE 4000 PSI CONCRETE.
- PROVIDE ALL REINFORCING STEEL WHICH MEETS ASTM A615 FOR GRADE 60 AND WELDED WIRE FABRIC CONFORMING TO ASTM A185 WITH 2" MIN. CLEARANCE.
- PLACE LIFT HOLES OR PINS IN ACCORDANCE WITH OSHA STANDARD 1926.704.
- PIPE TO BE GROUTED INTO HEADWALL AT JOB SITE BY CONTRACTOR
- ALL ELEMENTS PRECAST TO MEET ASTM C913.
- WELDED WIRE FABRIC MAY BE SUBSTITUTED FOR REBAR AS LONG AS THE SAME AREA OF STEEL IS PROVIDED.
- CHAMFER ALL CORNERS 1" OR HAVE A RADIUS OF 1".

NOTE: THE MINIMUM BAR SIZE SHALL BE #5 BARS AT 8" CTS.THE CONTRACTOR WILL HAVE THE OPTION TO INCREASE THIS BAR SIZE AS NEEDED.

ENDWALL DIMENSIONS

FT.	MINIMUM	MIN./MAX.	MIN./MAX.	MIN./MAX.	MIN./MAX.	MIN./MAX.
PIPE DIA.	BAR SIZE	H1(FT.)	H2(FT.)	D (FT.)	W1	W2
1.0	#5 @ 8"	1.25/2.00	2.00/3.75	1.25/1.75	3.00/3.75	5.50/6.00
1.25	#5 @ 8"	1.25/2.00	3.00/3.75	1.25/2.00	3.50/3.75	6.50/6.75
1.50	#5 @ 8"	1.25/2.00	3.00/4.25	1.50/2.50	3.50/3.75	6.50/6.75
2.0	#5 @ 8"	1.50/2.50	4.00/4.75	1.75/2.50	4.00/4.25	7.50/8.25
2.5	#5 @ 8"	2.50/3.50	4.00/6.00	2.00/3.00	4.50/5.50	10.00/11.50
3.0	#5 @ 8"	3.00/3.50	5.00/6.00	2.75/3.50	5.25/5.75	11.50/11.75
3.5	#5 @ 8"	3.25/4.50	6.00/6.75	3.25/3.50	6.00/6.75	12.00/13.25
4.0	#5 @ 8"	3.50/4.50	6.50/7.00	3.25/3.50	6.50/6.75	13.00/13.25
4.5	#5 @ 8"	4.00/5.00	6.50/8.50	3.25/4.00	7.00/9.25	13.50/15.75
5.0	#5 @ 8"	4.50/5.00	7.00/8.50	3.25/4.00	7.25/9.25	13.75/15.75
5.5	#5 @ 8"	4.50/5.00	7.50/8.50	3.25/4.00	7.25/9.25	14.00/15.75
6.0	#5 @ 8"	4.50/5.00	7.50/8.50	3.25/4.00	7.75/9.25	14.75/16.75

STATE OF NORTH CAROLINA DEPT. OF TRANSPORTATION DIVISION OF HIGHWAYS RALEIGH, N.C.
1-18
ROADWAY STANDARD DRAWING FOR
PRECAST CONCRETE ENDWALL
FOR SINGLE 12" THRU 72" PIPE - 90° SKEW
SHEET 1 OF 1
838.80

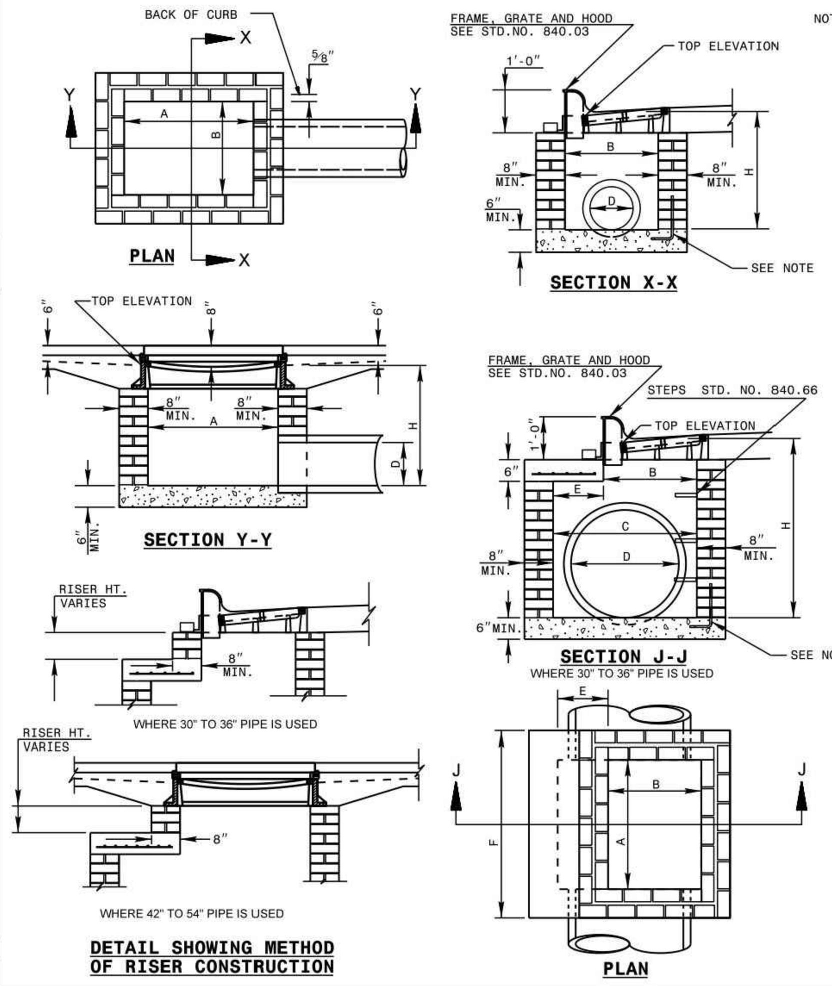

NOTES: MORTAR JOINTS ½" +/- ⅛" THICK.
USE CLASS "B" CONCRETE THROUGHOUT.
USE FORMS FOR CONSTRUCTION OF THE BOTTOM SLAB.
DEDUCT FOR PIPE(S) FROM TOTAL CU. YDS. OF BRICK MASONRY.
USE #4 BAR DOWELS AT 12" CENTERS FOR ALL PIPE SIZES.
PROVIDE ALL CATCH BASINS OVER 3'-6" IN DEPTH WITH STEPS 12" ON CENTER. USE STEPS WHICH COMPLY WITH STD. DRAWING 840.66.
USE TYPE "E", "F" AND "G" GRATES UNLESS OTHERWISE INDICATED.
USE BRICK OR CONCRETE BLOCK WHICH COMPLIES WITH THE REQUIREMENTS OF SECTION 840 OF THE STANDARD SPECIFICATIONS.
IF REINFORCED CONCRETE PIPE IS SET IN BOTTOM SLAB OF BOX, ADD TO SLAB AS SHOWN ON STD. NO. 840.00.
FOR 8'-0" IN HEIGHT OR LESS, USE 8" WALL. OVER 8'-0" IN HEIGHT, USE 12" WALL TO 6'-0" FROM TOP OF WALL AND 8" WALL FOR THE REMAINING 6'-0". QUANTITES TO BE ADJUSTED ACCORDINGLY.
CONSTRUCT WITH PIPE CROWNS MATCHING.
CHAMFER ALL EXPOSED CORNERS 1".
DRAWING NOT TO SCALE.

STATE OF NORTH CAROLINA DEPT. OF TRANSPORTATION DIVISION OF HIGHWAYS RALEIGH, N.C.
1-18
ROADWAY STANDARD DRAWING FOR
BRICK CATCH BASIN
12" THRU 54" PIPE
SHEET 1 OF 2
840.01

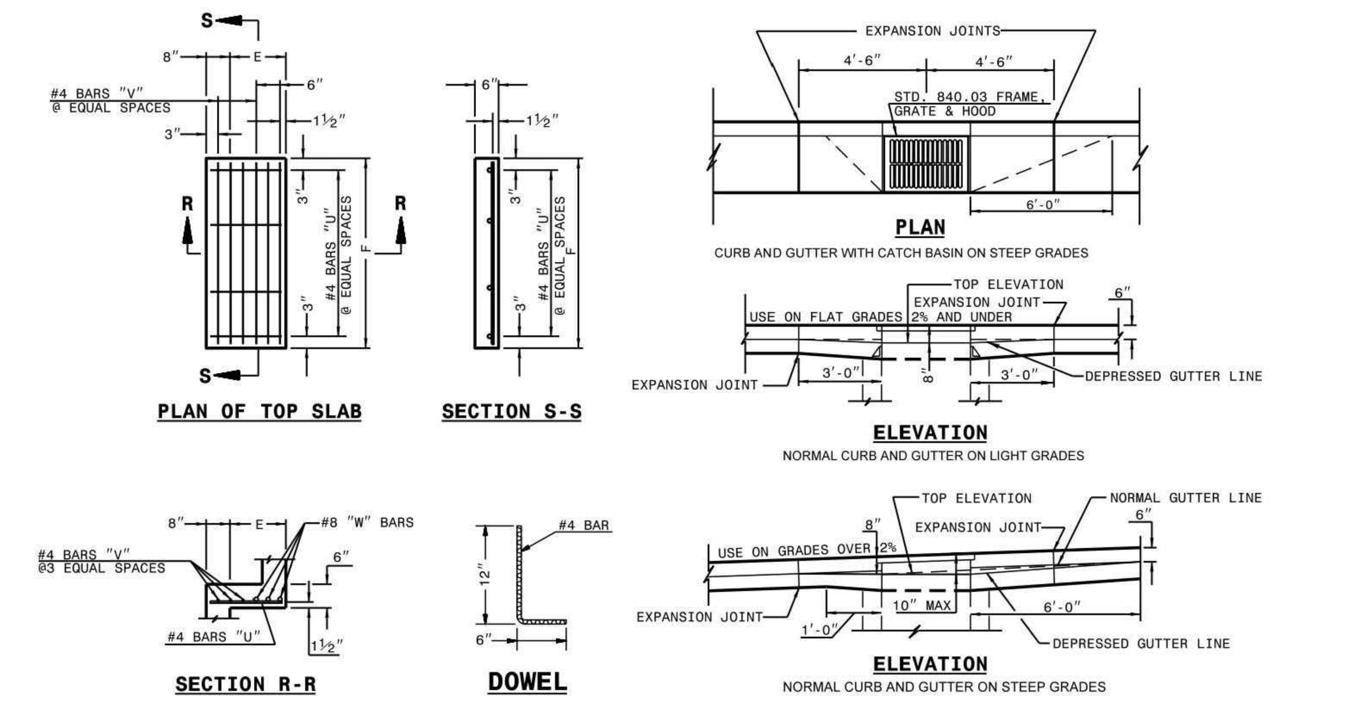

MINIMUM DIMENSIONS AND QUANTITIES FOR BRICK CATCH BASIN(BASED ON MIN. HEIGHT, H, WITH NO RISER)*

DIMENSIONS OF BOX AND PIPE						TOP SLAB DIMENSIONS		BARS-U		BARS-V		BARS-W		TOTAL LBS.	CU.YDS. CONC. IN BOX			BRICK MASONRY		DEDUCTIONS ONE PIPE	
PIPE	SPAN	WIDTH	WIDTH	SPAN	MIN. HEIGHT										TOP SLAB	BOTTOM SLAB	TOTAL CONC.	BRICK MSNR. IN WALLS	TOTAL BRICK AND CONCRETE		
D	A	B	C	G	H	E	F	NO.	LENGTH	NO.	LENGTH	NO.	LENGTH							C.M.	R.C.
12"	3'-0"	2'-2"	--	--	2'-9"	--	--	--	--	--	--	--	--	--	--	0.281	0.281	0.883	1.164	0.020	0.042
15"	3'-0"	2'-2"			3'-0"											0.281	0.281	0.963	1.244	0.031	0.047
18"	3'-0"	2'-2"			3'-3"											0.281	0.281	1.043	1.324	0.044	0.065
24"	3'-0"	2'-2"			3'-9"											0.281	0.281	1.204	1.485	0.078	0.121
30"	3'-0"	2'-2"	3'-4"		4'-3"	1'-2"	4'-4"	4	1'-6"	3	4'-1"	3	4'-1"	45	0.147	0.374	0.521	1.606	2.217	0.122	0.184
36"	3'-0"	2'-2"	3'-10"		4'-9"	1'-8"	4'-4"	4	2'-0"	4	4'-1"	3	4'-1"	49	0.187	0.415	0.602	1.914	2.516	0.176	0.261
42"	3'-0"	2'-2"		4'-5"	5'-3"	1'-5"	3'-6"	4	1'-9"	3	3'-3"	3	3'-3"	38	0.135	0.373	0.508	2.152	2.660	0.240	0.371
48"	3'-0"	2'-2"		5'-0"	5'-9"	2'-0"	3'-6"	4	2'-6"	4	3'-3"	3	3'-3"	41	0.173	0.410	0.583	2.415	2.998	0.313	0.477
54"	3'-0"	2'-2"		5'-7"	6'-3"	2'-7"	3'-6"	4	3'-0"	6	3'-3"	3	3'-3"	47	0.211	0.448	0.659	2.806	3.465	0.396	0.595

* RISER HAS .321 CUBIC YARDS OF BRICK MASONRY PER FOOT HEIGHT

STATE OF NORTH CAROLINA DEPT. OF TRANSPORTATION DIVISION OF HIGHWAYS RALEIGH, N.C.
1-18
ROADWAY STANDARD DRAWING FOR
BRICK CATCH BASIN
12" THRU 54" PIPE
SHEET 2 OF 2
840.01

NOTE: USE TYPE "E", "F" AND "G" GRATE UNLESS OTHERWISE NOTED.

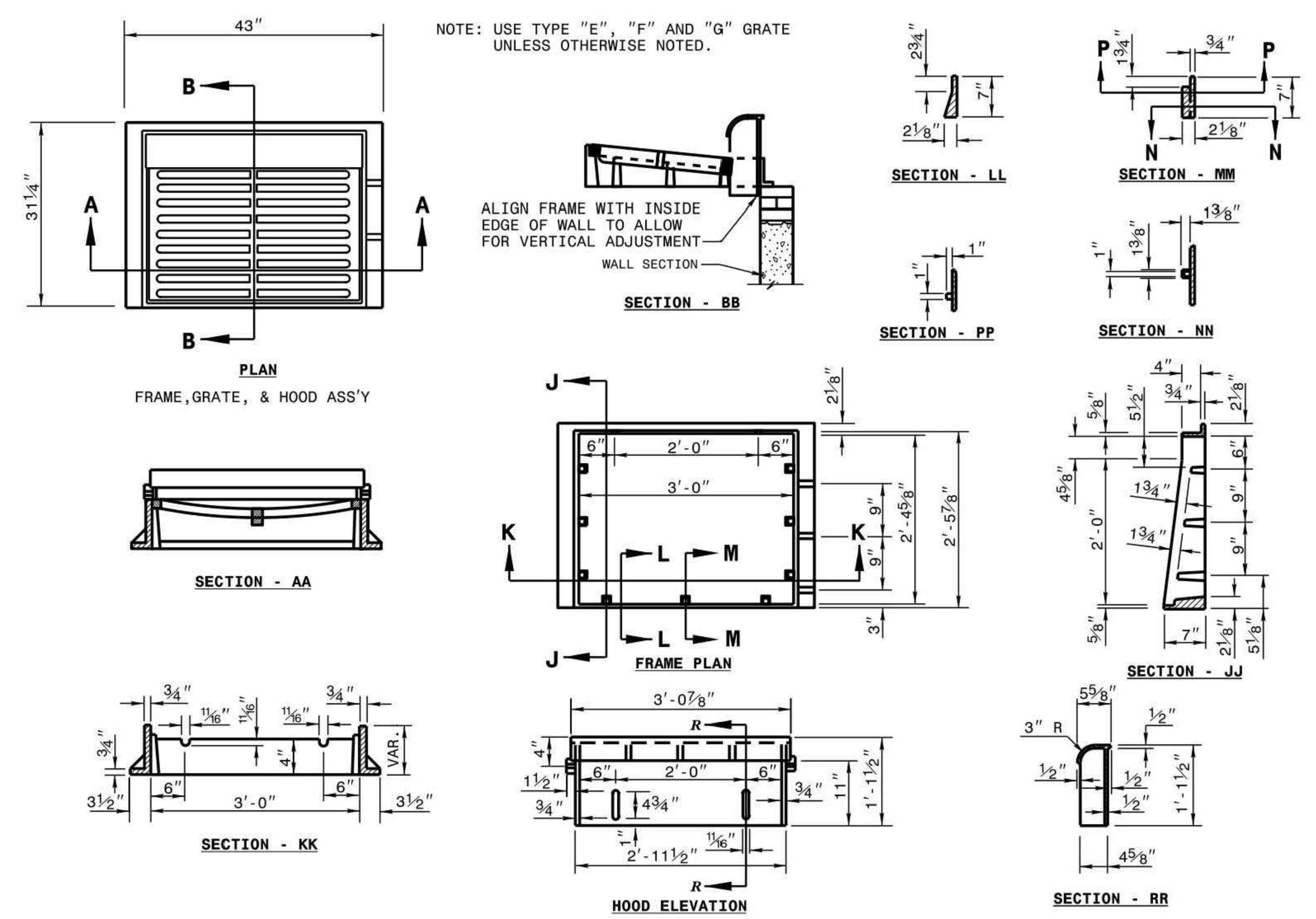

STATE OF NORTH CAROLINA DEPT. OF TRANSPORTATION DIVISION OF HIGHWAYS RALEIGH, N.C.
1-18
ROADWAY STANDARD DRAWING FOR
FRAME, GRATES, AND HOOD
FOR USE ON STANDARD CATCH BASIN
SHEET 1 OF 2
840.03

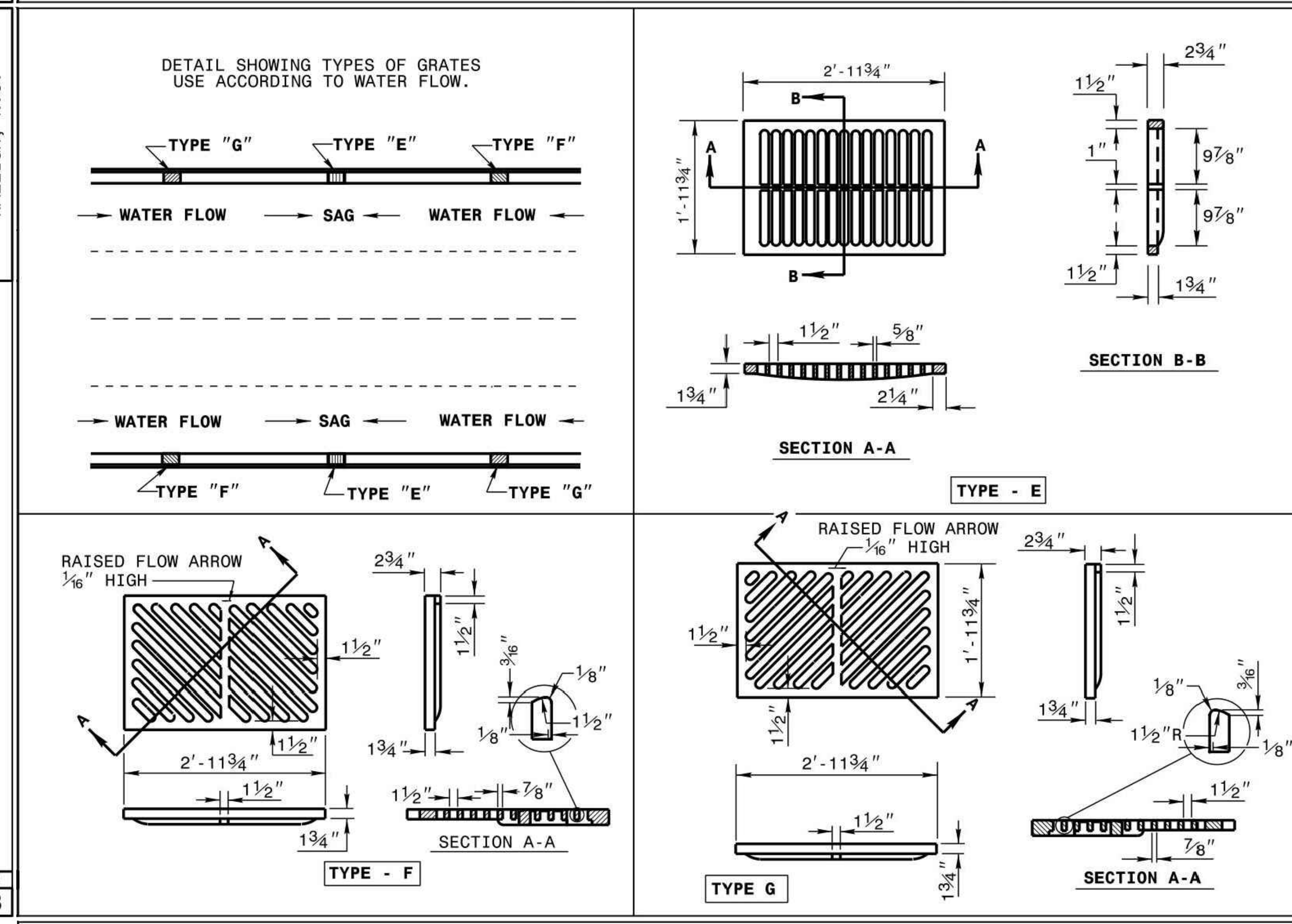

STATE OF NORTH CAROLINA DEPT. OF TRANSPORTATION DIVISION OF HIGHWAYS RALEIGH, N.C.
1-18
ROADWAY STANDARD DRAWING FOR
FRAME, GRATES, AND HOOD
FOR USE ON STANDARD CATCH BASIN
SHEET 2 OF 2
840.03

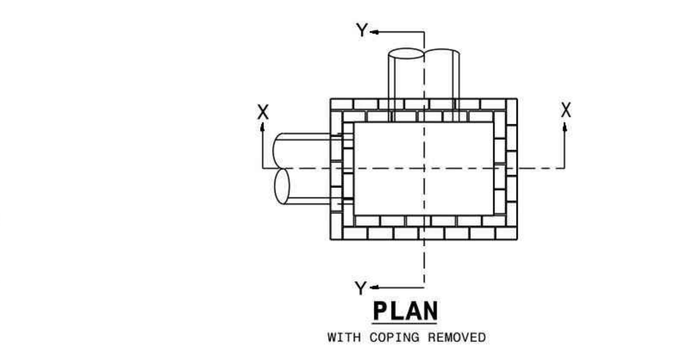

GENERAL NOTES:
MORTAR JOINTS ½" +/- ⅛" THICK.
USE CLASS "B" CONCRETE THROUGHOUT.
USE FORMS FOR CONSTRUCTION OF THE BOTTOM SLAB.
USE #4 BAR DOWELS AT 12" CENTERS.
DEDUCT FOR PIPE(S) FROM TOTAL CU. YDS. OF BRICK MASONRY.
PROVIDE ALL CATCH BASINS OVER 3'-6" IN DEPTH WITH STEPS 12" ON CENTER. USE STEPS WHICH COMPLY WITH STD. DRAWING 840.66.
USE BRICK OR CONCRETE BLOCK WHICH COMPLIES WITH THE REQUIREMENTS OF SECTION 840 OF THE STANDARD SPECIFICATIONS.
IF REINFORCED CONCRETE PIPE IS SET IN BOTTOM SLAB OF BOX, ADD TO SLAB AS SHOWN ON STD. NO. 840.00.
FOR 8'-0" IN HEIGHT OR LESS, USE 8" WALL. OVER 8'-0" IN HEIGHT, USE 12" WALL TO 6'-0" FROM TOP OF WALL AND 8" WALL FOR THE REMAINING 6'-0". QUANTITES TO BE ADJUSTED ACCORDINGLY.
CONSTRUCT WITH PIPE CROWNS MATCHING.
SEE STANDARD DRAWING 840.25 FOR ATTACHMENT OF FRAMES AND GRATES.
DO NOT USE BRICK MASONRY DROP INLET IN LOCATIONS SUBJECT TO TRAFFIC.
CHAMFER ALL EXPOSED CORNERS 1".
DRAWING NOT TO SCALE.

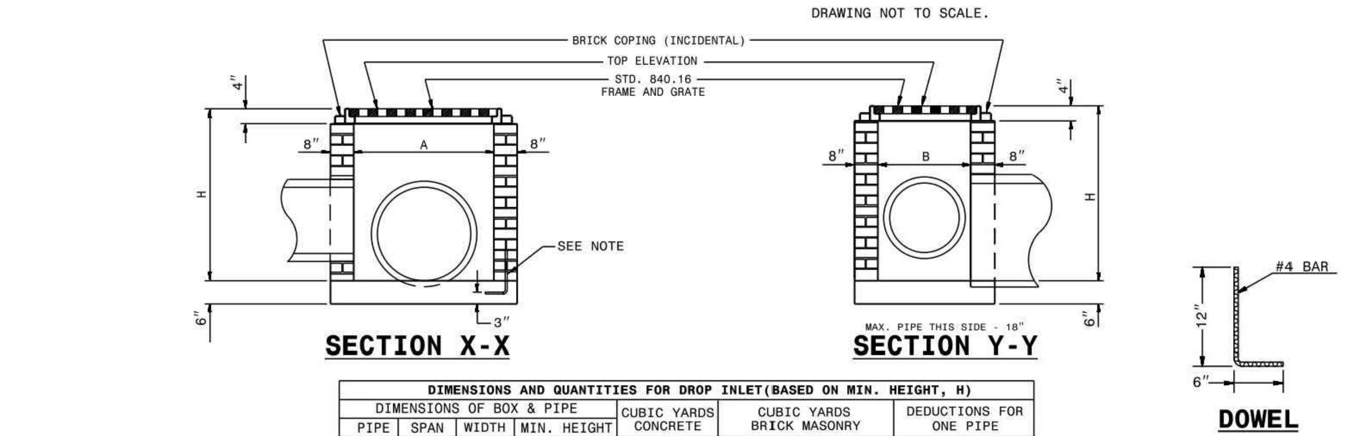

DIMENSIONS AND QUANTITIES FOR DROP INLET(BASED ON MIN. HEIGHT, H)

DIMENSIONS OF BOX & PIPE				CUBIC YARDS CONCRETE	CUBIC YARDS BRICK MASONRY		DEDUCTIONS FOR ONE PIPE	
PIPE	SPAN	WIDTH	MIN. HEIGHT					
D	A	B	H	BOTTOM SLAB	WALL PER FOOT HT.	TOTAL BRICK MASONRY FOR MIN. HEIGHT, H	C.S.	R.C.
12"	3'-0"	2'-0"	2'-0"	0.268	0.313	0.522	0.020	0.032
15"			2'-3"	0.268	0.313	0.600	0.031	0.047
18"			2'-6"	0.268	0.313	0.678	0.044	0.065
24"			3'-0"	0.268	0.313	0.835	0.078	0.113
30"	3'-0"	2'-0"	3'-6"	0.268	0.313	0.991	0.122	0.170

STATE OF NORTH CAROLINA DEPT. OF TRANSPORTATION DIVISION OF HIGHWAYS RALEIGH, N.C.
1-18
ROADWAY STANDARD DRAWING FOR
BRICK DROP INLET
12" THRU 30" PIPE
SHEET 1 OF 1
840.15

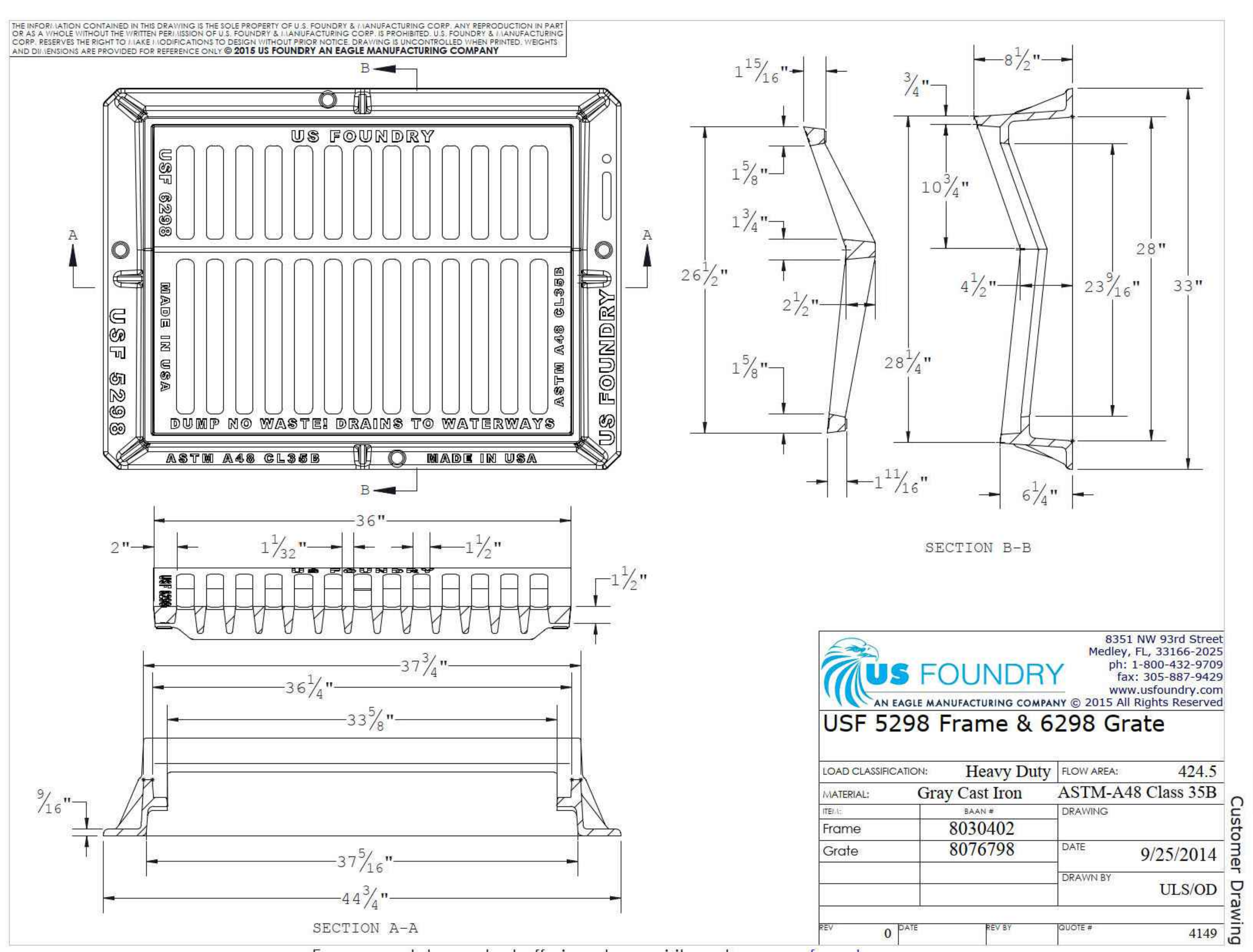

For a complete product offering please visit us at www.usfoundry.com

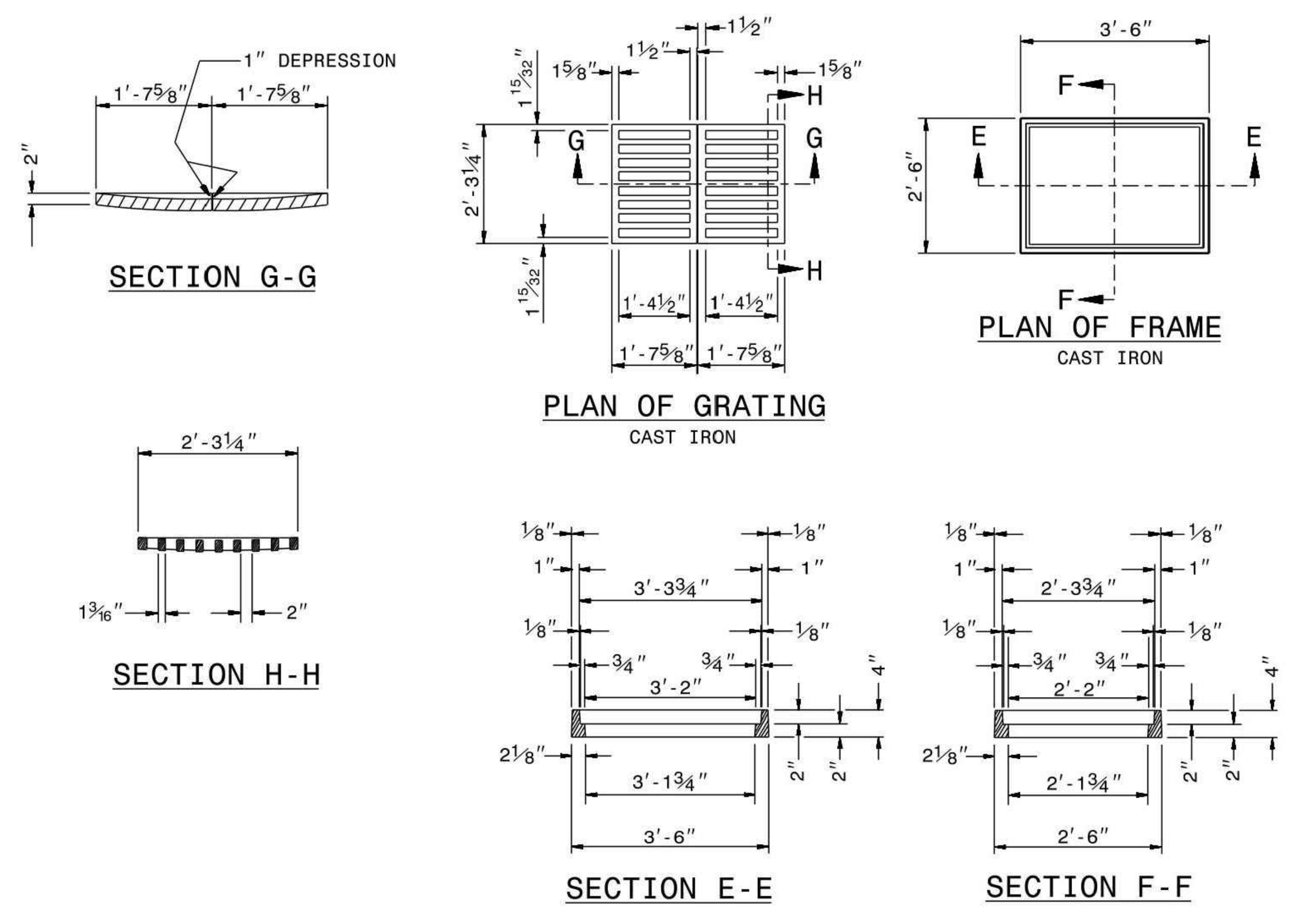

STATE OF NORTH CAROLINA DEPT. OF TRANSPORTATION DIVISION OF HIGHWAYS RALEIGH, N.C.
1-18
ROADWAY STANDARD DRAWING FOR
DROP INLET FRAME AND GRATES
FOR USE WITH STD. DWG.S 840.14 AND 840.15
SHEET 1 OF 1
840.16

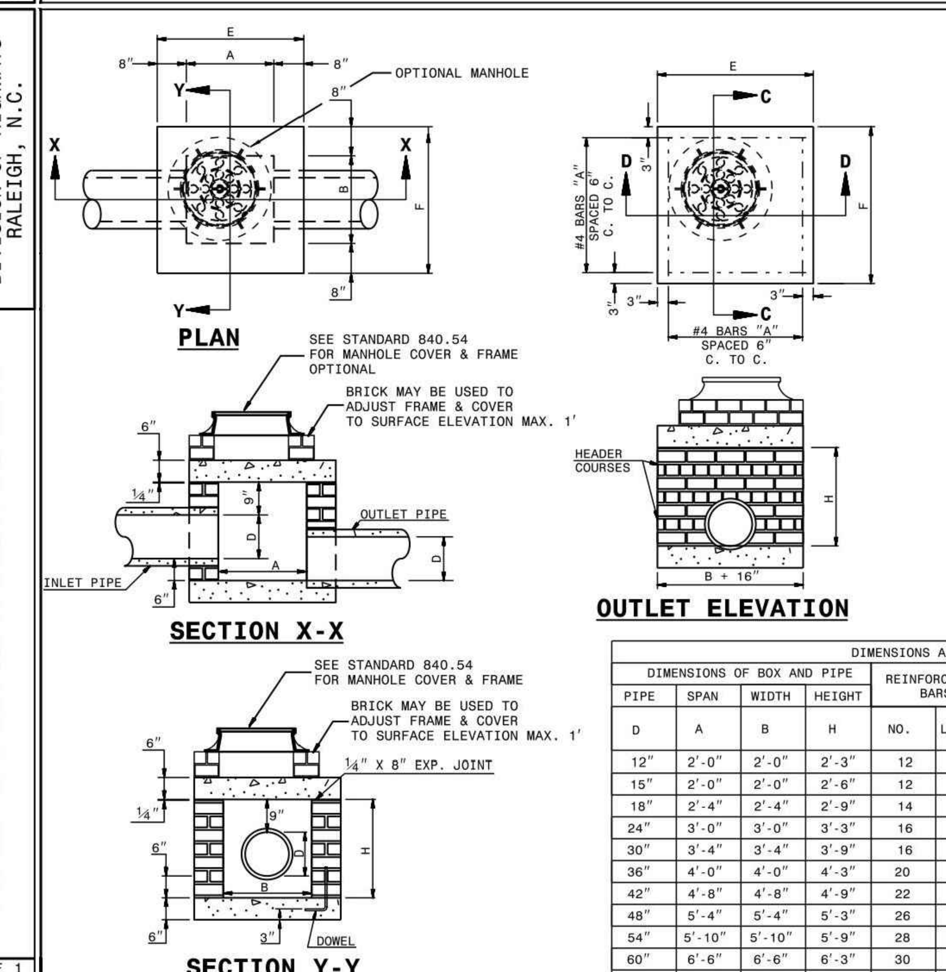

GENERAL NOTES:
CHAMFER ALL EXPOSED CORNERS 1".
USE CLASS "B" CONCRETE THROUGHOUT.
USE #4 BAR DOWELS AT 12" CENTERS.
MORTAR JOINTS ½" ± ⅛" THICK.
CONCAVE TOO ALL EXPOSED JOINTS.
USE FORMS TO CONSTRUCT THE BOTTOM SLAB.
JUMBO BRICK WILL BE PERMITTED. CONCRETE BRICK OR 4" SOLID CONCRETE BLOCKS MAY BE USED IN LIEU OF CLAY BRICK.
FOR 8'-0" IN HEIGHT OR LESS, USE 8" WALL. OVER 8'-0" IN HEIGHT, USE 12" WALL TO 6'-0" FROM TOP OF WALL, AND 8" WALL FOR THE REMAINING 6'-0". ADJUST DIMENSIONS AND QUANTITIES ACCORDINGLY.
IF REINFORCED CONCRETE PIPE IS SET IN BASE SLAB OF BOX, ADD TO BASE AS SHOWN ON STANDARD NO. 840.00.
PROVIDE ALL JUNCTION BOXES OVER 3'-6" IN DEPTH WITH STEPS 12" ON CENTERS IN ACCORDANCE WITH STD. NO. 840.66.
ADJUST THE STEEL, CONCRETE AND BRICK MASONRY QUANTITIES TO INCLUDE THE ADDITION OF THE MANHOLE (I.E. DIAGONAL BARS SHORTENED AROUND OPENING IN TOP SLAB, ADDITIONAL VARIABLE HEIGHT BRICK MASONRY, OPENING IN TOP SLAB.)
MAX. DEPTH OF THIS STRUCTURE FROM TOP OF BOTTOM SLAB TO TOP ELEVATION IS 12 FEET.

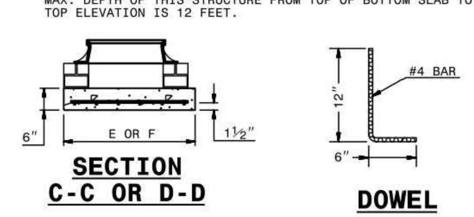

DIMENSIONS AND QUANTITIES FOR BRICK JUNCTION BOXES

DIMENSIONS OF BOX AND PIPE				REINFORCEMENT BARS		TOP SLAB DIMENSIONS		CUBIC YARDS			DEDUCTIONS FOR ONE PIPE CU.YDS.	
PIPE	SPAN	WIDTH	HEIGHT					CONC.	BRICK MASONRY			
D	A	B	H	NO.	LENGTH	E	F	TOP & BOTTOM CU. YD.	MIN. HEIGHT CU. YD.	WALL PER FT. HT. CU. YD.	C.S.	R.C.
12"	2'-0"	2'-0"	2'-3"	12	3'-1"	3'-4"	3'-4"	0.412	0.591	0.263	0.020	0.032
15"	2'-0"	2'-0"	2'-6"	12	3'-1"	3'-4"	3'-4"	0.412	0.657	0.263	0.031	0.047
18"	2'-4"	2'-4"	2'-9"	14	3'-5"	3'-8"	3'-8"	0.498	0.814	0.296	0.044	0.065
24"	3'-0"	3'-0"	3'-3"	16	4'-1"	4'-4"	4'-4"	0.695	1.176	0.362	0.078	0.113
30"	3'-4"	3'-4"	3'-9"	16	4'-5"	4'-8"	4'-8"	0.807	1.481	0.395	0.122	0.170
36"	4'-0"	4'-0"	4'-3"	20	5'-1"	5'-4"	5'-4"	1.053	1.959	0.461	0.176	0.238
42"	4'-8"	4'-8"	4'-9"	22	5'-9"	6'-0"	6'-0"	1.333	2.503	0.527	0.240	0.323
48"	5'-4"	5'-4"	5'-3"	26	6'-5"	6'-8"	6'-8"	1.646	2.940	0.560	0.313	0.422
54"	5'-10"	5'-10"	5'-9"	28	6'-11"	7'-2"	7'-2"	1.902	3.502	0.609	0.396	0.535
60"	6'-6"	6'-6"	6'-3"	30	7'-7"	7'-10"	7'-10"	2.272	4.113	0.658	0.489	0.660
66"	7'-1"	7'-1"	6'-9"	32	8'-2"	8'-5"	8'-5"	2.624	4.778	0.708	0.591	0.798

STATE OF NORTH CAROLINA DEPT. OF TRANSPORTATION DIVISION OF HIGHWAYS RALEIGH, N.C.
1-18
ROADWAY STANDARD DRAWING FOR
BRICK JUNCTION BOX
(WITH OPTIONAL MANHOLE)
12" THRU 66" PIPE
SHEET 1 OF 1
840.32

MCADAMS
The John R. McAdams Company, Inc.
621 Hillsborough Street
Suite 500
Raleigh, NC 27603
phone 919. 361. 5000
fax 919. 361. 2269
license number: C-0293, C-187
www.mcadamsco.com

WALLBROOK LANDCO, LLC
3 KEEL STREET, SUITE 2
WRIGHTSVILLE BEACH, NORTH CAROLINA
28480-1709

WALLBROOK
CONSTRUCTION DRAWINGS
ROLESVILLE, NORTH CAROLINA

NORTH CAROLINA PROFESSIONAL ENGINEER SEAL 22630 WILLIAM T. O'DANIEL

Digitally signed by William T O'Daniel
Date: 2024.08.30 15:48:11-04'00'

REVISIONS

NO.	DATE	
1	09. 27. 2023	WALL CREEK DRIVE TIE-IN REVISIONS
2	11. 02. 2023	EW-400 REVISION
3	05. 10. 2024	UPDATING SCM B GRADING AND SCM A OUTLET
4	06. 06. 2024	SEWER MANHOLE REVISIONS
5	08. 30. 2024	UPDATED BUILDING FOOTPRINTS AND IMPERVIOUS AREA

PLAN INFORMATION

PROJECT NO.	CPR-19100
FILENAME	CPR19100-CD-D1
CHECKED BY	WTO
DRAWN BY	---
SCALE	N.T.S.
DATE	05. 22. 2023

SHEET

STORM DRAINAGE DETAILS

C8.01

FINAL DRAWING - RELEASED FOR CONSTRUCTION

X:\Projects\CPR\CPR-19100\04-Production\Engineering\Site Plan-Construction Drawings\Current Drawings\CPR19100-CD-D1.dwg, 8/29/2024 1:02:03 PM, Tommy Dabolt

GENERAL NOTES:

USE STANDARD OR JUMBO BRICK FOR WALL CONSTRUCTION. SOLID CONCRETE BRICK OR BLOCK ARE OPTIONAL WALL CONSTRUCTION MATERIAL

INCLUDE ALL ADJUSTMENTS TO WALLS, SLABS OR REINFORCING MATERIAL IN THE UNIT PRICE BID FOR EACH UNIT.

INSTALL OPTIONAL MANHOLE IN POSITION AS DIRECTED BY THE ENGINEER. CUT OR BEND ALL REBAR CROSSING THIS OPENING TO ALLOW 2" MINIMUM CONCRETE COVERAGE. ENCLOSE THE OPENING WITH 8 "A" BARS TIED TO TO THE REBAR MAT AND SET SO A MINIMUM OF 3" CONCRETE COVER IS ATTAINED. REFERENCE STD. NO. 840.54 FOR MANHOLE INFORMATION.

PROVIDE JUNCTION BOXES WITH MAHNOLES OVER 3'-6" IN DEPTH WITH STEPS PLACED ON 12" CENTERS. REFERENCE STD. NO. 840.66.

SPACE DOWEL "C" BARS AT A MAXIMUM OF 12" CENTERS.

MAXIMUM DEPTH OF THIS UNIT AS SHOWN IS 12'.

CONSTRUCT THE JUNCTION BOX IN ACCORDANCE WITH SECTIONS 830, 832, 834 AND 840 OF THE STANDARD SPECIFICATIONS.

BILL OF MATERIAL

BAR	QTY.	SIZE	LENGTH	WEIGHT
A	8	#5	1'-2"	9.7
B	14	#5	5'-6"	80.3
C	26	#4	1'-6"	26.1
Y	14	#5	6'-11½"	101.5
STEEL TOTAL WEIGHT				217.6
CU. YDS. CLASS "AA" CONC.				2.6
CU. YDS. BRICK/FT. HT. (8")				0.53
CU. YDS. BRICK/FT. HT. (12")				0.84

STATE OF NORTH CAROLINA DEPT. OF TRANSPORTATION DIVISION OF HIGHWAYS RALEIGH, N.C.

1-18

ROADWAY STANDARD DRAWING FOR
TRAFFIC BEARING JUNCTION BOX
FOR USE WITH PIPES 42" AND UNDER

SHEET 2 OF 2
840.34

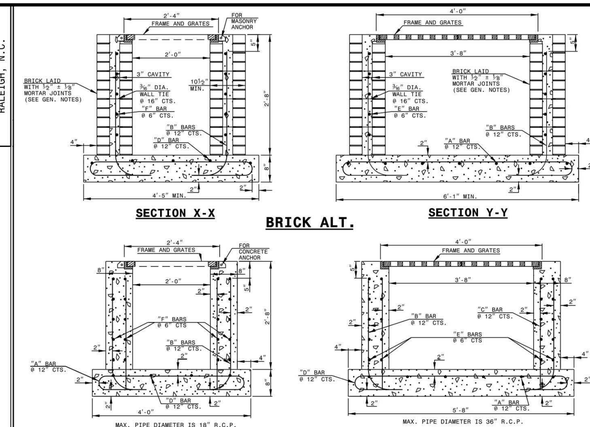

NOTES:
-HORIZONTAL AND VERTICAL DIMENSIONS MAY BE ADJUSTED AS THE FIELD CONDITIONS AND/OR ALTERNATE DESIGN REQUIRE.
-MAXIMUM HEIGHT FOR THIS STRUCTURE IS 14'-0".
-MAKE ALL ADJUSTMENTS AS DIRECTED BY THE ENGINEER.
-DEPTH OF STEEL GRATE WILL REQUIRE DEEPER SEAT ALONG SHORT WALLS.

STATE OF NORTH CAROLINA DEPT. OF TRANSPORTATION DIVISION OF HIGHWAYS RALEIGH, N.C.

1-18

ROADWAY STANDARD DRAWING FOR
TRAFFIC BEARING GRATED DROP INLET
FOR CAST IRON DOUBLE FRAME AND GRATES

SHEET 1 OF 2
840.35

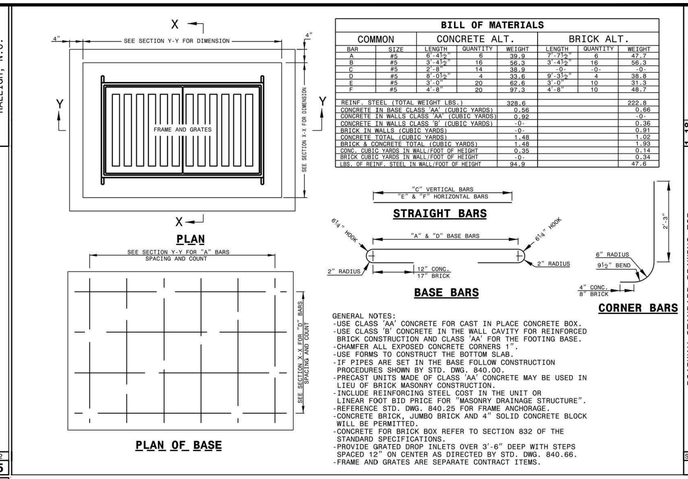

BILL OF MATERIALS

	COMMON		CONCRETE ALT.			BRICK ALT.		
BAR	SIZE	LENGTH	QUANTITY	WEIGHT	LENGTH	QUANTITY	WEIGHT
A	#5	6'-4½"	6	39.9	5'-7½"	6	62.7
B	#5	5'-4½"	16	56.3	5'-4½"	16	56.3
C	#5	2'-0½"	14	38.9	0-	0-	0-
D	#4	8'-0½"	4	22.6	9'-3½"	4	34.8
E	#5	3'-0"	20	62.5	3'-0"	10	31.3
F	#5	4'-8"	20	97.3	4'-8"	10	48.7
REINF. STEEL TOTAL WEIGHT LBS.:				328.6			222.8
CONCRETE IN BASE CLASS 'AA' (CUBIC YARDS):				0.56			0.66
CONCRETE IN WALLS CLASS 'AA' (CUBIC YARDS)				0.92			-0-
CONCRETE IN WALLS CLASS 'B' (CUBIC YARDS)				-0-			0.36
BRICK IN WALLS (CUBIC YARDS)				-0-			0.91
CONCRETE TOTAL (CUBIC YARDS)				1.48			1.02
BRICK & CONCRETE TOTAL (CUBIC YARDS)				1.48			1.93
CONC. CUBIC YARDS IN WALL/FOOT OF HEIGHT				0.35			0.14
BRICK CUBIC YARDS IN WALL/FOOT OF HEIGHT				-0-			0.34
LBS. OF REINF. STEEL IN WALL/FOOT OF HEIGHT				84.9			47.6

GENERAL NOTES:
-USE CLASS 'AA' CONCRETE FOR CAST IN PLACE CONCRETE BOX.
-USE CLASS 'B' CONCRETE IN THE WALL CAVITY FOR REINFORCED BRICK CONSTRUCTION AND CLASS 'AA' FOR THE FOOTING BASE.
-CHAMFER ALL EXPOSED CONCRETE CORNERS 1".
-USE FORMS TO CONSTRUCT THE BOTTOM SLAB.
-IF PIPES ARE SET IN THE BASE FOLLOW CONSTRUCTION PROCEDURES SHOWN BY STD. DWG. 840.00.
-PRECAST UNITS MADE OF CLASS 'AA' CONCRETE MAY BE USED IN LIEU OF BRICK MASONRY CONSTRUCTION.
-INCLUDE REINFORCING STEEL COST IN THE UNIT OR LINEAR FOOT BID PRICE FOR "MASONRY DRAINAGE STRUCTURE".
-REFERENCE STD. DWG. 840.25 FOR FRAME ANCHORAGE.
-CONCRETE BRICK, JUMBO BRICK AND 4" SOLID CONCRETE BLOCK WILL BE PERMITTED.
-CONCRETE FOR BRICK BOX REFER TO SECTION 832 OF THE STANDARD SPECIFICATIONS.
-PROVIDE GRATED DROP INLETS OVER 3'-6" DEEP WITH STEPS SPACED 12" ON CENTER AS DIRECTED BY STD. DWG. 840.66.
-FRAME AND GRATES ARE SEPARATE CONTRACT ITEMS.

STATE OF NORTH CAROLINA DEPT. OF TRANSPORTATION DIVISION OF HIGHWAYS RALEIGH, N.C.

1-18

ROADWAY STANDARD DRAWING FOR
TRAFFIC BEARING GRATED DROP INLET
FOR CAST IRON DOUBLE FRAME AND GRATES

SHEET 2 OF 2
840.35

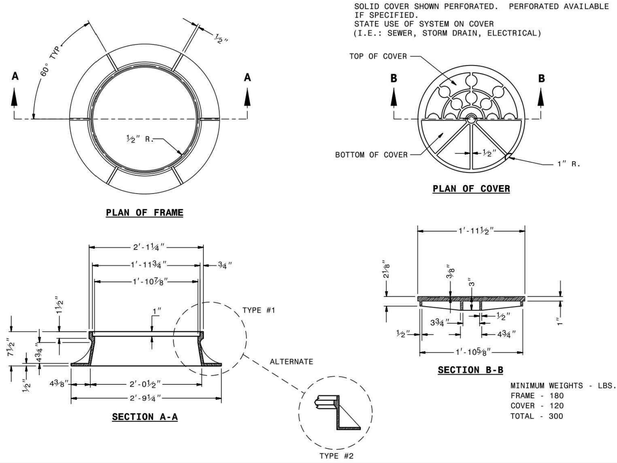

SOLID COVER SHOWN PERFORATED. PERFORATED AVAILABLE IF SPECIFIED.
STATE USE OF SYSTEM ON COVER
(I.E.: SEWER, STORM DRAIN, ELECTRICAL)

MINIMUM WEIGHTS - LBS.
FRAME - 180
COVER - 120
TOTAL - 300

STATE OF NORTH CAROLINA DEPT. OF TRANSPORTATION DIVISION OF HIGHWAYS RALEIGH, N.C.

1-18

ROADWAY STANDARD DRAWING FOR
MANHOLE FRAME AND COVER

SHEET 1 OF 1
840.54

NOTES:
INSTALL ALL STEPS PROTRUDING 4" FROM INSIDE FACE OF STRUCTURE WALL.
STEPS DIFFERING IN DIMENSIONS, CONFIGURATION, OR MATERIALS FROM THOSE SHOWN MAY ALSO BE USED PROVIDED THE CONTRACTOR HAS FURNISHED THE ENGINEER WITH DETAILS OF THE PROPOSED STEPS AND HAS RECEIVED WRITTEN APPROVAL FROM THE ENGINEER FOR THE USE OF SUCH STEPS.

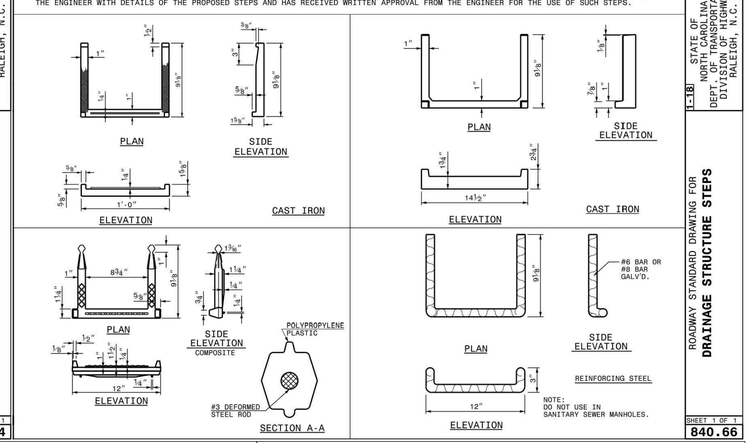

NOTE:
DO NOT USE IN SANITARY SEWER MANHOLES.

STATE OF NORTH CAROLINA DEPT. OF TRANSPORTATION DIVISION OF HIGHWAYS RALEIGH, N.C.

1-18

ROADWAY STANDARD DRAWING FOR
DRAINAGE STRUCTURE STEPS

SHEET 1 OF 1
840.66

H=	THE FILL HEIGHT MEASURED VERTICALLY AT ANY POINT ALONG THE PIPE FROM THE TOP OF THE EMBANKMENT AT THE POINT. DO NOT OPERATE HEAVY EQUIPMENT OVER ANY PIPE CULVERT UNTIL THE PIPE HAS BEEN PROPERLY BACKFILLED AND COVERED WITH AT LEAST 3 FEET OF APPROVED MATERIAL.
	UNDISTURBED EARTH MATERIAL
	BEDDING (MIDDLE AND OUTER): LOOSELY PLACED SELECT BACKFILL MATERIAL MEETING NCDOT CLASS II, TYPE 1 (WASHED OR UNWASHED CRUSHED STONE SCREENINGS) OR CLASS III, TYPE 1 (NCDOT 25 OR 2M5 FINE AGGREGATE). LEAVE SECTION DIRECTLY BENEATH PIPE UNCOMPACTED AS PIPE SEATING AND BACKFILL WILL ACCOMPLISH COMPACTION.
	SELECT BACKFILL (BELOW SPRINGLINE): SELECT BACKFILL MATERIAL MEETING NCDOT CLASS II, TYPES 1 OR 2 OR NCDOT CLASS III, TYPES 1 OR 2
	BACKFILL: APPROVED SUITABLE LOCAL COMPACTABLE MATERIAL ABOVE SPRINGLINE OF PIPE MEETING LOCAL MUNICIPAL SPECIFICATIONS.
	ROCK FOUNDATION OR UNSUITABLE MATERIAL FOUNDATION: SELECT MATERIAL NCDOT CLASS V (#78M STONE) OR NCDOT CLASS VI (#57 STONE) FOR FOUNDATION CONDITIONING. ENCAPSULATE WITH ENGINEERING FABRIC AS DIRECTED BY THE ENGINEER: TYPE 4 SOIL STABILIZATION FABRIC (NCDOT TABLE 1056-1). OVERLAP ALL TRANSVERSE AND LONGITUDINAL JOINTS IN FABRIC AT LEAST 18 INCHES. MAINTAIN THE PIPE FOUNDATION IN A DRY CONDITION.

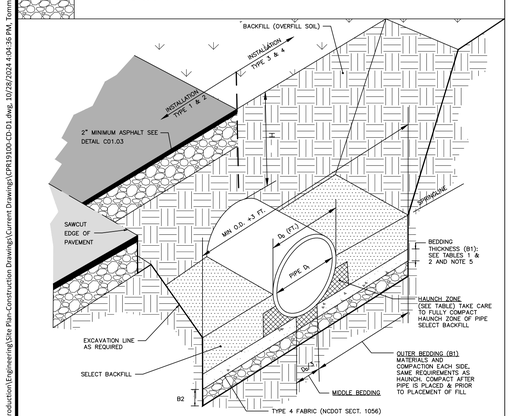

STORM DRAIN PIPE INSTALLATION
N.T.S.

1 OF 3

TABLE 1
EQUIVALENT USCS[a] AND AASHTO SOIL CLASSIFICATION FOR SIDD[b] SOIL DESIGNATIONS

SIDD	USCS	NCDOT/AASHTO
GRAVELLY SAND (CATEGORY I)	SW, SP, GW, GP	–NCDOT CLASS II–TYPE I (CRUSHED STONE SCREENINGS), LL<30; PI≤6 –NCDOT CLASS III, TYPE I (2S OR 2M5), LL<30; PI≤6
SANDY SILT (CATEGORY II)	GM, SM, ALSO GC, SC WITH LESS THAN 20% PASSING #200 SIEVE	–NCDOT CLASS II TYPE I (CRUSHED STONE SCREENINGS) AND CLASS II, TYPE 2 (AASHTO M145 FOR A–2–4 WITH MAX PI OF 6, A–4 W/ MAX 45% PASSING #200 SIEVE AND A MAX PI OF 6) –NCDOT CLASS III, TYPE 1 (2S OR 2M5) OR CLASS III, TYPE 2 (AASHTO M145 FOR SOIL CLASSIFICATION A–1 OR A–3)
SILTY CLAY (CATEGORY III)	CL, MH, GC, SC	A5, A6

[a] UNIFOLD SOIL CLASSIFICATION SYSTEM
[b] STANDARD INSTALLATIONS DIRECT DESIGN

TABLE 2
STANDARD INSTALLATIONS SOILS AND MINIMUM COMPACTION REQUIREMENTS

INSTALLATION TYPE	BEDDING THICKNESS	OUTER BEDDING (B1) NOTE 5 (% COMPACTION/CATEGORY)	HAUNCH ZONE & SELECT BACKFILL AREA (% COMPACTION/CATEGORY)	LOCATION
TYPE 1	B1 = O/6 (8" MIN) B2=IF ROCK FOUNDATION OR OVER UNSUITABLE FOUNDATION, 2' /FT OF "H", 12" MN/24" MAX	95% CATEGORY 1	90% CATEGORY 1 95% CATEGORY II	PAVED AREAS WITH 2' OR LESS BURY
TYPE 2	B1 = O/6 (8" MIN) B2=IF ROCK FOUNDATION OR OVER UNSUITABLE FOUNDATION, 2' /FT OF "H", 12" MN/24" MAX	90% CATEGORY 1	85% CATEGORY 1 90% CATEGORY II	PAVED AREAS WITH GREATER THAN 2' OF BURY
TYPE 3	B1 = O/6 (8" MIN) B2=IF ROCK FOUNDATION OR OVER UNSUITABLE FOUNDATION, 2' /FT OF "H", 12" MN/24" MAX	85% CATEGORY 1 90% CATEGORY II	85% CATEGORY 1 90% CATEGORY I OR 95% CATEGORY III	IN R/W OUTSIDE OF PAVEMENT
TYPE 4	B1 = O/6 (8" MIN) B2=IF ROCK FOUNDATION OR OVER UNSUITABLE FOUNDATION, 2' /FT OF "H", 12" MN/24" MAX	NO COMPACTION REQUIRED, EXCEPT IF CATEGORY III, USE 85% CATEGORY III	NO COMPACTION REQUIRED, EXCEPT IF CATEGORY II, USE 85% CATEGORY III	NATURAL AREAS

NOTES:
1. COMPACTION AND SOIL SYMBOLS – I.E. "95% CATEGORY I" – REFERS TO CATEGORY I SOIL MATERIAL WITH MINIMUM STANDARD PROCTOR COMPACTION OF 95%.
2. SOIL IN THE OUTER BEDDING, HAUNCH, AND LOWER SIDE ZONES, EXCEPT UNDER THE MIDDLE ⅓ OF THE PIPE, SHALL BE COMPACTED TO AT LEAST THE SAME COMPACTION AS THE MAJORITY OF THE SOIL IN THE OVERFILL (BACKFILL) ZONE.
3. FOR TRENCHES. THE TOP ELEVATION SHALL BE NO LOWER THAN 0.1H BELOW FINISHED GRADE OR, FOR ROADWAYS, ITS TOP SHALL BE NO LOWER THAN AN ELEVATION OF 1–FOOT BELOW THE BOTTOM OF THE PAVEMENT BASE MATERIAL.
4. FOR TRENCHES, THE WIDTH SHALL BE WIDER THAN SHOWN IF REQUIRED FOR ADEQUATE SPACE TO ATTAIN THE SPECIFIED COMPACTION IN THE HAUNCH AND BEDDING ZONES.
5. COMPACT OUTER BEDDING AFTER PIPE IS PLACED AND PRIOR TO PLACEMENT OF SELECT FILL. MIDDLE BEDDING IS UNCOMPACTED.
6. OVERFILL (BACKFILL) SOILS TO BE PLACED PER STANDARD SPECIFICATION 02700 STORM DRAINAGE FOR THE APPLICABLE BACKFILL TYPE AND BURY LIMITATIONS.
7. THESE TWO TABLES WERE MODIFIED TO GENERALLY CONFORM TO THE NCDOT STANDARDS AS SHOWN IN DETAIL 300.01 RIGID PIPE IN TRENCH CONDITION.

REFERENCE SOURCES:
1. AMERICAN CONCRETE PIPE ASSOCIATION DESIGN STANDARDS
2. 2012 NCDOT STANDARD SPECIFICATIONS FOR ROADS AND STRUCTURES AND NCDOT STANDARD DETAILS 300.01 FOR RIGID PIPE, TRENCH CONDITIONS."

STORM DRAIN PIPE INSTALLATION

2 OF 3

FILL HEIGHT TABLE[a]

	TYPE 3 (BEDDING) INSTALLATION (0.01 INCH CRACK)		TYPE 4 (BEDDING) INSTALLATION (0.01 INCH CRACK)	
INSIDE PIPE DIAMETER DI (INCHES)	CLASS III PIPE MAXIMUM BURY H (FEET)	CLASS IV PIPE MAXIMUM BURY H (FEET)	CLASS III PIPE MAXIMUM BURY H (FEET)	CLASS IV PIPE MAXIMUM BURY H (FEET)
15	2 MIN, 12 MAX	1 MIN, 20 MAX	3 MIN, 7 MAX	2 MIN, 12 MAX
18	2 MIN, 12 MAX	1 MIN, 20 MAX	3 MIN, 7 MAX	1 MIN, 13 MAX
24	1 MIN, 12 MAX	1 MIN, 20 MAX	2 MIN, 8 MAX	1 MIN, 13 MAX
30	1 MIN, 12 MAX	1 MIN, 20 MAX	1 MIN, 8 MAX	1 MIN, 13 MAX
36	1 MIN, 12 MAX	1 MIN, 20 MAX	1 MIN, 8 MAX	1 MIN, 13 MAX
42	1 MIN, 12 MAX	1 MIN, 20 MAX	1 MIN, 8 MAX	1 MIN, 13 MAX
48	1 MIN, 12 MAX	1 MIN, 19 MAX	1 MIN, 8 MAX	1 MIN, 13 MAX
54	1 MIN, 12 MAX	1 MIN, 19 MAX	1 MIN, 8 MAX	1 MIN, 13 MAX
60	1 MIN, 12 MAX	1 MIN, 19 MAX	1 MIN, 8 MAX	1 MIN, 13 MAX
72	1 MIN, 11 MAX	1 MIN, 19 MAX	1 MIN, 7 MAX	1 MIN, 13 MAX

FILL HEIGHT TABLE BASE ON:
1. γ_s = 120 PCF (BACKFILL LOAD)
2. AASHTO HL–93 LIVE LOAD
3. POSITIVE PROJECTING EMBANKMENT CONDITION (THIS GIVES CONSERVATIVE RESULTS IN COMPARISON TO TRENCH CONDITIONS)
4. PIPE = REINFORCED CONCRETE PIPE MEETING ASTM C76 (AASHTO M170), WALL C THICKNESS
5. CONCRETE PIPE SHOULD BE INSTALLED IN ACCORDANCE WITH AASHTO LRFD BRIDGE CONSTRUCTION SPECIFICATIONS SECTION 27 OR ASTM C1479.

[a] FILL HEIGHT TABLES, THE PORTION EXCERPTED HERE. WAS DEVELOPED BY THE AMERICAN CONCRETE PIPE ASSOCIATION (ACPA) USING THE INDIRECT DESIGN METHOD IN ACCORDANCE WITH SECTION 12.10.4.3 OF THE AASHTO LRFD BRIDGE DESIGN SPECIFICATION, 4TH, 2007 WITH 2008 INTERIM.

NOTES:
1. GREATER BURY DEPTHS THAN THOSE SHOWN ABOVE ARE ACHIEVABLE BY EITHER USING TYPE 1 OR 2 INSTALLATION, USING CLASS V PIPE, CONTROLLING BACKFILL TYPE, CALCULATING DEPTH USING A TRENCH CONDITION, OR BY SPECIAL DESIGN. SEE ALSO DESIGN DATA 9 PUBLISHED BY THE ACPA FOR DESIGN METHODOLOGY.
2. IN LIEU OF CALCULATING BURY DEPTH FOR OTHER CONDITIONS, FIRST SEE "LRFD FILL HEIGHT TABLES FOR CONCRETE PIPE", LAST REVISED JULY 2009 OR LATER), PREPARED BY THE ACPA FOR OTHER BURY DEPTH POSSIBILITIES

STORM DRAIN PIPE INSTALLATION

3 OF 3

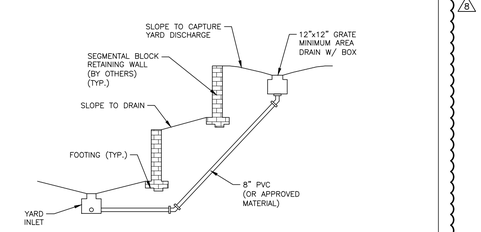

WALL DRAIN INLET DETAIL 1
N.T.S.

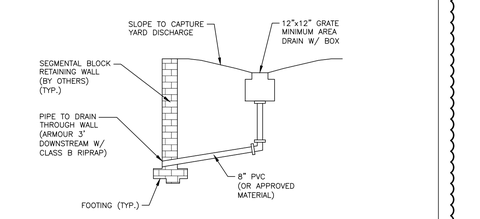

WALL DRAIN INLET DETAIL 2
N.T.S.

McADAMS
The John R. McAdams Company, Inc.
621 Hillsborough Street
Suite 500
Raleigh, NC 27603
phone 919. 361. 5000
fax 919. 361. 2269
license number: C-0293, C-187
www.mcadamsco.com

WALLBROOK LANDCO, LLC
3 KEEL STREET, SUITE 2
WRIGHTSVILLE BEACH, NORTH CAROLINA
28480-1709

WALLBROOK
CONSTRUCTION DRAWINGS
ROLESVILLE, NORTH CAROLINA

NORTH CAROLINA PROFESSIONAL SEAL 22630 ENGINEER WILLIAM T. O'DANIEL

REVISIONS

NO.	DATE	
1	09. 27. 2023	WALL CREEK DRIVE TIE-IN REVISIONS
2	11. 02. 2023	EW-400 REVISION
3	05. 10. 2024	UPDATING SCM B GRADING AND SCM A OUTLET
4	06. 06. 2024	SEWER MANHOLE REVISIONS
5	08. 30. 2024	UPDATED BUILDING FOOTPRINTS AND IMPERVIOUS AREA
8	10. 28. 2024	ADDED WALL DRAIN DETAIL

PLAN INFORMATION

PROJECT NO.	CPR-19100
FILENAME	CPR19100-CD-D1
CHECKED BY	.
DRAWN BY	.
SCALE	N.T.S.
DATE	05. 22. 2023

SHEET

STORM DRAINAGE DETAILS
C8.02

FINAL DRAWING - RELEASED FOR CONSTRUCTION

X:\Projects\CPR\CPR-19100\04-Production\Engineering\Site Plan-Construction Drawings\Current Drawings\CPR19100-CD-D1.dwg, 10/28/2024 4:04:36 PM, Tommy Dubois

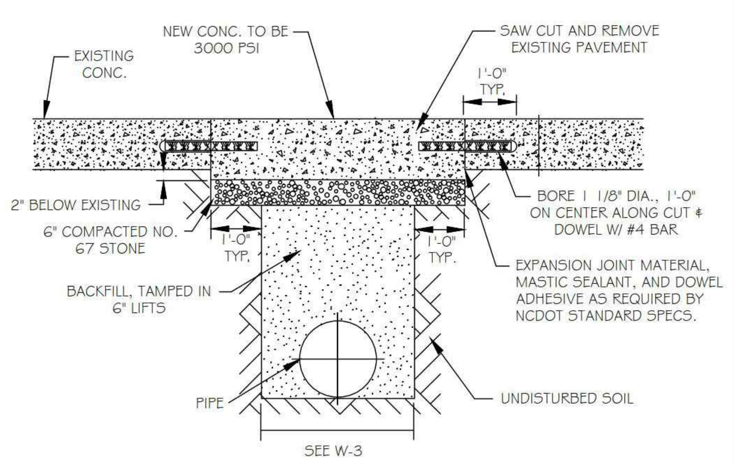

NOTES:
1. SEE CITY OF RALEIGH STANDARDS FOR TRENCHES AND PIPE BEDDING W-3 FOR ADDITIONAL DETAILS
2. PAVEMENT CUTS WITHIN NCDOT ROW SHALL CONFORM TO THE APPROVED ON SITE ENCROACHMENT PERMIT.
3. THE PAVEMENT CUT SHALL BE DEFINED BY A STRAIGHT EDGE AND CUT WITH AN APPROVED SAW CUT MACHINE.
4. THE TRENCH SUBGRADE MATERIAL SHALL BE BACKFILLED WITH SUITABLE MATERIAL AND COMPACTED TO A DENSITY OF AT LEAST 95% OF THAT OBTAINED BY COMPACTING A SAMPLE OF THE MATERIAL IN ACCORDANCE WITH AASHTO T-99 AS MODIFIED BY NCDOT. 5. THE FINAL 6" OF FILL SHALL CONSIST OF ABC MATERAIL COMPACTED TO A DENSITY EQUAL TO 100% OF THAT OBTAINED BY COMPACTING A SAMPLE OF THE MATERIAL IN ACCORDANCE WITH AASHTO T-80 AS MODIFIED BY NCDOT .

CITY OF RALEIGH
DEPARTMENT OF PUBLIC UTILITIES
STANDARD CONCRETE PAVEMENT PATCH DETAIL

DWG. NO.	REVISIONS	DATE	REVISIONS	DATE
W-1	RRH	3-31-00	A.B.B.	10-29-10
	A.B.B.	2-8-05	MAB	10-31-13

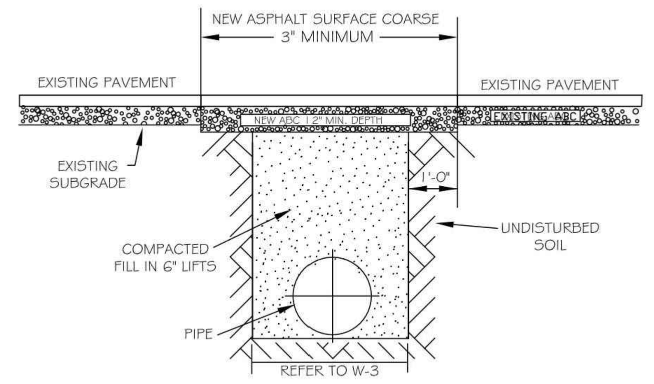

NOTES:
1. THE PAVEMENT CUT SHALL BE DEFINED BY A STRAIGHT EDGE AND CUT WITH AN APPROPRIATE SAW CUT MACHINE.
2. THE TRENCH SUBGRADE MATERIAL SHALL BE BACKFILLED WITH SUITABLE MATERIAL AND COMPACTED TO A DENSITY OF AT LEAST 95% OF THAT OBTAINED BY COMPACTING A SAMPLE OF THE MATERIAL IN ACCORDANCE WITH AASHTO T-99 AS MODIFIED BY NCDOT.
3. THE FINAL 1' OF FILL SHALL CONSIST OF ABC MATERIAL COMPACTED TO A DENSITY EQUAL TO 100% OF THAT OBTAINED BY COMPACTING A SAMPLE OF THE MATERIAL IN ACCORDANCE WITH AASHTO T-80 AS MODIFIED BY NCDOT.
4. THE ENTIRE THICKNESS/ VERTICAL EDGE OF CUT SHALL BE TACKED.
5. THE SAME DEPTH OF PAVEMENT MATERIAL WHICH EXISTS SHALL BE REINSTALLED, BUT IN NO CASE SHALL THE ASPHALT BE LESS THAN 3" THICK.
6. THE ASPHALT PAVEMENT MATERIAL SHALL BE INSTALLED AND COMPACTED THOROUGHLY WITH A SMOOTH DRUM ROLLER TO ACHIEVE A SMOOTH LEVEL PATCH.
7. REFER TO CITY OF RALEIGH STANDARDS FOR TRENCHES AND PIPE BEDDING, W-3. FOR ADDITIONAL DETAILS.
8. NO HAND PATCHING ALLOWED.
9. PAVEMENT CUTS WITHIN NCDOT ROW SHALL CONFORM TO THE APPROVED ON SITE ENCROACHMENT PERMIT.

CITY OF RALEIGH
DEPARTMENT OF PUBLIC UTILITIES
STANDARD ASPHALT PAVEMENT PATCH DETAIL

DWG. NO.	REVISIONS	DATE	REVISIONS	DATE
W-2	RRH	3-31-00	A.B.B.	4-16-04
	D.W.C.	11-1-99	J.P.S.	10-29-10

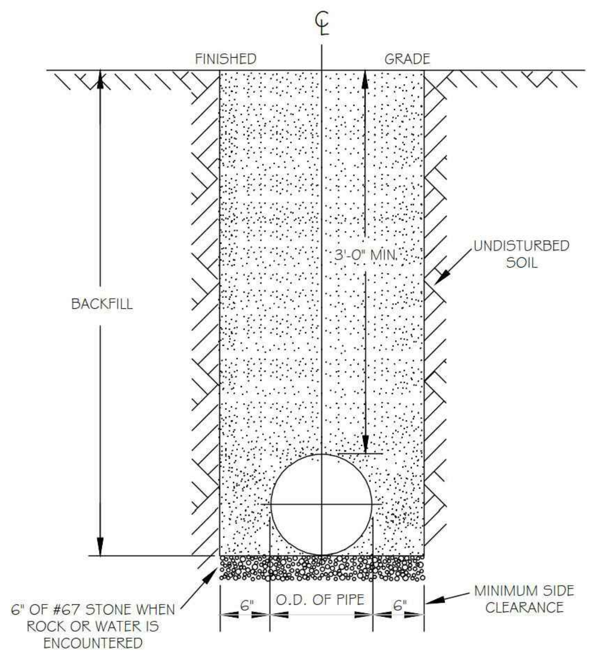

NOTES:
1. TRENCHES REQUIRING SHORING AND BRACING, DIMENSIONS SHALL BE TAKEN FROM THE INSIDE FACE OF THE SHORING AND BRACING.
2. NO ROCKS OR BOULDERS 4" OR LARGER TO BE USED IN BACKFILL.
3. ALL BACKFILL MATERIAL SHALL BE SUITABLE NATIVE MATERIAL.
4. BACKFILL SHALL BE TAMPED IN 6" LIFTS.
5. ACHIEVE 95% COMPACTION IN BACKFILL.

CITY OF RALEIGH
DEPARTMENT OF PUBLIC UTILITIES
TRENCH BOTTOM DIMENSIONS & BACKFILLING REQUIREMENTS FOR DUCTILE IRON

DWG. NO.	REVISIONS	DATE	REVISIONS	DATE
W-3	D.W.C.	9-3-99	ABB	2-15-05
	RRH	3-31-00	J.P.S.	10-29-10

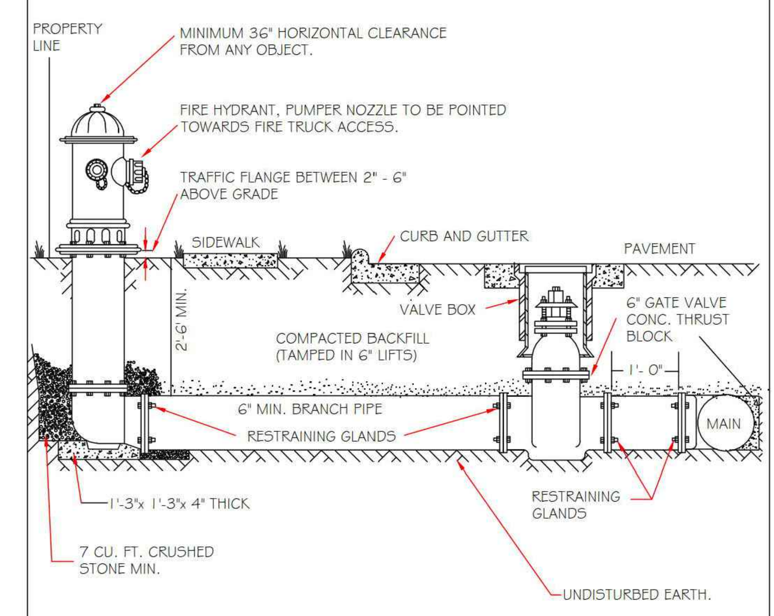

NOTES:
1. FIRE HYDRANT SHALL BE AS MANUFACTURED: MUELLER, AMERICAN DARLING, KENNEDY, M&H, WATEROUS, CLOW, EAST JORDAN IRON WORKS, OR US PIPE.
2. BRANCH PIPE SHALL BE DUCTILE IRON AWWA C150-96
3. 6" GATE VALVE SHALL BE AWWA C500-86 OPEN LEFT
4. STEEL RODS AND BOLTS SHALL BE ¾" HOT DIPPED GALVANIZED
5. FIRE HYDRANTS WILL BE INSTALLED IN TRUE VERTICAL POSITION RODS SHALL NOT BE COUPLED MORE THAN ONCE. IF THE LENGTH FROM THE VALVE TO THE HYDRANT EXCEEDS 20' THEN A MECHANICAL RESTRAINING GLAND WITH A REBAR CAGE SHALL BE INSTALLED NO MORE THAN 10' FROM HYDRANT AND POURED IN CONCRETE. FIRE HYDRANTS TO BE LOCATED IN ROW OR 2 FOOT EASEMENT ADJACENT TO ROW

ANYTIME SITE WORK, CONSTRUCTION, ROAD WORK, OR ANY OTHER WORK CHANGES THE GRADE OF THE FIRE HYDRANT, THE PERSON RESPONSIBLE FOR THE WORK IS RESPONSIBLE FOR ADJUSTING THE FIRE HYDRANT TO STAY WITHIN COMPLIANCE.

CITY OF RALEIGH
DEPARTMENT OF PUBLIC UTILITIES
STANDARD FIRE HYDRANT INSTALLATION DETAIL

DWG. NO.	REVISIONS	DATE	REVISIONS	DATE
W-4	ABB	4-6-04	PAP	2/17/09
	DHL	2/14/08		

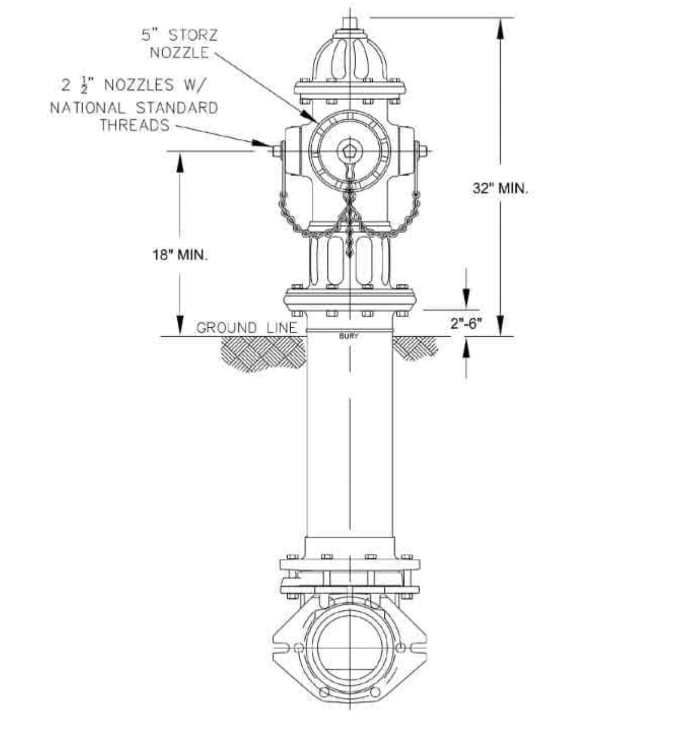

NOTES:
1. ALL PUBLIC FIRE HYDRANTS IN THE CITY OF RALEIGH AND THE MERGER TOWNS OF GARNER, ROLESVILLE, WAKE FOREST, KNIGHTDALE, WENDELL AND ZEBULON SHALL BE PAINTED CHROME YELLOW WITH HIGH REFLECTIVE ALUMINUM SILVER CAPS, BONNETS AND OPERATING NUTS.
2. ALL PRIVATE FIRE HYDRANTS SHALL BE RED.

CITY OF RALEIGH
DEPARTMENT OF PUBLIC UTILITIES
RALEIGH, GARNER, KNIGHTDALE, ROLESVILLE, WAKE FOREST, WENDELL & ZEBULON
STANDARD FIRE HYDRANT WITH 5" STORZ PUMPER NOZZLE

DWG. NO.	REVISIONS	DATE	REVISIONS	DATE
W-5	MAB	6-30-16		
	KAT	9-15-17		

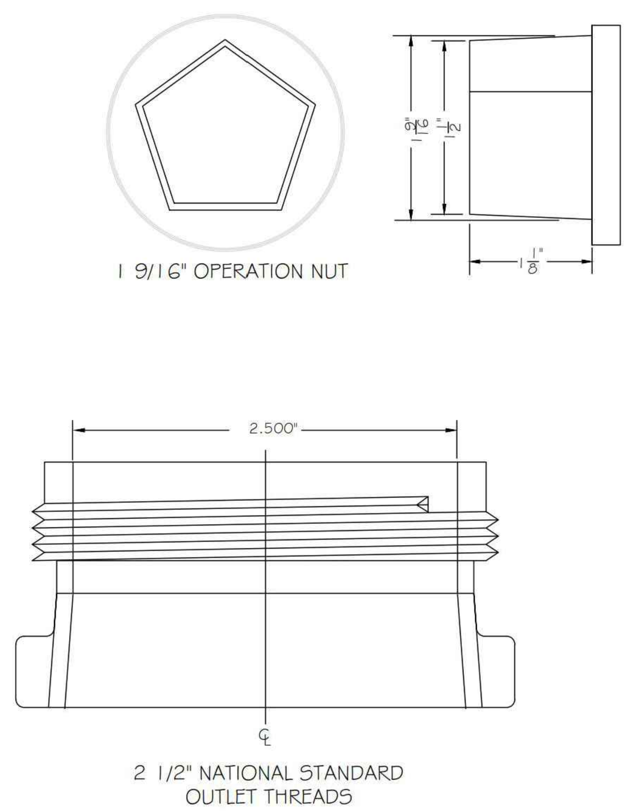

CITY OF RALEIGH
DEPARTMENT OF PUBLIC UTILITIES
HYDRANT OPERATING NUT AND 2 1/2" OUTLET THREADS

DWG. NO.	REVISIONS	DATE	REVISIONS	DATE
W-6	RRH	3-31-00	DHL	2-18-08
	A.B.B	4-13-04	J.P.S	11-1-10

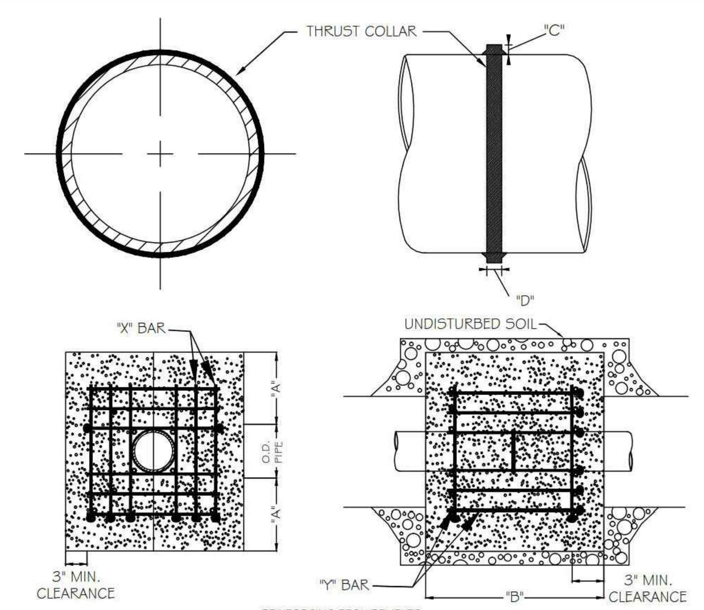

REINFORCING REQUIREMENTS

I.D. PIPE	REBAR SIZE	"X" BAR LENGTH	"X" BAR WEIGHT	"Y" BAR LENGTH	"Y" BAR WEIGHT	NO. REQUIRED
6" - 36"	#5	2'-2"+ O.D. PIPE	1.043 LBS/FT	1'-1"	1.1 LBS. EACH	X-24, Y-12
48" & greater	#6	3'-0"+ O.D. PIPE	1.502 LBS/FT	1'-3"	1.9 LBS. EACH	X-24, Y-12

THRUST COLLAR, AND THRUST SCHEDULE

I.D. PIPE	"A"	"B"	"C"	"D"
6" - 16"	1'-4"	1'-7"	2"	3/8"
20" - 24"	1'-4"	1'-7"	3"	1/2"
30" - 36"	1'-4"	1'-7"	4"	5/8"
48" & greater	1'-8"	1'-9"	6"	7/8"

NOTES:
1. SEE STANDARD DETAIL W-9 FOR THRUST BLOCK LOCATIONS.
2. CONCRETE SHALL BE 3000 PSI AND TRANSIT MIXED.
3. REINFORCING BARS SHALL BE DEFORMED AND TIED TOGETHER.
4. TRENCH BOTTOM WIDTH IN VICINITY OF THRUST BLOCK INSTALLATION SHALL BE THE MINIMUM WIDTH AS SHOWN ON STANDARD DETAIL W-3.
5. BACKFILL TAMPED IN 6" LIFTS PER STANDARD DETAIL W-3.
6. THRUST COLLAR MUST BE FACTORY WELDED ON BOTH SIDES ALONG BOTH EDGES OF COLLAR AROUND CIRCUMFERENCE.

CITY OF RALEIGH
DEPARTMENT OF PUBLIC UTILITIES
THRUST BLOCKING DESIGN DATA FOR WATER MAINS

DWG. NO.	REVISIONS	DATE	REVISIONS	DATE
W-7	RRH	1-21-00	J.P.S.	11-1-10
	D.H.L.	6-18-08		

REACTION BEARING AREAS FOR HORIZONTAL WATER PIPE BENDS
BASED ON TEST PRESSURE OF 200 P.S.I.

ALL AREAS GIVEN IN SQUARE FEET.

SIZE AND DEGREE OF BEND	STATIC THRUST IN POUNDS	MODERATELY DRY CLAY 4000 LBS/FT²	SOFT CLAY 2000 LBS/FT²	1600 LBS/FT² GRAVEL / COARSE SAND	8000 LBS/FT² DRY CLAY - ALWAYS DRY	SAND, COMPACT FIRM 8000 LBS/FT²	SAND -CLEAN DRY 4000 LBS/FT²	SOIL 1000 LBS/FT² QUICKSAND - VERY POOR	ROCK - POOR 10,000 LBS/FT²
6"									
11 1/4°	1,108	1	1	1	1	1	1	2	1
22 1/2°	2,207	1	2	2	1	1	1	3	1
45°	4,328	2	3	3	1	1	2	5	1
90°	7,996	2	4	5	1	1	2	8	1
PLUG	5,655	2	3	4	1	1	2	6	1
8"									
11 1/4°	1,970	1	1	2	1	1	1	2	1
22 1/2°	3,922	1	2	3	1	1	1	4	1
45°	7,694	2	4	5	1	1	2	8	1
90°	14,215	4	8	9	2	2	4	15	2
PLUG	10,053	3	5	6	2	2	3	10	1
12"									
11 1/4°	4,433	2	3	3	1	1	2	5	1
22 1/2°	8,826	3	5	6	2	2	3	9	1
45°	17,312	5	9	11	3	3	5	18	2
90°	31,983	8	16	19	4	4	8	32	4
PLUG	22,619	6	12	14	3	3	6	23	3
16"									
11 1/4°	7,881	2	4	5	1	1	2	8	1
22 1/2°	15,691	4	8	10	2	2	4	16	2
45°	30,779	8	16	19	4	4	8	31	4
90°	56,861	15	29	35	8	8	15	57	6
PLUG	40,213	10	21	25	5	5	10	41	5

REACTION BEARING AREAS ARE IN SQUARE FEET MEASURED IN A VERTICAL PLANE IN THE TRENCH SIDE AT AN ANGLE OF 90° TO THE THRUST VECTOR.

USE 6" - 90 BEND VALUE FOR HYDRANTS FOR ADDITIONAL SAFETY FACTOR.

CITY OF RALEIGH
DEPARTMENT OF PUBLIC UTILITIES
THRUST BLOCKING DESIGN QUANTITY TABLE

DWG. NO.	REVISIONS	DATE	REVISIONS	DATE
W-10	D.W.C.	6-23-99		

REACTION BEARING AREAS FOR HORIZONTAL WATER PIPE BENDS
BASED ON TEST PRESSURE OF 200 P.S.I.

ALL AREAS GIVEN IN SQUARE FEET.

SIZE AND DEGREE OF BEND	STATIC THRUST IN POUNDS	MODERATELY DRY CLAY 4000 LBS/FT²	SOFT CLAY 2000 LBS/FT²	GRAVEL/COARSE SAND 1600LBS/FT²	8000 LBS/FT² DRY CLAY - ALWAYS DRY	SAND, COMPACT FIRM 8000 LBS/FT²	SAND -CLEAN DRY 4000 LBS/FT²	SOIL 1000 LBS/FT² QUICKSAND - VERY POOR	ROCK - POOR 10,000 LBS/FT²
24"									
11 1/4°	17,734	5	9	11	3	3	5	18	2
22 1/2°	35,305	9	18	22	5	5	9	36	4
45°	69,252	18	35	42	9	9	18	70	7
90°	127,936	32	64	77	16	16	32	128	13
PLUG	90,478	23	46	55	12	12	23	91	10
30"									
11 1/4°	27,709	7	14	17	4	4	7	2	3
22 1/2°	55,163	14	28	34	7	7	14	56	6
45°	108,206	28	55	65	14	14	28	109	11
90°	199,900	50	100	120	25	25	50	200	20
PLUG	141,372	36	71	85	18	18	36	142	15
36"									
11 1/4°	39,901	10	20	24	5	5	10	40	4
22 1/2°	79,439	20	40	48	10	10	20	30	8
45°	155,816	39	78	94	20	20	39	156	16
90°	287,855	72	144	172	36	36	72	288	29
PLUG	203,575	51	102	122	26	26	51	204	21
48"									
11 1/4°	70,935	18	36	43	9	9	18	71	8
22 1/2°	141,218	36	71	85	18	18	36	142	15
45°	277,007	70	139	166	35	35	70	277	28
90°	511,742	128	256	320	64	64	128	512	52
PLUG	361,911	91	181	217	46	46	91	362	37

REACTION BEARING AREAS ARE IN SQUARE FEET MEASURED IN A VERTICAL PLANE IN THE TRENCH SIDE AT AN ANGLE OF 90° TO THE THRUST VECTOR.

USE 6" - 90° BEND VALUE FOR HYDRANTS FOR ADDITIONAL SAFETY FACTOR.

CITY OF RALEIGH
DEPARTMENT OF PUBLIC UTILITIES
THRUST BLOCKING DESIGN QUANTITY TABLE

DWG. NO.	REVISIONS	DATE	REVISIONS	DATE
W-11	D.W.C.	6-23-99		

APPROVED METHOD FOR EXTENSION OF VALVE BOX

NOTE: 2'x 2'x 6" CONCRETE PAD REQUIRED ON ALL VALVES. NO PRECAST CONCRETE DOUGHNUT ALLOWED.

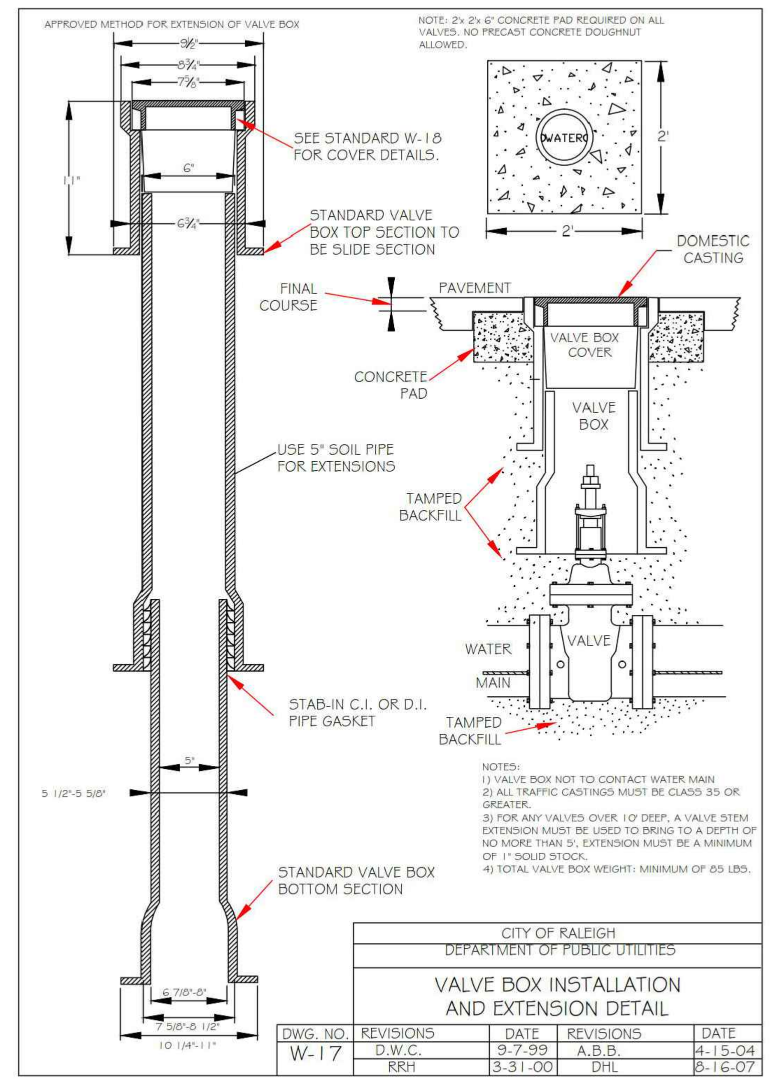

NOTES:
1) VALVE BOX NOT TO CONTACT WATER MAIN
2) ALL TRAFFIC CASTINGS MUST BE CLASS 35 OR GREATER.
3) FOR ANY VALVES OVER 10' DEEP, A VALVE STEM EXTENSION MUST BE USED TO BRING TO A DEPTH OF NO MORE THAN 5'. EXTENSION MUST BE A MINIMUM OF 1" SOLID STOCK.
4) TOTAL VALVE BOX WEIGHT: MINIMUM OF 85 LBS.

CITY OF RALEIGH
DEPARTMENT OF PUBLIC UTILITIES
VALVE BOX INSTALLATION AND EXTENSION DETAIL

DWG. NO.	REVISIONS	DATE	REVISIONS	DATE
W-17	D.W.C.	9-7-99	A.B.B.	4-15-04
	RRH	3-31-00	DHL	8-16-07

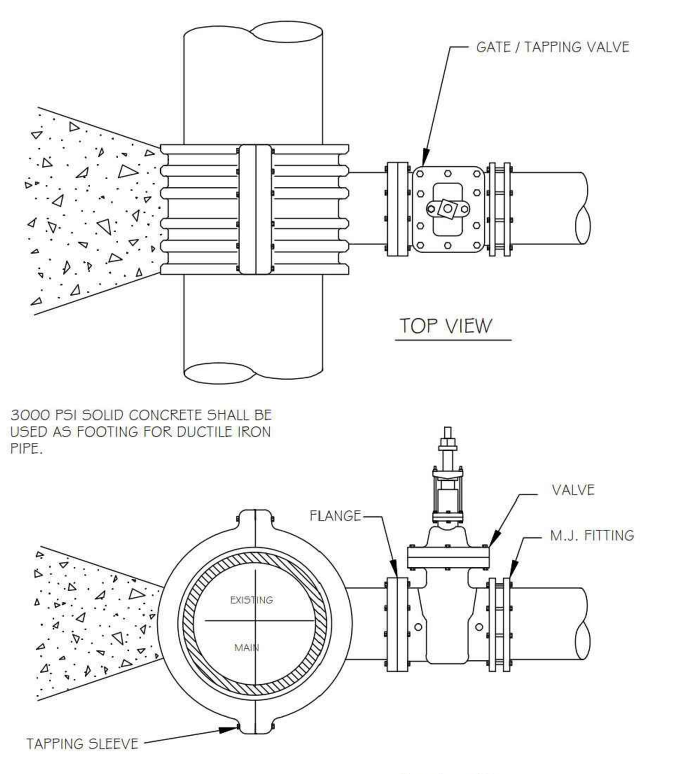

3000 PSI SOLID CONCRETE SHALL BE USED AS FOOTING FOR DUCTILE IRON PIPE.

NOTES:
1. CONCRETE SHALL NOT CONTACT BOLTS OR ENDS OF MECHANICAL JOINT FITTINGS.
2. SEE STANDARD REACTION BLOCK TABLES, W-10 AND W-11 FOR AREA OF CONCRETE REQUIRED.

CITY OF RALEIGH
DEPARTMENT OF PUBLIC UTILITIES
4" - 24" STANDARD TAPPING SLEEVE AND VALVE ASSEMBLY

DWG. NO.	REVISIONS	DATE	REVISIONS	DATE
W-14	Y.C.A.	12-31-91	RRH	3-31-00
	D.W.C.	9-7-99	J.P.S.	11-1-10

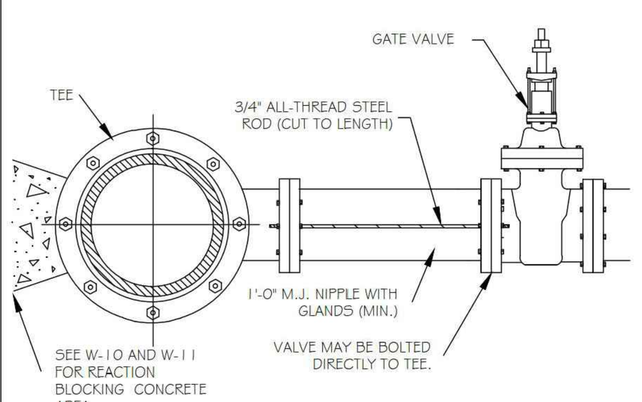

ROD REQUIREMENTS

NO. OF RODS	BRANCH SIZE
4"	2
6"	2
8"	4
12"	4
16"	6
24"	6
30"	8
36"	8

NOTES:
1. STEEL RODS AND BOLTS SHALL BE 3/4" HOT DIPPED GALVANIZED.
2. SEE STANDARD THRUST BLOCK. TABLES W-10 AND W-11 FOR CONCRETE.
3. CONCRETE SHALL NOT CONTACT BOLTS OR ENDS OF MECHANICAL FITTINGS.
4. THIS RODDING REQUIREMENT DOES NOT APPLY TO FIRE HYDRANTS.

CITY OF RALEIGH
DEPARTMENT OF PUBLIC UTILITIES
VALVE RESTRAINT AT TEES AND CROSSES FOR LINES (4"-24")

DWG. NO.	REVISIONS	DATE	REVISIONS	DATE
W-15	RRH	3-31-00	D.H.L.	6-16-08
	A.B.B.	4-19-04	J.P.S.	11-1-10

X:\Projects\CPR\CPR-19100\04-Production\Engineering\Site Plan-Construction Drawings\Current Drawings\CPR19100-CD-D1.dwg, 8/29/2024 1:03:01 PM, Tommy Dabolt

FINAL DRAWING - RELEASED FOR CONSTRUCTION

MCADAMS
The John R. McAdams Company, Inc.
621 Hillsborough Street
Suite 500
Raleigh, NC 27603
phone 919. 361. 5000
fax 919. 361. 2269
license number: C-0293, C-187
www.mcadamsco.com

WALLBROOK LANDCO, LLC
3 KEEL STREET, SUITE 2
WRIGHTSVILLE BEACH, NORTH CAROLINA
28480-1709

WALLBROOK
CONSTRUCTION DRAWINGS
ROLESVILLE, NORTH CAROLINA

W.T. O'Daniel
Digitally signed by William T O'Daniel
Date: 2024.08.30 15:48:14-04'00'

REVISIONS

NO.	DATE	
1	09. 27. 2023	WALL CREEK DRIVE TIE-IN REVISIONS
2	11. 02. 2023	EW-400 REVISION
3	05. 10. 2024	UPDATING SCM B GRADING AND SCM A OUTLET
4	06. 06. 2024	SEWER MANHOLE REVISIONS
5	08. 30. 2024	UPDATED BUILDING FOOTPRINTS AND IMPERVIOUS AREA

PLAN INFORMATION

PROJECT NO.	CPR-19100
FILENAME	CPR19100-CD-D1
CHECKED BY	.
DRAWN BY	.
SCALE	N.T.S.
DATE	05. 22. 2023

SHEET

WATER DETAILS

C8.03

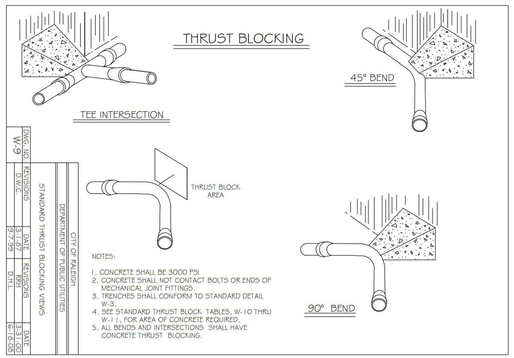

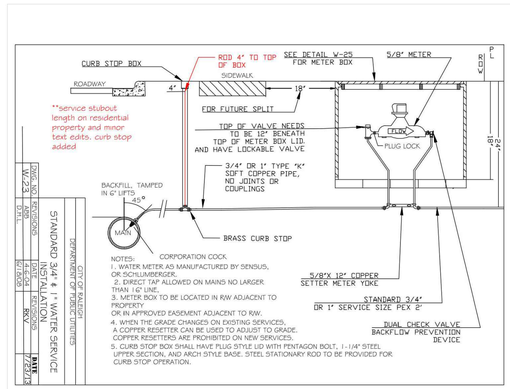

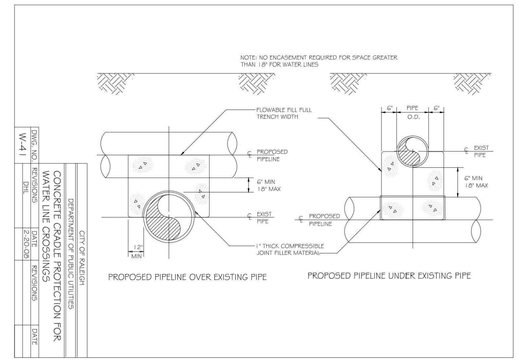

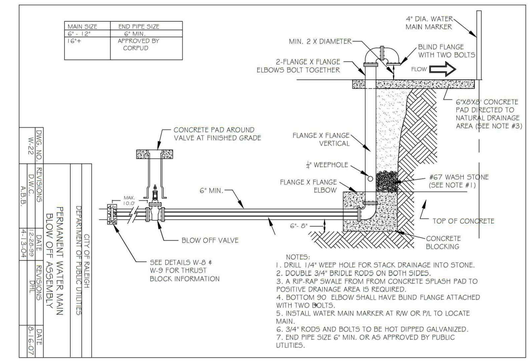

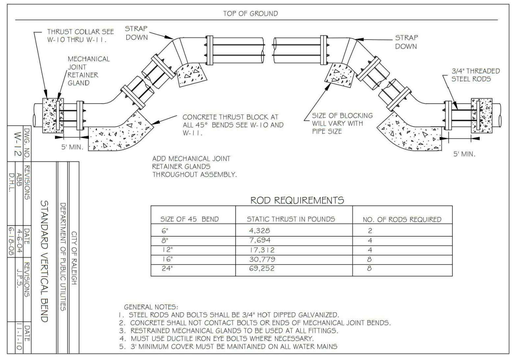

ROD REQUIREMENTS

SIZE OF 45 BEND	STATIC THRUST IN POUNDS	NO. OF RODS REQUIRED
6"	4,326	2
8"	7,694	4
12"	17,312	4
16"	30,779	6
24"	69,252	8

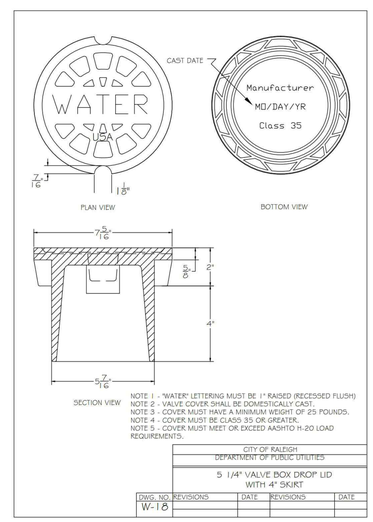

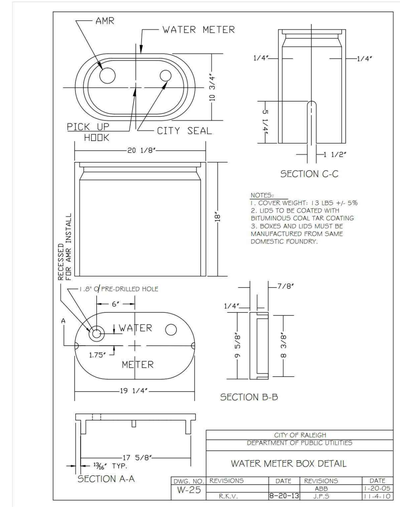

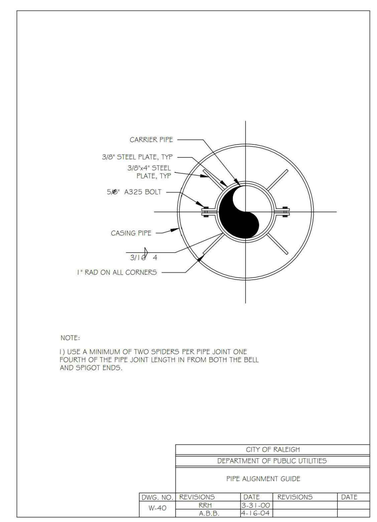

McADAMS
The John R. McAdams Company, Inc.
621 Hillsborough Street
Suite 500
Raleigh, NC 27603
phone 919. 361. 5000
fax 919. 361. 2269
license number: C-0293, C-187
www.mcadamsco.com

WALLBROOK LANDCO, LLC
3 KEEL STREET, SUITE 2
WRIGHTSVILLE BEACH, NORTH CAROLINA
28480-1709

WALLBROOK
CONSTRUCTION DRAWINGS
ROLESVILLE, NORTH CAROLINA

NORTH CAROLINA PROFESSIONAL SEAL 22630 ENGINEER WILLIAM T. O'DANIEL

W.T. O'Daniel

Digitally signed by William T O'Daniel
Date: 2024.08.30 15:48:16-04'00'

REVISIONS

NO.	DATE	
1	09. 27. 2023	WALL CREEK DRIVE TIE-IN REVISIONS
2	11. 02. 2023	EW-400 REVISION
3	05. 10. 2024	UPDATING SCM B GRADING AND SCM A OUTLET
4	06. 06. 2024	SEWER MANHOLE REVISIONS
5	08. 30. 2024	UPDATED BUILDING FOOTPRINTS AND IMPERVIOUS AREA

PLAN INFORMATION

PROJECT NO.	CPR-19100
FILENAME	CPR19100-CD-D1
CHECKED BY	.
DRAWN BY	.
SCALE	N.T.S.
DATE	05. 22. 2023

SHEET

WATER DETAILS

C8.04

FINAL DRAWING - RELEASED FOR CONSTRUCTION

X:\Projects\CPR\CPR-19100\04-Production\Engineering\Site Plan-Construction Drawing\Current Drawing\CPR19100-CD-D1.dwg, 8/29/2024 1:03:19 PM, Tommy Dabolt

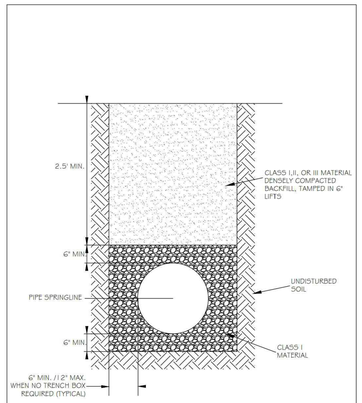

CITY OF RALEIGH
DEPARTMENT OF PUBLIC UTILITIES
STANDARD BEDDING DETAILS FOR CCFRPM PIPES

DWG. NO.	REVISIONS	DATE	REVISIONS	DATE
S-1	J.P.S.	10-8-10		

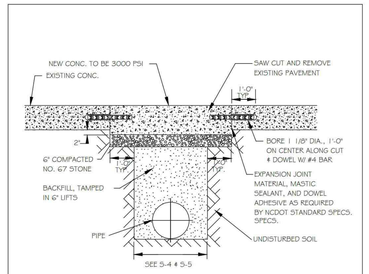

NOTES:
1. See City of Raleigh standards for trenches and pipe bedding (S-4 & S-5) for additional details.
2. Pavement cuts over 5'-0" in width shall be reinforced to N.C.D.O.T. standards.
3. Pavement cuts shall be made with an appropriate saw cut machine.
4. Pavement cuts within NCDOT ROW shall conform to the approved on site encroachment permit.

CITY OF RALEIGH
DEPARTMENT OF PUBLIC UTILITIES
STANDARD CONCRETE PAVEMENT PATCH DETAIL

DWG. NO.	REVISIONS	DATE	REVISIONS	DATE
S-2	D.W.C. RRH	6-23-99 3-30-00	A.B.B. J.P.S.	4-19-04 10-8-10

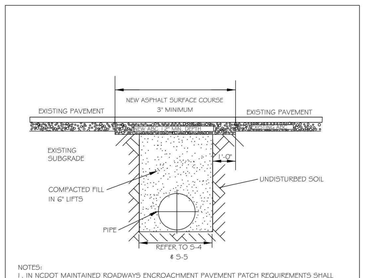

NOTES:
1. IN NCDOT MAINTAINED ROADWAYS ENCROACHMENT PAVEMENT PATCH REQUIREMENTS SHALL TAKE PRECEDENCE.
2. THE PAVEMENT CUT SHALL BE DEFINED BY A STRAIGHT EDGE AND CUT WITH AN APPROPRIATE SAWCUT MACHINE.
3. THE TRENCH SUBGRADE MATERIAL SHALL BE BACKFILLED WITH SUITABLE MATERIAL AND COMPACTED TO A DENSITY OF AT LEAST 95% OF THAT OBTAINED BY COMPACTING A SAMPLE OF THE MATERIAL IN ACCORDANCE WITH AASHTO T-99 AS MODIFIED BY NCDOT.
4. THE FINAL 1' OF FILL SHALL CONSIST OF ABC MATERIAL COMPACTED TO A DENSITY EQUAL TO 100% OF THAT OBTAINED BY COMPACTING A SAMPLE OF THE MATERIAL IN ACCORDANCE WITH AASHTO T-80 AS MODIFIED BY NCDOT.
5. THE ENTIRE THICKNESS AND VERTICAL EDGE OF CUT SHALL BE TACKED.
6. THE SAME DEPTH OF PAVEMENT MATERIAL WHICH EXISTS SHALL BE REINSTALLED, BUT IN NO CASE SHALL THE ASPHALT BE LESS THAN 3" THICK.
7. THE ASPHALT PAVEMENT MATERIAL SHALL BE INSTALLED AND COMPACTED THOROUGHLY WITH A SMOOTH DRUM ROLLER TO ACHIEVE A SMOOTH LEVEL PATCH.
8. REFER TO CITY OF RALEIGH STANDARDS FOR TRENCHES AND PIPE BEDDING (S-4 & S-5) FOR ADDITIONAL DETAILS.
9. NO HAND PATCHING ALLOWED.
10. PAVEMENT CUTS WITHIN NCDOT ROW SHALL CONFORM TO THE APPROVED ON SITE ENCROACHMENT PERMIT.

CITY OF RALEIGH
DEPARTMENT OF PUBLIC UTILITIES
STANDARD ASPHALT PAVEMENT PATCH DETAIL

DWG. NO.	REVISIONS	DATE	REVISIONS	DATE
S-3	D.W.C. RRH	11-1-99 3-30-00	A.B.B. J.P.S.	4-19-04 10-8-10

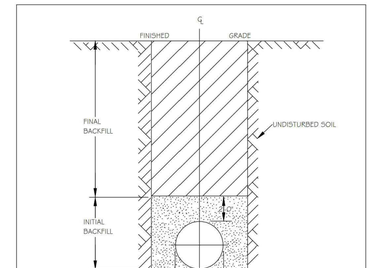

NOTES:
1. TRENCHES REQUIRING SHORING AND BRACING, DIMENSIONS SHALL BE TAKEN FROM THE INSIDE FACE OF THE SHORING AND BRACING.
2. NO ROCKS OR BOULDERS 4" OR LARGER TO BE USED IN INITIAL BACKFILL.
3. ALL BACKFILL MATERIAL SHALL BE SUITABLE NATIVE MATERIAL.
4. BACKFILL SHALL BE TAMPED IN 6" LIFTS IN TRAFFIC AREAS, 12" IN NON-TRAFFIC AREAS.
5. ACHIEVE 60% COMPACTION IN NON-TRAFFIC AREAS, AND 95% COMPACTION IN TRAFFIC AREAS.
6. IF IN EASEMENT 4" TOPSOIL, AND 12" CLEAN SELECT FILL MAY BE REQUIRED.
7. NO BOULDERS 8" IN DIAMETER OR GREATER ALLOWED IN FINAL BACKFILL.

CITY OF RALEIGH
DEPARTMENT OF PUBLIC UTILITIES
TRENCH BOTTOM DIMENSIONS & BACKFILLING REQUIREMENTS FOR DUCTILE IRON

DWG. NO.	REVISIONS	DATE	REVISIONS	DATE
S-4	D.W.C. RRH	9-3-99 3-30-00		

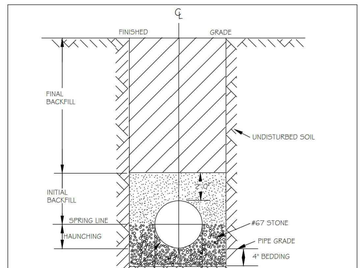

TYPICAL TRENCH BOTTOM DIMENSIONS FOR SDR 35 PVC GRAVITY PIPE

NOTES:
1. FOR TRENCHES REQUIRING SHORING AND BRACING, DIMENSIONS SHALL BE TAKEN FROM THE INSIDE FACE OF THE SHORING AND BRACING.
2. NO ROCKS OR BOULDERS 4" OR LARGER TO BE USED IN INITIAL BACKFILL.
3. ALL BACKFILL MATERIAL SHALL BE SUITABLE NATIVE MATERIAL.
4. BACKFILL SHALL BE TAMPED IN 6" LIFTS IN TRAFFIC AREAS, 12" IN NON-TRAFFIC AREAS.

CITY OF RALEIGH
DEPARTMENT OF PUBLIC UTILITIES
TRENCH BOTTOM DIMENSIONS AND BACKFILLING REQUIREMENTS FOR PVC GRAVITY SEWER MAIN

DWG. NO.	REVISIONS	DATE	REVISIONS	DATE
S-5	TO NOTES	3-1-07 7-2-02	D.W.C. RRH	9-3-99 3-30-00

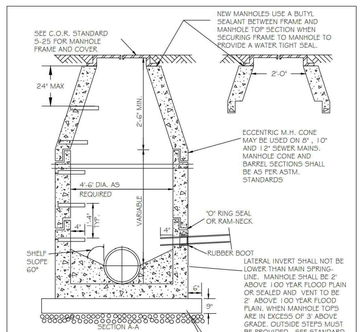

CITY OF RALEIGH
DEPARTMENT OF PUBLIC UTILITIES
STANDARD PRECAST SANITARY SEWER MANHOLE

DWG. NO.	REVISIONS	DATE	REVISIONS	DATE
S-20	Y.C.A. RRH	2-21-02 3-30-00	ABB D.H.L.	2-21-05 6-16-08

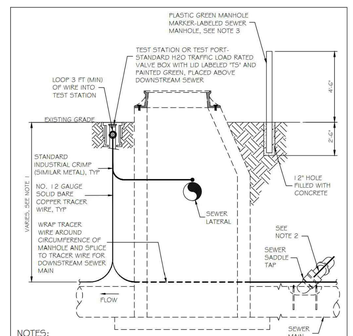

NOTES:
1. THE TRACER WIRE SHALL BE CONTINUOUS TO THE GREATEST EXTENT POSSIBLE. FOR GRAVITY MAIN AND OR LATERAL INSTALLATIONS LESS THAN 8 FT, THE TRACING WIRE SHALL BE ATTACHED TO THE PIPE. TRACER WIRE SHALL BE LAID FLAT AND SECURELY AFFIXED TO THE PIPE AT 10 FOOT INTERVALS. FOR GRAVITY MAIN AND OR LATERAL INSTALLATION DEEPER THAN 8 FT, THE TRACING WIRE SHALL BE INSTALLED AT A DEPTH OF 7-8 FT. THE WIRE SHALL BE PROTECTED FROM DAMAGE DURING THE EXECUTION OF THE WORK. NO BREAKS OF CUTS IN THE TRACER WIRE SHALL BE PERMITTED.
2. WHERE LATERAL TAPS ARE MADE BY SERVICE SADDLES, THE TRACER WIRE SHALL NOT BE ALLOWED TO TO BE PLACED BETWEEN THE SADDLE AND MAIN.
3. MANHOLE MARKERS SHALL BE PLACED ADJACENT TO MANHOLES AT THE DISCRETION OF OWNER OR OWNERS REPRESENTATIVE.

CITY OF RALEIGH
DEPARTMENT OF PUBLIC UTILITIES
GRAVITY SEWER MAIN TRACER WIRE AND MANHOLE MARKER

DWG. NO.	REVISIONS	DATE	REVISIONS	DATE
S-20A	MKD	08-14		

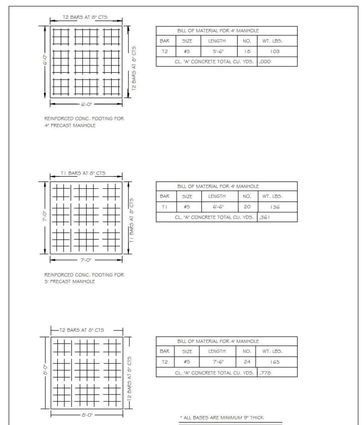

BILL OF MATERIAL FOR 4' MANHOLE

BAR	SIZE	LENGTH	NO.	WT. LBS.
12	#5	5'-6"	16	103
CL. "A" CONCRETE TOTAL CU. YDS.				.000

BILL OF MATERIAL FOR 4' MANHOLE

BAR	SIZE	LENGTH	NO.	WT. LBS.
11	#5	6'-6"	20	136
CL. "A" CONCRETE TOTAL CU. YDS.				.54 *

BILL OF MATERIAL FOR 4' MANHOLE

BAR	SIZE	LENGTH	NO.	WT. LBS.
12	#5	7'-6"	24	145
CL. "A" CONCRETE TOTAL CU. YDS.				.776

* ALL BASES ARE MINIMUM 9" THICK

CITY OF RALEIGH
DEPARTMENT OF PUBLIC UTILITIES
EXTENDED BASE OR CAST-IN-PLACE REINFORCED CONCRETE BASE

DWG. NO.	REVISIONS	DATE	REVISIONS	DATE
S-21	RRH	3-1-07 3-30-00	ABB	2-9-05

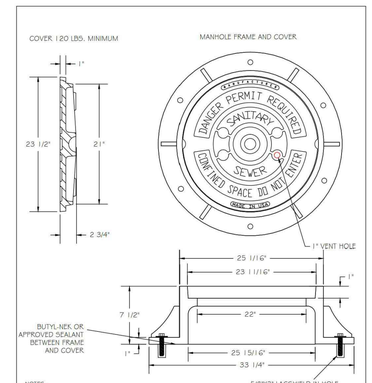

NOTES:
1) ALL MANHOLE FRAMES SHALL BE DOMESTICALLY CAST.
2) FRAME SHALL BE A MINIMUM WEIGHT OF 162 LBS. WITHIN PUBLIC ROW AND 140 LBS. WITHIN EASEMENTS.
3) COVER SHALL WEIGH A MIN. OF 120 LBS.
4) ALL MANHOLE FRAMES OUTSIDE OF PAVED SURFACES SHALL BE BOLTED TO THE CONE SECTION OR RING WITH A MINIMUM OF 4 BOLTS PER FRAME.

5/8"X3" LAGSHIELD IN HOLE DRILLED INTO CONE OR RING WITH ANCHOR SUNK TO DESIGN DEPTH, AND 3/8"X3" HOT DIPPED GALVANIZED LAG BOLT AND WASHER.

CITY OF RALEIGH
DEPARTMENT OF PUBLIC UTILITIES
STANDARD MANHOLE COVER

DWG. NO.	REVISIONS	DATE	REVISIONS	DATE
S-25	3-1-07 RRH	3-1-07 3-30-00	A.B.B. D.H.L.	2-9-05 6-18-08

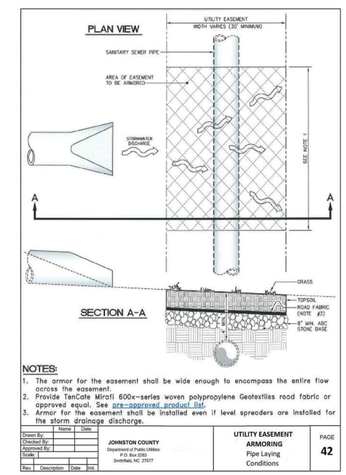

NOTES:
1. The armor for the easement shall be wide enough to encompass the entire flow across the easement.
2. Provide TenCate Mirafi 600x-series woven polypropylene Geotextiles road fabric or approved equal. See pre-approved product list.
3. Armor for the easement shall be installed even if level spreaders are installed for the storm drainage discharge.

Drawn By:		Date
Checked By:		
Approved By:		
Scale:		

Rev.	Description	Date	Init.

JOHNSTON COUNTY
Department of Public Utilities
P.O. Box 2063
Smithfield, NC 27577

UTILITY EASEMENT ARMORING
Pipe Laying Conditions

PAGE 42

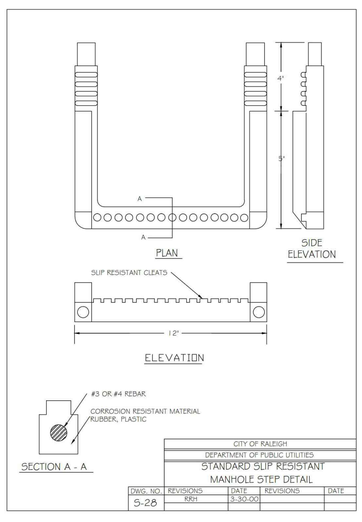

CITY OF RALEIGH
DEPARTMENT OF PUBLIC UTILITIES
STANDARD SLIP RESISTANT MANHOLE STEP DETAIL

DWG. NO.	REVISIONS	DATE	REVISIONS	DATE
S-28	RRH	3-30-00		

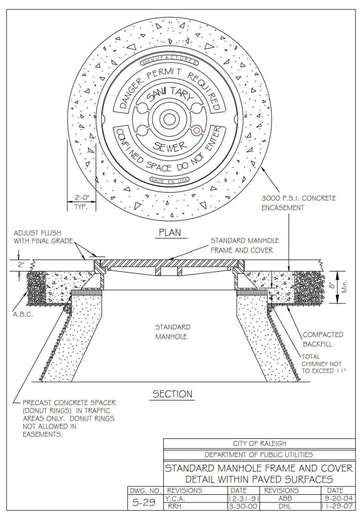

CITY OF RALEIGH
DEPARTMENT OF PUBLIC UTILITIES
STANDARD MANHOLE FRAME AND COVER DETAIL WITHIN PAVED SURFACES

DWG. NO.	REVISIONS	DATE	REVISIONS	DATE
S-29	Y.C.A. RRH	12-31-91 3-30-00	ABB DHL	9-20-04 1-29-07

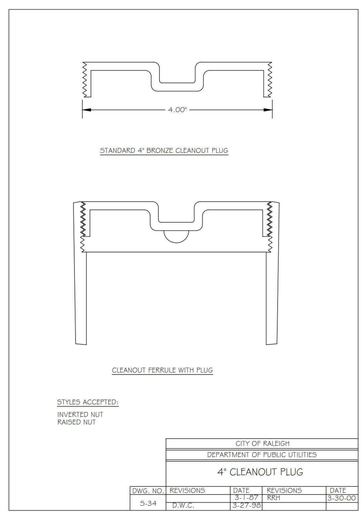

CITY OF RALEIGH
DEPARTMENT OF PUBLIC UTILITIES
4" CLEANOUT PLUG

DWG. NO.	REVISIONS	DATE	REVISIONS	DATE
S-34	D.W.C.	3-1-07 3-27-96	RRH	3-30-00

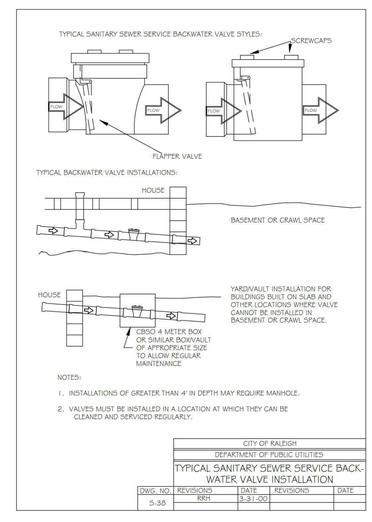

NOTES:
1. INSTALLATIONS OF GREATER THAN 4' IN DEPTH MAY REQUIRE MANHOLE.
2. VALVES MUST BE INSTALLED IN A LOCATION AT WHICH THEY CAN BE CLEANED AND SERVICED REGULARLY.

CITY OF RALEIGH
DEPARTMENT OF PUBLIC UTILITIES
TYPICAL SANITARY SEWER SERVICE BACK-WATER VALVE INSTALLATION

DWG. NO.	REVISIONS	DATE	REVISIONS	DATE
S-35	RRH	3-31-00		

FINAL DRAWING - RELEASED FOR CONSTRUCTION

MCADAMS
The John R. McAdams Company, Inc.
621 Hillsborough Street
Suite 500
Raleigh, NC 27603
phone 919. 361. 5000
fax 919. 361. 2269
license number: C-0293, C-187
www.mcadamsco.com

WALLBROOK LANDCO, LLC
3 KEEL STREET, SUITE 2
WRIGHTSVILLE BEACH, NORTH CAROLINA
28480-1709

WALLBROOK
CONSTRUCTION DRAWINGS
ROLESVILLE, NORTH CAROLINA

NORTH CAROLINA PROFESSIONAL SEAL 22630 ENGINEER WILLIAM T. O'DANIEL

W.T. O'Daniel
Digitally signed by William T O'Daniel
Date: 2024.08.30 15:48:17-04'00'

REVISIONS

NO.	DATE	
1	09. 27. 2023	WALL CREEK DRIVE TIE-IN REVISIONS
2	11. 02. 2023	EW-400 REVISION
3	05. 10. 2024	UPDATING SCM B GRADING AND SCM A OUTLET
4	06. 06. 2024	SEWER MANHOLE REVISIONS
5	08. 30. 2024	UPDATED BUILDING FOOTPRINTS AND IMPERVIOUS AREA

PLAN INFORMATION

PROJECT NO.	CPR-19100
FILENAME	CPR19100-CD-D1
CHECKED BY	.
DRAWN BY	.
SCALE	N.T.S.
DATE	05. 22. 2023

SHEET

SEWER DETAILS

C8.05

X:\Projects\CPR\CPR-19100\04-Production\Engineering\Site Plan-Construction Drawings\Current Drawing\CPR19100-CD-D1.dwg, 8/29/2024 1:03:40 PM, Tommy Dalbolt

AERIAL PIPE CROSSING

GENERAL NOTES:

1. ALL MATERIALS UTILIZED ON THESE DETAIL SHEETS SHALL CONFORM TO THE APPROPRIATE SECTIONS OF THE CITY OF RALEIGH PUBLIC UTILITIES HANDBOOK UNLESS NOTED OTHERWISE HEREIN.
2. RESTRAINED JOINT PIPE AND FITTINGS SHALL CONSIST OF BOLTED RETAINER RINGS AND WELDED RETAINER BARS OR BOLTLESS TYPE WHICH INCLUDE DUCTILE IRON LOCKING SEGMENTS AND RUBBER RETAINERS. BOLTS FOR RESTRAINED JOINTS (IF APPLICABLE) SHALL CONFORM TO ANSI B18.2. RESTRAINED PIPE AND FITTINGS SHALL BE FLEX-RING OR LOK-RING TYPE JOINTS AS MANUFACTURED BY AMERICAN CAST IRON PIPE CO.; TR FLEX AS MANUFACTURED BY US PIPE, SUPER-LOCK AS MANUFACTURED BY CLOW, BOLT-LOK OR SNAP-LOK AS MANUFACTURED BY GRIFFIN PIPE PRODUCTS, OR EQUAL.
3. CONCRETE PROPERTIES SHALL BE AS FOLLOWS:
   CONCRETE COMPRESSIVE STRENGTH = 4000 PSI
   NOMINAL SLUMP = 4 INCHES
   WATER/CEMENTITOUS MATERIALS RATIO = 0.45 (MAX)
   AIR CONTENT = 6% * 1.5%
   CONCRETE SHALL BE COMPOSED OF CEMENT, WATER, COARSE AGGREGATES, FINE AGGREGATES AND AIR. CEMENT SHALL BE TYPE I/II OR II IN ACCORDANCE WITH ASTM C-150. MATERIAL REQUIREMENTS FOR ALL FINE AND COARSE AGGREGATES SHALL CONFORM TO ASTM C-33. COARSE AGGREGATE SHALL BE SIZE No. 57 OR 67. AN APPROVED CLASS 'F' FLYASH MAY BE SUBSTITUTED FOR AN EQUAL AMOUNT OF CEMENT BY WEIGHT UP TO 25%.
4. ALL EXPOSED CONCRETE CORNERS SHALL BE CHAMFERED 3/4".
5. CONVENTIONAL REINFORCING STEEL SHALL CONFORM TO ASTM A615 GRADE 60 AND SHALL BE PLACED IN ACCORDANCE WITH "RECOMMENDED PRACTICE FOR PLACING REINFORCING BARS" (LATEST EDITION) AS PUBLISHED BY THE CONCRETE REINFORCING INSTITUTE. SPLICES SHALL BE CLASS 'B' CONFORMING TO THE PROVISIONS OF ACI 318 - "BUILDING CODE REQUIREMENTS FOR REINFORCED CONCRETE".
6. NEOPRENE BEARING PADS SHALL BE FORMED FROM PREVIOUSLY UNVULCANIZED, 100% VIRGIN NEOPRENE, WITH DUROMETER HARDNESS = 50.
7. PILES SHALL BE STRUCTURAL STEEL HP12x53 PILES AND SHALL CONFORM TO THE REQUIREMENTS OF ASTM A36. PILES SHALL BE DRIVEN TO DEPTHS REQUIRED TO OBTAIN AN ULTIMATE BEARING CAPACITY OF NOT LESS THAN TWO TIMES THE DESIGN LOADING OF 30 TONS. PILES SHALL PENETRATE A MINIMUM OF FIFTEEN FEET INTO UNDISTURBED SOIL. IN DRIVING PILES, A METHOD APPROVED BY THE ENGINEER SHALL BE USED WHEREBY THE HEAD OF THE PILE IS NOT DAMAGED. IF REQUESTED BY THE ENGINEER, PILES SHALL BE TESTED TO DETERMINE THE ULTIMATE CAPACITY OF THE PILES. THE METHOD OF LOAD TESTING SHALL CONFORM TO ASTM D1143 AND THE NORTH CAROLINA STATE BUILDING CODE. WHERE PILES ARE EXPOSED, PILES SHALL BE PAINTED AND/OR COATED IN ACCORDANCE WITH THE CITY SPECIFICATIONS.

CITY OF RALEIGH
DEPARTMENT OF PUBLIC UTILITIES
AERIAL PIPE CROSSING
GENERAL NOTES

DWG. NO.	REVISIONS	DATE	REVISIONS	DATE
S-10	D.H.L.	6/16/08		

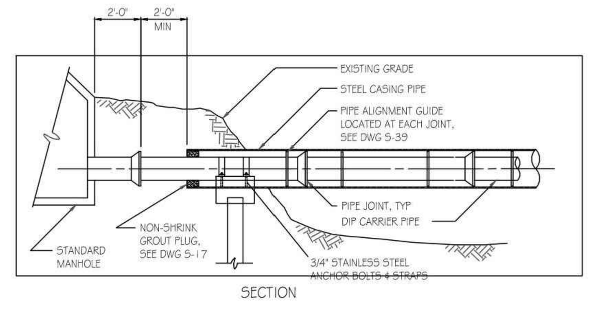

SECTION

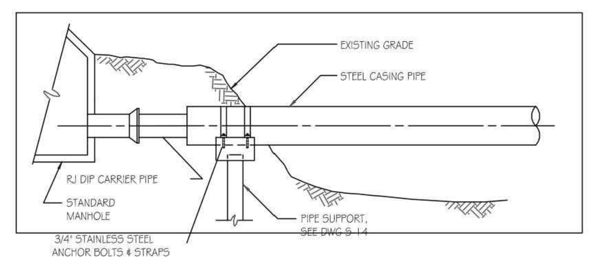

ELEVATION

CITY OF RALEIGH
DEPARTMENT OF PUBLIC UTILITIES
AERIAL PIPE CROSSING
TYPICAL PIPE SECTION & ELEVATION

DWG. NO.	REVISIONS	DATE	REVISIONS	DATE
S-13	D.H.L.	6/16/08		

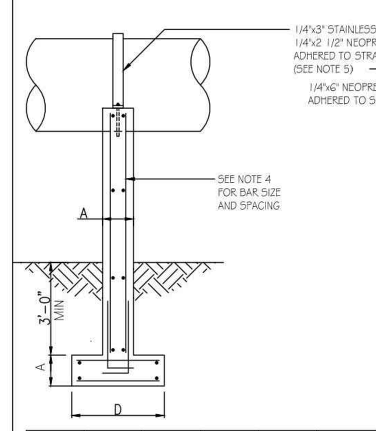

CASING PIPE DIA. "D" (IN.)	"H" (FT.)	THICKNESS "A" (IN.)	PIER WIDTH "B" (FT.)	FOOTING LENGTH "C" (FT.)	FOOTING WIDTH "D" (FT.)
6-12	≤6	12	2'-4"	5'-6"	3'-0"
	8	12	2'-4"	6'-3"	3'-0"
	10	12	2'-4"	6'-8"	3'-0"
	12	12	2'-4"	7'-2"	3'-0"
14-20	≤6	12	3'-0"	8'-0"	3'-0"
	8	12	3'-0"	9'-0"	3'-0"
	10	12	3'-0"	9'-10"	3'-0"
	12	14	3'-0"	10'-6"	3'-0"
22-28	≤6	14	3'-8"	8'-9"	4'-0"
	8	14	3'-8"	10'-0"	4'-0"
	10	14	3'-8"	11'-0"	4'-0"
	12	14	3'-8"	11'-10"	4'-0"
30-36	≤6	18	4'-4"	9'-0"	4'-0"
	8	18	4'-4"	10'-6"	4'-0"
	10	18	4'-4"	11'-6"	4'-0"
	12	18	4'-4"	12'-4"	4'-0"
38-48	≤6	18	5'-4"	9'-6"	5'-0"
	8	18	5'-4"	11'-0"	5'-0"
	10	18	5'-4"	12'-0"	5'-0"
	12	18	5'-4"	12'-10"	5'-0"
51-56	≤6	18	6'-4"	9'-10"	5'-0"
	8	18	6'-4"	11'-4"	5'-0"
	10	18	6'-4"	12'-4"	5'-0"
	12	18	6'-4"	13'-2"	5'-0"

NOTES:
1. SHALLOW FOUNDATION DESIGN SHOWN ON THIS DETAIL IS BASED ON THE FOLLOWING PARAMETERS:
   ALLOWABLE SOIL BEARING CAPACITY = 2000 PSF
   CONCRETE COMPRESSIVE STRENGTH = 4000 PSI
   GRADE 60 REINFORCING STEEL
   MAXIMUM STREAM VELOCITY = 10 FT/SEC
   MAXIMUM SUPPORT HEIGHT (H) = 12'-0"
   IF FIELD CONDITIONS REQUIRE ANY DEVIATION FROM THESE PARAMETERS, THE FOUNDATION DESIGN SHALL BE REVIEWED BY THE ENGINEER.
2. IF SUBGRADE AT LOCATION OF SUPPORTS IS DEEMED UNABLE TO WITHSTAND 2000 PSF BEARING PRESSURE, A PILE SUPPORTED FOUNDATION SHALL BE UTILIZED AS PER DRAWING S-15.
3. IF BEDROCK IS ENCOUNTERED WHICH WILL PREVENT 3-FEET MINIMUM COVER OVER FOOTING, DOWELS SHALL BE DRILLED INTO BEDROCK PRIOR TO PLACING FOUNDATION. SEE DRAWING S-17.
4. TWELVE-INCH AND FOURTEEN-INCH THICK PIERS AND FOOTINGS SHALL BE REINFORCED WITH #5 BARS AT 12 INCHES OC IN EACH DIRECTION ON EACH FACE. EIGHTEEN-INCH WIDE PIERS AND FOOTINGS SHALL BE REINFORCED WITH #7 BARS AT 12 INCHES OC IN EACH DIRECTION ON EACH FACE.
5. EIGHTEEN-INCH THICK PIERS SHALL REQUIRE TWO STRAPS OVER THE PIPE INSTEAD OF ONE (AS SHOWN).
6. WHEN CONCRETE SUPPORTS ARE REQUIRED TO BE LOCATED WITHIN A STREAM AND ARE NOT COVERED WITH BACKFILL, SEE DRAWING S-19 FOR MODIFICATIONS TO UPSTREAM FACE OF SUPPORT.

CITY OF RALEIGH
DEPARTMENT OF PUBLIC UTILITIES
AERIAL PIPE CROSSING
CONCRETE PIER DETAIL

DWG. NO.	REVISIONS	DATE	REVISIONS	DATE
S-14	D.H.L.	6/16/08		

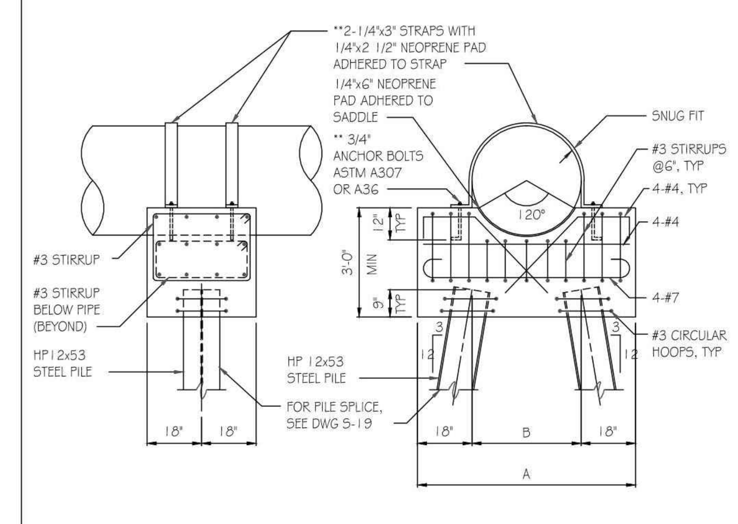

WIDTH OF PILE CAP		
CASING PIPE DIAMETER (IN.)	TOTAL WIDTH "A" (FT.)	PILE SPACING "B" (FT.)
≤ 36	6'-0"	3'-0"
38-42	6'-6"	3'-6"
45-51	7'-3"	4'-3"
54-60	8'-0"	5'-0"

NOTES:
1. PILE SUPPORTED FOUNDATION DESIGN SHOWN ON THIS DETAIL IS BASED UPON THE FOLLOWING PARAMETERS:
   MINIMUM CAPACITY OF HP12x53 PILE = 30 TONS
   CONCRETE COMPRESSIVE STRENGTH = 4000 PSI
   GRADE 60 REINFORCING STEEL
   MAXIMUM STREAM VELOCITY = 10 FT/SEC
   IF FIELD CONDITIONS REQUIRE ANY DEVIATION FROM THESE PARAMETERS, FOUNDATION DESIGN SHALL BE REVIEWED BY THE PROJECT ENGINEER.
2. LENGTH OF PILES SHALL BE AS REQUIRED TO DEVELOP 30 TON CAPACITY BY EITHER END BEARING, FRICTION OR A COMBINATION OF END BEARING AND FRICTION. AS A MINIMUM, PILES SHALL BE DRIVEN AT LEAST 15 FEET INTO UNDISTURBED SOIL.

**3. ANCHOR BOLTS AND STRAPS SHALL BE STAINLESS STEEL.

CITY OF RALEIGH
DEPARTMENT OF PUBLIC UTILITIES
AERIAL PIPE CROSSING
PILE CAP DETAIL

DWG. NO.	REVISIONS	DATE	REVISIONS	DATE
S-15	D.H.L.	6/16/08		

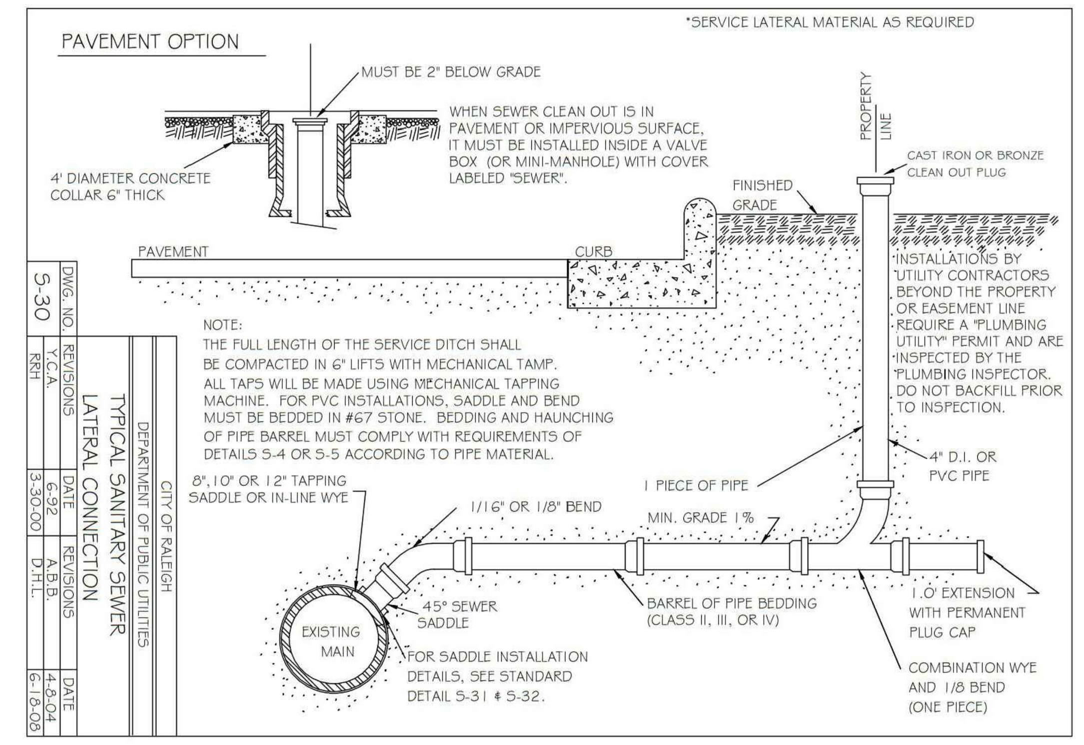

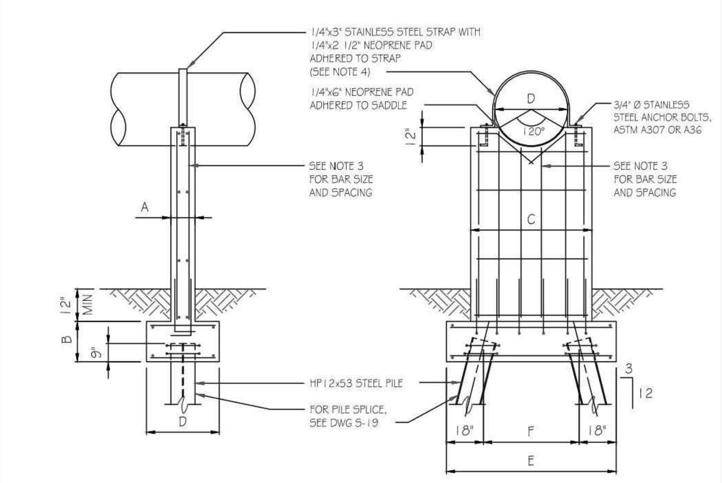

NOTES:
1. PILE SUPPORTED PIER FOUNDATION DESIGN SHOWN ON THIS DETAIL IS BASED ON THE FOLLOWING PARAMETERS:
   MINIMUM CAPACITY OF HP12x53 PILE = 30 TONS
   CONCRETE COMPRESSIVE STRENGTH = 4000 PSI
   GRADE 60 REINFORCING STEEL
   MAXIMUM STREAM VELOCITY = 10 FT/SEC
   IF FIELD CONDITIONS REQUIRE ANY DEVIATION FROM THESE PARAMETERS, THE FOUNDATION DESIGN SHALL BE REVIEWED BY THE ENGINEER.
2. LENGTH OF PILES SHALL BE AS REQUIRED TO DEVELOP 30 TON CAPACITY BY EITHER END BEARING, FRICTION OR A COMBINATION OF END BEARING AND FRICTION. AS A MINIMUM, PILES SHALL BE DRIVEN AT LEAST 15 FEET INTO UNDISTURBED SOIL.
3. TWELVE-INCH AND FOURTEEN-INCH WIDE PIERS SHALL BE REINFORCED WITH #5 BARS AT 12 INCHES OC IN EACH DIRECTION ON EACH FACE. EIGHTEEN-INCH WIDE PIERS SHALL BE REINFORCED WITH #7 BARS AT 12 INCHES OC IN EACH DIRECTION ON EACH FACE. FOOTINGS SHALL BE REINFORCED TYPICALLY TO PIERS.
4. EIGHTEEN-INCH WIDE PIERS SHALL REQUIRE TWO STRAPS OVER THE PIPE INSTEAD OF ONE (AS SHOWN).
5. WHEN CONCRETE SUPPORTS ARE REQUIRED TO BE LOCATED WITHIN A STREAM AND ARE NOT COVERED WITH BACKFILL, SEE DRAWING S-19 FOR MODIFICATIONS TO UPSTREAM FACE OF SUPPORT.

CASING PIPE DIA. "D" (IN.)	PIER THICKNESS "A" (IN.)	FOOTING THICKNESS "B" (IN.)	PIER WIDTH "C" (FT.)	FOOTING WIDTH "D" (FT.)	FOOTING LENGTH "E" (FT.)	PILE SPACING "F" (FT.)
6-12	12	20	2'-4"	3'-0"	6'-0"	3'-0"
14-20	12	20	3'-0"	3'-0"	8'-0"	5'-0"
22-28	18	26	3'-8"	4'-0"	8'-9"	5'-9"
30-36	18	26	4'-4"	4'-0"	9'-0"	6'-0"
38-48	18	26	5'-4"	5'-0"	9'-6"	6'-6"
51-60	18	26	6'-4"	5'-0"	9'-10"	6'-10"

CITY OF RALEIGH
DEPARTMENT OF PUBLIC UTILITIES
AERIAL PIPE CROSSING
PILE SUPPORTED PIER DETAIL

DWG. NO.	REVISIONS	DATE	REVISIONS	DATE
S-16	D.H.L.	6/16/08		

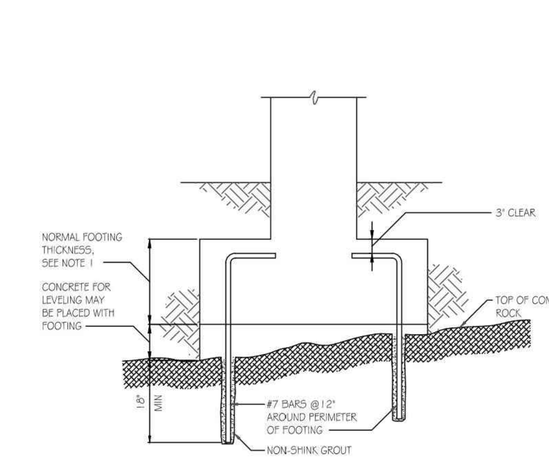

NOTES:
1. GEOMETRY OF FOOTING SHALL MATCH GEOMETRY OF CONCRETE PIERS WITH HEIGHT OF 6 FEET OR LESS AS PER DRAWING S-14.
2. NON-SHRINK GROUT SHALL BE "EUCO-N-S" BY THE EUCLID CHEMICAL COMPANY; "MASTERFLOW 713" BY MASTER BULDERS, OR EQUAL.

CITY OF RALEIGH
DEPARTMENT OF PUBLIC UTILITIES
AERIAL PIPE CROSSING
CONCRETE PIER ON BEDROCK

DWG. NO.	REVISIONS	DATE	REVISIONS	DATE
S-17				

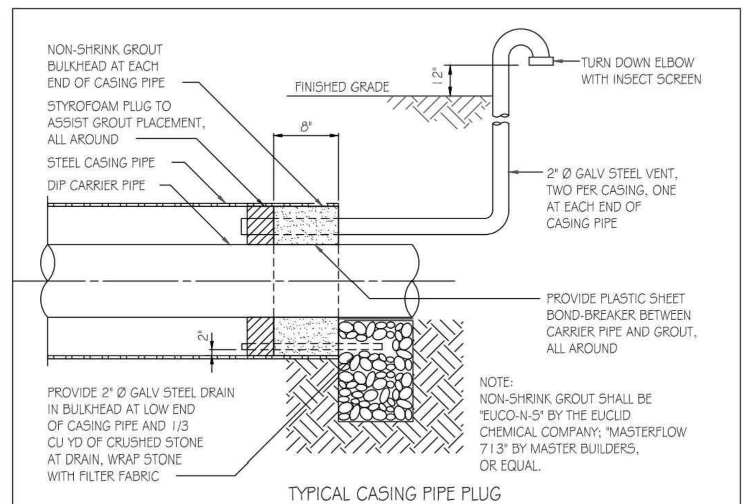

TYPICAL CASING PIPE PLUG

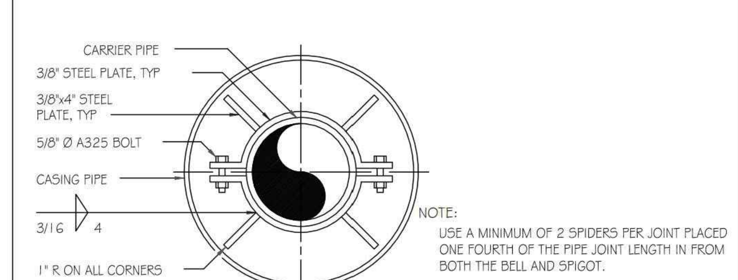

PIPE ALIGNMENT GUIDE

CITY OF RALEIGH
DEPARTMENT OF PUBLIC UTILITIES
AERIAL PIPE CROSSING
CASING PIPE DETAILS

DWG. NO.	REVISIONS	DATE	REVISIONS	DATE
S-18	A.B.B. D.H.L.	4-16-04 6-18-08		

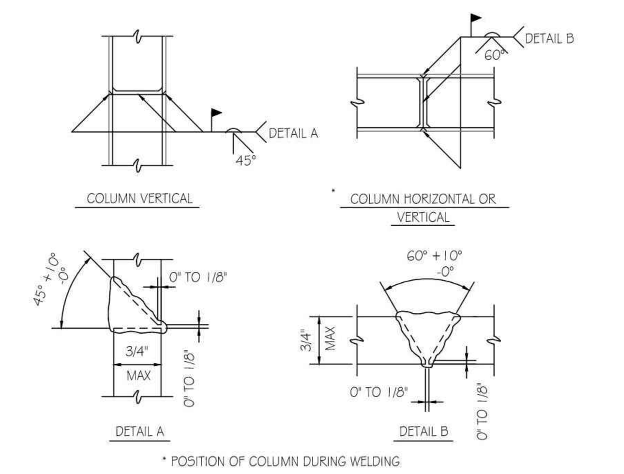

STEEL PILE SPLICE

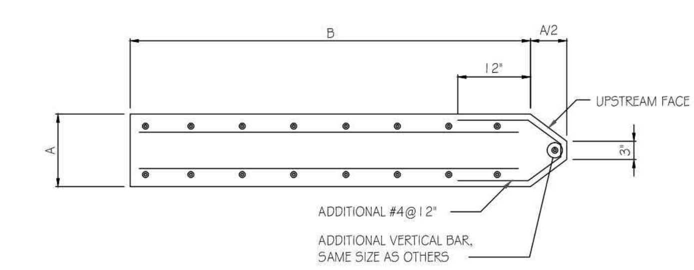

PLAN - CONCRETE SUPPORT NOSING
(WHEN EXPOSED TO STREAM FLOW)

CITY OF RALEIGH
DEPARTMENT OF PUBLIC UTILITIES
AERIAL PIPE CROSSING
CONCRETE SUPPORT DETAILS

DWG. NO.	REVISIONS	DATE	REVISIONS	DATE
S-19	D.H.L.	6/16/08		

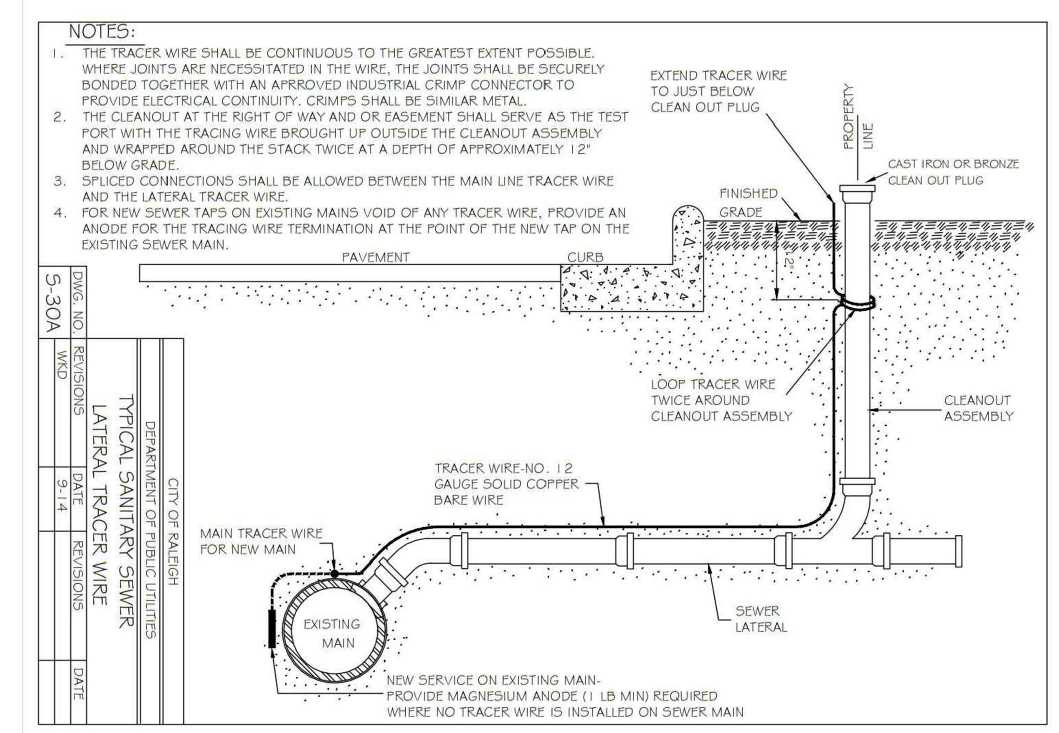

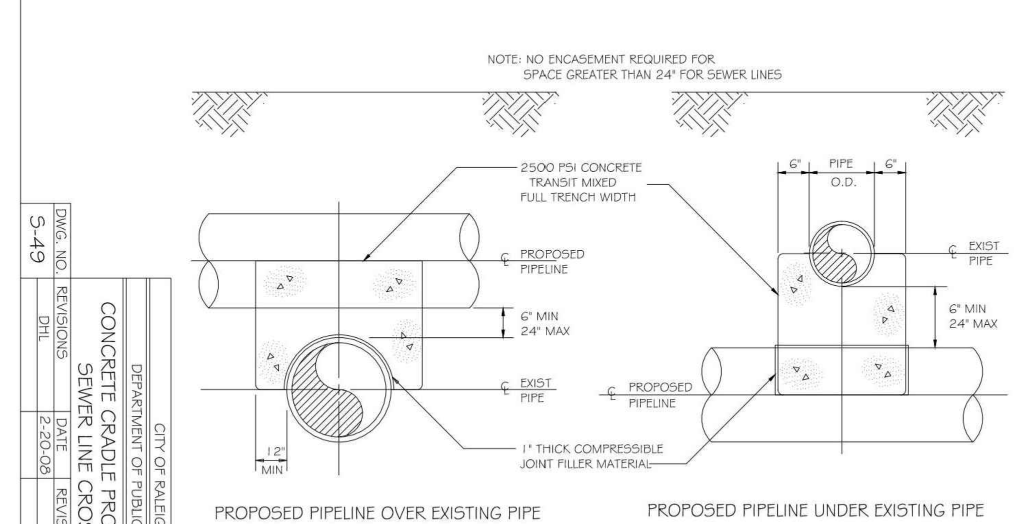

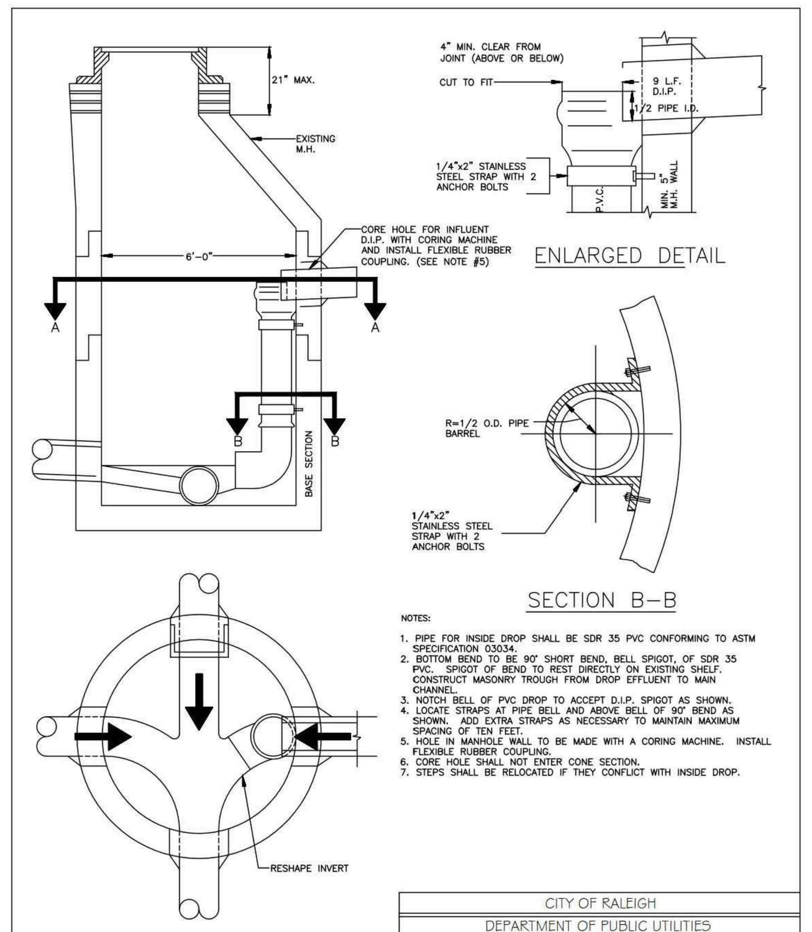

NOTES:
1. PIPE FOR INSIDE DROP SHALL BE SDR 35 PVC CONFORMING TO ASTM SPECIFICATION 03034.
2. BOTTOM BEND TO BE 90° SHORT BEND, BELL SPIGOT, OF SDR 35 PVC. SPIGOT OF BEND TO REST DIRECTLY ON EXISTING SHELF. CONSTRUCT MASONRY TROUGH FROM DROP EFFLUENT TO MAIN CHANNEL.
3. NOTCH BELL OF PVC DROP TO ACCEPT D.I.P. SPIGOT AS SHOWN.
4. LOCATE STRAPS AT PIPE BELL AND ABOVE BELL OF 90° BEND AS SHOWN. ADD EXTRA STRAPS AS NECESSARY TO MAINTAIN MAXIMUM SPACING OF TEN FEET.
5. HOLE IN MANHOLE WALL TO BE MADE WITH A CORING MACHINE. INSTALL FLEXIBLE RUBBER COUPLING.
6. CORE HOLE SHALL NOT ENTER CONE SECTION.
7. STEPS SHALL BE RELOCATED IF THEY CONFLICT WITH INSIDE DROP.

CITY OF RALEIGH
DEPARTMENT OF PUBLIC UTILITIES
INSIDE DROP MANHOLE

DWG. NO.	REVISIONS	DATE	REVISIONS	DATE
S-53	MAB	11-6-13		

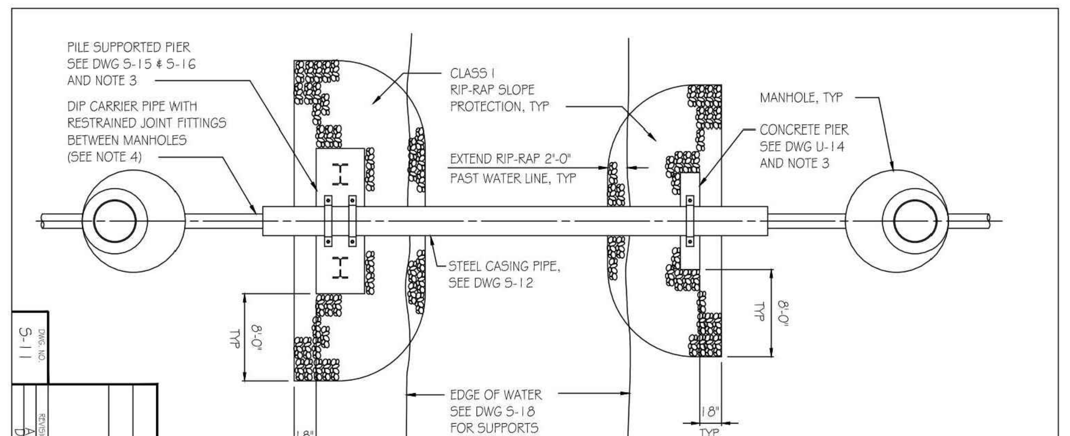

NOTES:
1. RIP RAP FOR SLOPE PROTECTION SHALL BE CLASS I RIP RAP IN ACCORDANCE WITH SECTION 868 OF THE NORTH CAROLINA DEPARTMENT OF TRANSPORTATION'S "STANDARD SPECIFICATIONS FOR ROADS AND BRIDGES".
2. RIP RAP SHALL BE PLACED IN ACCORDANCE WITH DRAWING 868.01 OF THE NORTH CAROLINA DEPARTMENT OF TRANSPORTATION'S "ROADWAY STANDARD DRAWINGS".
3. SUPPORT TYPE FOR PIERS SHALL BE DETERMINED BY ENGINEER BASED ON SUBGRADE CONDITIONS AT SITE. SEE DRAWING S-14 FOR SUBGRADE PARAMETERS FOR EACH TYPE OF FOUNDATION.
4. WHERE DUCTILE IRON PIPE IS USED FOR CARRIER PIPE, DUCTILE IRON CARRIER PIPE SHALL BE INSTALLED UTILIZING 2 PIPE ALIGNMENT GUIDES PER JOINT ONE FOURTH OF THE PIPE JOINT LENGTH IN FROM BOTH THE BELL AND SPIGOT ENDS.

CITY OF RALEIGH
DEPARTMENT OF PUBLIC UTILITIES
AERIAL PIPE CROSSING
TYPICAL PLAN

DWG. NO.	REVISIONS	DATE	REVISIONS	DATE
S-11	A.B.B. D.H.L.	4-16-04 6/16/08		

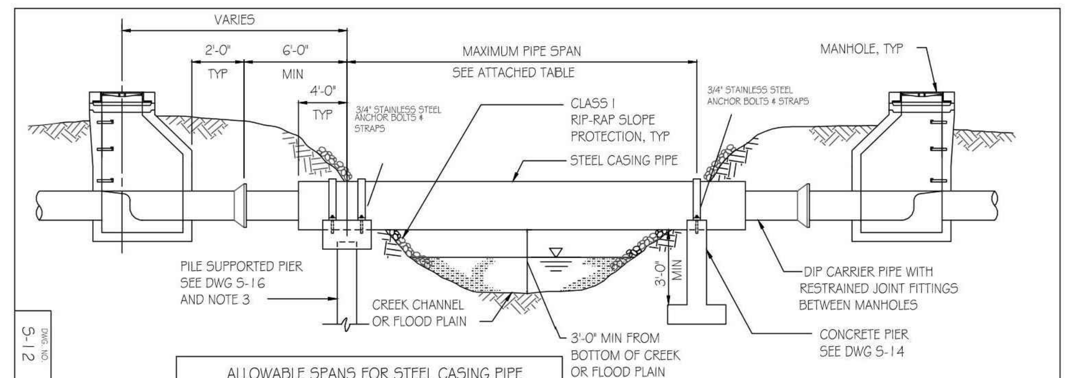

ALLOWABLE SPANS FOR STEEL CASING PIPE

CARRIER PIPE, DIP DIAMETER (IN.)	CASING PIPE, STEEL DIAMETER (IN.)	MINIMUM CASING PIPE WALL THICKNESS (IN.)	ALLOWABLE SPAN (FT.)
6	14	0.3750	40
8	16	0.3750	45
10	18	0.3750	50
12	20	0.3750	50
14	24	0.3750	55
16	26	0.3750	55
18	30	0.3750	60
20	32	0.3750	60
24	36	0.4375	65
30	42	0.4375	65
36	48	0.500	65
42	56	0.5000	65

NOTES:
1. STEEL PIPE SHALL BE EITHER SPIRAL WELDED OR SMOOTH WALL SEAMLESS WITH A MINIMUM YIELD STRENGTH OF 35,000 PSI. PAINTING AND LINING SHALL BE AS REQUIRED BY THE CITY OF RALEIGH PUBLIC UTILITIES HANDBOOK.
2. DUCTILE IRON PIPE SHALL BE SUPPORTED WITH TWO SPIDERS AT EVERY JOINT WITHIN THE CASING PIPE USING APPROVED PIPE ALIGNMENT GUIDE. SEE DRAWING S-39. ALL JOINTS SHALL BE RESTRAINED JOINT. SEE NOTE 2, DWG S-10.
3. SUPPORT TYPE FOR PIERS SHALL BE DETERMINED BY ENGINEER BASED ON SUBGRADE CONDITIONS AT SITE. SEE DRAWING S-14 FOR SUBGRADE PARAMETERS FOR EACH TYPE OF FOUNDATION. SEE DRAWING S-19 FOR SUPPORTS PLACED WITHIN STREAM.
4. BOTTOM OF PIPE TO BE AT A MINIMUM OF 1' ABOVE THE 25 YEAR FLOOD ELEVATION.

CITY OF RALEIGH
DEPARTMENT OF PUBLIC UTILITIES
AERIAL PIPE CROSSING
STEEL CASING PIPE ELEVATION

DWG. NO.	REVISIONS	DATE	REVISIONS	DATE
S-12	D.H.L.	6/16/08		

McADAMS
The John R. McAdams Company, Inc.
621 Hillsborough Street
Suite 500
Raleigh, NC 27603
phone 919. 361. 5000
fax 919. 361. 2269
license number: C-0293, C-187
www.mcadamsco.com

WALLBROOK LANDCO, LLC
3 KEEL STREET, SUITE 2
WRIGHTSVILLE BEACH, NORTH CAROLINA
28480-1709

WALLBROOK
CONSTRUCTION DRAWINGS
ROLESVILLE, NORTH CAROLINA

Digitally signed by William T O'Daniel
Date: 2024.08.30 15:48:19-04'00'

REVISIONS

NO.	DATE	
1	09. 27. 2023	WALL CREEK DRIVE TIE-IN REVISIONS
2	11. 02. 2023	EW-400 REVISION
3	05. 10. 2024	UPDATING SCM B GRADING AND SCM A OUTLET
4	06. 06. 2024	SEWER MANHOLE REVISIONS
5	08. 30. 2024	UPDATED BUILDING FOOTPRINTS AND IMPERVIOUS AREA

PLAN INFORMATION

PROJECT NO.	CPR-19100
FILENAME	CPR19100-CD-D1
CHECKED BY	.
DRAWN BY	.
SCALE	N.T.S.
DATE	05. 22. 2023

SHEET

SEWER DETAILS

C8.06

FINAL DRAWING - RELEASED FOR CONSTRUCTION

X:\Projects\CPR\CPR-19100\04-Production\Engineering\Site Plan-Construction Drawings\Current Drawings\CPR19100-CD-D1.dwg, 8/29/2024 1:03:58 PM, Tommy Dabolt

STORMWATER CONTROL MEASURE 'A' CONSTRUCTION SPECIFICATIONS

GENERAL NOTES

1. PRIOR TO CONSTRUCTION, ANY DISCREPANCIES IN THE PLANS AND NOTES SHALL BE BROUGHT TO THE DESIGN ENGINEER'S ATTENTION IMMEDIATELY.

2. THE PROJECT WILL MEET ALL OF THE REQUIREMENTS RELATIVE TO BEST MANAGEMENT PRACTICES AND ENGINEERED STORMWATER CONTROL STRUCTURES AS OUTLINED IN THE NORTH CAROLINA DEPARTMENT OF ENVIRONMENTAL QUALITY STORMWATER DESIGN MANUAL.

3. THE FINAL CERTIFICATION FOR THIS FACILITY WILL INCLUDE A CERTIFICATION BY THE ON-SITE GEOTECHNICAL ENGINEER THAT THE PROJECT WAS CONSTRUCTED PER THE APPROVED PLANS. IT IS THE RESPONSIBILITY OF THE CONTRACTOR TO COORDINATE WITH THE ON-SITE GEOTECHNICAL ENGINEER FOR OBSERVATION AND TESTING SUCH THAT THE ON-SITE GEOTECHNICAL ENGINEER CAN CERTIFY THE CONSTRUCTION OF THE DAM EMBANKMENT AND SPILLWAY. THIS CERTIFICATION MUST ADDRESS THE TESTING FOR MATERIALS AND COMPACTION OF THE DAM EMBANKMENT AND SPILLWAY.

4. ALL CONSTRUCTION ACTIVITY RELATED TO THE PROPOSED STORMWATER CONTROL MEASURE SHALL BE PER THE DETAILS AND SPECIFICATIONS SHOWN IN THESE DRAWINGS. SOILS, COMPACTION, AND OTHER MISCELLANEOUS DETAILS AND SPECIFICATIONS MAY BE MODIFIED PER THE RECOMMENDATIONS OF THE ON-SITE GEOTECHNICAL ENGINEER. HOWEVER, PRIOR TO IMPLEMENTATION, THE DESIGN ENGINEER SHALL BE NOTIFIED OF ANY DEVIATION FROM THESE DESIGN DRAWINGS, INCLUDING SHOP DRAWINGS FOR ANY PROPOSED MODIFICATION.

5. DURING THE INITIAL STAGES OF CONSTRUCTION, THE STORMWATER CONTROL MEASURE MAY BE USED AS A SEDIMENT BASIN FOR EROSION CONTROL PURPOSES. IF SO, THE CONTRACTOR SHALL FOLLOW THE GENERAL CONSTRUCTION SEQUENCE BELOW:
   A. THE CONTRACTOR SHALL CONSTRUCT THE ENTIRE FACILITY (PERMANENT OUTLET STRUCTURE, DAM, ETC.) WITH THE EXCEPTION OF THE INTERIOR FINE GRADING FOR THE FACILITY. THE INTERIOR FINE GRADING WILL BE CONSTRUCTED ONCE THE EROSION CONTROL PHASE IS COMPLETE.
   B. THE TEMPORARY DRAW DOWN RISER (OR SKIMMER) SHALL BE CONNECTED TO THE PERMANENT 6"Ø DIP DRAIN PIPE.
   C. ONCE THE UPSTREAM DRAINAGE AREA IS STABILIZED AND THE EROSION CONTROL INSPECTOR APPROVES THE REMOVAL OF THE SEDIMENT BASIN, THE CONTRACTOR SHALL REMOVE THE TEMPORARY DRAW DOWN RISER (OR SKIMMER) AND CLEAN OUT THE BASIN. ALL SEDIMENT, TRASH, ETC. SHALL BE DISPOSED OF PROPERLY (I.E. - PLACED IN A LANDFILL) AND NOT STOCKPILED IN AN AREA WHERE WATER QUALITY COULD BE ADVERSELY AFFECTED.
   D. ONCE THE BASIN IS CLEANED OUT, AND ALL EROSION CONTROL DEVICES REMOVED, THE CONTRACTOR SHALL CONSTRUCT THE INTERIOR GRADING SHOWN ON THIS SHEET.
   E. ONCE THE GRADING IS COMPLETE, THE CONTRACTOR SHALL REQUEST AN ON-SITE INSPECTION AND AN AS-BUILT SURVEY PRIOR TO INSTALLATION OF THE STORMWATER CONTROL MEASURE PLANTS. IF THE CONTRACTOR PLANTS THE PROPOSED VEGETATION PRIOR TO AN AS-BUILT SURVEY (AND SUBSEQUENT APPROVAL), ANY CHANGES TO THE GRADING / RE-PLANTING OF PLANTS WILL BE AT THE CONTRACTOR'S EXPENSE.
   F. ONCE THE ENGINEER HAS APPROVED THE AS-BUILT GRADING, THE CONTRACTOR SHALL PLANT THE PROPOSED STORMWATER CONTROL MEASURE PLANTS SHOWN ON THE LANDSCAPE PLAN FOR THE FACILITY. AFTER COMPLETION OF THE PLANTING, THE LANDSCAPE CONTRACTOR SHALL PROVIDE A LETTER TO THE ENGINEER CERTIFYING THAT THE PLANTS HAVE BEEN INSTALLED PER THE APPROVED STORMWATER CONTROL MEASURE PLANTING PLAN.

6. ALL OSHA REQUIREMENTS FOR EXCAVATIONS (SHORING, DEPTH, ETC.) ARE THE RESPONSIBILITY OF THE CONTRACTOR. IF REQUIRED, THE CONTRACTOR SHALL PROVIDE AN EXCAVATION PLAN TO BE SEALED BY A NC P.E. IT IS THE RESPONSIBILITY OF THE CONTRACTOR TO DETERMINE IF AN EXCAVATION PLAN IS REQUIRED. THE JOHN R. MCADAMS COMPANY ASSUMES NO RESPONSIBILITY FOR ANY EXCAVATION DESIGN RELATED TO SAFETY OR OSHA REQUIREMENTS.

7. ON-SITE GEOTECHNICAL ENGINEER TO DETERMINE IF IN-SITU SOILS ENCOUNTERED WOULD MAINTAIN A STORMWATER CONTROL MEASURE PERMANENT POOL AT DESIGN ELEVATION. IF HIGHLY PERMEABLE SOILS ARE ENCOUNTERED THAT WOULD NOT MAINTAIN THE PERMANENT POOL ELEVATION AS DESIGNED, A CLAY LINER MAY BE REQUIRED TO MAINTAIN A PERMANENT POOL OF WATER IN THE STORMWATER CONTROL MEASURE. FINAL DETERMINATION IF A CLAY LINER IS NEEDED SHALL BE THE RESPONSIBILITY OF THE ON-SITE GEOTECHNICAL ENGINEER. UPON DETERMINATION OF HIGHLY PERMEABLE SOIL CONDITIONS, ON-SITE GEOTECHNICAL ENGINEER WILL INFORM THE DESIGN ENGINEER AND RECOMMEND LINER SPECIFICATIONS.

8. IT IS ANTICIPATED THAT DEWATERING WILL BE NECESSARY IN THE EXCAVATION AREAS (E.G. - EMBANKMENT SUB GRADE, INTERIOR PORTIONS OF THE STORMWATER CONTROL MEASURE, KEY TRENCH, ETC.). THEREFORE, THE CONTRACTOR SHALL FURNISH, INSTALL, OPERATE, AND MAINTAIN ANY PUMPING EQUIPMENT, ETC. NEEDED FOR REMOVAL OF WATER FROM VARIOUS PARTS OF THE STORMWATER CONTROL MEASURE SITE. DURING PLACEMENT OF FILL WITHIN THESE AREAS, THE CONTRACTOR SHALL KEEP THE WATER LEVEL BELOW THE BOTTOM OF THE EXCAVATION / CONSTRUCTION AREAS. THE MANNER IN WHICH THE WATER IS REMOVED SHALL BE SUCH THAT THE EXCAVATION BOTTOM AND SIDE SLOPES ARE STABLE, WITH NO SEDIMENT DISCHARGED FROM THE SITE (I.E. PUMPED WATER MAY NEED TO BE DIRECTED TO AN APPROVED EROSION CONTROL DEVICE SUCH AS A DIRT BAG (ACF ENVIRONMENTAL), OR ENGINEER APPROVED EQUIVALENT, PRIOR TO DISCHARGE).

9. THE RETAINING WALL ALIGNMENT SHOWN ON THESE PLANS DEPICTS THE LOCATION OF THE FRONT FACE OF THE RETAINING WALL AT THE BOTTOM.

10. THE RETAINING WALL IS TO BE A DESIGN-BUILD PROJECT(S) BY THE CONTRACTOR. IT SHALL BE THE CONTRACTOR'S RESPONSIBILITY TO OBTAIN FINAL CONSTRUCTION DRAWINGS FROM A REGISTERED PROFESSIONAL ENGINEER AND GAIN ALL REQUIRED PERMITS NECESSARY FOR THE CONSTRUCTION OF THE RETAINING WALL.

11. THE RETAINING WALL SHALL BE ASSUMED TO BE BACKFILLED WITH OFF-SITE BORROW MATERIAL OR PROCESSED FILL UNLESS CONTRACTOR CAN PROVIDE OWNER WITH CONFIRMATION FROM THE GEOTECHNICAL ENGINEER AND THE RETAINING WALL DESIGNER THAT READILY AVAILABLE ON-SITE SOILS CAN BE USED.

12. THE TOP AND BOTTOM OF WALL ELEVATIONS SHOWN ON THESE PLANS IDENTIFY FINISHED GRADE ELEVATIONS ONLY. THE EXTENT THAT THE RETAINING WALL WILL BE EXTENDED BELOW GRADE TO THE FOOTING SHALL BE IDENTIFIED ON THE RETAINING WALL CONSTRUCTION DRAWINGS.

13. THE ON-SITE GEOTECHNICAL ENGINEER SHOULD BE GIVEN AN OPPORTUNITY TO REVIEW ALL RETAINING WALL PLANS AND DESIGNS RELEVANT TO GEOTECHNICAL CONSIDERATIONS PRIOR TO FINAL DESIGN OF THE WALLS.

14. THE GRADES SHOWN ON THIS PLAN ARE FINISHED GRADES. IF THE EXISTING SOIL LAYER AFTER CONSTRUCTION / COMPACTION IS NOT DETERMINED SUITABLE BY A LANDSCAPE PROFESSIONAL FOR THE WET POND PLANTINGS, THEN THE CONTRACTOR SHALL AMEND THE PLANTING AREA OF THE WET POND AS DIRECTED BY A LANDSCAPE PROFESSIONAL.

15. PRIOR TO TOPSOIL INSTALLATION, THE CONTRACTOR SHALL SCARIFY THE TOP 2"-3" OF THE BERM SECTION TO PROMOTE BONDING OF THE TOPSOIL WITH THE COMPACTED FILL. THE TOPSOIL DEPTH SHALL RANGE FROM 3"-4" ON THE DAM EMBANKMENT AND AQUATIC SHELF. PLEASE NOTE THE TOPSOIL SHALL BE AMENDED, AS DIRECTED BY A LANDSCAPE PROFESSIONAL, PRIOR TO INSTALLATION ON THE EMBANKMENT AND AQUATIC SHELF.

16. THE CONTRACTOR SHALL REFER TO THE LANDSCAPE PLAN FOR THE PERMANENT PLANTING PLAN/SCHEDULE FOR THIS FACILITY. CONTRACTOR SHALL COORDINATE WITH A LANDSCAPE PROFESSIONAL REGARDING SCHEDULING FOR PLANT INSTALLATION. PLEASE NOTE THAT NO TREES/SHRUBS OF ANY TYPE MAY BE PLANTED ON THE PROPOSED DAM EMBANKMENT (FILL AREAS).

OUTLET STRUCTURE MATERIAL SPECIFICATIONS

1. THE 36"Ø RCP OUTLET BARREL SHALL BE CLASS III RCP, MODIFIED BELL AND SPIGOT, MEETING THE REQUIREMENTS OF ASTM C76-LATEST. THE PIPES SHALL HAVE CONFINED O-RING RUBBER GASKET JOINTS MEETING ASTM C-443-LATEST. THE PIPE JOINTS SHALL BE TYPE R-4. .

2. THE STRUCTURAL DESIGN FOR THE 6' X 6' (INTERNAL DIMENSIONS) RISER BOX WITH EXTENDED BASE SHALL BE BY OTHERS. PRIOR TO ORDERING THE STRUCTURES, THE CONTRACTOR SHALL PROVIDE, TO THE DESIGN ENGINEER FOR REVIEW, SHOP DRAWINGS AND SUPPORTING STRUCTURAL CALCULATIONS SEALED BY A P.E. REGISTERED IN NORTH CAROLINA DEMONSTRATING THE PERTINENT VERTICAL LOADS ARE SUPPORTED BY THE CONCRETE RISER STRUCTURE.

3. THE RISER BOX OUTLET STRUCTURE SHALL BE PROVIDED WITH STEPS 16" ON CENTER. STEPS SHALL BE PROVIDED ON THE INNER WALL OF THE RISER BOX. STEPS SHALL BE IN ACCORDANCE WITH NCDOT STD. 840.66. PLEASE REFER TO SHEET C9.A3 FOR LOCATION OF THE RISER STEPS. NOTE THE STEPS SHALL LINE UP WITH THE ACCESS HATCH OF THE TRASH RACK.

4. THE CONCRETE ANTI-FLOTATION BLOCK SHALL BE CAST-IN-PLACE. STEEL REINFORCEMENT AND CONNECTION TO THE RISER SHALL BE PROVIDED IN ACCORDANCE WITH THE DETAIL ON SHEET C9.A3. THE CONTRACTOR SHALL ENSURE THE WEIGHT OF THE ENTIRE RISER STRUCTURE IS GREATER THAN OR EQUAL TO 30,936 LBS. IN LIEU OF CAST-IN-PLACE, THE CONTRACTOR MAY OPT FOR A PRECAST ANTI-FLOTATION BLOCK. SHOP DRAWINGS FOR THE PRECAST BLOCK SHALL BE SUBMITTED TO THE ENGINEER FOR REVIEW. THE PRECAST ANTI-FLOTATION BLOCK SHALL HAVE A SHIPPING WEIGHT OF 21,300 LBS.

5. THE RISER BOX JOINTS SHALL BE SEALED USING BUTYL RUBBER SEALANT CONFORMING TO ASTM-C990-LATEST. IF NECESSARY, THE CONTRACTOR SHALL INCORPORATE A WATERSTOP INTO THE RISER BOX JOINT TO ENSURE A WATERTIGHT CONNECTION. THE CONTRACTOR SHALL PARGE JOINTS ON BOTH THE INSIDE AND OUTSIDE WITH NON-SHRINK GROUT AND INSTALL GALVANIZED STEEL STRAPS PER DETAIL ON SHEET C9.A2.

6. PRIOR TO ORDERING, THE CONTRACTOR SHALL SUBMIT TRASH RACK SHOP DRAWINGS TO THE ENGINEER FOR REVIEW. CONTRACTOR SHALL ENSURE THAT AN ACCESS HATCH IS PROVIDED WITHIN THE TRASH RACK (SEE DETAIL FOR LOCATION) THAT WILL ALLOW FOR FUTURE MAINTENANCE ACCESS. CONTRACTOR SHALL ALSO PROVIDE A CHAIN AND LOCK FOR SECURING THE ACCESS HATCH. NOTE THE ACCESS HATCH SHALL LINE UP WITH THE ACCESS STEPS AFTER INSTALLATION.

7. ALL POURED CONCRETE SHALL MEET THE FOLLOWING SPECIFICATIONS UNLESS OTHERWISE NOTED:

   -MINIMUM 3000 PSI (28 DAY)
   -SLUMP = 3" - 5"
   -ENTRAINED AIR = 5% - 7%

   PLEASE NOTE NO CONCRETE SHALL BE POURED WHEN THE AMBIENT AIR TEMPERATURES ARE EXPECTED TO BE ABOVE 85°F OR BELOW 40°F. CAST-IN-PLACE CONCRETE SHALL BE "WET CURED" AFTER FINISHING FOR A MINIMUM OF 48 HOURS.

   ON-SITE GEOTECHNICAL ENGINEER TO ENSURE AND CERTIFY ALL POURED CONCRETE MEETS THE ABOVE SPECIFICATIONS.

8. GEOTEXTILE FABRIC FOR THE 42"Ø RCP OUTLET BARREL JOINTS SHALL BE MIRAFI 180N OR ENGINEER APPROVED EQUAL (NON-WOVEN FABRIC).

9. STORMWATER CONTROL MEASURE EMERGENCY DRAW DOWN IS VIA AN 6"Ø PLUG VALVE. THE VALVE SHALL BE A M&H STYLE 1820 ECCENTRIC VALVE OR APPROVED EQUAL. THIS VALVE IS IN ACCORDANCE WITH AWWA C-517, AND SHALL BE OPERABLE FROM TOP OF OUTLET STRUCTURE VIA A HAND WHEEL (SEE DETAIL SHEET C9.A2). THE CONTRACTOR SHALL PROVIDE A REMOVABLE VALVE WRENCH WITH A HAND WHEEL ON TOP FOR OPERATION OF THE 6"Ø PLUG VALVE.

CONSTRUCTION SEQUENCE

1. PRIOR TO CONSTRUCTION, THE OWNER SHALL OBTAIN A LAND DISTURBING (GRADING) PERMIT AND AN "APPROVAL TO CONSTRUCT" FROM THE TOWN OF ROLESVILLE AND ALL OTHER NECESSARY PERMITS FROM APPLICABLE AGENCIES (E.G. 404 / 401 PERMITS)

2. INSTALL ALL SEDIMENT AND EROSION CONTROL MEASURES PER THE APPROVED SEDIMENT AND EROSION CONTROL PLAN. THE CONTRACTOR SHALL MAINTAIN ALL APPROVED SEDIMENT AND EROSION CONTROL MEASURES THROUGHOUT THE ENTIRE PROJECT, AS REQUIRED. THE CONTRACTOR SHALL RECEIVE APPROVAL FROM THE EROSION CONTROL INSPECTOR, AS REQUIRED BY GOVERNING AGENCIES, PRIOR TO ANY CLEARING.

3. CLEAR AND GRUB AREA WITHIN THE LIMITS OF THE PROPOSED DAM CONSTRUCTION. ALL TREES AND THEIR ENTIRE ROOT SYSTEMS MUST BE REMOVED FROM THE DAM FOOTPRINT AREA AND BACKFILLED WITH SUITABLE SOIL MATERIAL. THE BACKFILLED AREAS SHALL BE COMPACTED TO THE SAME STANDARDS AS THE DAM EMBANKMENT. THE REMAINING AREA OF THE EMBANKMENT SHALL BE STRIPPED TO A SUITABLE DEPTH AS DIRECTED BY THE ON-SITE GEOTECHNICAL ENGINEER. ANY RESIDUAL SOILS TO BE LEFT IN PLACE MUST BE WELL SCARIFIED TO PROMOTE BONDING OF THE NEW EMBANKMENT FILL. NO EMBANKMENT MATERIAL SHALL BE PLACED FOR THE DAM OR KEY TRENCH UNTIL APPROVAL OF THE DAM SUBGRADE IS OBTAINED FROM THE ON-SITE GEOTECHNICAL ENGINEER.

4. EXCAVATE FOR THE NEW KEY TRENCH ALONG THE CENTERLINE OF THE PROPOSED DAM EMBANKMENT. THE TRENCH SHALL EXTEND A MINIMUM OF 5 FT BELOW EXISTING GRADE OR 2 FT BELOW THE 36"Ø RCP OUTLET BARREL AND SHALL HAVE A MINIMUM BOTTOM WIDTH OF 5 FEET. THE KEY TRENCH SIDESLOPES SHALL BE A MINIMUM OF 1:1 (H:V). WHEN EXCAVATING THE KEY TRENCH, IF ANY DEBRIS IS ENCOUNTERED TO AN EXTENT THAT SUCH DEBRIS MAY EXIST IN OTHER INSITU PORTIONS OF THE DAM EMBANKMENT, IT SHOULD ALSO BE REMOVED. THE KEY TRENCH SHALL BE COMPACTED TO THE SAME SPECIFICATION LISTED IN ITEM 4 OF THE SECTION TITLED "BERM AND SOIL COMPACTION SPECIFICATIONS." DEPENDING UPON ON-SITE SOIL CONDITIONS ENCOUNTERED DURING EXCAVATION, THE ON-SITE GEOTECHNICAL ENGINEER MAY VARY THE DEPTH AND DIMENSIONS OF THE KEY TRENCH AS DEEMED NECESSARY. THE ON-SITE GEOTECHNICAL ENGINEER SHALL RETAIN DOCUMENTATION OF ANY VARIATION FOR FUTURE AS-BUILT SUBMITTALS TO THE TOWN OF ROLESVILLE.

5. BEGIN PLACEMENT OF BACKFILL WITHIN THE KEY TRENCH. THE KEY TRENCH SHALL BE COMPACTED TO THE SPECIFICATIONS LISTED ITEM 4 OF THE SECTION TITLED "BERM AND SOIL COMPACTION SPECIFICATIONS." THE KEY TRENCH SHALL BE TESTED PER THE SPECIFICATIONS LISTED IN THAT SECTION.

6. PRIOR TO INSTALLATION, SUBGRADE CONDITIONS ALONG THE SPILLWAY PIPES SHOULD BE EVALUATED BY THE ON-SITE GEOTECHNICAL ENGINEER TO ASSESS WHETHER SUITABLE BEARING CONDITIONS EXIST AT THE SUBGRADE LEVEL. SHOULD SOFT OR OTHERWISE UNSUITABLE CONDITIONS BE ENCOUNTERED ALONG THE PIPE ALIGNMENTS, THESE MATERIALS SHOULD BE UNDERCUT AS DIRECTED BY THE GEOTECHNICAL ENGINEER. THE UNDERCUT MATERIALS SHALL BE REPLACED WITH ADEQUATELY COMPACTED STRUCTURAL FILL, LEAN CONCRETE OR FLOWABLE FILL AS DIRECTED BY THE ON-SITE GEOTECHNICAL ENGINEER.

7. IN ORDER TO HELP PROTECT THE SOIL SUBGRADE FROM DETERIORATION (DUE TO EXPOSURE, RAINFALL, SEEPAGE, AND RUNOFF) BEFORE THE CRADLE CAN BE POURED, IT IS STRONGLY RECOMMENDED THAT A 3" TO 4" THICK CONCRETE MUD MAT BE POURED OVER THE SUBGRADE ONCE IT IS APPROVED BY THE ON-SITE GEOTECHNICAL ENGINEER. THE MUD MAT WILL ALSO PROVIDE BEARING FOR THE BLOCKS THAT TEMPORARILY SUPPORT THE SPILLWAY PIPE UNTIL THE CRADLE CAN BE POURED. THE METHOD OF BLOCK SUPPORT FOR THE PIPE PROPOSED BY THE CONTRACTOR SHOULD BE SUBMITTED TO THE JOHN R. McADAMS COMPANY FOR REVIEW.

8. BEGIN CONSTRUCTION OF THE NEW EMBANKMENT. FILL MATERIALS SHALL BE PLACED IN MAXIMUM 8" THICK LIFTS PRIOR TO COMPACTION, UNLESS DIRECTED OTHERWISE BY THE ON-SITE GEOTECHNICAL ENGINEER. FILL LIFTS SHALL BE CONTINUOUS OVER THE ENTIRE LENGTH OF FILL. IF IT IS NECESSARY, THE EMBANKMENT FILL MATERIAL WILL BE OVERBUILT IN HORIZONTAL LIFTS AND CUT BACK TO FINAL GRADE IN ORDER TO ACHIEVE PROPER COMPACTION.

9. AS CONSTRUCTION OF THE EMBANKMENT MOVES FORWARD, IT WILL BE NECESSARY TO INSTALL THE CONCRETE CRADLE. SEE NOTE ON CRADLE DETAIL (SHEET C9.A3). THIS MAY BE CONSTRUCTED USING ONE OF THE FOLLOWING METHODS:

   A. IF THE PROPOSED STRUCTURAL FILL MATERIAL IS UTILIZED AS THE FORMWORK FOR THE CONCRETE CRADLE, THEN THE STRUCTURAL FILL SHOULD BE INSTALLED AND COMPACTED UP TO THE TOP OF CONCRETE CRADLE ELEVATION. ONCE THE STRUCTURAL FILL REACHES THE NEXT DOWNSTREAM JUNCTION BOX OR HEADWALL AND IS COMPACTED TO THE ELEVATION OF THE TOP OF THE CONCRETE CRADLE, EXCAVATE THE CONCRETE CRADLE TRENCH PER THE PROVIDED DETAILS AND CONSTRUCT THE CONCRETE CRADLE AS PER THE PROVIDED CONCRETE CRADLE DETAIL.

   B. IF THE PROPOSED STRUCTURAL FILL IS NOT UTILIZED AS THE FORMWORK FOR THE CONCRETE CRADLE, THEN PRIOR TO CONSTRUCTING THE STRUCTURAL FILL EMBANKMENT, THE FORMWORK FOR THE CONCRETE CRADLE SHOULD BE INSTALLED ON EXISTING GROUND AND/OR THE MUD MAT. THE CONCRETE CRADLE SHALL BE CONSTRUCTED PER THE PROVIDED DETAILS

10. INSTALL RISER / BARREL ASSEMBLY, ALONG WITH THE EMERGENCY DRAIN SYSTEM. INSTALL 36" RCP OUTLET BARREL SPILLWAY FILTER FROM THE DETAILS SHOWN ON SHEET C9.A3.

11. CONSTRUCT EMBANKMENT PER SPECIFICATIONS LISTED IN THE SECTION TITLED "BERM AND SOIL COMPACTION SPECIFICATIONS" AND REQUIREMENTS OF THE ON-SITE GEOTECHNICAL ENGINEER. ALL CHARACTERISTICS OF THE EMBANKMENT FILL MATERIAL SHALL MEET THE STANDARDS SET FORTH IN "BERM AND SOIL COMPACTION SPECIFICATIONS", INCLUDING COMPACTION AND MOISTURE REQUIREMENTS. IF NECESSARY TO ACHIEVE PROPER COMPACTION, THE EMBANKMENT FILL MATERIAL WILL BE OVERBUILT IN HORIZONTAL LIFTS AND CUT BACK TO PROPER FINAL GRADE. ANY HAND COMPACTION ACTIVITIES AROUND SPILLWAY OR DRAIN STRUCTURES SHALL BE CONDUCTED IN 4-INCH LOOSE LIFTS AND BE TO THE SAME COMPACTION AND MOISTURE REQUIREMENTS AS THE ENTIRE EMBANKMENT. ALL COMPACTION AND MOISTURE TESTING SHALL BE CARRIED OUT AS DIRECTED BY THE ON-SITE GEOTECHNICAL ENGINEER AND AS LISTED IN THE SECTION TITLED "BERM AND SOIL COMPACTION SPECIFICATIONS".

12. UPON COMPLETION OF DAM EMBANKMENT, PROMPTLY STABILIZE AND SEED DAM EMBANKMENT PER SEEDING SCHEDULE. PERMANENT GROUND COVER SHALL BE ESTABLISHED PER THE PERMANENT SEEDING SCHEDULE FOUND ON SHEET C9.A4.

13. SCHEDULE A FINAL AS-BUILT INSPECTION AND AS-BUILT SURVEY WITH THE ENGINEER AND SURVEYOR. AN AS-BUILT INSPECTION AND SURVEY SHALL BE SCHEDULED BEFORE IMPOUNDING WATER IN THE FACILITY AND A MINIMUM OF 60 DAYS PRIOR TO THE ANTICIPATED DATE OF CERTIFICATION APPROVAL. ANY COMMENTS OR DEFICIENCIES IN THE SCM CONSTRUCTION MUST BE CORRECTED TO THE SATISFACTION OF THE ENGINEER AND OWNER BEFORE CERTIFICATION SHALL BE GRANTED.

BERM AND SOIL COMPACTION SPECIFICATIONS

1. PRIOR TO CONSTRUCTION, THE ON-SITE GEOTECHNICAL ENGINEER SHALL IDENTIFY BORROW / FILL AREAS AND VERIFY THEIR SUITABILITY FOR USE WITHIN THE DAM EMBANKMENT. ALSO, THE ON-SITE GEOTECHNICAL ENGINEER SHALL PERFORM STANDARD PROCTORS ON THE PROPOSED BORROW MATERIAL TO ENSURE THAT OPTIMUM MOISTURE CONTENT AND COMPACTION CAN BE ACHIEVED / CONTROLLED DURING CONSTRUCTION.

2. ALL FILL MATERIALS TO BE USED FOR THE DAM EMBANKMENT SHALL BE TAKEN FROM BORROW AREAS APPROVED BY THE ON-SITE GEOTECHNICAL ENGINEER. THE FILL MATERIAL SHALL BE FREE FROM ROOTS, STUMPS, WOOD, STONES GREATER THAN 6", AND FROZEN OR OTHER OBJECTIONABLE MATERIAL. THE FOLLOWING SOIL TYPES ARE SUITABLE FOR USE AS FILL WITHIN THE DAM EMBANKMENT AND KEY TRENCH: ML AND CL. ALL FILL MATERIALS SHALL BE APPROVED BY THE ONSITE GEOTECHNICAL ENGINEER FOR THE INTENDED USE.

3. FILL PLACEMENT FOR THE EMBANKMENT SHALL NOT EXCEED A MAXIMUM 8" LIFT (UNCOMPACTED). EACH LIFT SHALL BE CONTINUOUS FOR THE ENTIRE LENGTH OF EMBANKMENT. BEFORE PLACEMENT OF FILL FOR THE BERM SECTION, ALL UNSUITABLE MATERIAL SHALL BE REMOVED AND THE SURFACE PROPERLY PREPARED FOR FILL PLACEMENT. FILL MATERIAL ADJACENT TO ALL SPILLWAY AND DRAINAGE STRUCTURES SHALL BE PLACED IN 4-INCH (UNCOMPACTED) LIFTS AND HAND-COMPACTED TO THE SAME COMPACTION AND MOISTURE REQUIREMENTS AS THE ENTIRE EMBANKMENT.

4. ALL FILL SOILS USED IN THE EMBANKMENT CONSTRUCTION SHALL BE COMPACTED TO AT LEAST 95% OF THE STANDARD PROCTOR MAXIMUM DRY DENSITY (ASTM D-698). THE FILL SOILS SHALL BE COMPACTED AT A MOISTURE CONTENT WITHIN -1 TO +3 PERCENT OF ITS OPTIMUM MOISTURE CONTENT. COMPACTION TESTS SHALL BE PERFORMED BY THE ON-SITE GEOTECHNICAL ENGINEER DURING CONSTRUCTION TO VERIFY THAT THE PROPER COMPACTION LEVEL HAS BEEN REACHED. THE FILL SHOULD BE COMPACTED USING A SHEEPSFOOT TYPE COMPACTOR. IN ORDER TO PREVENT DAMAGE TO THE PIPE, NO COMPACTION EQUIPMENT SHALL CROSS ANY PIPE UNTIL MINIMUM COVER IS ESTABLISHED ALONG THE PIPE.

5. THE DESIGN ENGINEER SHALL BE PROVIDED WITH REPORTS AND CERTIFICATION, BY THE ON-SITE GEOTECHNICAL ENGINEER, THAT THE GEOTECHNICAL ASPECTS OF THE FACILITY HAVE BEEN CONSTRUCTED PER PLAN. THIS CERTIFICATION MUST ADDRESS THE TESTING FOR MATERIALS AND COMPACTION OF THE DAM EMBANKMENT AND SPILLWAY. THESE REPORTS AND CERTIFICATION WILL BE NEEDED DURING THE AS-BUILT CERTIFICATION PROCESS FOR THIS STORMWATER CONTROL MEASURE. THEREFORE, IT SHALL BE THE CONTRACTOR'S RESPONSIBILITY TO COORDINATE TESTING AND OBSERVATION WITH THE ON-SITE GEOTECHNICAL ENGINEER.

6. TESTING OF THE NEW FILL MATERIALS SHALL BE PERFORMED TO VERIFY THAT THE RECOMMENDED LEVEL OF COMPACTION IS ACHIEVED DURING CONSTRUCTION. THEREFORE, ONE DENSITY TEST SHALL BE PERFORMED FOR EVERY 2,500 SQUARE FEET OF AREA FOR EVERY LIFT OF FILL OR AS RECOMMENDED BY THE ON-SITE GEOTECHNICAL ENGINEER.

7. TESTING WILL BE REQUIRED ALONG THE 36"Ø RCP OUTLET BARREL AT A FREQUENCY OF ONE TEST PER 25 LF OF PIPE PER VERTICAL FOOT OF FILL OR AS DIRECTED BY THE ON-SITE GEOTECHNICAL ENGINEER.

STATEMENT OF RESPONSIBILITY

1. ALL REQUIRED MAINTENANCE AND INSPECTIONS OF THE STORMWATER CONTROL MEASURE SHALL BE THE RESPONSIBILITY OF THE OWNER, PER THE EXECUTED OPERATION AND MAINTENANCE AGREEMENT FOR THIS FACILITY.

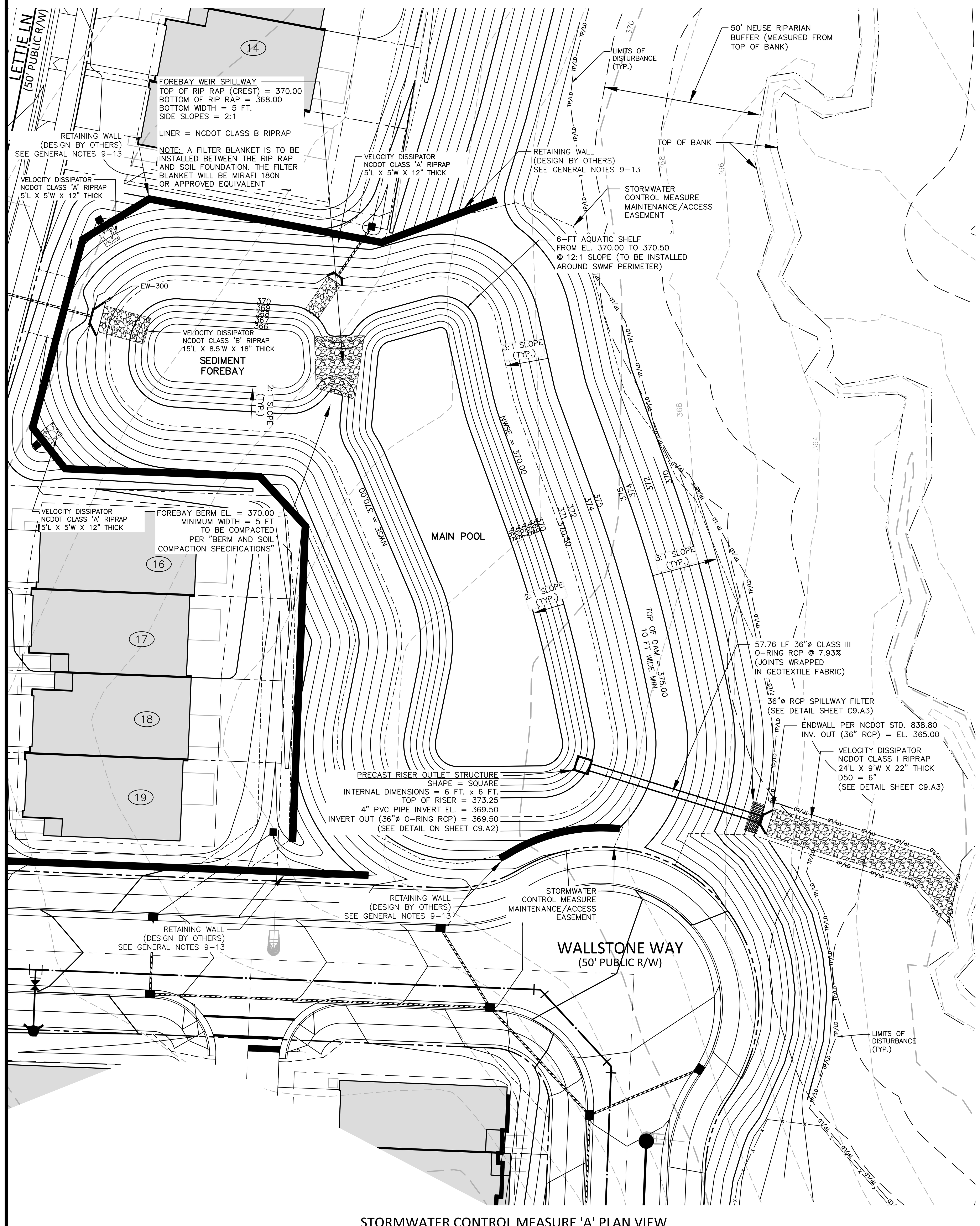

STORMWATER CONTROL MEASURE 'A' PLAN VIEW
1" = 20'

GRAPHIC SCALE
0 10 20 40
1 inch = 20 ft.

FINAL DRAWING - RELEASED FOR CONSTRUCTION

McADAMS
The John R. McAdams Company, Inc.
621 Hillsborough Street
Suite 500
Raleigh, NC 27603
phone 919. 361. 5000
fax 919. 361. 2269
license number: C-0293, C-187
www.mcadamsco.com

WALLBROOK LANDCO, LLC
3 KEEL STREET, SUITE 2
WRIGHTSVILLE BEACH, NORTH CAROLINA
28480-1709

WALLBROOK
CONSTRUCTION DRAWINGS
ROLESVILLE, NORTH CAROLINA

NORTH CAROLINA PROFESSIONAL ENGINEER SEAL 043300 DANIEL C. WIEBKE
2024.08.30 16:43:21 -04'00'

REVISIONS

NO.	DATE	
1	09. 27. 2023	WALL CREEK DRIVE TIE-IN REVISIONS
2	11. 02. 2023	EW-400 REVISION
3	05. 10. 2024	UPDATING SCM B GRADING AND SCM A OUTLET
4	06. 06. 2024	SEWER MANHOLE REVISIONS
5	08. 30. 2024	UPDATED BUILDING FOOTPRINTS AND IMPERVIOUS AREA

PLAN INFORMATION

PROJECT NO.	CPR-19100
FILENAME	CPR-19100-SWA
CHECKED BY	DCW
DRAWN BY	TKD
SCALE	1" = 20'
DATE	05. 22. 2023

SHEET

STORMWATER CONTROL MEASURE "A" PLAN VIEW

C9.A1

X:\Projects\CPR\CPR-19100\04-Production\Water Resources\Construction Drawings\Current Drawings\SCM CDs\CPR-19100-SWA.dwg, 8/29/2024 1:08:26 PM, Tommy Dabolt

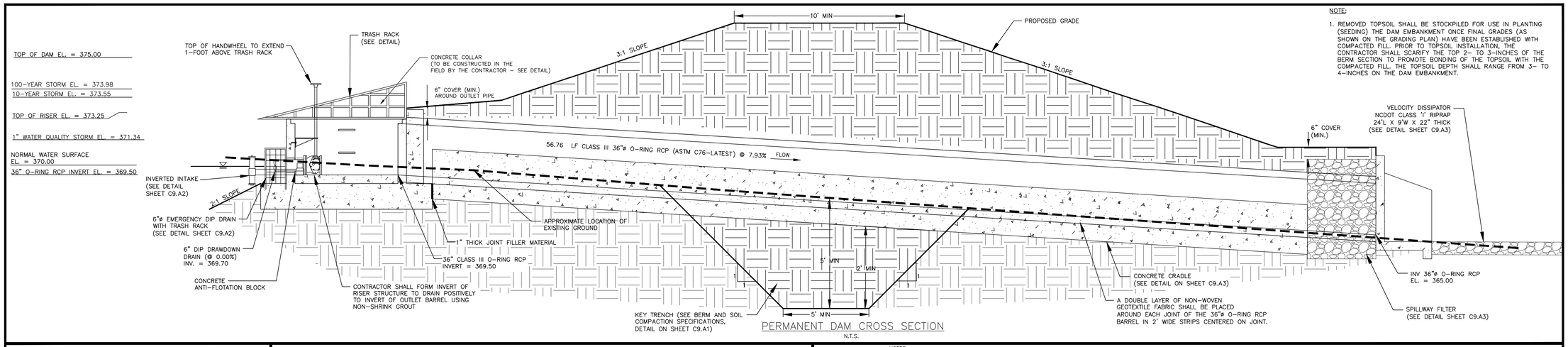

NOTE:

1. REMOVED TOPSOIL SHALL BE STOCKPILED FOR USE IN PLANTING (SEEDING) THE DAM EMBANKMENT ONCE FINAL GRADES (AS SHOWN ON THE GRADING PLAN) HAVE BEEN ESTABLISHED WITH COMPACTED FILL. PRIOR TO TOPSOIL INSTALLATION, THE CONTRACTOR SHALL SCARIFY THE TOP 2- TO 3-INCHES OF THE BERM SECTION TO PROMOTE BONDING OF THE TOPSOIL WITH THE COMPACTED FILL. THE TOPSOIL DEPTH SHALL RANGE FROM 3- TO 4-INCHES ON THE DAM EMBANKMENT.

PERMANENT DAM CROSS SECTION

N.T.S.

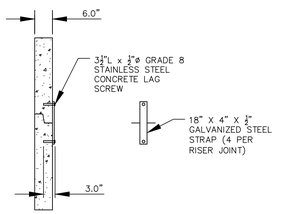

RISER JOINT CONNECTION DETAIL

N.T.S.

NOTES:

1. CONCRETE ANTI-FLOTATION BLOCK TO BE PROVIDED WITH MINIMUM TEMPERATURE AND SHRINKAGE STEEL REINFORCEMENT.

2. TRASH RACKS NOT SHOWN FOR CLARITY.

3. THE NUMBER OF GUIDES FOR THE VALVE STEM SHALL BE DETERMINED IN THE FIELD BY THE CONTRACTOR. THE VALVE STEM MUST BE OPERABLE FROM THE TOP OF THE RISER VIA THE HANDWHEEL WITH AN INSIGNIFICANT AMOUNT OF PLAY IN THE VALVE STEM.

4. CONTRACTOR SHALL PROVIDE A JOINT IN THE OUTLET BARREL NO MORE THAN 5-FT FROM THE RISER.

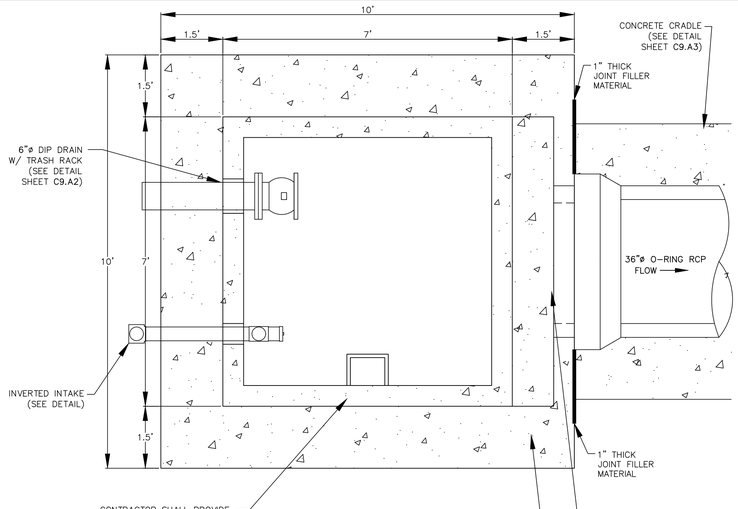

NOTES:

1. ALL REBAR TO BE #4 REBAR.
2. ALL REBAR AND ANGLES TO BE HOT-DIPPED GALVANIZED AND BE PROVIDED WITH AN EPOXY COATING.
3. THE HOT-DIPPED, GALVANIZED 2"x2"x1/4" ANGLE SHALL BE WELDED TO THE REBAR TRASH RACK. ONCE WELDED, THE ENTIRE ASSEMBLY SHALL BE PLACED ONTO THE RISER WITH ANGLES SITTING DIRECTLY ON TOP OF RISER.
4. TRASH RACK IS TO BE SECURELY FASTENED TO THE SPILLWAY RISER WITH A MINIMUM OF FOUR CORROSION-RESISTANT ANCHORS.
5. ACCESS HATCH SHALL ALIGN WITH STEPS IN RISER.

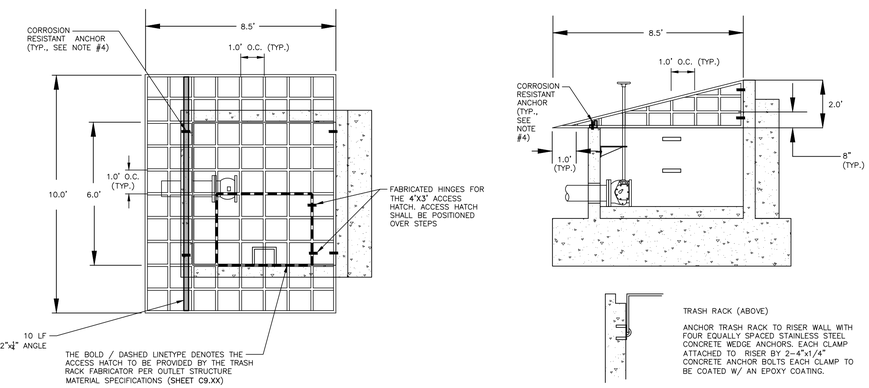

6' X 6' RISER TRASH RACK

N.T.S.

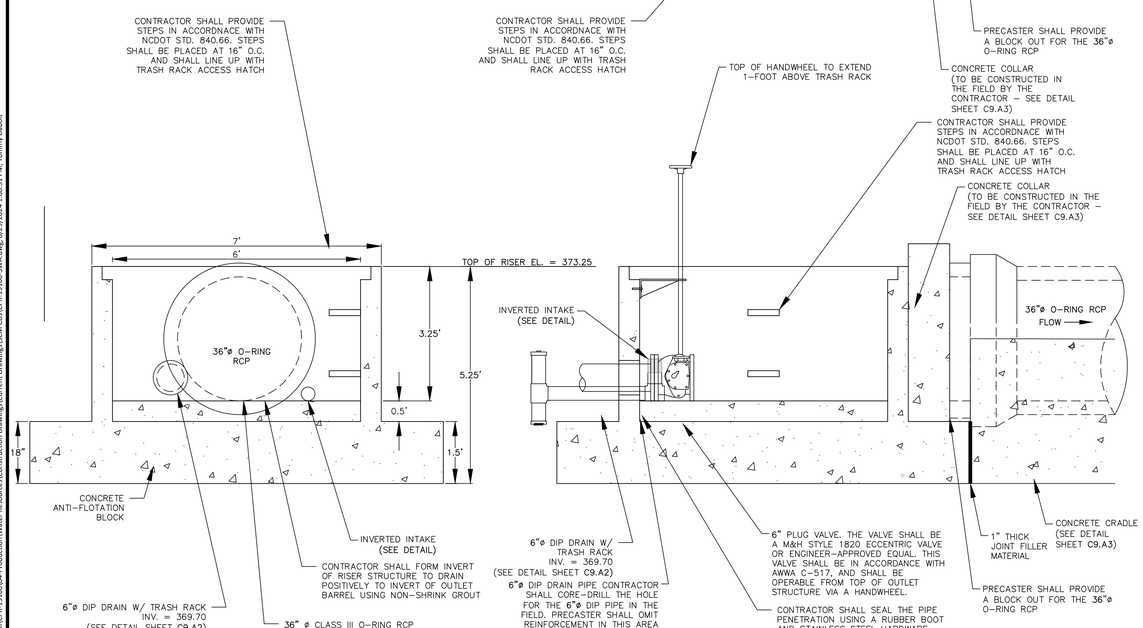

PERMANENT OUTLET STRUCTURE DETAILS

N.T.S.

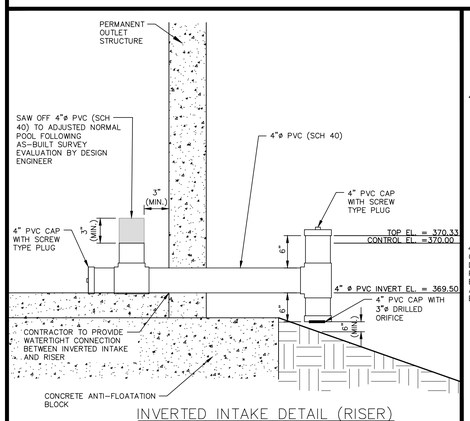

INVERTED INTAKE DETAIL (RISER)

N.T.S.

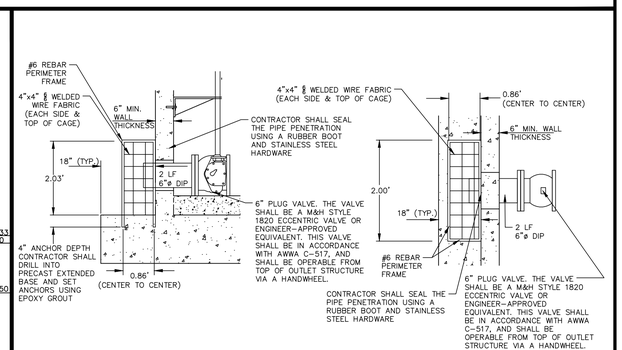

6"ø EMERGENCY DIP DRAIN TRASH RACK DETAILS

N.T.S.

McADAMS

The John R. McAdams Company, Inc.
621 Hillsborough Street
Suite 500
Raleigh, NC 27603

phone 919. 361. 5000
fax 919. 361. 2269
license number: C-0293, C-187

www.mcadamsco.com

WALLBROOK LANDCO, LLC
3 KEEL STREET, SUITE 2
WRIGHTSVILLE BEACH, NORTH CAROLINA
28480-1709

WALLBROOK
CONSTRUCTION DRAWINGS
ROLESVILLE, NORTH CAROLINA

NORTH CAROLINA PROFESSIONAL SEAL 043345 ENGINEER DANIEL C. WEBBE 2024.08.30 10:09:00

REVISIONS

NO.	DATE	
1	09. 27. 2023	WALL CREEK DRIVE TIE-IN REVISIONS
2	11. 02. 2023	EW-400 REVISION
3	05. 10. 2024	UPDATING SCM & GRADING AND SCM A OUTLET
4	06. 06. 2024	SEWER MANHOLE REVISIONS
5	08. 30. 2024	UPDATED BUILDING FOOTPRINTS AND IMPERVIOUS AREA

PLAN INFORMATION

PROJECT NO.	CPR-19100
FILENAME	CPR-19100-SWA
CHECKED BY	DCW
DRAWN BY	TKD
SCALE	N.T.S
DATE	05. 22. 2023

SHEET

STORMWATER CONTROL MEASURE "A" DETAILS

C9.A2

FINAL DRAWING - RELEASED FOR CONSTRUCTION

X:\Projects\CPR\CPR-19100\04-Production\Water Resources\Construction Drawings\Current Drawings\SCM CDs\CPR-19100-SWA.dwg, 8/29/2024 1:08:51 PM, Tommy Dabolt

NOTES:

1. ALL REBAR TO BE #4 REBAR.
2. WRAP OUTSIDE OF PIPE WITH VOLCLAY WATERSTOP-RX® 101 (OR PRE-APPROVED EQUIVALENT) AT THE FACE OF THE PRECAST STRUCTURE WALL. PROVIDE 6" OVER LAP ON THE BOTTOM OF THE PIPE.

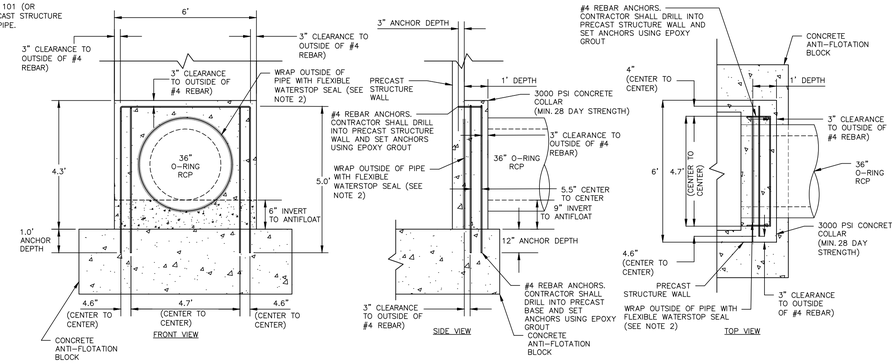

36"ø CONCRETE COLLAR DETAIL

N.T.S.

NOTE:

1. HAVILAND DRAINAGE PRODUCTS 4" ALUMINUM ANIMAL GUARD ITEM NUMBER AGSS04 (OR ENGINEER APPROVED EQUIVALENT) TO BE INSTALLED AT OUTLET OF 4" HDPE PIPES

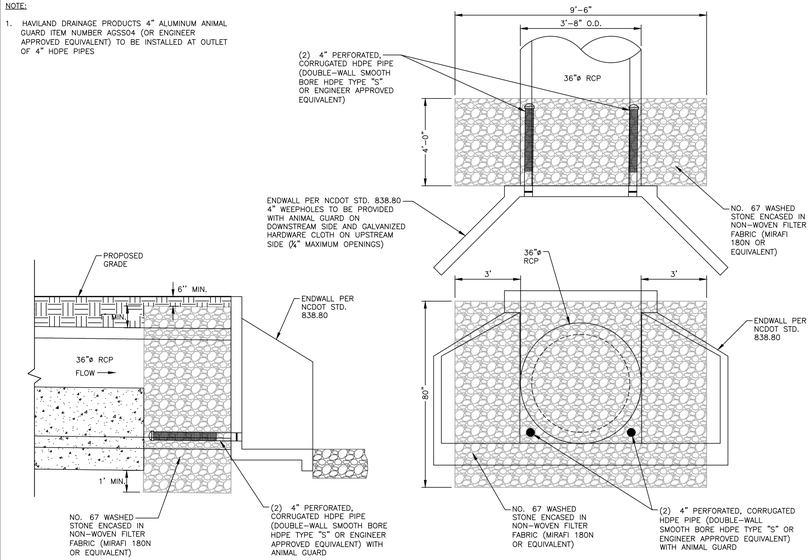

36" SPILLWAY FILTER DETAIL

N.T.S.

NOTES:

1. A FILTER BLANKET IS TO BE INSTALLED BETWEEN THE RIPRAP AND SOIL FOUNDATION. THE FILTER BLANKET WILL CONSIST OF A MINIMUM 4" THICK LAYER OF STONE (NCDOT #57) UNDERLAIN WITH MIRAFI FILTER WEAVE 700 OR ENGINEER-APPROVED EQUIVALENT.
2. RIPRAP TO EXTEND TO TOP OF CHANNEL WITH 2:1 SIDE SLOPES THROUGHOUT THE EXTENT OF CHANNEL.

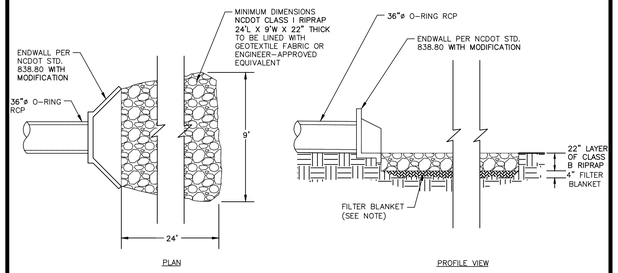

OUTLET BARREL VELOCITY DISSIPATER

N.T.S.

NOTE:

1. CONTRACTOR SHALL PROVIDE A JOINT IN THE OUTLET BARREL NO MORE THAN 5-FT FROM THE RISER.

BARREL PIPE CONCRETE CRADLE CONSTRUCTION SEQUENCE

1. IF OPTION A IS CHOSEN FROM NOTE 9 OF THE OUTLET STRUCTURE MATERIAL SPECIFICATIONS, THEN BRING GRADE OF DAM EMBANKMENT TO SPRINGLINE OF PIPE ELEVATION. IF OPTION B IS CHOSEN FROM NOTE 9 OF THE OUTLET STRUCTURE MATERIAL SPECIFICATIONS, THEN CONSTRUCT FORMWORK FOR CONCRETE CRADLE ON EXISTING GRADE.
2. IF OPTION A IS CHOSEN FROM NOTE 9 OF THE OUTLET STRUCTURE MATERIAL SPECIFICATIONS, THEN EXCAVATE TRENCH FOR CRADLE AND BARREL PER DIMENSIONS ON DRAWINGS. IF OPTION B IS CHOSEN FROM NOTE 9 OF THE OUTLET STRUCTURE MATERIAL SPECIFICATIONS, PROCEED TO STEP 3 BELOW.
3. PLACE BARREL PIPE ON CONCRETE BLOCKS TO GRADE. AT THIS STEP, CONTRACTOR SHALL WRAP A DOUBLE LAYER OF NON-WOVEN GEOTEXTILE FABRIC AROUND EACH JOINT OF THE 36"ø O-RING RCP BARREL IN 2' WIDE STRIPS CENTERED ON JOINT.
4. PLACE CONCRETE FOR CRADLE FOR EACH SECTION FROM ONE SIDE OF THE TRENCH. ALLOW CONCRETE TO FILL ENTIRE AREA UNDER PIPE AND PIPE HAUNCHES AS TO LEAVE NO VOIDS UNDER THE PIPE BEFORE PLACING CONCRETE ON THE OPPOSITE SIDE OF THE TRENCH. PLACE ENTIRE CRADLE AS ONE LIFT (VERTICALLY) PER DRAWINGS.
5. ALLOW CRADLE TO CURE FOR A MINIMUM OF 7 DAYS BEFORE ANY VIBRATING COMPACTION EQUIPMENT IS USED IN THE VICINITY OF THE BARREL PIPE.
6. TRENCH TO BE BACKFILLED IN 5" LIFTS WHEN COMPACTION IS BY HAND. BACKFILL IS IN 8" LIFTS WHEN CONDUCTED BY MACHINE. MINIMUM OF 2 FEET COVER MUST BE PRESENT ON 36"ø RCP BEFORE DRIVING OVER WITH HEAVY EQUIPMENT.

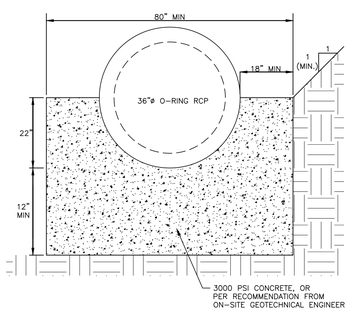

36" CONCRETE CRADLE DETAIL

N.T.S.

NOTES:

1. ALL REINFORCING STEEL IN RISER ANTI-FLOTATION BLOCK TO BE GRADE 60 #6 BARS FOR HORIZONTAL CROSSING AND GRADE 60 #4 BARS FOR VERTICAL CONNECTIONS.
2. INSIDE OF RISER BOTTOM TO BE FORMED WITH NON-SHRINK GROUT TO INVERT ELEVATION OF BARREL.
3. ALL PIPE PENETRATIONS THROUGH THE CONCRETE RISER STRUCTURE SHALL BE MADE WATERTIGHT.

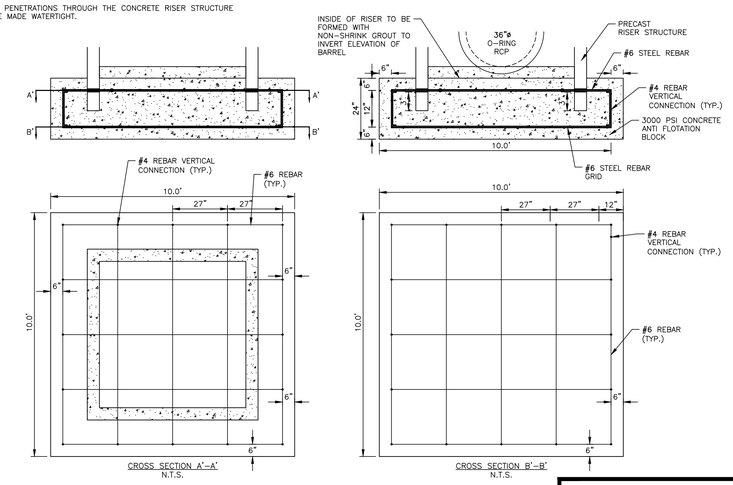

RISER/ANTI-FLOTATION BLOCK CONNECTION

N.T.S.

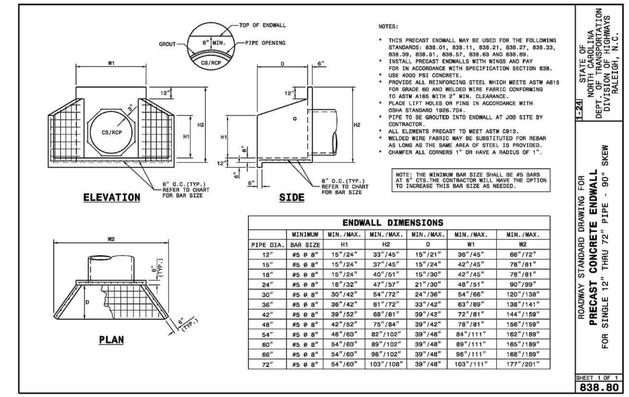

NOTES:

- THIS PRECAST ENDWALL MAY BE USED FOR THE FOLLOWING STANDARDS: 838.01, 838.11, 838.21, 838.27, 838.33, 838.39, 838.51, 838.57, 838.63 AND 838.69.
- INSTALL PRECAST ENDWALLS WITH WINGS AND PAY FOR IN ACCORDANCE WITH SPECIFICATION SECTION 828.
- USE 4000 PSI CONCRETE.
- PROVIDE ALL REINFORCING STEEL WHICH MEETS ASTM A615 FOR GRADE 60 AND WELDED WIRE FABRIC CONFORMING TO ASTM A185 WITH 2" MIN. CLEARANCE.
- PLACE LIFT HOLES OR PINS IN ACCORDANCE WITH OSHA STANDARD 1926.704.
- PIPE TO BE GROUTED INTO ENDWALL AT JOB SITE BY CONTRACTOR.
- ALL ELEMENTS PRECAST TO MEET ASTM C913.
- WELDED WIRE FABRIC MAY BE SUBSTITUTED FOR REBAR AS LONG AS THE SAME AREA OF STEEL IS PROVIDED.
- CHAMFER ALL CORNERS 1" OR HAVE A RADIUS OF 1".

NOTE: THE MINIMUM BAR SIZE SHALL BE #5 BARS AT 8" CTS.THE CONTRACTOR WILL HAVE THE OPTION TO INCREASE THIS BAR SIZE AS NEEDED.

ENDWALL DIMENSIONS

	MINIMUM	MIN./MAX.	MIN./MAX.	MIN./MAX.	MIN./MAX.	MIN./MAX.
PIPE DIA.	BAR SIZE	H1	H2	D	W1	W2
12"	#5 @ 8"	15"/24"	33"/45"	15"/21"	36"/45"	66"/72"
15"	#5 @ 8"	15"/24"	37"/45"	15"/24"	42"/45"	78"/81"
18"	#5 @ 8"	15"/24"	40"/51"	15"/30"	42"/45"	78"/81"
24"	#5 @ 8"	18"/32"	47"/57"	21"/30"	48"/51"	90"/99"
30"	#5 @ 8"	30"/42"	54"/72"	24"/36"	54"/66"	120"/138"
36"	#5 @ 8"	36"/42"	61"/72"	33"/42"	63"/69"	138"/141"
42"	#5 @ 8"	39"/52"	68"/81"	39"/42"	72"/81"	144"/159"
48"	#5 @ 8"	42"/52"	75"/84"	39"/42"	78"/81"	156"/159"
54"	#5 @ 8"	48"/60"	82"/102"	39"/48"	84"/111"	162"/189"
60"	#5 @ 8"	54"/60"	89"/102"	39"/48"	89"/111"	165"/189"
66"	#5 @ 8"	54"/60"	96"/102"	39"/48"	96"/111"	168"/189"
72"	#5 @ 8"	54"/60"	103"/108"	39"/48"	103"/111"	177"/201"

STATE OF NORTH CAROLINA DEPT. OF TRANSPORTATION DIVISION OF HIGHWAYS RALEIGH, N.C.

1-24

ROADWAY STANDARD DRAWING FOR
PRECAST CONCRETE ENDWALL
FOR SINGLE 12" THRU 72" PIPE - 90° SKEW

SHEET 1 OF 1
838.80

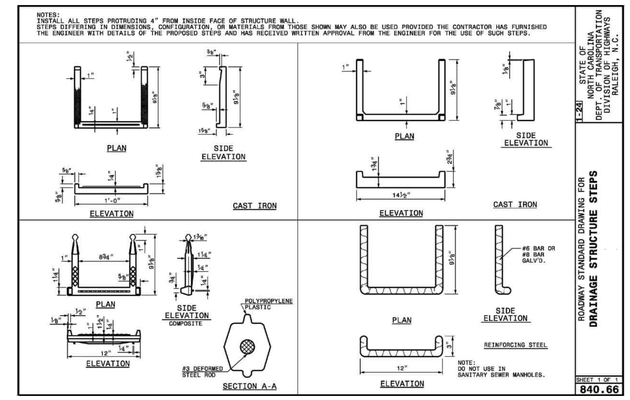

NOTES:
INSTALL ALL STEPS PROTRUDING 4" FROM INSIDE FACE OF STRUCTURE WALL.
STEPS DIFFERING IN DIMENSIONS, CONFIGURATION, OR MATERIALS FROM THOSE SHOWN MAY ALSO BE USED PROVIDED THE CONTRACTOR HAS FURNISHED THE ENGINEER WITH DETAILS OF THE PROPOSED STEPS AND HAS RECEIVED WRITTEN APPROVAL FROM THE ENGINEER FOR THE USE OF SUCH STEPS.

STATE OF NORTH CAROLINA DEPT. OF TRANSPORTATION DIVISION OF HIGHWAYS RALEIGH, N.C.

1-24

ROADWAY STANDARD DRAWING FOR
DRAINAGE STRUCTURE STEPS

SHEET 1 OF 1
840.66

McADAMS
The John R. McAdams Company, Inc.
621 Hillsborough Street
Suite 500
Raleigh, NC 27603
phone 919. 361. 5000
fax 919. 361. 2269
license number: C-0293, C-187
www.mcadamsco.com

WALLBROOK LANDCO, LLC
3 KEEL STREET, SUITE 2
WRIGHTSVILLE BEACH, NORTH CAROLINA
28480-1709

WALLBROOK
CONSTRUCTION DRAWINGS
ROLESVILLE, NORTH CAROLINA

NORTH CAROLINA PROFESSIONAL SEAL 043302 ENGINEER DANIEL C. WIEBKE
2024.08.30 16:43:58 -04'00'

REVISIONS

NO.	DATE	
1	09. 27. 2023	WALL CREEK DRIVE TIE-IN REVISIONS
2	11. 02. 2023	EW-400 REVISION
3	05. 10. 2024	UPDATING SCM B GRADING AND SCM A OUTLET
4	06. 06. 2024	SEWER MANHOLE REVISIONS
5	08. 30. 2024	UPDATED BUILDING FOOTPRINTS AND IMPERVIOUS AREA

PLAN INFORMATION

PROJECT NO.	CPR-19100
FILENAME	CPR-19100-SWA
CHECKED BY	DCW
DRAWN BY	TKD
SCALE	N.T.S
DATE	05. 22. 2023

SHEET

STORMWATER CONTROL MEASURE "A" DETAILS

C9.A3

FINAL DRAWING - RELEASED FOR CONSTRUCTION

X:\Projects\CPR\CPR-19100\04-Production\Water Resources\Construction Drawings\Current Drawings\SCM CDs\CPR-19100-SWA.dwg, 8/29/2024 1:09:08 PM, Tommy Dabolt

STORMWATER CONTROL MEASURE 'A' LANDSCAPE SPECIFICATIONS

LEGEND

QTY.	SYM.	SCIENTIFIC NAME	COMMON NAME	HATCH	TYPE	SPACING
SHALLOW WATER						
166	IV	IRIS VIRGINIANA	BLUE FLAG IRIS		4-INCH CONTAINER	24" O.C.
151	PC	PONTEDERIA CORDATA	PICKEREL WEED		4-INCH CONTAINER	24" O.C.
136	ST	SCHOENOPLECTUS TABERNAEMONTANI	SOFT-STEM BULRUSH		4-INCH CONTAINER	24" O.C.
SHALLOW LAND						
137	CS	CAREX SPP.	SEDGES		4-INCH CONTAINER	24" O.C.
155	CA	CRINUM AMERICANUM	AMERICAN CRINUM LILY		4-INCH CONTAINER	24" O.C.
115	HA	HIBISCUS ACULEATUS	PINELANDS MALLOW		4-INCH CONTAINER	24" O.C.

SEEDBED PREPARATION

1. CHISEL COMPACTED AREAS AND SPREAD TOPSOIL 3-4 INCHES DEEP OVER ADVERSE SOIL CONDITIONS. TOPSOIL SHOULD BE INCORPORATED INTO THE FINAL GRADING OF THE BASIN SIDE SLOPES AND AQUATIC SHELF. CONTRACTOR SHOULD SCARIFY THE TOP 3-4 INCHES OF THE COMPACTED FILL TO PROMOTE BONDING WITH TOPSOIL.
2. RIP THE ENTIRE AREA TO 6 INCHES DEPTH.
3. REMOVE ALL LOOSE ROCK, ROOTS, AND OTHER OBSTRUCTIONS LEAVING SURFACE REASONABLY SMOOTH AND UNIFORM.
4. PER ONE TIME ONLY, APPLY AGRICULTURAL LIME, FERTILIZER, AND SUPERPHOSPHATE UNIFORMLY AND MIX WITH SOIL.
5. CONTINUE TILLAGE UNTIL A WELL-PULVERIZED, FIRM REASONABLY UNIFORM SEEDBED IS PREPARED 4 TO 6 INCHES DEEP.
6. SEED ON A FRESHLY PREPARED SEEDBED AND COVER.
7. MULCH IMMEDIATELY AFTER SEEDING AND ANCHOR MULCH.
8. INSPECT ALL SEEDED AREAS AND MAKE NECESSARY REPAIRS OR RESEEDINGS WITHIN THE PLANTING SEASON, IF POSSIBLE. AFTER PERMANENT COVER IS ESTABLISHED.
9. CONSULT CONSERVATION INSPECTOR ON MAINTENANCE TREATMENT.

TEMPORARY SEEDING SCHEDULE

SEEDING DATE	SEEDING MIXTURE	APPLICATION RATE
JAN 1 - MAY 1	RYE (GRAIN)	120 LBS/AC
	KOBE LESPEDEZA	50 LBS/AC
MAY 1 - AUG 15	GERMAN MILLET	40 LBS/AC
AUG 15 - DEC 30	RYE (GRAIN)	120 LBS/AC

SOIL AMENDMENTS
FOLLOW RECOMMENDATIONS OF SOIL TESTS OR APPLY 2,000 LB/AC GROUND AGRICULTURE LIMESTONE AND 750 LB/AC 10-10-10 FERTILIZER (FROM AUG 15 - DEC 30, INCREASE 10-10-10 FERTILIZER TO 1000 LB/AC).

MULCH
APPLY 4000 LB/AC STRAW. ANCHOR STRAW BY TACKING WITH ASPHALT, NETTING, OR A MULCH ANCHORING TOOL. A DISK WITH BLADES SET NEARLY STRAIGHT CAN BE USED AS A MULCH ANCHORING TOOL.

MAINTENANCE
JAN 1 - AUG 15: REFERTILIZE IF GROWTH IS NOT FULLY ADEQUATE. RESEED, REFERTILIZE, AND MULCH IMMEDIATELY FOLLOWING EROSION OR OTHER DAMAGE.

AUG 15 - DEC 30: REPAIR AND REFERTILIZE DAMAGED AREAS IMMEDIATELY. TOP DRESS WITH 50 LB/AC OF NITROGEN IN MARCH. IF IT IS NECESSARY TO EXTEND TEMPORARY COVER BEYOND JUNE 15, OVERSEED WITH 50 LB/AC KOBE LESPEDEZA IN LATE FEBRUARY OR EARLY MARCH.

NOTE: USE THE TEMPORARY SEEDING SCHEDULE ONLY WHEN DATE IS NOT CORRECT TO USE THE PERMANENT SEEDING SCHEDULE.

PERMANENT SEEDING SCHEDULE (DAM EMBANKMENTS)

SEEDING DATE	SEEDING MIXTURE OPTIONS (CHOOSE ONE)	APPLICATION RATE
MAY 1 - AUG 31	CENTIPEDE RAW	30 LBS/AC
APRIL 1 - SEPT 1	SUMMER MIX (80% HULLED BERMUDA/20% MILLET)	200 LBS/AC
OCT 1 - MARCH 1	FALL MIX (80% TALL FESCUE/20% ANNUAL RYEGRASS)	200 LBS/AC

SOIL AMENDMENTS
FOLLOW RECOMMENDATIONS OF SOIL TESTS OR APPLY 4,000 LB/AC GROUND AGRICULTURE LIMESTONE AND 1000 LB/AC 10-10-10 FERTILIZER.

MULCH
APPLY 4000 LB/AC STRAW. ANCHOR STRAW BY TACKING WITH ASPHALT, NETTING, OR A MULCH ANCHORING TOOL. A DISK WITH BLADES SET NEARLY STRAIGHT CAN BE USED AS A MULCH ANCHORING TOOL.

MAINTENANCE
INSPECT AND REPAIR MULCH FREQUENTLY. REFERTILIZE IN LATE WINTER OF THE FOLLOWING YEAR; USE SOIL TESTS OR APPLY 150 LB/AC 10-10-10 FERTILIZER. MOW REGULARLY TO A HEIGHT OF 2-4 INCHES.

NOTE: PERMANENT SEEDING SCHEDULE IS FOR SLOPES OF THE BASIN AND TOP OF BERM.

PLANTING INSTRUCTIONS

PLANTING TECHNIQUES
A. ENSURE THAT ROOTS, ONCE REMOVED FROM POT, ARE STRAIGHTENED AND FACE DOWNWARD.
B. CREATE PLANTING AREA FOR EACH PLANT AND EXCAVATE PIT.
C. PLACE PLANTS IN PIT ENSURING ROOTS ARE FACING COMPLETELY DOWNWARD.
D. HEEL IN SOIL AROUND PLANT AND PROCEED TO NEXT PLANTING LOCATION.
E. NEWLY PLANTED PLANTS NEED TO BE FASTENED TO THE SUBSTRATE FOR THE ESTABLISHMENT OF NEW ROOTS.
F. ROOTS SHALL BE SPREAD IN THEIR NORMAL POSITION. ALL BROKEN OR FRAYED ROOTS SHALL BE CUT OFF CLEANLY.
G. THE DIAMETER OF THE PITS FOR ALL VEGETATIVE STOCK SHALL BE AT LEAST THREE TIMES THE DIAMETER OF THE ROOT MASS. PLANT PIT WALL SHALL BE SCARIFIED PRIOR TO PLANT INSTALLATION.
H. SET THE PLANTS UPRIGHT, IN THE CENTER OF THE PIT. THE BOTTOM OF THE ROOT MASS SHOULD BE RESTING ON UNDISTURBED SOIL.
I. PLACE THE BACKFILL AROUND THE BASE AND SIDES OF THE ROOT MASS, AND WORK EACH LAYER TO SETTLE BACKFILL AND TO ELIMINATE VOIDS AND AIR POCKETS. WHEN PIT IS APPROXIMATELY 2/3 FULL, WATER THOROUGHLY BEFORE PLACING REMAINDER OF THE BACKFILL. WATER AGAIN AFTER PLACING FINAL LAYER OF BACKFILL.
J. BROKEN OR DAMAGED PARTS WILL BE CUT BACK TO UNDAMAGED TISSUE, LEAVING AS MUCH GREEN BASAL TISSUE AS POSSIBLE ABOVE THE ROOTS. IF MORE THAN FIFTY PERCENT (50%) OF THE PLANT IS DAMAGED THEN CONTRACTOR SHALL REPLACE THE PLANT.

CONTAINER STOCK / BARE ROOT
A. STOCK SHALL HAVE BEEN GROWN IN A CONTAINER LONG ENOUGH FOR THE ROOT SYSTEM TO HAVE DEVELOPED SUFFICIENTLY TO HOLD ITS SOIL TOGETHER ONCE REMOVED FROM THE CONTAINER.
B. CONTAINER PLANTS WILL NEED TO BE WATERED REGULARLY AND PLACED IN SHADY CONDITIONS UNTIL PLANTING OCCURS.
C. BARE ROOT PLANTS ARE FOR IMMEDIATE PLANTING, OTHERWISE SEE D) BELOW.
D. IF BARE ROOTS SPECIMENS ARE NOT TO BE PLANTED WITHIN FOUR (4) DAYS, TEMPORARY HOLDING OF BARE ROOT SPECIMENS ARE TO BE COVERED ENTIRELY BY A SUITABLE MEDIUM (ETC. SOIL, SAWDUST, MULCH OR THE LIKE) AND WATERED REGULARLY SO AS TO NOT DRY OUT.

PLANT LOCATIONS
A. NEW PLANTINGS SHALL BE LOCATED WHERE SHOWN ON PLAN EXCEPT WHERE CHANGES HAVE BEEN MADE IN PROPOSED CONSTRUCTION.
B. NECESSARY ADJUSTMENTS SHALL BE MADE ONLY AFTER APPROVAL BY THE OWNER OR THE OWNER'S REPRESENTATIVE.

WATER
WATER SHALL BE POTABLE AND SHALL NOT CONTAIN ELEMENTS TOXIC TO PLANT LIFE.

PLANTING SCHEDULE

1. ONCE THE GRADING IS COMPLETE, THE CONTRACTOR SHALL REQUEST AN ON-SITE INSPECTION AND AN AS-BUILT SURVEY PRIOR TO INSTALLATION OF THE STORMWATER MANAGEMENT FACILITY PLANTS. IF THE CONTRACTOR PLANTS THE PROPOSED VEGETATION PRIOR TO AN AS-BUILT SURVEY (AND SUBSEQUENT APPROVAL), ANY CHANGES TO THE GRADING / RE-PLANTING OF PLANTS WILL BE AT THE CONTRACTOR'S EXPENSE.
2. ONCE THE ENGINEER HAS APPROVED THE AS-BUILT GRADING, THE CONTRACTOR SHALL PLANT THE PROPOSED STORMWATER MANAGEMENT FACILITY PLANTS SHOWN ON THE LANDSCAPE PLAN FOR THE FACILITY. AFTER COMPLETION OF THE PLANTING, THE LANDSCAPE CONTRACTOR SHALL PROVIDE A LETTER TO THE ENGINEER CERTIFYING THAT THE PLANTS HAVE BEEN INSTALLED PER THE APPROVED STORMWATER MANAGEMENT FACILITY PLANTING PLAN.
3. OPTIMAL PLANTING PERIODS RANGE APPROXIMATELY FROM APRIL 15TH THRU JUNE 30TH AND SEPTEMBER 1ST THRU OCTOBER 31ST. FOR FINAL DETERMINATION OF THE SITE'S PLANTING PERIOD, THE CONTRACTOR SHALL COORDINATE WITH A LANDSCAPE PROFESSIONAL REGARDING SCHEDULING FOR PLANT INSTALLATION.
4. IT IS RECOMMENDED THAT THE CONTRACTOR TAKE MEASURES TO PREVENT WILDLIFE FROM DAMAGING OR CONSUMING WETLAND PLANTINGS.

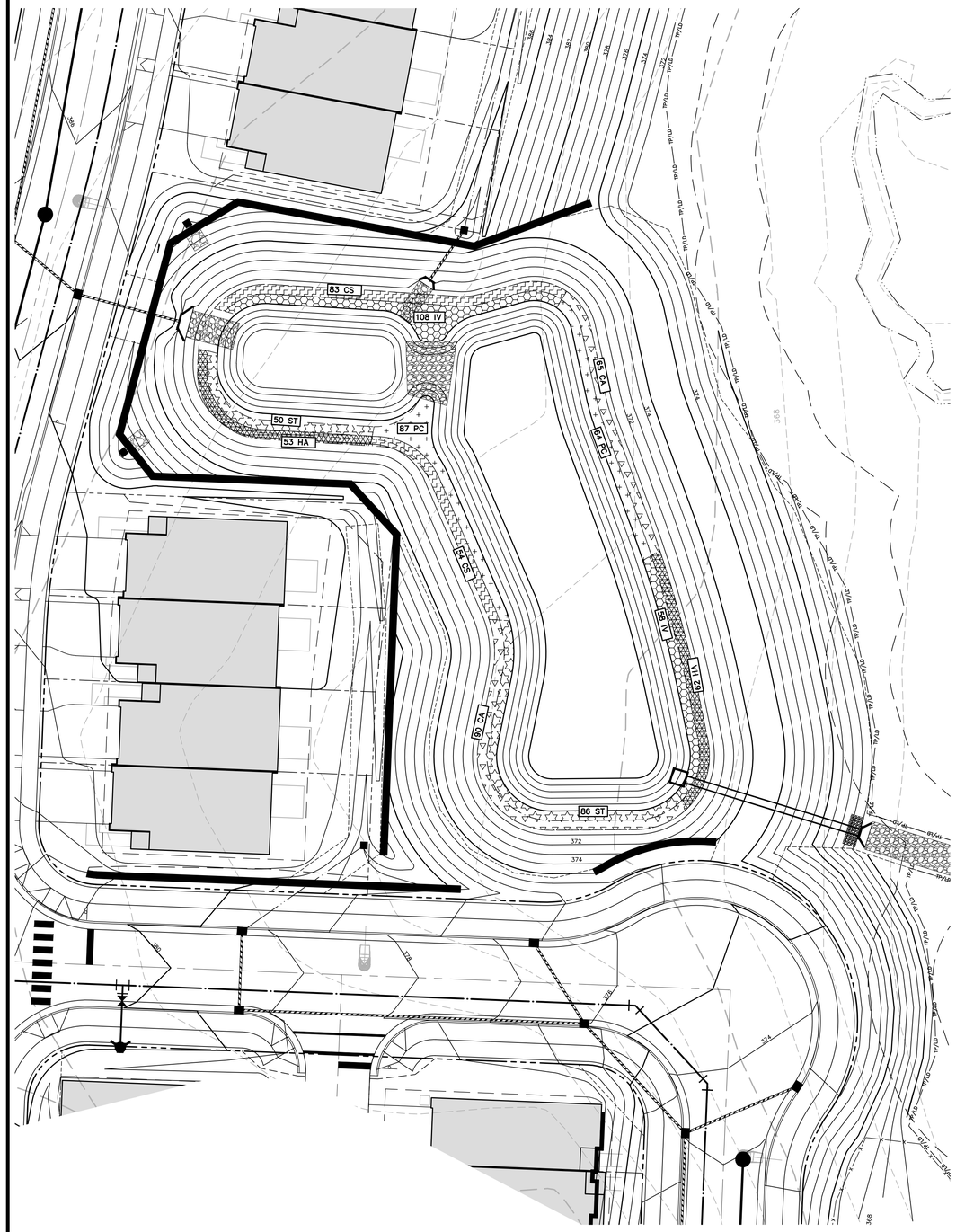

STORMWATER CONTROL MEASURE 'A' LANDSCAPE PLAN VIEW
1" = 20'

GRAPHIC SCALE
0 10 20 40
1 inch = 20 ft.

FINAL DRAWING - RELEASED FOR CONSTRUCTION

McADAMS
The John R. McAdams Company, Inc.
621 Hillsborough Street
Suite 500
Raleigh, NC 27603
phone 919. 361. 5000
fax 919. 361. 2269
license number: C-0293, C-187
www.mcadamsco.com

WALLBROOK LANDCO, LLC
3 KEEL STREET, SUITE 2
WRIGHTSVILLE BEACH, NORTH CAROLINA
28480-1709

WALLBROOK
CONSTRUCTION DRAWINGS
ROLESVILLE, NORTH CAROLINA

NORTH CAROLINA PROFESSIONAL SEAL 043392 ENGINEER DANIEL C. WEBER
2024.08.30 16:44:11 -04'00'

REVISIONS

NO.	DATE	
1	09. 27. 2023	WALL CREEK DRIVE TIE-IN REVISIONS
2	11. 02. 2023	EW-400 REVISION
3	05. 10. 2024	UPDATING SCM B GRADING AND SCM A OUTLET
4	06. 06. 2024	SEWER MANHOLE REVISIONS
5	08. 30. 2024	UPDATED BUILDING FOOTPRINTS AND IMPERVIOUS AREA

PLAN INFORMATION

PROJECT NO.	CPR-19100
FILENAME	CPR-19100-SWA
CHECKED BY	DCW
DRAWN BY	TKD
SCALE	1"=20'
DATE	05. 22. 2023

SHEET

STORMWATER CONTROL MEASURE "A" LANDSCAPE PLAN

C9.A4

X:\Projects\CPR\CPR-19100\04-Production\Water Resources\Construction Drawings\Current Drawings\SCM CD\CPR-19100-SWA.dwg, 8/29/2024 1:10:28 PM, Tommy Dabolt

STORMWATER CONTROL MEASURE 'B' CONSTRUCTION SPECIFICATIONS

GENERAL NOTES

1. PRIOR TO CONSTRUCTION, ANY DISCREPANCIES IN THE PLANS AND NOTES SHALL BE BROUGHT TO THE DESIGN ENGINEER'S ATTENTION IMMEDIATELY.

2. THE PROJECT WILL MEET ALL OF THE REQUIREMENTS RELATIVE TO BEST MANAGEMENT PRACTICES AND ENGINEERED STORMWATER CONTROL STRUCTURES AS OUTLINED IN THE NORTH CAROLINA DEPARTMENT OF ENVIRONMENTAL QUALITY STORMWATER DESIGN MANUAL.

3. THE FINAL CERTIFICATION FOR THIS FACILITY WILL INCLUDE A CERTIFICATION BY THE ON-SITE GEOTECHNICAL ENGINEER THAT THE PROJECT WAS CONSTRUCTED PER THE APPROVED PLANS. IT IS THE RESPONSIBILITY OF THE CONTRACTOR TO COORDINATE WITH THE ON-SITE GEOTECHNICAL ENGINEER FOR OBSERVATION AND TESTING SUCH THAT THE ON-SITE GEOTECHNICAL ENGINEER CAN CERTIFY THE CONSTRUCTION OF THE DAM EMBANKMENT AND SPILLWAY. THIS CERTIFICATION MUST ADDRESS THE TESTING FOR MATERIALS AND COMPACTION OF THE DAM EMBANKMENT AND SPILLWAY.

4. ALL CONSTRUCTION ACTIVITY RELATED TO THE PROPOSED STORMWATER CONTROL MEASURE SHALL BE PER THE DETAILS AND SPECIFICATIONS SHOWN IN THESE DRAWINGS. SOILS, COMPACTION, AND OTHER MISCELLANEOUS DETAILS AND SPECIFICATIONS MAY BE MODIFIED PER THE RECOMMENDATIONS OF THE ON-SITE GEOTECHNICAL ENGINEER. HOWEVER, PRIOR TO IMPLEMENTATION, THE DESIGN ENGINEER SHALL BE NOTIFIED OF ANY DEVIATION FROM THESE DESIGN DRAWINGS, INCLUDING SHOP DRAWINGS FOR ANY PROPOSED MODIFICATION.

5. DURING THE INITIAL STAGES OF CONSTRUCTION, THE STORMWATER CONTROL MEASURE MAY BE USED AS A SEDIMENT BASIN FOR EROSION CONTROL PURPOSES. IF SO, THE CONTRACTOR SHALL FOLLOW THE GENERAL CONSTRUCTION SEQUENCE BELOW:
   A. THE CONTRACTOR SHALL CONSTRUCT THE ENTIRE FACILITY (PERMANENT OUTLET STRUCTURE, DAM, ETC.) WITH THE EXCEPTION OF THE INTERIOR FINE GRADING FOR THE FACILITY. THE INTERIOR FINE GRADING WILL BE CONSTRUCTED ONCE THE EROSION CONTROL PHASE IS COMPLETE.
   B. THE TEMPORARY DRAW DOWN RISER (OR SKIMMER) SHALL BE CONNECTED TO THE PERMANENT 6"Ø DIP DRAIN PIPE.
   C. ONCE THE UPSTREAM DRAINAGE AREA IS STABILIZED AND THE EROSION CONTROL INSPECTOR APPROVES THE REMOVAL OF THE SEDIMENT BASIN, THE CONTRACTOR SHALL REMOVE THE TEMPORARY DRAW DOWN RISER (OR SKIMMER) AND CLEAN OUT THE BASIN. ALL SEDIMENT, TRASH, ETC. SHALL BE DISPOSED OF PROPERLY (I.E. - PLACED IN A LANDFILL) AND NOT STOCKPILED IN AN AREA WHERE WATER QUALITY COULD BE ADVERSELY AFFECTED.
   D. ONCE THE BASIN IS CLEANED OUT, AND ALL EROSION CONTROL DEVICES REMOVED, THE CONTRACTOR SHALL CONSTRUCT THE INTERIOR GRADING SHOWN ON THIS SHEET.
   E. ONCE THE GRADING IS COMPLETE, THE CONTRACTOR SHALL REQUEST AN ON-SITE INSPECTION AND AN AS-BUILT SURVEY PRIOR TO INSTALLATION OF THE STORMWATER CONTROL MEASURE PLANTS. IF THE CONTRACTOR PLANTS THE PROPOSED VEGETATION PRIOR TO AN AS-BUILT SURVEY (AND SUBSEQUENT APPROVAL), ANY CHANGES TO THE GRADING / RE-PLANTING OF PLANTS WILL BE AT THE CONTRACTOR'S EXPENSE.
   F. ONCE THE ENGINEER HAS APPROVED THE AS-BUILT GRADING, THE CONTRACTOR SHALL PLANT THE PROPOSED STORMWATER CONTROL MEASURE PLANTS SHOWN ON THE LANDSCAPE PLAN FOR THE FACILITY. AFTER COMPLETION OF THE PLANTING, THE LANDSCAPE CONTRACTOR SHALL PROVIDE A LETTER TO THE ENGINEER CERTIFYING THAT THE PLANTS HAVE BEEN INSTALLED PER THE APPROVED STORMWATER CONTROL MEASURE PLANTING PLAN.

6. ALL OSHA REQUIREMENTS FOR EXCAVATIONS (SHORING, DEPTH, ETC.) ARE THE RESPONSIBILITY OF THE CONTRACTOR. IF REQUIRED, THE CONTRACTOR SHALL PROVIDE AN EXCAVATION PLAN TO BE SEALED BY A NC P.E. IT IS THE RESPONSIBILITY OF THE CONTRACTOR TO DETERMINE IF AN EXCAVATION PLAN IS REQUIRED. THE JOHN R. MCADAMS COMPANY ASSUMES NO RESPONSIBILITY FOR ANY EXCAVATION DESIGN RELATED TO SAFETY OR OSHA REQUIREMENTS.

7. ON-SITE GEOTECHNICAL ENGINEER TO DETERMINE IF IN-SITU SOILS ENCOUNTERED WOULD MAINTAIN A STORMWATER CONTROL MEASURE PERMANENT POOL AT DESIGN ELEVATION. IF HIGHLY PERMEABLE SOILS ARE ENCOUNTERED THAT WOULD NOT MAINTAIN THE PERMANENT POOL ELEVATION AS DESIGNED, A CLAY LINER MAY BE REQUIRED TO MAINTAIN A PERMANENT POOL OF WATER IN THE STORMWATER CONTROL MEASURE. FINAL DETERMINATION IF A CLAY LINER IS NEEDED SHALL BE THE RESPONSIBILITY OF THE ON-SITE GEOTECHNICAL ENGINEER. UPON DETERMINATION OF HIGHLY PERMEABLE SOIL CONDITIONS, ON-SITE GEOTECHNICAL ENGINEER WILL INFORM THE DESIGN ENGINEER AND RECOMMEND LINER SPECIFICATIONS.

8. IT IS ANTICIPATED THAT DEWATERING WILL BE NECESSARY IN THE EXCAVATION AREAS (E.G. - EMBANKMENT SUB GRADE, INTERIOR PORTIONS OF THE STORMWATER CONTROL MEASURE, KEY TRENCH, ETC.). THEREFORE, THE CONTRACTOR SHALL FURNISH, INSTALL, OPERATE, AND MAINTAIN ANY PUMPING EQUIPMENT, ETC. NEEDED FOR REMOVAL OF WATER FROM VARIOUS PARTS OF THE STORMWATER CONTROL MEASURE SITE. DURING PLACEMENT OF FILL WITHIN THESE AREAS, THE CONTRACTOR SHALL KEEP THE WATER LEVEL BELOW THE BOTTOM OF THE EXCAVATION / CONSTRUCTION AREAS. THE MANNER IN WHICH THE WATER IS REMOVED SHALL BE SUCH THAT THE EXCAVATION BOTTOM AND SIDE SLOPES ARE STABLE, WITH NO SEDIMENT DISCHARGED FROM THE SITE (I.E. PUMPED WATER MAY NEED TO BE DIRECTED TO AN APPROVED EROSION CONTROL DEVICE SUCH AS A DIRT BAG (ACF ENVIRONMENTAL), OR ENGINEER APPROVED EQUIVALENT, PRIOR TO DISCHARGE).

9. THE RETAINING WALL ALIGNMENT SHOWN ON THESE PLANS DEPICTS THE LOCATION OF THE FRONT FACE OF THE RETAINING WALL AT THE BOTTOM.

10. THE RETAINING WALL IS TO BE A DESIGN-BUILD PROJECT(S) BY THE CONTRACTOR. IT SHALL BE THE CONTRACTOR'S RESPONSIBILITY TO OBTAIN FINAL CONSTRUCTION DRAWINGS FROM A REGISTERED PROFESSIONAL ENGINEER AND GAIN ALL REQUIRED PERMITS NECESSARY FOR THE CONSTRUCTION OF THE RETAINING WALL.

11. THE RETAINING WALL SHALL BE ASSUMED TO BE BACKFILLED WITH OFF-SITE BORROW MATERIAL OR PROCESSED FILL UNLESS CONTRACTOR CAN PROVIDE OWNER WITH CONFIRMATION FROM THE GEOTECHNICAL ENGINEER AND THE RETAINING WALL DESIGNER THAT READILY AVAILABLE ON-SITE SOILS CAN BE USED.

12. THE TOP AND BOTTOM OF WALL ELEVATIONS SHOWN ON THESE PLANS IDENTIFY FINISHED GRADE ELEVATIONS ONLY. THE EXTENT THAT THE RETAINING WALL WILL BE EXTENDED BELOW GRADE TO THE FOOTING SHALL BE IDENTIFIED ON THE RETAINING WALL CONSTRUCTION DRAWINGS.

13. THE ON-SITE GEOTECHNICAL ENGINEER SHOULD BE GIVEN AN OPPORTUNITY TO REVIEW ALL RETAINING WALL PLANS AND DESIGNS RELEVANT TO GEOTECHNICAL CONSIDERATIONS PRIOR TO FINAL DESIGN OF THE WALLS.

14. THE GRADES SHOWN ON THIS PLAN ARE FINISHED GRADES. IF THE EXISTING SOIL LAYER AFTER CONSTRUCTION / COMPACTION IS NOT DETERMINED SUITABLE BY A LANDSCAPE PROFESSIONAL FOR THE WET POND PLANTINGS, THEN THE CONTRACTOR SHALL AMEND THE PLANTING AREA OF THE WET POND AS DIRECTED BY A LANDSCAPE PROFESSIONAL.

15. PRIOR TO TOPSOIL INSTALLATION, THE CONTRACTOR SHALL SCARIFY THE TOP 2"-3" OF THE BERM SECTION TO PROMOTE BONDING OF THE TOPSOIL WITH THE COMPACTED FILL. THE TOPSOIL DEPTH SHALL RANGE FROM 3"-4" ON THE DAM EMBANKMENT AND AQUATIC SHELF. PLEASE NOTE THE TOPSOIL SHALL BE AMENDED, AS DIRECTED BY A LANDSCAPE PROFESSIONAL, PRIOR TO INSTALLATION ON THE EMBANKMENT AND AQUATIC SHELF.

16. THE CONTRACTOR SHALL REFER TO THE LANDSCAPE PLAN FOR THE PERMANENT PLANTING PLAN/SCHEDULE FOR THIS FACILITY. CONTRACTOR SHALL COORDINATE WITH A LANDSCAPE PROFESSIONAL REGARDING SCHEDULING FOR PLANT INSTALLATION. PLEASE NOTE THAT NO TREES/SHRUBS OF ANY TYPE MAY BE PLANTED ON THE PROPOSED DAM EMBANKMENT (FILL AREAS).

OUTLET STRUCTURE MATERIAL SPECIFICATIONS

1. THE 36"Ø RCP OUTLET BARREL SHALL BE CLASS III RCP, MODIFIED BELL AND SPIGOT, MEETING THE REQUIREMENTS OF ASTM C76-LATEST. THE PIPES SHALL HAVE CONFINED O-RING RUBBER GASKET JOINTS MEETING ASTM C-443-LATEST. THE PIPE JOINTS SHALL BE TYPE R-4. .

2. THE STRUCTURAL DESIGN FOR THE 5' X 5' (INTERNAL DIMENSIONS) RISER BOX WITH EXTENDED BASE SHALL BE BY OTHERS. PRIOR TO ORDERING THE STRUCTURES, THE CONTRACTOR SHALL PROVIDE, TO THE DESIGN ENGINEER FOR REVIEW, SHOP DRAWINGS AND SUPPORTING STRUCTURAL CALCULATIONS SEALED BY A P.E. REGISTERED IN NORTH CAROLINA DEMONSTRATING THE PERTINENT VERTICAL LOADS ARE SUPPORTED BY THE CONCRETE RISER STRUCTURE.

3. THE RISER BOX OUTLET STRUCTURE SHALL BE PROVIDED WITH STEPS 16" ON CENTER. STEPS SHALL BE PROVIDED ON THE INNER WALL OF THE RISER BOX. STEPS SHALL BE IN ACCORDANCE WITH NCDOT STD. 840.66. PLEASE REFER TO SHEET C9.B3 FOR LOCATION OF THE RISER STEPS. NOTE THE STEPS SHALL LINE UP WITH THE ACCESS HATCH OF THE TRASH RACK.

4. THE CONCRETE ANTI-FLOTATION BLOCK SHALL BE CAST-IN-PLACE. STEEL REINFORCEMENT AND CONNECTION TO THE RISER SHALL BE PROVIDED IN ACCORDANCE WITH THE DETAIL ON SHEET C9.B3. THE CONTRACTOR SHALL ENSURE THE WEIGHT OF THE ENTIRE RISER STRUCTURE IS GREATER THAN OR EQUAL TO 45,100 LBS. IN LIEU OF CAST-IN-PLACE, THE CONTRACTOR MAY OPT FOR A PRECAST ANTI-FLOTATION BLOCK. SHOP DRAWINGS FOR THE PRECAST BLOCK SHALL BE SUBMITTED TO THE ENGINEER FOR REVIEW. THE PRECAST ANTI-FLOTATION BLOCK SHALL HAVE A SHIPPING WEIGHT OF 16,345 LBS.

5. THE RISER BOX JOINTS SHALL BE SEALED USING BUTYL RUBBER SEALANT CONFORMING TO ASTM-C990-LATEST. IF NECESSARY, THE CONTRACTOR SHALL INCORPORATE A WATERSTOP INTO THE RISER BOX JOINT TO ENSURE A WATERTIGHT CONNECTION. THE CONTRACTOR SHALL PARGE JOINTS ON BOTH THE INSIDE AND OUTSIDE WITH NON-SHRINK GROUT AND INSTALL GALVANIZED STEEL STRAPS PER DETAIL ON SHEET C9.B2.

6. PRIOR TO ORDERING, THE CONTRACTOR SHALL SUBMIT TRASH RACK SHOP DRAWINGS TO THE ENGINEER FOR REVIEW. CONTRACTOR SHALL ENSURE THAT AN ACCESS HATCH IS PROVIDED WITHIN THE TRASH RACK (SEE DETAIL FOR LOCATION) THAT WILL ALLOW FOR FUTURE MAINTENANCE ACCESS. CONTRACTOR SHALL ALSO PROVIDE A CHAIN AND LOCK FOR SECURING THE ACCESS HATCH. NOTE THE ACCESS HATCH SHALL LINE UP WITH THE ACCESS STEPS AFTER INSTALLATION.

7. ALL POURED CONCRETE SHALL MEET THE FOLLOWING SPECIFICATIONS UNLESS OTHERWISE NOTED:

   -MINIMUM 3000 PSI (28 DAY)
   -SLUMP = 3" - 5"
   -ENTRAINED AIR = 5% - 7%

   PLEASE NOTE NO CONCRETE SHALL BE POURED WHEN THE AMBIENT AIR TEMPERATURES ARE EXPECTED TO BE ABOVE 85°F OR BELOW 40°F. CAST-IN-PLACE CONCRETE SHALL BE "WET CURED" AFTER FINISHING FOR A MINIMUM OF 48 HOURS.

   ON-SITE GEOTECHNICAL ENGINEER TO ENSURE AND CERTIFY ALL POURED CONCRETE MEETS THE ABOVE SPECIFICATIONS.

8. GEOTEXTILE FABRIC FOR THE 36"Ø RCP OUTLET BARREL JOINTS SHALL BE MIRAFI 180N OR ENGINEER APPROVED EQUAL (NON-WOVEN FABRIC).

9. STORMWATER CONTROL MEASURE EMERGENCY DRAW DOWN IS VIA AN 6"Ø PLUG VALVE. THE VALVE SHALL BE A M&H STYLE 1820 ECCENTRIC VALVE OR APPROVED EQUAL. THIS VALVE IS IN ACCORDANCE WITH AWWA C-517, AND SHALL BE OPERABLE FROM TOP OF OUTLET STRUCTURE VIA A HAND WHEEL (SEE DETAIL SHEET C9.B2). THE CONTRACTOR SHALL PROVIDE A REMOVABLE VALVE WRENCH WITH A HAND WHEEL ON TOP FOR OPERATION OF THE 6"Ø PLUG VALVE.

CONSTRUCTION SEQUENCE

1. PRIOR TO CONSTRUCTION, THE OWNER SHALL OBTAIN A LAND DISTURBING (GRADING) PERMIT AND AN "APPROVAL TO CONSTRUCT" FROM THE TOWN OF ROLESVILLE AND ALL OTHER NECESSARY PERMITS FROM APPLICABLE AGENCIES (E.G. 404 / 401 PERMITS)

2. INSTALL ALL SEDIMENT AND EROSION CONTROL MEASURES PER THE APPROVED SEDIMENT AND EROSION CONTROL PLAN. THE CONTRACTOR SHALL MAINTAIN ALL APPROVED SEDIMENT AND EROSION CONTROL MEASURES THROUGHOUT THE ENTIRE PROJECT, AS REQUIRED. THE CONTRACTOR SHALL RECEIVE APPROVAL FROM THE EROSION CONTROL INSPECTOR, AS REQUIRED BY GOVERNING AGENCIES, PRIOR TO ANY CLEARING.

3. CLEAR AND GRUB AREA WITHIN THE LIMITS OF THE PROPOSED DAM CONSTRUCTION. ALL TREES AND THEIR ENTIRE ROOT SYSTEMS MUST BE REMOVED FROM THE DAM FOOTPRINT AREA AND BACKFILLED WITH SUITABLE SOIL MATERIAL. THE BACKFILLED AREAS SHALL BE COMPACTED TO THE SAME STANDARDS AS THE DAM EMBANKMENT. THE REMAINING AREA OF THE EMBANKMENT SHALL BE STRIPPED TO A SUITABLE DEPTH AS DIRECTED BY THE ON-SITE GEOTECHNICAL ENGINEER. ANY RESIDUAL SOILS TO BE LEFT IN PLACE MUST BE WELL SCARIFIED TO PROMOTE BONDING OF THE NEW EMBANKMENT FILL. NO EMBANKMENT MATERIAL SHALL BE PLACED FOR THE DAM OR KEY TRENCH UNTIL APPROVAL OF THE DAM SUBGRADE IS OBTAINED FROM THE ON-SITE GEOTECHNICAL ENGINEER.

4. EXCAVATE FOR THE NEW KEY TRENCH ALONG THE CENTERLINE OF THE PROPOSED DAM EMBANKMENT. THE TRENCH SHALL EXTEND A MINIMUM OF 5 FT BELOW EXISTING GRADE OR 2 FT BELOW THE 36"Ø RCP OUTLET BARREL AND SHALL HAVE A MINIMUM BOTTOM WIDTH OF 5 FEET. THE KEY TRENCH SIDESLOPES SHALL BE A MINIMUM OF 1:1 (H:V). WHEN EXCAVATING THE KEY TRENCH, IF ANY DEBRIS IS ENCOUNTERED TO AN EXTENT THAT SUCH DEBRIS MAY EXIST IN OTHER INSITU PORTIONS OF THE DAM EMBANKMENT, IT SHOULD ALSO BE REMOVED. THE KEY TRENCH SHALL BE COMPACTED TO THE SAME SPECIFICATION LISTED IN ITEM 4 OF THE SECTION TITLED "BERM AND SOIL COMPACTION SPECIFICATIONS." DEPENDING UPON ON-SITE SOIL CONDITIONS ENCOUNTERED DURING EXCAVATION, THE ON-SITE GEOTECHNICAL ENGINEER MAY VARY THE DEPTH AND DIMENSIONS OF THE KEY TRENCH AS DEEMED NECESSARY. THE ON-SITE GEOTECHNICAL ENGINEER SHALL RETAIN DOCUMENTATION OF ANY VARIATION FOR FUTURE AS-BUILT SUBMITTALS TO THE TOWN OF ROLESVILLE.

5. BEGIN PLACEMENT OF BACKFILL WITHIN THE KEY TRENCH. THE KEY TRENCH SHALL BE COMPACTED TO THE SPECIFICATIONS LISTED ITEM 4 OF THE SECTION TITLED "BERM AND SOIL COMPACTION SPECIFICATIONS." THE KEY TRENCH SHALL BE TESTED PER THE SPECIFICATIONS LISTED IN THAT SECTION.

6. PRIOR TO INSTALLATION, SUBGRADE CONDITIONS ALONG THE SPILLWAY PIPES SHOULD BE EVALUATED BY THE ON-SITE GEOTECHNICAL ENGINEER TO ASSESS WHETHER SUITABLE BEARING CONDITIONS EXIST AT THE SUBGRADE LEVEL. SHOULD SOFT OR OTHERWISE UNSUITABLE CONDITIONS BE ENCOUNTERED ALONG THE PIPE ALIGNMENTS, THESE MATERIALS SHOULD BE UNDERCUT AS DIRECTED BY THE GEOTECHNICAL ENGINEER. THE UNDERCUT MATERIALS SHALL BE REPLACED WITH ADEQUATELY COMPACTED STRUCTURAL FILL, LEAN CONCRETE OR FLOWABLE FILL AS DIRECTED BY THE ON-SITE GEOTECHNICAL ENGINEER.

7. IN ORDER TO HELP PROTECT THE SOIL SUBGRADE FROM DETERIORATION (DUE TO EXPOSURE, RAINFALL, SEEPAGE, AND RUNOFF) BEFORE THE CRADLE CAN BE POURED, IT IS STRONGLY RECOMMENDED THAT A 3" TO 4" THICK CONCRETE MUD MAT BE POURED OVER THE SUBGRADE ONCE IT IS APPROVED BY THE ON-SITE GEOTECHNICAL ENGINEER. THE MUD MAT WILL ALSO PROVIDE BEARING FOR THE BLOCKS THAT TEMPORARILY SUPPORT THE SPILLWAY PIPE UNTIL THE CRADLE CAN BE POURED. THE METHOD OF BLOCK SUPPORT FOR THE PIPE PROPOSED BY THE CONTRACTOR SHOULD BE SUBMITTED TO THE JOHN R. McADAMS COMPANY FOR REVIEW.

8. BEGIN CONSTRUCTION OF THE NEW EMBANKMENT. FILL MATERIALS SHALL BE PLACED IN MAXIMUM 8" THICK LIFTS PRIOR TO COMPACTION, UNLESS DIRECTED OTHERWISE BY THE ON-SITE GEOTECHNICAL ENGINEER. FILL LIFTS SHALL BE CONTINUOUS OVER THE ENTIRE LENGTH OF FILL. IF IT IS NECESSARY, THE EMBANKMENT FILL MATERIAL WILL BE OVERBUILT IN HORIZONTAL LIFTS AND CUT BACK TO FINAL GRADE IN ORDER TO ACHIEVE PROPER COMPACTION.

9. AS CONSTRUCTION OF THE EMBANKMENT MOVES FORWARD, IT WILL BE NECESSARY TO INSTALL THE CONCRETE CRADLE. SEE NOTE ON CRADLE DETAIL (SHEET C9.B3). THIS MAY BE CONSTRUCTED USING ONE OF THE FOLLOWING METHODS:

   A. IF THE PROPOSED STRUCTURAL FILL MATERIAL IS UTILIZED AS THE FORMWORK FOR THE CONCRETE CRADLE, THEN THE STRUCTURAL FILL SHOULD BE INSTALLED AND COMPACTED UP TO THE TOP OF CONCRETE CRADLE ELEVATION. ONCE THE STRUCTURAL FILL REACHES THE NEXT DOWNSTREAM JUNCTION BOX OR HEADWALL AND IS COMPACTED TO THE ELEVATION OF THE TOP OF THE CONCRETE CRADLE, EXCAVATE THE CONCRETE CRADLE TRENCH PER THE PROVIDED DETAILS AND CONSTRUCT THE CONCRETE CRADLE AS PER THE PROVIDED CONCRETE CRADLE DETAIL.

   B. IF THE PROPOSED STRUCTURAL FILL IS NOT UTILIZED AS THE FORMWORK FOR THE CONCRETE CRADLE, THEN PRIOR TO CONSTRUCTING THE STRUCTURAL FILL EMBANKMENT, THE FORMWORK FOR THE CONCRETE CRADLE SHOULD BE INSTALLED ON EXISTING GROUND AND/OR THE MUD MAT. THE CONCRETE CRADLE SHALL BE CONSTRUCTED PER THE PROVIDED DETAILS

10. INSTALL RISER / BARREL ASSEMBLY, ALONG WITH THE EMERGENCY DRAIN SYSTEM. INSTALL 36" RCP OUTLET BARREL SPILLWAY FILTER FROM THE DETAILS SHOWN ON SHEET C9.B3.

11. CONSTRUCT EMBANKMENT PER SPECIFICATIONS LISTED IN THE SECTION TITLED "BERM AND SOIL COMPACTION SPECIFICATIONS" AND REQUIREMENTS OF THE ON-SITE GEOTECHNICAL ENGINEER. ALL CHARACTERISTICS OF THE EMBANKMENT FILL MATERIAL SHALL MEET THE STANDARDS SET FORTH IN "BERM AND SOIL COMPACTION SPECIFICATIONS", INCLUDING COMPACTION AND MOISTURE REQUIREMENTS. IF NECESSARY TO ACHIEVE PROPER COMPACTION, THE EMBANKMENT FILL MATERIAL WILL BE OVERBUILT IN HORIZONTAL LIFTS AND CUT BACK TO PROPER FINAL GRADE. ANY HAND COMPACTION ACTIVITIES AROUND SPILLWAY OR DRAIN STRUCTURES SHALL BE CONDUCTED IN 4-INCH LOOSE LIFTS AND BE TO THE SAME COMPACTION AND MOISTURE REQUIREMENTS AS THE ENTIRE EMBANKMENT. ALL COMPACTION AND MOISTURE TESTING SHALL BE CARRIED OUT AS DIRECTED BY THE ON-SITE GEOTECHNICAL ENGINEER AND AS LISTED IN THE SECTION TITLED "BERM AND SOIL COMPACTION SPECIFICATIONS".

12. UPON COMPLETION OF DAM EMBANKMENT, PROMPTLY STABILIZE AND SEED DAM EMBANKMENT PER SEEDING SCHEDULE. PERMANENT GROUND COVER SHALL BE ESTABLISHED PER THE PERMANENT SEEDING SCHEDULE FOUND ON SHEET C9.B4.

13. SCHEDULE A FINAL AS-BUILT INSPECTION AND AS-BUILT SURVEY WITH THE ENGINEER AND SURVEYOR. AN AS-BUILT INSPECTION AND SURVEY SHALL BE SCHEDULED BEFORE IMPOUNDING WATER IN THE FACILITY AND A MINIMUM OF 60 DAYS PRIOR TO THE ANTICIPATED DATE OF CERTIFICATION APPROVAL. ANY COMMENTS OR DEFICIENCIES IN THE SCM CONSTRUCTION MUST BE CORRECTED TO THE SATISFACTION OF THE ENGINEER AND OWNER BEFORE CERTIFICATION SHALL BE GRANTED.

BERM AND SOIL COMPACTION SPECIFICATIONS

1. PRIOR TO CONSTRUCTION, THE ON-SITE GEOTECHNICAL ENGINEER SHALL IDENTIFY BORROW / FILL AREAS AND VERIFY THEIR SUITABILITY FOR USE WITHIN THE DAM EMBANKMENT. ALSO, THE ON-SITE GEOTECHNICAL ENGINEER SHALL PERFORM STANDARD PROCTORS ON THE PROPOSED BORROW MATERIAL TO ENSURE THAT OPTIMUM MOISTURE CONTENT AND COMPACTION CAN BE ACHIEVED / CONTROLLED DURING CONSTRUCTION.

2. ALL FILL MATERIALS TO BE USED FOR THE DAM EMBANKMENT SHALL BE TAKEN FROM BORROW AREAS APPROVED BY THE ON-SITE GEOTECHNICAL ENGINEER. THE FILL MATERIAL SHALL BE FREE FROM ROOTS, STUMPS, WOOD, STONES GREATER THAN 6", AND FROZEN OR OTHER OBJECTIONABLE MATERIAL. THE FOLLOWING SOIL TYPES ARE SUITABLE FOR USE AS FILL WITHIN THE DAM EMBANKMENT AND KEY TRENCH: ML AND CL. ALL FILL MATERIALS SHALL BE APPROVED BY THE ONSITE GEOTECHNICAL ENGINEER FOR THE INTENDED USE.

3. FILL PLACEMENT FOR THE EMBANKMENT SHALL NOT EXCEED A MAXIMUM 8" LIFT (UNCOMPACTED). EACH LIFT SHALL BE CONTINUOUS FOR THE ENTIRE LENGTH OF EMBANKMENT. BEFORE PLACEMENT OF FILL FOR THE BERM SECTION, ALL UNSUITABLE MATERIAL SHALL BE REMOVED AND THE SURFACE PROPERLY PREPARED FOR FILL PLACEMENT. FILL MATERIAL ADJACENT TO ALL SPILLWAY AND DRAINAGE STRUCTURES SHALL BE PLACED IN 4-INCH (UNCOMPACTED) LIFTS AND HAND-COMPACTED TO THE SAME COMPACTION AND MOISTURE REQUIREMENTS AS THE ENTIRE EMBANKMENT.

4. ALL FILL SOILS USED IN THE EMBANKMENT CONSTRUCTION SHALL BE COMPACTED TO AT LEAST 95% OF THE STANDARD PROCTOR MAXIMUM DRY DENSITY (ASTM D-698). THE FILL SOILS SHALL BE COMPACTED AT A MOISTURE CONTENT WITHIN -1 TO +3 PERCENT OF ITS OPTIMUM MOISTURE CONTENT. COMPACTION TESTS SHALL BE PERFORMED BY THE ON-SITE GEOTECHNICAL ENGINEER DURING CONSTRUCTION TO VERIFY THAT THE PROPER COMPACTION LEVEL HAS BEEN REACHED. THE FILL SHOULD BE COMPACTED USING A SHEEPSFOOT TYPE COMPACTOR. IN ORDER TO PREVENT DAMAGE TO THE PIPE, NO COMPACTION EQUIPMENT SHALL CROSS ANY PIPE UNTIL MINIMUM COVER IS ESTABLISHED ALONG THE PIPE.

5. THE DESIGN ENGINEER SHALL BE PROVIDED WITH REPORTS AND CERTIFICATION, BY THE ON-SITE GEOTECHNICAL ENGINEER, THAT THE GEOTECHNICAL ASPECTS OF THE FACILITY HAVE BEEN CONSTRUCTED PER PLAN. THIS CERTIFICATION MUST ADDRESS THE TESTING FOR MATERIALS AND COMPACTION OF THE DAM EMBANKMENT AND SPILLWAY. THESE REPORTS AND CERTIFICATION WILL BE NEEDED DURING THE AS-BUILT CERTIFICATION PROCESS FOR THIS STORMWATER CONTROL MEASURE. THEREFORE, IT SHALL BE THE CONTRACTOR'S RESPONSIBILITY TO COORDINATE TESTING AND OBSERVATION WITH THE ON-SITE GEOTECHNICAL ENGINEER.

6. TESTING OF THE NEW FILL MATERIALS SHALL BE PERFORMED TO VERIFY THAT THE RECOMMENDED LEVEL OF COMPACTION IS ACHIEVED DURING CONSTRUCTION. THEREFORE, ONE DENSITY TEST SHALL BE PERFORMED FOR EVERY 2,500 SQUARE FEET OF AREA FOR EVERY LIFT OF FILL OR AS RECOMMENDED BY THE ON-SITE GEOTECHNICAL ENGINEER.

7. TESTING WILL BE REQUIRED ALONG THE 36"Ø RCP OUTLET BARREL AT A FREQUENCY OF ONE TEST PER 25 LF OF PIPE PER VERTICAL FOOT OF FILL OR AS DIRECTED BY THE ON-SITE GEOTECHNICAL ENGINEER.

STATEMENT OF RESPONSIBILITY

1. ALL REQUIRED MAINTENANCE AND INSPECTIONS OF THE STORMWATER CONTROL MEASURE SHALL BE THE RESPONSIBILITY OF THE OWNER, PER THE EXECUTED OPERATION AND MAINTENANCE AGREEMENT FOR THIS FACILITY.

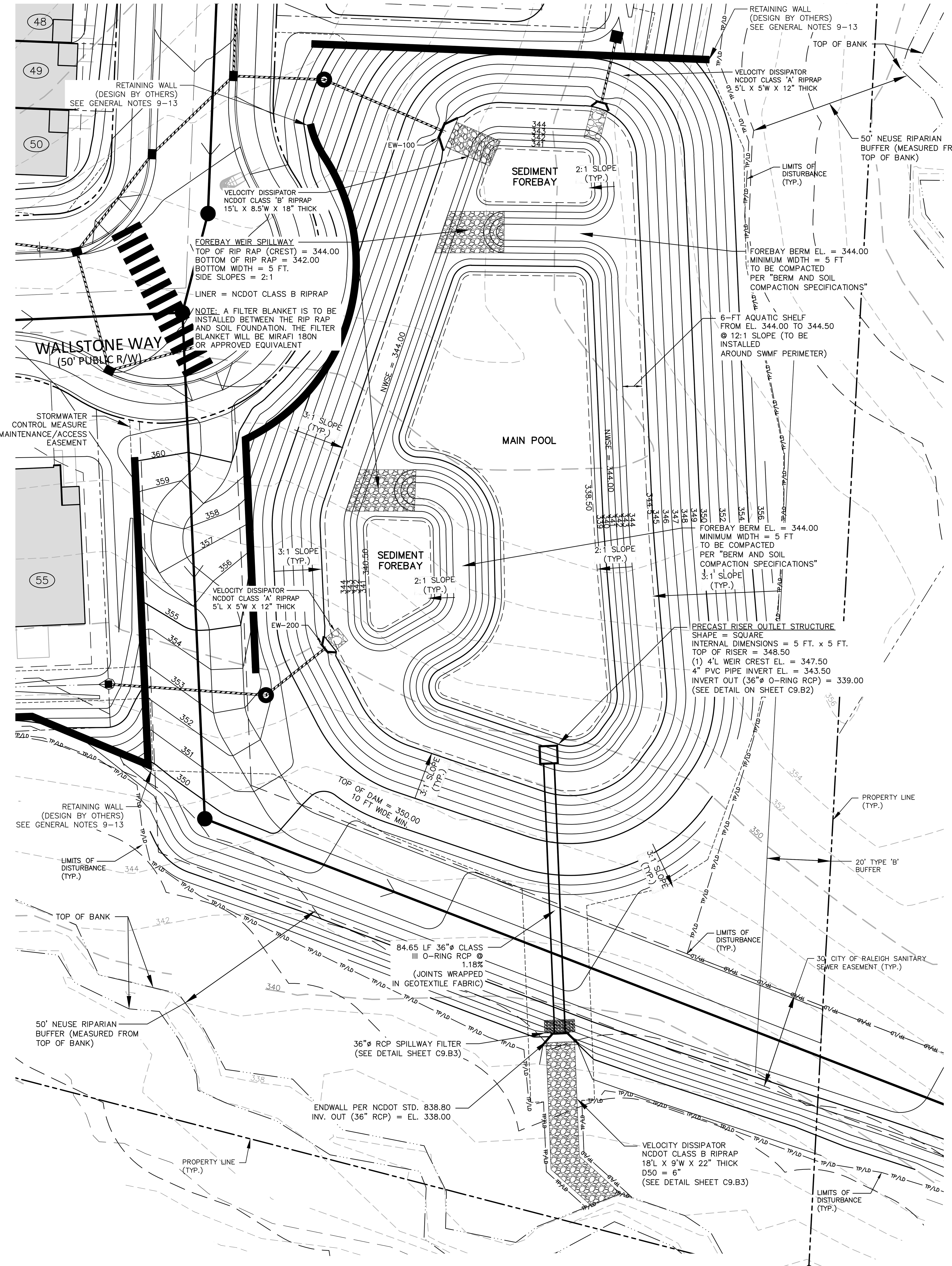

STORMWATER CONTROL MEASURE 'B' PLAN VIEW

1" = 20'

GRAPHIC SCALE 0 10 20 40 — 1 inch = 20 ft.

N

McADAMS
The John R. McAdams Company, Inc.
621 Hillsborough Street
Suite 500
Raleigh, NC 27603
phone 919. 361. 5000
fax 919. 361. 2269
license number: C-0293, C-187
www.mcadamsco.com

WALLBROOK LANDCO, LLC
3 KEEL STREET, SUITE 2
WRIGHTSVILLE BEACH, NORTH CAROLINA
28480-1709

WALLBROOK
CONSTRUCTION DRAWINGS
ROLESVILLE, NORTH CAROLINA

NORTH CAROLINA PROFESSIONAL ENGINEER SEAL 043300 DANIEL C. WIEBKE 2024.08.30 16:44:36 -04'00'

REVISIONS

NO.	DATE	
1	09. 27. 2023	WALL CREEK DRIVE TIE-IN REVISIONS
2	11. 02. 2023	EW-400 REVISION
3	05. 10. 2024	UPDATING SCM B GRADING AND SCM A OUTLET
4	06. 06. 2024	SEWER MANHOLE REVISIONS
5	08. 30. 2024	UPDATED BUILDING FOOTPRINTS AND IMPERVIOUS AREA

PLAN INFORMATION

PROJECT NO.	CPR-19100
FILENAME	CPR-19100-SWB
CHECKED BY	DCW
DRAWN BY	TKD
SCALE	1" = 20'
DATE	05. 22. 2023

SHEET

STORMWATER CONTROL MEASURE "B" PLAN VIEW

C9.B1

FINAL DRAWING - RELEASED FOR CONSTRUCTION

X:\Projects\CPR\CPR-19100\04-Production\Water Resources\Construction Drawings\Current Drawings\SCM CDs\CPR-19100-SWB.dwg, 8/29/2024 1:07:42 PM, Tommy Dabolt

NOTE:

1. REMOVED TOPSOIL SHALL BE STOCKPILED FOR USE IN PLANTING (SEEDING) THE DAM EMBANKMENT ONCE FINAL GRADES (AS SHOWN ON THE GRADING PLAN) HAVE BEEN ESTABLISHED WITH COMPACTED FILL. PRIOR TO TOPSOIL INSTALLATION, THE CONTRACTOR SHALL SCARIFY THE TOP 2– TO 3–INCHES OF THE BERM SECTION TO PROMOTE BONDING OF THE TOPSOIL WITH THE COMPACTED FILL. THE TOPSOIL DEPTH SHALL RANGE FROM 3– TO 4–INCHES ON THE DAM EMBANKMENT.

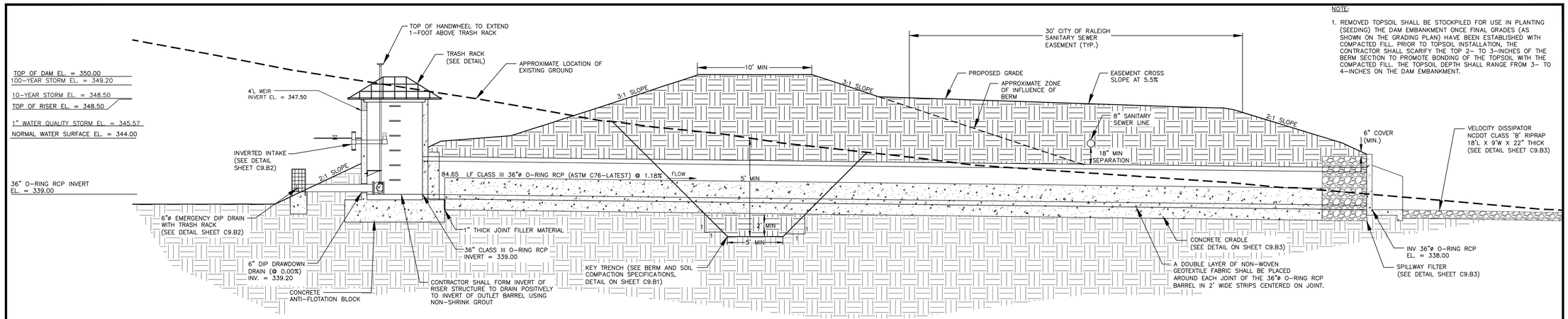

PERMANENT DAM CROSS SECTION

N.T.S.

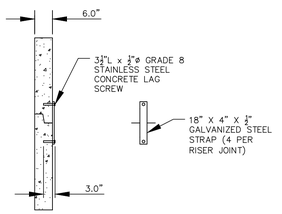

RISER JOINT CONNECTION DETAIL

N.T.S.

NOTES:

1. CONCRETE ANTI-FLOTATION BLOCK TO BE PROVIDED WITH MINIMUM TEMPERATURE AND SHRINKAGE STEEL REINFORCEMENT.

2. TRASH RACKS NOT SHOWN FOR CLARITY.

3. THE NUMBER OF GUIDES FOR THE VALVE STEM SHALL BE DETERMINED IN THE FIELD BY THE CONTRACTOR. THE VALVE STEM MUST BE OPERABLE FROM THE TOP OF THE RISER VIA THE HANDWHEEL WITH AN INSIGNIFICANT AMOUNT OF PLAY IN THE VALVE STEM.

4. CONTRACTOR SHALL PROVIDE A JOINT IN THE OUTLET BARREL NO MORE THAN 5-FT FROM THE RISER.

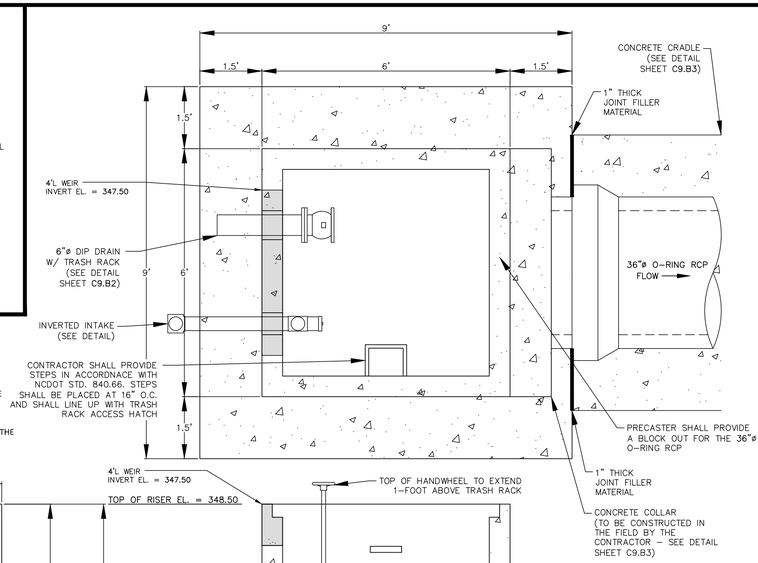

NOTES:
1. ALL REBAR TO BE #4 REBAR.
2. ALL REBAR AND ANGLES TO BE HOT–DIPPED GALVANIZED AND BE PROVIDED WITH AN EPOXY COATING.
3. THE HOT–DIPPED, GALVANIZED 2"x2"x1/4" ANGLES SHALL BE WELDED TO THE REBAR TRASH RACK. ONCE WELDED, THE ENTIRE ASSEMBLY SHALL BE PLACED ONTO THE RISER WITH ANGLES SITTING DIRECTLY ON TOP OF RISER.
4. TRASH RACK IS TO BE SECURELY FASTENED TO THE SPILLWAY RISER WITH A MINIMUM OF FOUR CORROSION–RESISTANT ANCHORS.
5. ACCESS HATCH SHALL ALIGN WITH STEPS IN RISER.

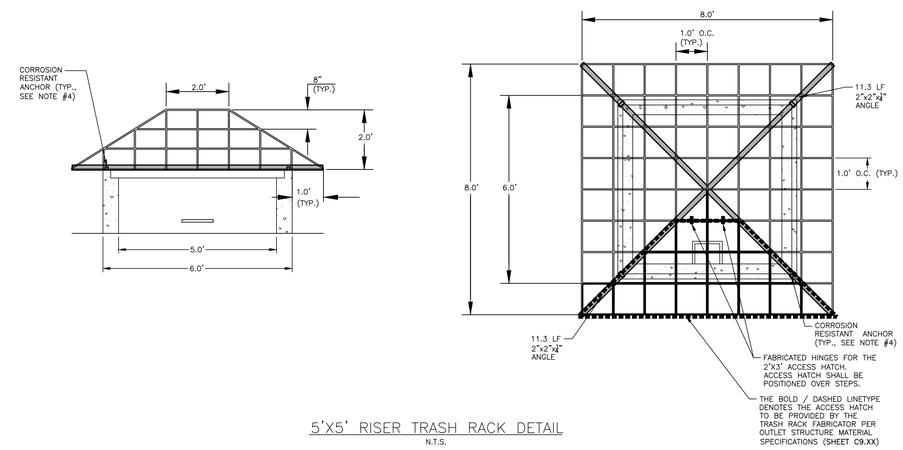

5'X5' RISER TRASH RACK DETAIL

N.T.S.

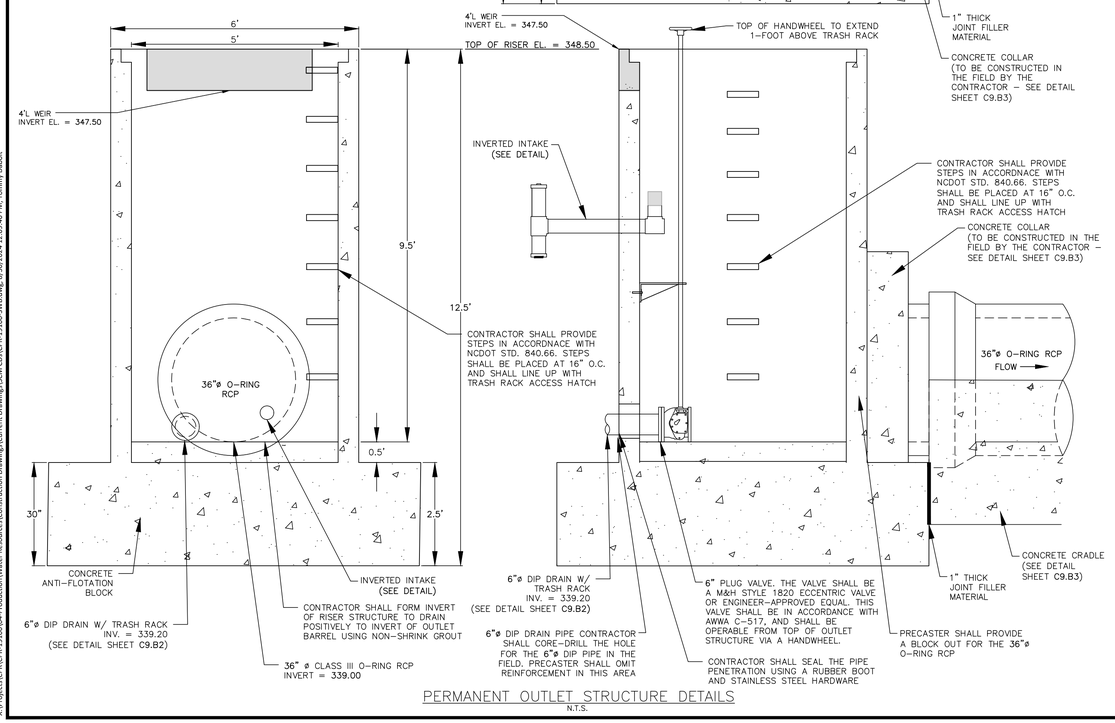

PERMANENT OUTLET STRUCTURE DETAILS

N.T.S.

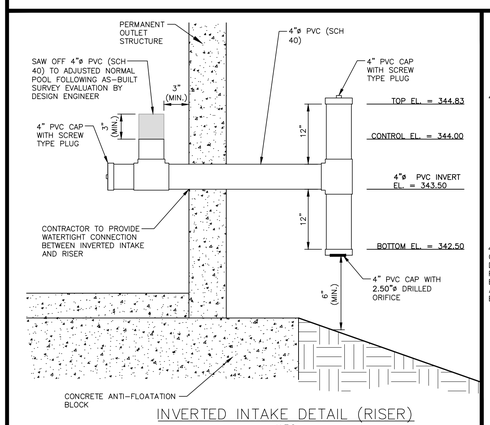

INVERTED INTAKE DETAIL (RISER)

N.T.S.

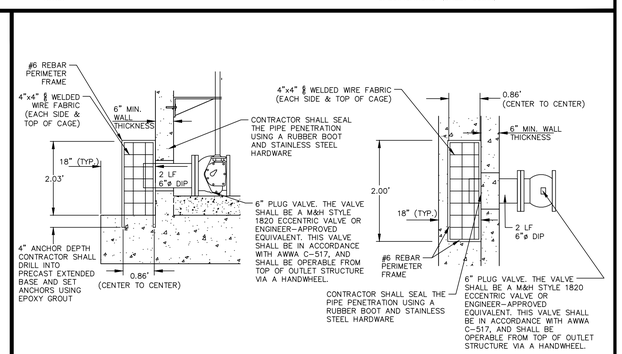

6"ø EMERGENCY DIP DRAIN TRASH RACK DETAILS

N.T.S.

FINAL DRAWING - RELEASED FOR CONSTRUCTION

McADAMS

The John R. McAdams Company, Inc.
621 Hillsborough Street
Suite 500
Raleigh, NC 27603

phone 919. 361. 5000
fax 919. 361. 2269
license number: C-0293, C-187

www.mcadamsco.com

WALLBROOK LANDCO, LLC
3 KEEL STREET, SUITE 2
WRIGHTSVILLE BEACH, NORTH CAROLINA
28480-1709

WALLBROOK
CONSTRUCTION DRAWINGS
ROLESVILLE, NORTH CAROLINA

NORTH CAROLINA PROFESSIONAL SEAL 042364 ENGINEER DANIEL C. WIEBKE
2024.04.30 14:58:40 -04'00'

REVISIONS

NO.	DATE	
1	09. 27. 2023	WALL CREEK DRIVE TIE-IN REVISIONS
2	11. 02. 2023	EW-400 REVISION
3	05. 10. 2024	UPDATING SCM B GRADING AND SCM A OUTLET
4	06. 06. 2024	SEWER MANHOLE REVISIONS
5	08. 30. 2024	UPDATED BUILDING FOOTPRINTS AND IMPERVIOUS AREA

PLAN INFORMATION

PROJECT NO.	CPR-19100
FILENAME	CPR-19100-SWB
CHECKED BY	DCW
DRAWN BY	TKD
SCALE	N.T.S
DATE	05. 22. 2023

SHEET

STORMWATER CONTROL MEASURE "B" DETAILS

C9.B2

X:\Projects\CPR\CPR-19100\04-Production\Water Resources\Construction Drawings\Current Drawings\SCM C\Dv\CPR-19100-SWB.dwg, 8/30/2024 12:09:46 PM, Tommy Dabolt

NOTES:

1. ALL REBAR TO BE #4 REBAR.
2. WRAP OUTSIDE OF PIPE WITH VOLCLAY WATERSTOP-RX® 101 (OR PRE-APPROVED EQUIVALENT) AT THE FACE OF THE PRECAST STRUCTURE WALL. PROVIDE 6" OVER LAP ON THE BOTTOM OF THE PIPE.

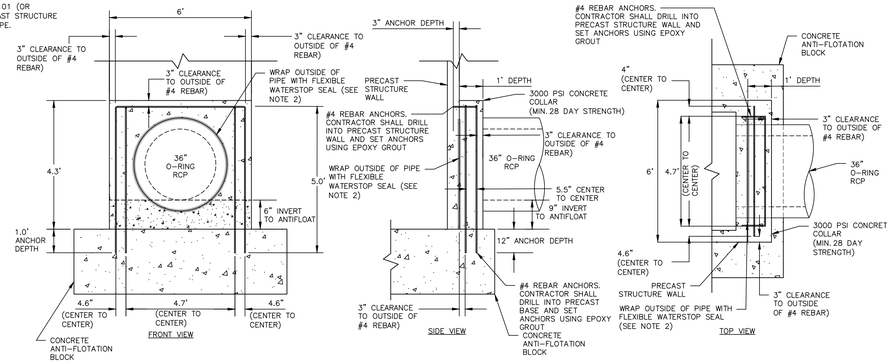

36"ø CONCRETE COLLAR DETAIL

N.T.S.

NOTE:

1. HAVILAND DRAINAGE PRODUCTS 4" ALUMINUM ANIMAL GUARD ITEM NUMBER AGSS04 (OR ENGINEER APPROVED EQUIVALENT) TO BE INSTALLED AT OUTLET OF 4" HDPE PIPES

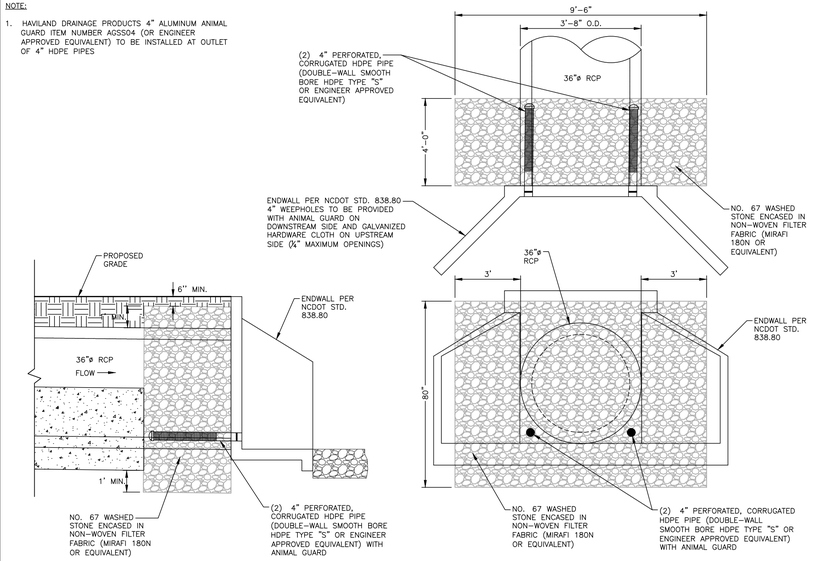

36" SPILLWAY FILTER DETAIL

N.T.S.

NOTES:

1. A FILTER BLANKET IS TO BE INSTALLED BETWEEN THE RIPRAP AND SOIL FOUNDATION. THE FILTER BLANKET WILL CONSIST OF A MINIMUM 4" THICK LAYER OF STONE (NCDOT #57) UNDERLAIN WITH MIRAFI FILTER WEAVE 700 OR ENGINEER-APPROVED EQUIVALENT.
2. RIPRAP TO EXTEND TO TOP OF CHANNEL WITH 2:1 SIDE SLOPES THROUGHOUT THE EXTENT OF CHANNEL.

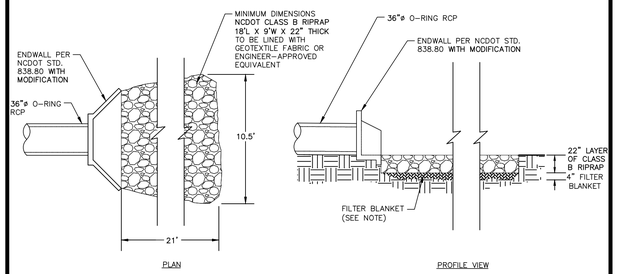

OUTLET BARREL VELOCITY DISSIPATER

N.T.S.

NOTE:

1. CONTRACTOR SHALL PROVIDE A JOINT IN THE OUTLET BARREL NO MORE THAN 5-FT FROM THE RISER.

BARREL PIPE CONCRETE CRADLE CONSTRUCTION SEQUENCE

1. IF OPTION A IS CHOSEN FROM NOTE 9 OF THE OUTLET STRUCTURE MATERIAL SPECIFICATIONS, THEN BRING GRADE OF DAM EMBANKMENT TO SPRINGLINE OF PIPE ELEVATION. IF OPTION B IS CHOSEN FROM NOTE 9 OF THE OUTLET STRUCTURE MATERIAL SPECIFICATIONS, THEN CONSTRUCT FORMWORK FOR CONCRETE CRADLE ON EXISTING GRADE.
2. IF OPTION A IS CHOSEN FROM NOTE 9 OF THE OUTLET STRUCTURE MATERIAL SPECIFICATIONS, THEN EXCAVATE TRENCH FOR CRADLE AND BARREL PER DIMENSIONS ON DRAWINGS. IF OPTION B IS CHOSEN FROM NOTE 9 OF THE OUTLET STRUCTURE MATERIAL SPECIFICATIONS, PROCEED TO STEP 3 BELOW.
3. PLACE BARREL PIPE ON CONCRETE BLOCKS TO GRADE. AT THIS STEP, CONTRACTOR SHALL WRAP A DOUBLE LAYER OF NON-WOVEN GEOTEXTILE FABRIC AROUND EACH JOINT OF THE 36"ø O-RING RCP BARREL IN 2' WIDE STRIPS CENTERED ON JOINT.
4. PLACE CONCRETE FOR CRADLE FOR EACH SECTION FROM ONE SIDE OF THE TRENCH. ALLOW CONCRETE TO FILL ENTIRE AREA UNDER PIPE AND PIPE HAUNCHES AS TO LEAVE NO VOIDS UNDER THE PIPE BEFORE PLACING CONCRETE ON THE OPPOSITE SIDE OF THE TRENCH. PLACE ENTIRE CRADLE AS ONE LIFT (VERTICALLY) PER DRAWINGS.
5. ALLOW CRADLE TO CURE FOR A MINIMUM OF 7 DAYS BEFORE ANY VIBRATING COMPACTION EQUIPMENT IS USED IN THE VICINITY OF THE BARREL PIPE.
6. TRENCH TO BE BACKFILLED IN 5" LIFTS WHEN COMPACTION IS BY HAND. BACKFILL IS IN 8" LIFTS WHEN CONDUCTED BY MACHINE. MINIMUM OF 2 FEET COVER MUST BE PRESENT ON 36"ø RCP BEFORE DRIVING OVER WITH HEAVY EQUIPMENT.

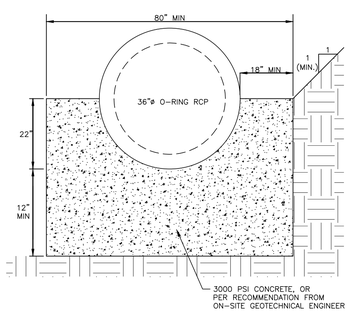

36" CONCRETE CRADLE DETAIL

N.T.S.

NOTES:

1. ALL REINFORCING STEEL IN RISER ANTI-FLOTATION BLOCK TO BE GRADE 60 #6 BARS FOR HORIZONTAL CROSSING AND GRADE 60 #4 BARS FOR VERTICAL CONNECTIONS.
2. INSIDE OF RISER BOTTOM TO BE FORMED WITH NON-SHRINK GROUT TO INVERT ELEVATION OF BARREL.
3. ALL PIPE PENETRATIONS THROUGH THE CONCRETE RISER STRUCTURE SHALL BE MADE WATERTIGHT.

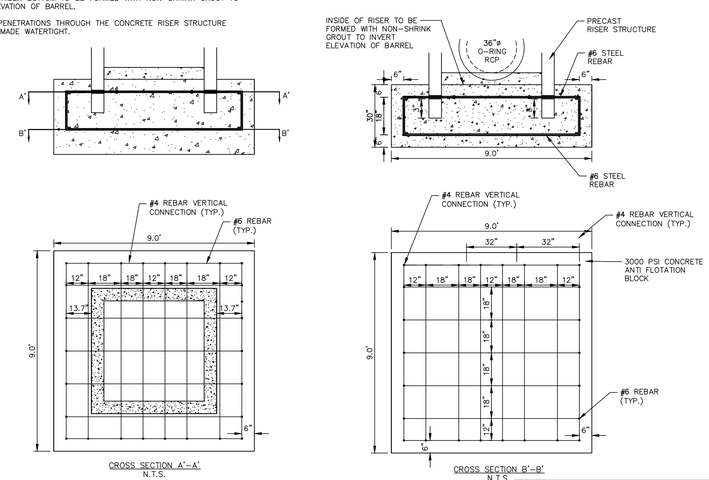

RISER/ANTI-FLOTATION BLOCK CONNECTION

N.T.S.

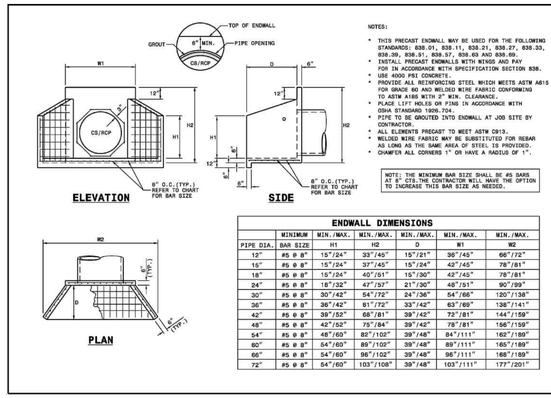

NOTES:

- THIS PRECAST ENDWALL MAY BE USED FOR THE FOLLOWING STANDARDS: 838.01, 838.11, 838.21, 838.27, 838.33, 838.39, 838.51, 838.57, 838.63 AND 838.69.
- INSTALL PRECAST ENDWALLS WITH WINGS AND PAY FOR IN ACCORDANCE WITH SPECIFICATION SECTION 838.
- USE 4000 PSI CONCRETE.
- PROVIDE ALL REINFORCING STEEL WHICH MEETS ASTM A615 FOR GRADE 60 AND WELDED WIRE FABRIC CONFORMING TO ASTM A185 WITH 3" MIN. CLEARANCE.
- PLACE LIFT HOLES OR PINS IN ACCORDANCE WITH OSHA STANDARD 1926.704.
- PIPE TO BE GROUTED INTO ENDWALL AT JOB SITE BY CONTRACTOR.
- ALL ELEMENTS PRECAST TO MEET ASTM C913.
- WELDED WIRE FABRIC MAY BE SUBSTITUTED FOR REBAR AS LONG AS THE SAME AREA OF STEEL IS PROVIDED.
- CHAMFER ALL CORNERS 1" OR HAVE A RADIUS OF 1".

NOTE: THE MINIMUM BAR SIZE SHALL BE #5 BARS AT 8" CTS.THE CONTRACTOR WILL HAVE THE OPTION TO INCREASE THIS BAR SIZE AS NEEDED.

ENDWALL DIMENSIONS

	MINIMUM	MIN./MAX.	MIN./MAX.	MIN./MAX.	MIN./MAX.	MIN./MAX.
PIPE DIA.	BAR SIZE	H1	H2	D	W1	W2
12"	#5 @ 8"	15"/24"	33"/45"	15"/21"	36"/45"	66"/72"
15"	#5 @ 8"	15"/24"	37"/45"	15"/24"	42"/45"	78"/81"
18"	#5 @ 8"	15"/24"	40"/51"	15"/30"	42"/45"	78"/81"
24"	#5 @ 8"	18"/32"	47"/57"	21"/30"	48"/51"	90"/99"
30"	#5 @ 8"	30"/42"	54"/72"	24"/36"	54"/66"	120"/138"
36"	#5 @ 8"	36"/42"	61"/72"	33"/42"	63"/69"	138"/141"
42"	#5 @ 8"	39"/52"	68"/81"	39"/42"	72"/81"	144"/159"
48"	#5 @ 8"	42"/52"	75"/84"	39"/42"	78"/81"	156"/159"
54"	#5 @ 8"	48"/60"	82"/103"	39"/48"	84"/111"	162"/189"
60"	#5 @ 8"	54"/60"	89"/102"	39"/48"	89"/111"	165"/189"
66"	#5 @ 8"	54"/60"	96"/102"	39"/48"	96"/111"	168"/189"
72"	#5 @ 8"	54"/60"	103"/108"	39"/48"	103"/111"	177"/201"

STATE OF NORTH CAROLINA DEPT. OF TRANSPORTATION DIVISION OF HIGHWAYS RALEIGH, N.C.

I-24

ROADWAY STANDARD DRAWING FOR
PRECAST CONCRETE ENDWALL
FOR SINGLE 12" THRU 72" PIPE - 90° SKEW

SHEET 1 OF 1
838.80

NOTES:
INSTALL ALL STEPS PROTRUDING 4" FROM INSIDE FACE OF STRUCTURE WALL.
STEPS DIFFERING IN DIMENSIONS, CONFIGURATION, OR MATERIALS FROM THOSE SHOWN MAY ALSO BE USED PROVIDED THE CONTRACTOR HAS FURNISHED THE ENGINEER WITH DETAILS OF THE PROPOSED STEPS AND HAS RECEIVED WRITTEN APPROVAL FROM THE ENGINEER FOR THE USE OF SUCH STEPS.

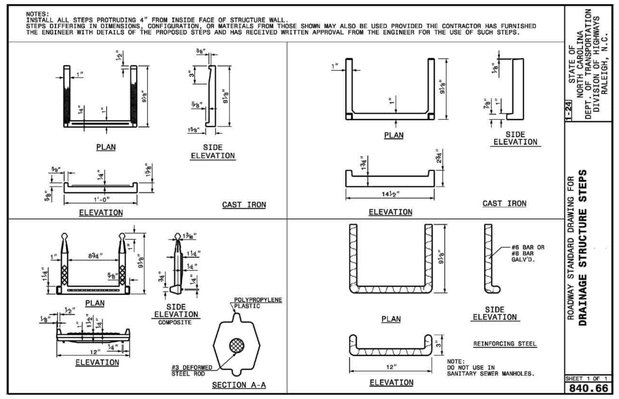

STATE OF NORTH CAROLINA DEPT. OF TRANSPORTATION DIVISION OF HIGHWAYS RALEIGH, N.C.

I-24

ROADWAY STANDARD DRAWING FOR
DRAINAGE STRUCTURE STEPS

SHEET 1 OF 1
840.66

McADAMS
The John R. McAdams Company, Inc.
621 Hillsborough Street
Suite 500
Raleigh, NC 27603
phone 919. 361. 5000
fax 919. 361. 2269
license number: C-0293, C-187
www.mcadamsco.com

WALLBROOK LANDCO, LLC
3 KEEL STREET, SUITE 2
WRIGHTSVILLE BEACH, NORTH CAROLINA
28480-1709

WALLBROOK
CONSTRUCTION DRAWINGS
ROLESVILLE, NORTH CAROLINA

NORTH CAROLINA PROFESSIONAL SEAL 043300 ENGINEER DANIEL C. WIEBKE
2024.06.30 15:16:43 -04'00'

REVISIONS

NO.	DATE	
1	09. 27. 2023	WALL CREEK DRIVE TIE-IN REVISIONS
2	11. 02. 2023	EW-400 REVISION
3	05. 10. 2024	UPDATING SCM B GRADING AND SCM A OUTLET
4	06. 06. 2024	SEWER MANHOLE REVISIONS
5	08. 30. 2024	UPDATED BUILDING FOOTPRINTS AND IMPERVIOUS AREA

PLAN INFORMATION

PROJECT NO.	CPR-19100
FILENAME	CPR-19100-SWB
CHECKED BY	DCW
DRAWN BY	TKD
SCALE	N.T.S
DATE	05. 22. 2023

SHEET

STORMWATER CONTROL MEASURE "B" DETAILS

C9.B3

FINAL DRAWING - RELEASED FOR CONSTRUCTION

X:\Projects\CPR\CPR-19100\04-Production\Water Resources\Construction Drawings\Current Drawings\SCM CD\CPR-19100-SWB.dwg, 8/29/2024 1:06:51 PM, Tommy Dabolt

STORMWATER CONTROL MEASURE 'B' LANDSCAPE SPECIFICATIONS

LEGEND

QTY.	SYM.	SCIENTIFIC NAME	COMMON NAME	HATCH	TYPE	SPACING
SHALLOW WATER						
103	IV	IRIS VIRGINIANA	BLUE FLAG IRIS		4-INCH CONTAINER	24" O.C.
171	PC	PONTEDERIA CORDATA	PICKEREL WEED		4-INCH CONTAINER	24" O.C.
277	ST	SCHOENOPLECTUS TABERNAEMONTANI	SOFT-STEM BULRUSH		4-INCH CONTAINER	24" O.C.
SHALLOW LAND						
138	CS	CAREX SPP.	SEDGES		4-INCH CONTAINER	24" O.C.
118	CA	CRINUM AMERICANUM	AMERICAN CRINUM LILY		4-INCH CONTAINER	24" O.C.
113	HA	HIBISCUS ACULEATUS	PINELANDS MALLOW		4-INCH CONTAINER	24" O.C.

SEEDBED PREPARATION

1. CHISEL COMPACTED AREAS AND SPREAD TOPSOIL 3-4 INCHES DEEP OVER ADVERSE SOIL CONDITIONS. TOPSOIL SHOULD BE INCORPORATED INTO THE FINAL GRADING OF THE BASIN SIDE SLOPES AND AQUATIC SHELF. CONTRACTOR SHOULD SCARIFY THE TOP 3-4 INCHES OF THE COMPACTED FILL TO PROMOTE BONDING WITH TOPSOIL.
2. RIP THE ENTIRE AREA TO 6 INCHES DEPTH.
3. REMOVE ALL LOOSE ROCK, ROOTS, AND OTHER OBSTRUCTIONS LEAVING SURFACE REASONABLY SMOOTH AND UNIFORM.
4. PER ONE TIME ONLY, APPLY AGRICULTURAL LIME, FERTILIZER, AND SUPERPHOSPHATE UNIFORMLY AND MIX WITH SOIL.
5. CONTINUE TILLAGE UNTIL A WELL-PULVERIZED, FIRM REASONABLY UNIFORM SEEDBED IS PREPARED 4 TO 6 INCHES DEEP.
6. SEED ON A FRESHLY PREPARED SEEDBED AND COVER.
7. MULCH IMMEDIATELY AFTER SEEDING AND ANCHOR MULCH.
8. INSPECT ALL SEEDED AREAS AND MAKE NECESSARY REPAIRS OR RESEEDINGS WITHIN THE PLANTING SEASON, IF POSSIBLE. AFTER PERMANENT COVER IS ESTABLISHED.
9. CONSULT CONSERVATION INSPECTOR ON MAINTENANCE TREATMENT.

TEMPORARY SEEDING SCHEDULE

SEEDING DATE	SEEDING MIXTURE	APPLICATION RATE
JAN 1 - MAY 1	RYE (GRAIN)	120 LBS/AC
	KOBE LESPEDEZA	50 LBS/AC
MAY 1 - AUG 15	GERMAN MILLET	40 LBS/AC
AUG 15 - DEC 30	RYE (GRAIN)	120 LBS/AC

SOIL AMENDMENTS
FOLLOW RECOMMENDATIONS OF SOIL TESTS OR APPLY 2,000 LB/AC GROUND AGRICULTURE LIMESTONE AND 750 LB/AC 10-10-10 FERTILIZER (FROM AUG 15 - DEC 30, INCREASE 10-10-10 FERTILIZER TO 1000 LB/AC).

MULCH
APPLY 4000 LB/AC STRAW. ANCHOR STRAW BY TACKING WITH ASPHALT, NETTING, OR A MULCH ANCHORING TOOL. A DISK WITH BLADES SET NEARLY STRAIGHT CAN BE USED AS A MULCH ANCHORING TOOL.

MAINTENANCE
JAN 1 - AUG 15: REFERTILIZE IF GROWTH IS NOT FULLY ADEQUATE. RESEED, REFERTILIZE, AND MULCH IMMEDIATELY FOLLOWING EROSION OR OTHER DAMAGE.

AUG 15 - DEC 30: REPAIR AND REFERTILIZE DAMAGED AREAS IMMEDIATELY. TOP DRESS WITH 50 LB/AC OF NITROGEN IN MARCH. IF IT IS NECESSARY TO EXTEND TEMPORARY COVER BEYOND JUNE 15, OVERSEED WITH 50 LB/AC KOBE LESPEDEZA IN LATE FEBRUARY OR EARLY MARCH.

NOTE: USE THE TEMPORARY SEEDING SCHEDULE ONLY WHEN DATE IS NOT CORRECT TO USE THE PERMANENT SEEDING SCHEDULE.

PERMANENT SEEDING SCHEDULE (DAM EMBANKMENTS)

SEEDING DATE	SEEDING MIXTURE OPTIONS (CHOOSE ONE)	APPLICATION RATE
MAY 1 - AUG 31	CENTIPEDE RAW	30 LBS/AC
APRIL 1 - SEPT 1	SUMMER MIX (80% HULLED BERMUDA/20% MILLET)	200 LBS/AC
OCT 1 - MARCH 1	FALL MIX (80% TALL FESCUE/20% ANNUAL RYEGRASS)	200 LBS/AC

SOIL AMENDMENTS
FOLLOW RECOMMENDATIONS OF SOIL TESTS OR APPLY 4,000 LB/AC GROUND AGRICULTURE LIMESTONE AND 1000 LB/AC 10-10-10 FERTILIZER.

MULCH
APPLY 4000 LB/AC STRAW. ANCHOR STRAW BY TACKING WITH ASPHALT, NETTING, OR A MULCH ANCHORING TOOL. A DISK WITH BLADES SET NEARLY STRAIGHT CAN BE USED AS A MULCH ANCHORING TOOL.

MAINTENANCE
INSPECT AND REPAIR MULCH FREQUENTLY. REFERTILIZE IN LATE WINTER OF THE FOLLOWING YEAR; USE SOIL TESTS OR APPLY 150 LB/AC 10-10-10 FERTILIZER. MOW REGULARLY TO A HEIGHT OF 2-4 INCHES.

NOTE: PERMANENT SEEDING SCHEDULE IS FOR SLOPES OF THE BASIN AND TOP OF BERM.

PLANTING INSTRUCTIONS

PLANTING TECHNIQUES
A. ENSURE THAT ROOTS, ONCE REMOVED FROM POT, ARE STRAIGHTENED AND FACE DOWNWARD.
B. CREATE PLANTING AREA FOR EACH PLANT AND EXCAVATE PIT.
C. PLACE PLANTS IN PIT ENSURING ROOTS ARE FACING COMPLETELY DOWNWARD.
D. HEEL IN SOIL AROUND PLANT AND PROCEED TO NEXT PLANTING LOCATION.
E. NEWLY PLANTED PLANTS NEED TO BE FASTENED TO THE SUBSTRATE FOR THE ESTABLISHMENT OF NEW ROOTS.
F. ROOTS SHALL BE SPREAD IN THEIR NORMAL POSITION. ALL BROKEN OR FRAYED ROOTS SHALL BE CUT OFF CLEANLY.
G. THE DIAMETER OF THE PITS FOR ALL VEGETATIVE STOCK SHALL BE AT LEAST THREE TIMES THE DIAMETER OF THE ROOT MASS. PLANT PIT WALL SHALL BE SCARIFIED PRIOR TO PLANT INSTALLATION.
H. SET THE PLANTS UPRIGHT, IN THE CENTER OF THE PIT. THE BOTTOM OF THE ROOT MASS SHOULD BE RESTING ON UNDISTURBED SOIL.
I. PLACE THE BACKFILL AROUND THE BASE AND SIDES OF THE ROOT MASS, AND WORK EACH LAYER TO SETTLE BACKFILL AND TO ELIMINATE VOIDS AND AIR POCKETS. WHEN PIT IS APPROXIMATELY 2/3 FULL, WATER THOROUGHLY BEFORE PLACING REMAINDER OF THE BACKFILL. WATER AGAIN AFTER PLACING FINAL LAYER OF BACKFILL.
J. BROKEN OR DAMAGED PARTS WILL BE CUT BACK TO UNDAMAGED TISSUE, LEAVING AS MUCH GREEN BASAL TISSUE AS POSSIBLE ABOVE THE ROOTS. IF MORE THAN FIFTY PERCENT (50%) OF THE PLANT IS DAMAGED THEN CONTRACTOR SHALL REPLACE THE PLANT.

CONTAINER STOCK / BARE ROOT
A. STOCK SHALL HAVE BEEN GROWN IN A CONTAINER LONG ENOUGH FOR THE ROOT SYSTEM TO HAVE DEVELOPED SUFFICIENTLY TO HOLD ITS SOIL TOGETHER ONCE REMOVED FROM THE CONTAINER.
B. CONTAINER PLANTS WILL NEED TO BE WATERED REGULARLY AND PLACED IN SHADY CONDITIONS UNTIL PLANTING OCCURS.
C. BARE ROOT PLANTS ARE FOR IMMEDIATE PLANTING, OTHERWISE SEE D) BELOW.
D. IF BARE ROOTS SPECIMENS ARE NOT TO BE PLANTED WITHIN FOUR (4) DAYS, TEMPORARY HOLDING OF BARE ROOT SPECIMENS ARE TO BE COVERED ENTIRELY BY A SUITABLE MEDIUM (ETC. SOIL, SAWDUST, MULCH OR THE LIKE) AND WATERED REGULARLY SO AS TO NOT DRY OUT.

PLANT LOCATIONS
A. NEW PLANTINGS SHALL BE LOCATED WHERE SHOWN ON PLAN EXCEPT WHERE CHANGES HAVE BEEN MADE IN PROPOSED CONSTRUCTION.
B. NECESSARY ADJUSTMENTS SHALL BE MADE ONLY AFTER APPROVAL BY THE OWNER OR THE OWNER'S REPRESENTATIVE.

WATER
WATER SHALL BE POTABLE AND SHALL NOT CONTAIN ELEMENTS TOXIC TO PLANT LIFE.

PLANTING SCHEDULE

1. ONCE THE GRADING IS COMPLETE, THE CONTRACTOR SHALL REQUEST AN ON-SITE INSPECTION AND AN AS-BUILT SURVEY PRIOR TO INSTALLATION OF THE STORMWATER MANAGEMENT FACILITY PLANTS. IF THE CONTRACTOR PLANTS THE PROPOSED VEGETATION PRIOR TO AN AS-BUILT SURVEY (AND SUBSEQUENT APPROVAL), ANY CHANGES TO THE GRADING / RE-PLANTING OF PLANTS WILL BE AT THE CONTRACTOR'S EXPENSE.
2. ONCE THE ENGINEER HAS APPROVED THE AS-BUILT GRADING, THE CONTRACTOR SHALL PLANT THE PROPOSED STORMWATER MANAGEMENT FACILITY PLANTS SHOWN ON THE LANDSCAPE PLAN FOR THE FACILITY. AFTER COMPLETION OF THE PLANTING, THE LANDSCAPE CONTRACTOR SHALL PROVIDE A LETTER TO THE ENGINEER CERTIFYING THAT THE PLANTS HAVE BEEN INSTALLED PER THE APPROVED STORMWATER MANAGEMENT FACILITY PLANTING PLAN.
3. OPTIMAL PLANTING PERIODS RANGE APPROXIMATELY FROM APRIL 15TH THRU JUNE 30TH AND SEPTEMBER 1ST THRU OCTOBER 31ST. FOR FINAL DETERMINATION OF THE SITE'S PLANTING PERIOD, THE CONTRACTOR SHALL COORDINATE WITH A LANDSCAPE PROFESSIONAL REGARDING SCHEDULING FOR PLANT INSTALLATION.
4. IT IS RECOMMENDED THAT THE CONTRACTOR TAKE MEASURES TO PREVENT WILDLIFE FROM DAMAGING OR CONSUMING WETLAND PLANTINGS.

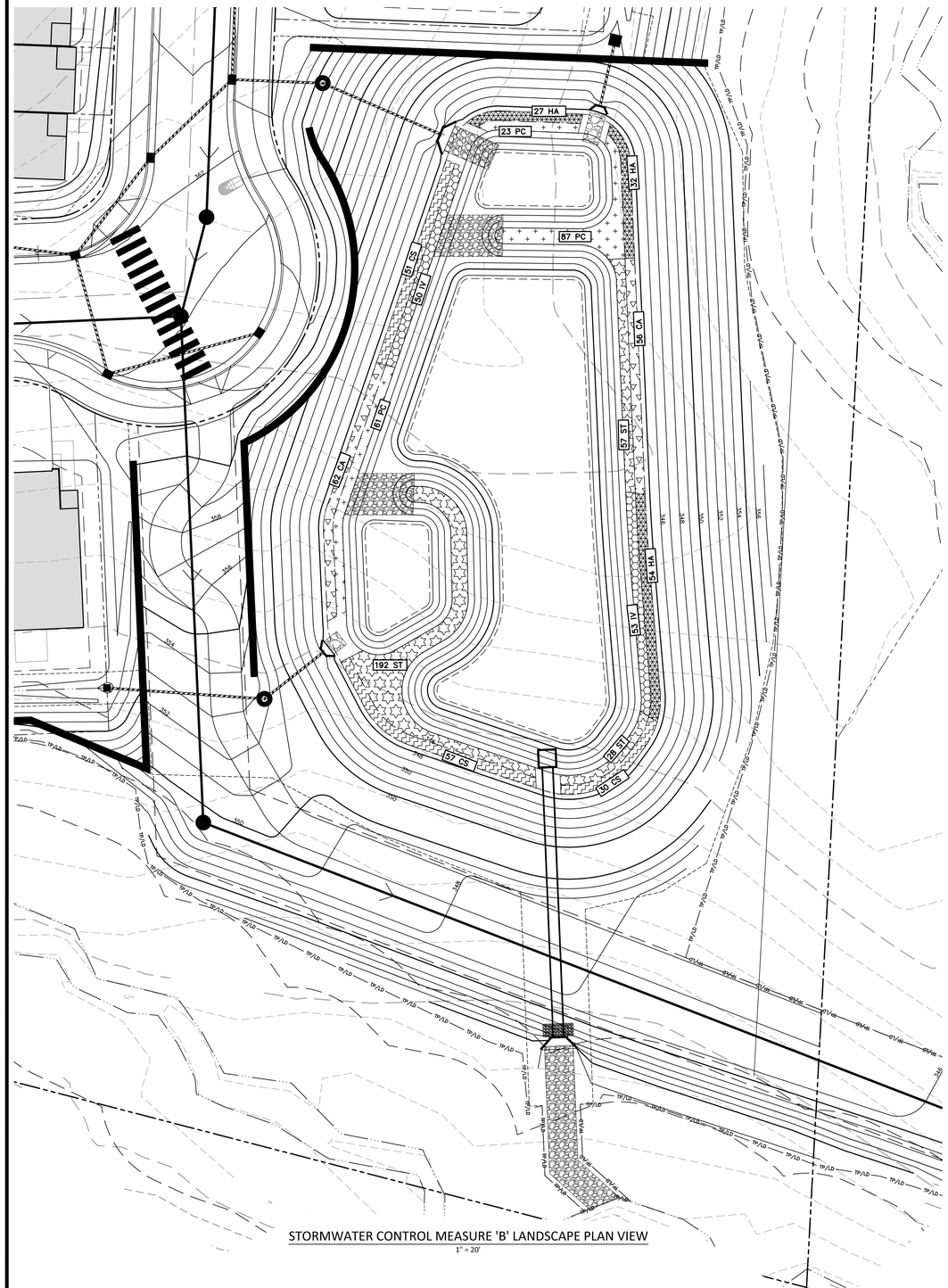

STORMWATER CONTROL MEASURE 'B' LANDSCAPE PLAN VIEW
1" = 20'

FINAL DRAWING - RELEASED FOR CONSTRUCTION

McADAMS
The John R. McAdams Company, Inc.
621 Hillsborough Street
Suite 500
Raleigh, NC 27603
phone 919. 361. 5000
fax 919. 361. 2269
license number: C-0293, C-187
www.mcadamsco.com

WALLBROOK LANDCO, LLC
3 KEEL STREET, SUITE 2
WRIGHTSVILLE BEACH, NORTH CAROLINA
28480-1709

WALLBROOK
CONSTRUCTION DRAWINGS
ROLESVILLE, NORTH CAROLINA

NORTH CAROLINA PROFESSIONAL SEAL 043326 ENGINEER DANIEL C. WIEBKE
2024.08.30 16:43:42 -05'00'

REVISIONS

NO.	DATE	
1	09. 27. 2023	WALL CREEK DRIVE TIE-IN REVISIONS
2	11. 02. 2023	EW-400 REVISION
3	05. 10. 2024	UPDATING SCM B GRADING AND SCM A OUTLET
4	06. 06. 2024	SEWER MANHOLE REVISIONS
5	08. 30. 2024	UPDATED BUILDING FOOTPRINTS AND IMPERVIOUS AREA

PLAN INFORMATION

PROJECT NO.	CPR-19100
FILENAME	CPR-19100-SWB
CHECKED BY	DCW
DRAWN BY	TKD
SCALE	1"=20'
DATE	05. 22. 2023

SHEET

STORMWATER CONTROL MEASURE "B" LANDSCAPE PLAN

C9.B4

X:\Projects\CPR\CPR-19100\04-Production\Water Resources\Construction Drawings\Current Drawings\SCM CDs\CPR-19100-SWB.dwg, 8/29/2024 1:06:37 PM, Tommy Diboll

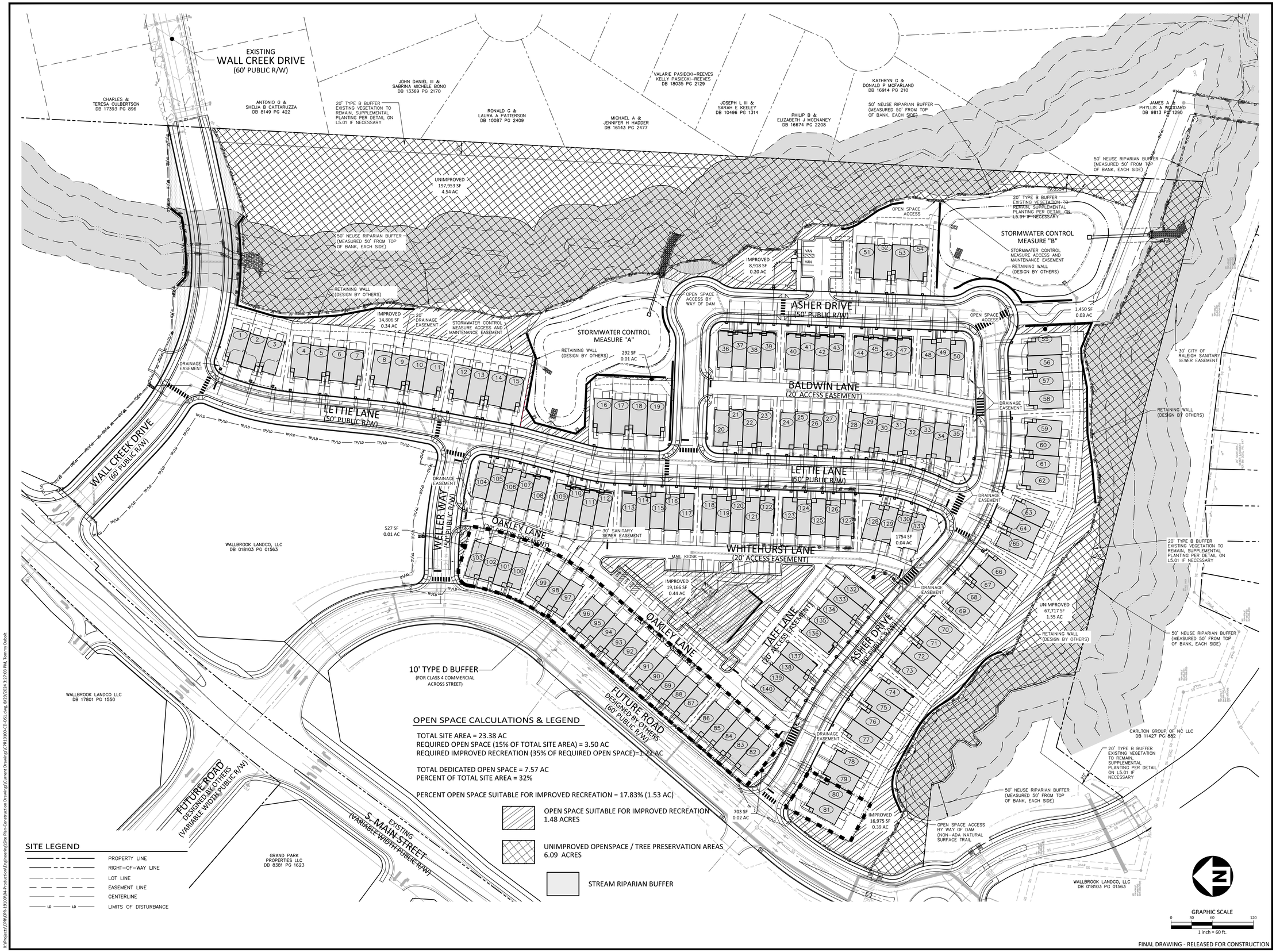

OPEN SPACE CALCULATIONS & LEGEND

TOTAL SITE AREA = 23.38 AC
REQUIRED OPEN SPACE (15% OF TOTAL SITE AREA) = 3.50 AC
REQUIRED IMPROVED RECREATION (35% OF REQUIRED OPEN SPACE)= 1.22 AC

TOTAL DEDICATED OPEN SPACE = 7.57 AC
PERCENT OF TOTAL SITE AREA = 32%

PERCENT OPEN SPACE SUITABLE FOR IMPROVED RECREATION = 17.83% (1.53 AC)

OPEN SPACE SUITABLE FOR IMPROVED RECREATION
1.48 ACRES

UNIMPROVED OPENSPACE / TREE PRESERVATION AREAS
6.09 ACRES

STREAM RIPARIAN BUFFER

SITE LEGEND

PROPERTY LINE
RIGHT-OF-WAY LINE
LOT LINE
EASEMENT LINE
CENTERLINE
LD LD LIMITS OF DISTURBANCE

FINAL DRAWING - RELEASED FOR CONSTRUCTION

McADAMS
The John R. McAdams Company, Inc.
621 Hillsborough Street
Suite 500
Raleigh, NC 27603
phone 919. 361. 5000
fax 919. 361. 2269
license number: C-0293, C-187
www.mcadamsco.com

WALLBROOK LANDCO, LLC
3 KEEL STREET, SUITE 2
WRIGHTSVILLE BEACH, NORTH CAROLINA
28480-1709

WALLBROOK
CONSTRUCTION DRAWINGS
ROLESVILLE, NORTH CAROLINA

NORTH CAROLINA PROFESSIONAL LANDSCAPE ARCHITECT SEAL 1977 JOHN R. RITCHIE III REGISTERED PROFESSIONAL LANDSCAPE ARCHITECT 2024.04.29 14:27:21 -04'00' RITCHIE

REVISIONS

NO.	DATE	
1	09. 27. 2023	WALL CREEK DRIVE TIE-IN REVISIONS
2	11. 02. 2023	EW-400 REVISION
3	05. 10. 2024	UPDATING SCM B GRADING AND SCM A OUTLET
4	06. 06. 2024	SEWER MANHOLE REVISIONS
5	08. 30. 2024	UPDATED BUILDING FOOTPRINTS AND IMPERVIOUS AREA

PLAN INFORMATION

PROJECT NO.	CPR-19100
FILENAME	CPR19100-OS1
CHECKED BY	SRD
DRAWN BY	JAR
SCALE	1"=60'
DATE	05. 22. 2023

SHEET

OPEN SPACE PLAN

C10.01

X:\Projects\CPR\CPR-19100\04-Production\Engineering\Site Plan-Construction Drawings\Current Drawings\CPR19100-CD-OS1.dwg, 8/29/2024 3:27:03 PM, Tommy Dabolt

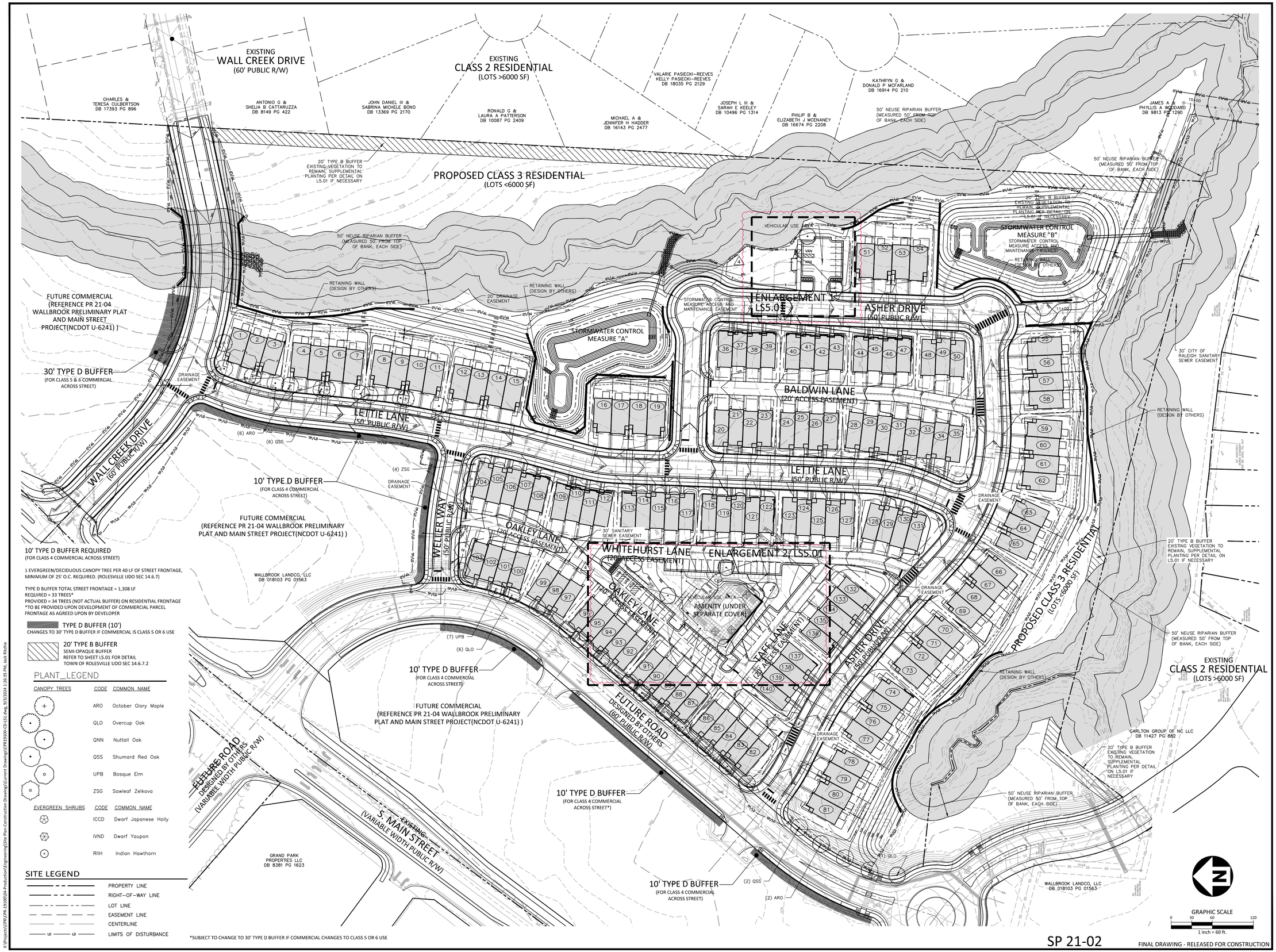

10' TYPE D BUFFER REQUIRED
(FOR CLASS 4 COMMERCIAL ACROSS STREET)

1 EVERGREEN/DECIDUOUS CANOPY TREE PER 40 LF OF STREET FRONTAGE, MINIMUM OF 25' O.C. REQUIRED. (ROLESVILLE UDO SEC 14.6.7)

TYPE D BUFFER TOTAL STREET FRONTAGE = 1,308 LF
REQUIRED = 33 TREES*
PROVIDED = 34 TREES (NOT ACTUAL BUFFER) ON RESIDENTIAL FRONTAGE
*TO BE PROVIDED UPON DEVELOPMENT OF COMMERCIAL PARCEL
FRONTAGE AS AGREED UPON BY DEVELOPER

TYPE D BUFFER (10')
CHANGES TO 30' TYPE D BUFFER IF COMMERCIAL IS CLASS 5 OR 6 USE

20' TYPE B BUFFER
SEMI-OPAQUE BUFFER
REFER TO SHEET L5.01 FOR DETAIL
TOWN OF ROLESVILLE UDO SEC 14.6.7.2

PLANT_LEGEND

CANOPY TREES	CODE	COMMON NAME
	ARO	October Glory Maple
	QLO	Overcup Oak
	QNN	Nuttall Oak
	QSS	Shumard Red Oak
	UPB	Bosque Elm
	ZSG	Sawleaf Zelkova

EVERGREEN SHRUBS	CODE	COMMON NAME
	ICCD	Dwarf Japanese Holly
	IVND	Dwarf Youpon
	RIIH	Indian Hawthorn

SITE LEGEND

- PROPERTY LINE
- RIGHT-OF-WAY LINE
- LOT LINE
- EASEMENT LINE
- CENTERLINE
- LIMITS OF DISTURBANCE

*SUBJECT TO CHANGE TO 30' TYPE D BUFFER IF COMMERCIAL CHANGES TO CLASS 5 OR 6 USE

SP 21-02

FINAL DRAWING - RELEASED FOR CONSTRUCTION

MCADAMS
The John R. McAdams Company, Inc.
621 Hillsborough Street
Suite 500
Raleigh, NC 27603
phone 919. 361. 5000
fax 919. 361. 2269
license number: C-0293, C-187
www.mcadamsco.com

WALLBROOK LANDCO, LLC
3 KEEL STREET, SUITE 2
WRIGHTSVILLE BEACH, NORTH CAROLINA
28480-1709

WALLBROOK
CONSTRUCTION DRAWINGS
ROLESVILLE, NORTH CAROLINA

NORTH CAROLINA PROFESSIONAL LANDSCAPE ARCHITECT LICENSE
JOHN A. RITCHIE III
1977
REGISTERED
09.27.23
RITCHIE

REVISIONS

NO.	DATE	
1	09. 27. 2023	WALL CREEK DRIVE TIE-IN REVISIONS
2	11. 02. 2023	EW-400 REVISION
3	05. 10. 2024	UPDATING SCM B GRADING AND SCM A OUTLET
4	06. 06. 2024	SEWER MANHOLE REVISIONS
5	08. 30. 2024	UPDATED BUILDING FOOTPRINTS AND IMPERVIOUS AREA

PLAN INFORMATION

PROJECT NO.	CPR-19100
FILENAME	CPR19100-LS1
CHECKED BY	SRD
DRAWN BY	JAR
SCALE	1"=60'
DATE	05. 22. 2023

SHEET

OVERALL CODE LANDSCAPE PLAN

L5.00

X:\Projects\CPR\CPR-19100\04-Production\Engineering\Site Plan-Construction Drawings\Current Drawings\CPR19100-CD-LS1.dwg, 9/3/2024 1:26:35 PM, Jack Ritchie

X:\Projects\CPR\CPR-19100\04-Production\Engineering\Site Plan-Construction Drawings\Current Drawings\CPR19100-CD-LS1.dwg, 9/3/2024 1:28:07 PM, Jack Ritchie

GENERAL LANDSCAPE NOTES:

1. ALL MATERIALS AND METHODS OF CONSTRUCTION SHALL BE IN ACCORDANCE WITH THE TOWN OF ROLESVILLE AND THE STATE OF NORTH CAROLINA STANDARDS AND SPECIFICATIONS.
2. CONTRACTOR IS RESPONSIBLE FOR THE SITE INSPECTION BEFORE LANDSCAPE CONSTRUCTION AND INSTALLATION IN ORDER TO BECOME FAMILIAR WITH THE EXISTING CONDITIONS.
3. LANDSCAPE CONTRACTOR IS RESPONSIBLE FOR LOCATING ALL UNDERGROUND UTILITIES BEFORE BEGINNING DEMOLITION OR INSTALLATION.
4. CONTRACTOR SHALL NOTIFY LANDSCAPE ARCHITECT OF ANY DISCREPANCIES BETWEEN THE NOTES, SPECIFICATIONS, DRAWINGS OR SITE CONDITIONS FOR RESOLUTION PRIOR TO INSTALLATION.
5. ANY DAMAGE TO UTILITIES SHALL BE REPAIRED AT THE CONTRACTOR'S EXPENSE.
6. THIS PLAN IS FOR PLANTING PURPOSES ONLY. FOR INFORMATION REGARDING BUILDINGS, GRADING, WALLS, ETC., REFER TO ARCHITECTURE, SITE AND GRADING PLANS.
7. VERIFICATION OF TOTAL PLANT QUANTITIES AS SHOWN IN THE PLANT SCHEDULE SHALL BE THE RESPONSIBILITY OF THE LANDSCAPE CONTRACTOR. ANY DISCREPANCIES SHALL BE BROUGHT TO THE ATTENTION OF THE LANDSCAPE ARCHITECT.
8. CONTRACTOR TO ENSURE PROPER STABILIZATION AND SEEDING OF THE SITE IN ACCORDANCE WITH APPLICABLE REGULATIONS.
9. LANDSCAPE MATERIAL SHALL BE WELL FORMED, VIGOROUS, GROWING SPECIMENS WITH GROWTH TYPICAL OF VARIETIES SPECIFIED AND SHALL BE FREE FROM DAMAGE, INSECTS AND DISEASES. MATERIAL SHALL EQUAL OR SURPASS #1 QUALITY AS DEFINED IN THE CURRENT ISSUE OF "AMERICAN STANDARD FOR NURSERY STOCK" AS PUBLISHED BY THE AMERICAN NURSERY & LANDSCAPE ASSOCIATION.
10. ALL PLANT MATERIAL IS TO BE CAREFULLY HANDLED BY THE ROOT BALL, NOT THE TRUNK, BRANCHES AND/OR FOLIAGE OF THE PLANT. MISHANDLED PLANT MATERIAL MAY BE REJECTED BY THE LANDSCAPE ARCHITECT.
11. ALL PLANT MATERIAL IS TO BE WELL ROOTED, NOT ROOT BOUND, SUCH THAT THE ROOT BALL REMAINS INTACT THROUGHOUT THE PLANTING PROCESS. DEFICIENT PLANT MATERIAL MAY BE REJECTED BY THE LANDSCAPE ARCHITECT OR OWNER.
12. ALL PLANTS TO BE A MINIMUM OF WHAT IS SPECIFIED IN THE PLANT SCHEDULE. ANY CHANGES OR SUBSTITUTIONS SHALL BE APPROVED BY THE LANDSCAPE ARCHITECT AND GOVERNING JURISDICTION PRIOR TO ANY HOLE BEING DUG.
13. CONTRACTOR TO COORDINATE WITH OWNER'S REPRESENTATIVE AND LANDSCAPE ARCHITECT TO ESTABLISH THE EXTENTS OF MULCH/SEED/SOD IF NOT SPECIFICALLY SHOWN ON PLANS.
14. CONTRACTOR SHALL PROVIDE POSITIVE DRAINAGE IN ALL PLANTING AREAS.
15. PROPOSED TREES TO BE PLANTED A MINIMUM 10 FEET FROM ANY LIGHT POLE AS MEASURED FROM TRUNK OF THE TREE TO THE POLE.
16. PROPOSED TREES TO BE PLANTED A MINIMUM 5 FEET FROM ANY FIRE HYDRANT AS MEASURED FROM TRUNK OF THE TREE TO THE HYDRANT.
17. CONTRACTOR SHALL COMPLETE SOIL TEST IN ALL PLANTING AREAS TO DETERMINE SOIL AMENDMENT REQUIREMENTS UNLESS WAIVED BY OWNER'S REPRESENTATIVE. CONTRACTOR SHALL ADJUST PH AND FERTILITY BASED UPON THE SOIL TEST RESULTS.
18. TOPSOIL SHALL BE FREE OF MATERIAL LARGER THAN 1.0 INCH IN DIAMETER OR LENGTH AND SHALL NOT CONTAIN SLAG, CINDERS, STONES, LUMPS OF SOIL, STICKS, ROOTS, TRASH, OR OTHER EXTRANEOUS MATERIAL.
19. LOOSEN SUBGRADE / SURFACE SOIL TO A MINIMUM DEPTH OF 6 INCHES. APPLY SOIL AMENDMENTS AND FERTILIZERS AS REQUIRED BY THE SOIL TEST RESULTS TO ACHIEVE A HEALTHY GROWING MEDIA AND MIX THOROUGHLY INTO TOP 4 INCHES OF SOIL. SPREAD PLANTING SOIL MIX TO A DEPTH OF 6 INCHES BUT NOT LESS THAN REQUIRED TO MEET FINISH GRADES AFTER NATURAL SETTLEMENT. DO NOT SPREAD IF PLANTING SOIL OR SUBGRADE IS FROZEN, MUDDY, OR EXCESSIVELY WET.
20. IF IMPORTED TOPSOIL IS REQUIRED, THE SUBGRADE SHALL BE SCARIFIED OR TILLED TO A DEPTH OF AT LEAST 6 INCHES PRIOR TO INSTALLATION OF IMPORTED TOPSOIL. FOLLOWING INSTALLATION OF IMPORTED TOPSOIL, THE TOPSOIL SHALL BE TILLED TO INTEGRATE THE SOIL PROFILES.
21. PLANT MATERIALS ARE TO BE GUARANTEED FOR A PERIOD OF 12 MONTHS. PLANT MATERIALS WHICH REMAIN UNHEALTHY WILL BE REPLACED BY THE LANDSCAPE CONTRACTOR BEFORE THE EXPIRATION OF THE GUARANTEE PERIOD OR IMMEDIATELY IF SO DIRECTED BY THE OWNER'S REPRESENTATIVE OR LANDSCAPE ARCHITECT.
22. ALL TREE PLANTINGS SHALL BE MULCHED TO A DEPTH OF 3 INCHES, AND WITH A MINIMUM 3 FOOT RADIUS FROM BASE OF TREE OR TO DRIPLINE. MULCH SHALL BE FREE OF TRASH AND MAINTAINED WEED FREE. MULCH SHALL NOT COVER THE ROOT FLARE. CONFIRM MULCH SPECIFICATIONS WITH OWNER'S REPRESENTATIVE OR LANDSCAPE ARCHITECT.
23. DO NOT PRUNE TREES AND SHRUBS BEFORE DELIVERY. PROTECT BARK, BRANCHES, AND ROOT SYSTEMS FROM SUN SCALD, DRYING, SWEATING, WHIPPING, AND OTHER HANDLING AND TYING DAMAGE. DO NOT BEND OR BIND-TIE TREES OR SHRUBS IN SUCH A MANNER AS TO DESTROY THEIR NATURAL SHAPE. PROVIDE PROTECTIVE COVERING OF EXTERIOR PLANTS DURING DELIVERY. DO NOT DROP EXTERIOR PLANTS DURING DELIVERY AND HANDLING.
24. DELIVER EXTERIOR PLANTS AFTER PREPARATIONS FOR PLANTING HAVE BEEN COMPLETED AND INSTALL IMMEDIATELY. IMMEDIATELY AFTER UNLOADING, STAND THE TREES UP TO REDUCE THE RISK OF SUN SCALD. PROPERLY STAGED TREES ARE STANDING, UNTIED AND SPACED. UNLESS IMMEDIATELY INSTALLED, SET EXTERIOR PLANTS AND TREES IN SHADE, PROTECT FROM WEATHER AND MECHANICAL DAMAGE, AND KEEP ROOTS MOIST.
25. SEE LANDSCAPE DETAILS FOR TREE STAKING REQUIREMENTS.
26. EXCAVATE EDGES OF ALL PLANTING BEDS TO 2 INCH DEPTH TO FORM A NEAT AND CRISP DEFINITION.
27. CONTRACTOR SHALL REMOVE DEBRIS AND FINE GRADE ALL PLANTING AREAS PRIOR TO INSTALLATION.
28. REMOVE GUY WIRES AND STAKES AT END OF WARRANTY PERIOD OR ESTABLISHMENT.
29. FINISH GRADING: GRADE PLANTING AREAS TO A SMOOTH, UNIFORM SURFACE PLANE WITH LOOSE, UNIFORMLY FINE TEXTURE. GRADE TO WITHIN PLUS OR MINUS 1/2 INCH OF FINISH ELEVATION. ROLL AND RAKE, REMOVE RIDGES, AND FILL DEPRESSIONS TO MEET FINISH GRADES. LIMIT FINISHED GRADING TO AREAS THAT CAN BE PLANTED IN THE IMMEDIATE FUTURE.

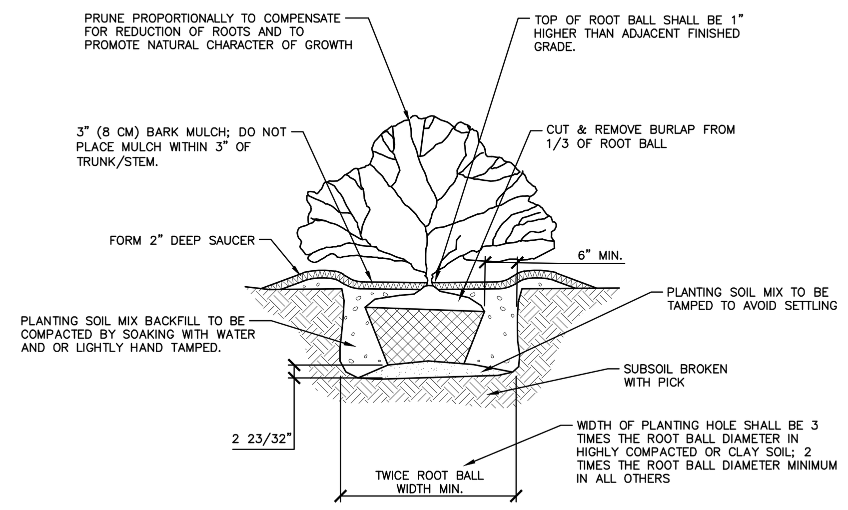

01 SHRUB INSTALLATION
SCALE: 3/8"=1'-0"

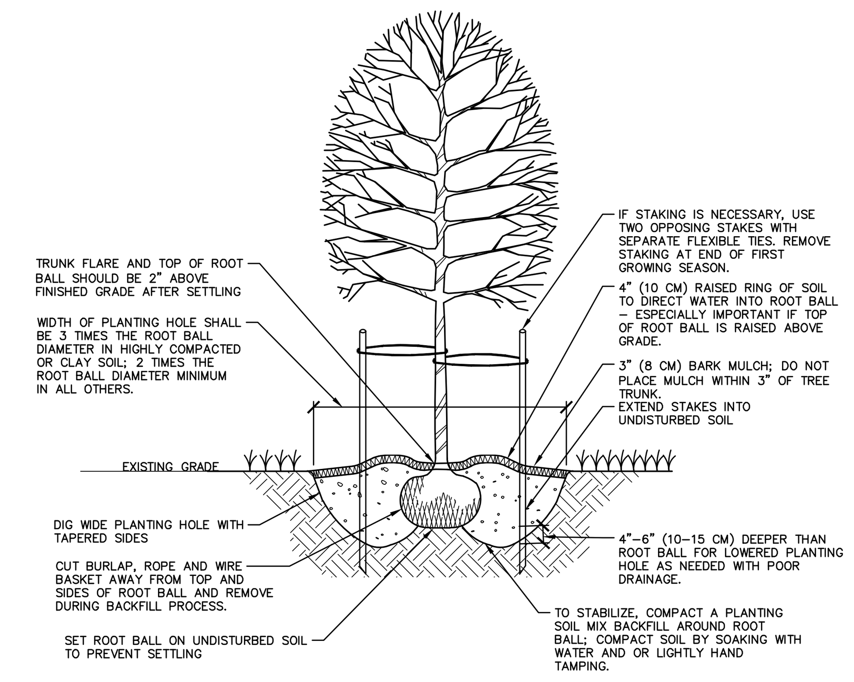

NOTES:
1. SELECT TREES THAT HAVE: STRONG CENTRAL LEADER; CROWN WITH FULL FOLIAGE; ARE GROWN IN HEAVY CLAY SOIL WITH DRIP IRRIGATION.
2. BEFORE INSTALLING PLANTING SOIL MIX BACKFILL AROUND ROOT BALL, BE SURE TO SOAK HOLE TO CONFIRM WATER FILTERS THROUGH UNDISTURBED SOIL. DESIGN ALTERNATIVE DRAINAGE SYSTEM IF REQUIRED.
3. A SOIL EXPERT CAN BE CONSULTED TO HELP MODIFY AND FERTILIZE TOPSOIL TO CREATE AN ACCEPTABLE PLANTING SOIL MIX FOR THE SITE CONDITIONS AND SPECIFIC TREE SPECIES.
4. IF USING CONTAINER GROWN TREES, USE FINGERS OR SMALL HAND TOOLS TO PULL ROOTS OUT OF THE OUTER LAYER OF POTTING SOIL; THEN CUT OR PULL APART ANY ROOTS CIRCLING THE PERIMETER OF THE CONTAINER.
5. THOROUGHLY SOAK THE TREE ROOT BALL AND ADJACENT PREPARED SOIL SEVERAL TIMES DURING THE FIRST MONTH AFTER PLANTING AND DURING DRY PERIODS.

02 TREE INSTALLATION
SCALE: 3/8"=1'-0"

5

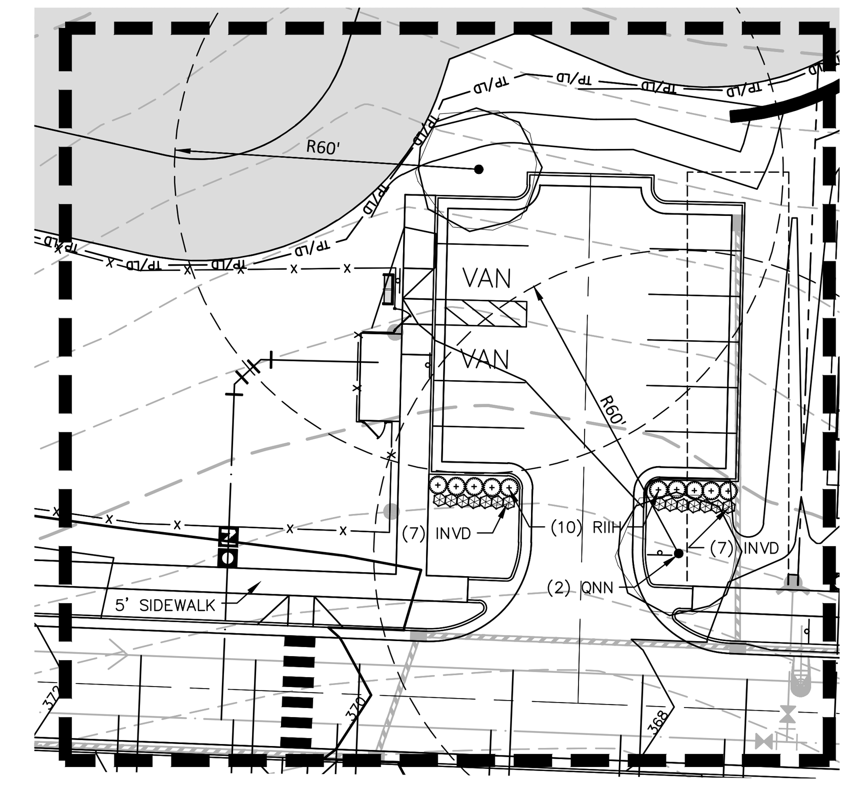

ENLARGEMENT 1
VEHICULAR USE AREA LANDSCAPING
SCALE: 1" = 30'

PLANT SCHEDULE

SYMBOL	CODE	QTY	COMMON NAME	BOTANICAL NAME	CAL	REMARKS
CANOPY TREES (TYPE D BUFFER)						
	ARO	8	October Glory Maple 10' min height	Acer rubrum 'October Glory' TM	2.5"	10' min height
	QLO	7	Overcup Oak 10' min height	Quercus lyrata	2.5"	10' min height
	QNN	7	Nuttall Oak 10' min height	Quercus nuttallii	2.5"	10' min height
	QSS	8	Shumard Red Oak 10' min height	Quercus shumardii	2.5"	10' min height
	UPB	7	Bosque Elm 10' min height	Ulmus parvifolia 'Bosque'	2.5"	10' min height
	ZSG	4	Sawleaf Zelkova 10' min height	Zelkova serrata 'Green Vase'	2.5"	10' min height

SYMBOL	CODE	QTY	COMMON NAME	BOTANICAL NAME	HEIGHT	REMARKS
EVERGREEN SHRUBS (VEHICULAR USE AREA SCREENING)						
	ICCD	8	Dwarf Japanese Holly	Ilex crenata 'Compacta'	24" min	
	IVND	35	Dwarf Yaupon	Ilex vomitoria 'Nana'	24" min	
	RIIH	10	Indian Hawthorn	Rhaphiolepis indica	24" min	

5

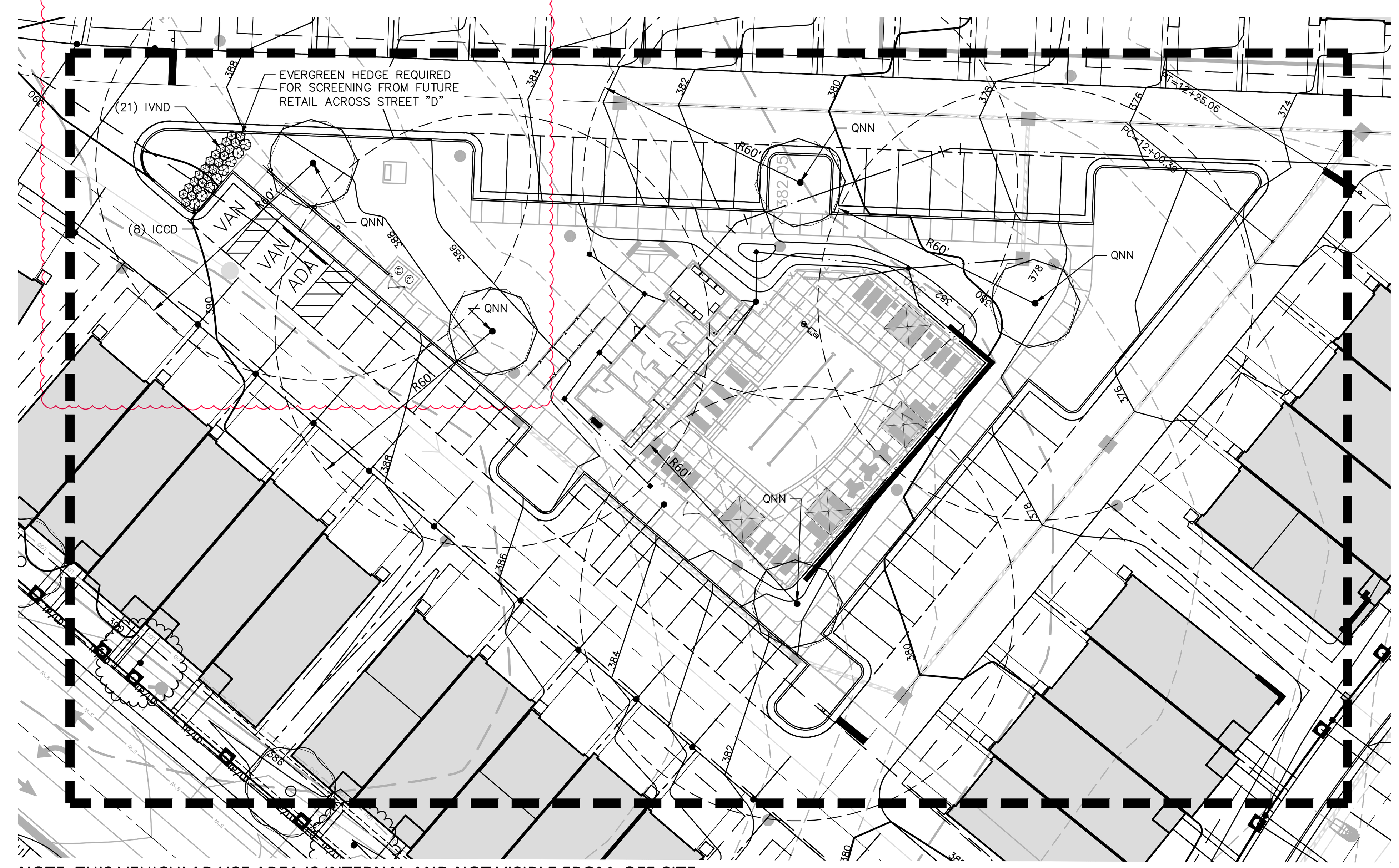

NOTE: THIS VEHICULAR USE AREA IS INTERNAL AND NOT VISIBLE FROM OFF-SITE, THEREFORE NO EVERGREEN HEDGE IS REQUIRED EXCEPT WHERE NOTED.

ENLARGEMENT 2
VEHICULAR USE AREA LANDSCAPING
SCALE: 1" = 30'

BUFFER SUPPLEMENTAL PLANT MATERIAL

LARGE DECIDUOUS TREE
LARGE TREE SPECIES
(INSTALLED AT 2.5" CAL MIN.)

TULIP POPLAR
SWEETGUM 'ROTUNIDLOBA'
OAK – WATER OAK, SWAMP WHITE OAK
SYCAMORE
SOURWOOD
PERSIMMON

LARGE EVERGREEN TREE
LARGE EVERGREEN TREE SPECIES
(INSTALLED AT 12" HT MIN.)

LOBLOLLY PINE
VIRGINIA PINE
CANADIAN HEMLOCK
BLUE ATLAS CEDAR

DECIDUOUS SHRUB
LARGE
(INSTALLED AT 30" HT, 4 GAL MIN.)

AMERICAN BEAUTYBERRY
BOTTLEBRUSH BUCKEYE
FORSYTHIA SPP.
FLORIDA LEUCOUTHOE

EVERGREEN SHRUB
LARGE
(INSTALLED AT 30" HT, 4 GAL MIN.)

CAMELIA SASANQUA
FLORIDA ANISE
LEATHERLEAF VIBURNUM
WAX MYRTLE
YAUPON HOLLY

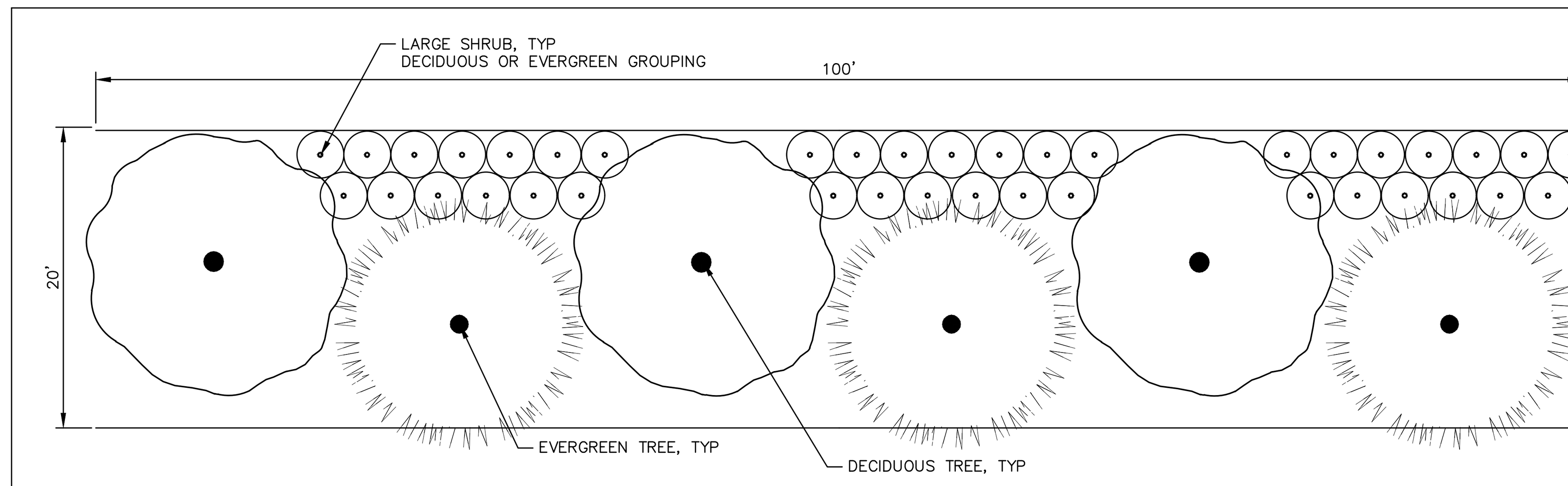

REVEGETATED 20' TYPE B BUFFER – TYPICAL DETAIL
SCALE: 1"=10'

BUFFER NOTES:

NEW PLANTING TO OCCUR ONLY WHERE EXISTING VEGETATION INSUFFICIENT OR NOT AS DENSE AS BUFFER DETAIL.
WHERE EXISTING TREES REMAIN, PLANT TREES BETWEEN THEM ONLY WHEN A SPACE OF 40' MINIMUM EXISTS.
ALTERNATE EXISTING AND DECIDUOUS TREES/SHRUBS WHEN SUPPLEMENTING EXISTING VEGETATION WITHIN BUFFER.

SP 21-02

FINAL DRAWING - RELEASED FOR CONSTRUCTION

McADAMS
The John R. McAdams Company, Inc.
621 Hillsborough Street
Suite 500
Raleigh, NC 27603
phone 919. 361. 5000
fax 919. 361. 2269
license number: C-0293, C-187
www.mcadamsco.com

WALLBROOK LANDCO, LLC
3 KEEL STREET, SUITE 2
WRIGHTSVILLE BEACH, NORTH CAROLINA
28480-1709

WALLBROOK
CONSTRUCTION DRAWINGS
ROLESVILLE, NORTH CAROLINA

John A. Ritchie III
NORTH CAROLINA REGISTERED LANDSCAPE ARCHITECT 1977 JOHN A. RITCHIE III
2024.09.03 13:39:18-04'00'

REVISIONS

NO.	DATE	
1	09. 27. 2023	WALL CREEK DRIVE TIE-IN REVISIONS
2	11. 02. 2023	EW-400 REVISION
3	05. 10. 2024	UPDATING SCM B GRADING AND SCM A OUTLET
4	06. 06. 2024	SEWER MANHOLE REVISIONS
5	08. 30. 2024	UPDATED BUILDING FOOTPRINTS AND IMPERVIOUS AREA

PLAN INFORMATION

PROJECT NO.	CPR-19100
FILENAME	CPR19100-LS1
CHECKED BY	SRD
DRAWN BY	JAR
SCALE	1"=30'
DATE	05. 22. 2023

SHEET

ENLARGED CODE LANDSCAPE PLAN

L5.01

TREE PRESERVATION AREA

Wallbrook	Area (SF)	Acres	
Lot 1 (Publix)	484,860.9	11.13	
Lot 2	57,276.4	1.31	
Lot 3	78,721.7	1.81	
Lot 4	52,181.8	1.20	
Lot 5 (Boat Tract)	220,767.8	5.07	
Lot 6 (Townhomes)	876,206.2	20.11	
Lot 7	119,306.6	2.74	
Lot 8	232,855.7	5.35	
Right-of-Way (Future)	290,799.5	6.68	
WALLBROOK GROSS ACREAGE		55.39	
TREE PRESERVATION AREA	373,027.4	8.56	15.46%
QUALIFYING REPLACEMENT DECIDUOUS			12
QUALIFYING REPLACEMENT EVERGREEN			8

Paris Tract	Area (SF)	Acres	
Lot A	306,780.8	7.04	
PARIS TRACT GROSS ACREAGE		7.04	
TREE PRESERVATION AREA	16,399.5	0.38	5.35%
QUALIFYING REPLACEMENT DECIDUOUS			2
QUALIFYING REPLACEMENT EVERGREEN			0

MBW Tract	Area (SF)	Acres	
Lot B	223,658.5	5.13	
Lot C	60,807.1	1.40	
Lot D	17,893.2	0.41	
MBW GROSS ACREAGE		6.94	
TREE PRESERVATION AREA	0.0	0.00	0.00%
QUALIFYING REPLACEMENT DECIDUOUS			1
QUALIFYING REPLACEMENT EVERGREEN			0

OVERALL TREE PRESERVATION AREA

Wallbrook + Paris + MBW	Area (SF)	Acres	
GROSS ACREAGE		69.37	
TREE PRESERVATION AREA REQUIRED		6.94	10.00%
TREE PRESERVATION AREA PROVIDED	389,426.9	8.94	12.89%
QUALIFYING REPLACEMENT DECIDUOUS			15
QUALIFYING REPLACEMENT EVERGREEN			8

NOTE: ⚠

TREE PROTECTION FENCE TO BE PROVIDED AT ALL TREE PRESERVATION AREAS. REFER TO CD 22-02 FOR LIMITS OF DISTURBANCE AND TREE PROTECTION FENCE LOCATIONS.

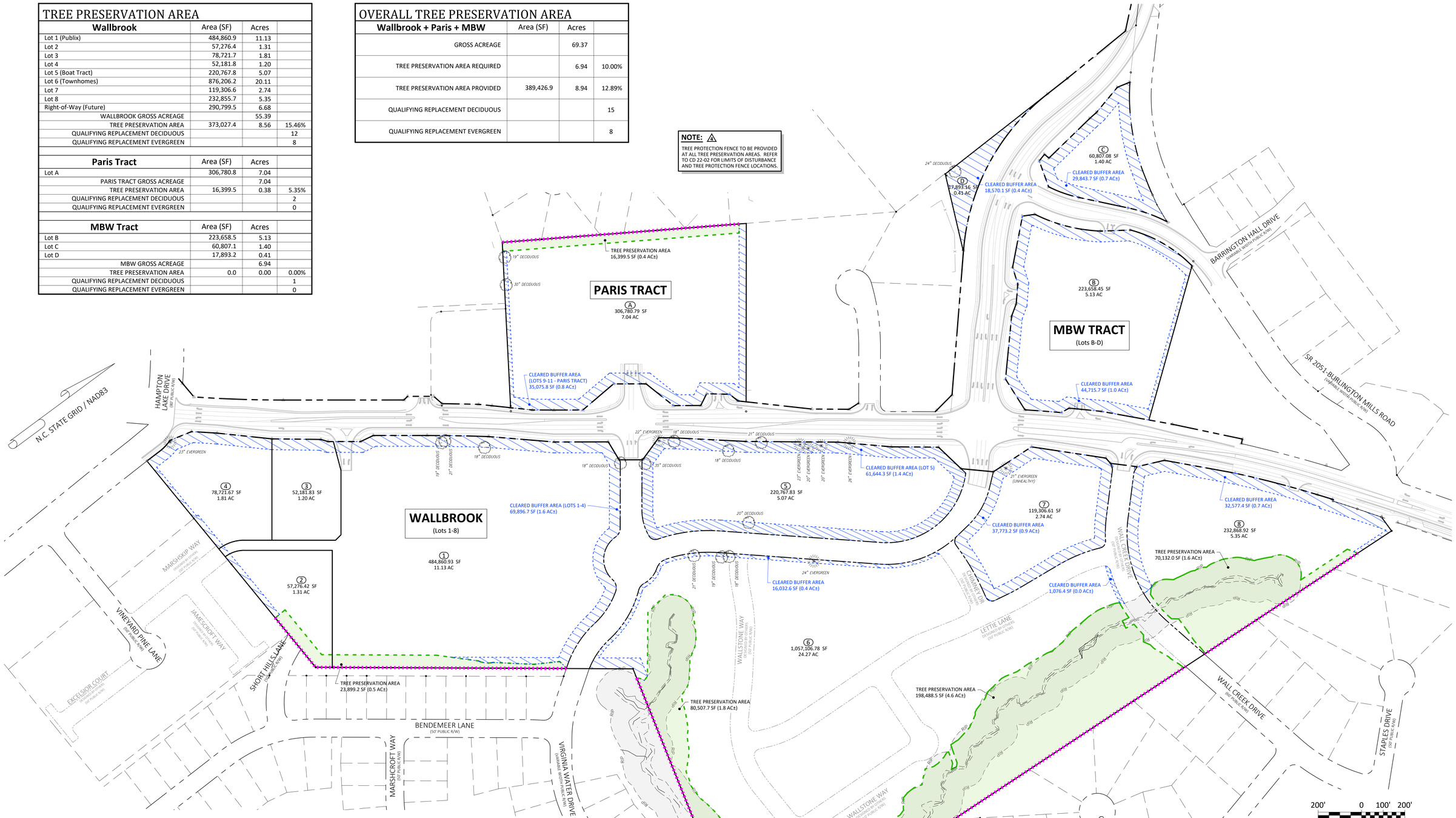

LEGEND

TREE PRESERVATION AREA
- SURVEY WILL BE COMPLETED FOR TREES (6" DBH MIN.) NOTING SIZE, SPECIES AND LOCATION
- SURVEY TO BE INCLUDED WITH SUBSEQUENT CONSTRUCTION DRAWING SUBMITTALS
- PRESERVATION AREA TO BE RECORDED AS PERMANENT EASEMENT ON FINAL PLAT

TREE PRESERVATION AREA AS BUFFER
- GENERAL HEALTH OF BUFFER TO BE ASSESSED BY ARBORIST WITH REPORT AND PHOTOS PROVIDED AT CONSTRUCTION DRAWING SUBMITTAL

TREE REPLACEMENT CALCULATION AREA (BUFFER AREAS TO BE CLEARED)
- REPLACEMENT RATIO = 1:1

DECIDUOUS TREE
- TO QUALIFY FOR REPLACEMENT, TREE MUST BE HEALTHY AND MEASURE AT LEAST 18" DIAMETER AT BREAST HEIGHT (DBH)
- REPLACEMENT = 2" MIN. CALIPER

EVERGREEN TREE
- TO QUALIFY FOR REPLACEMENT, TREE MUST BE HEALTHY AND MEASURE AT LEAST 20" DBH
- REPLACEMENT = 8' MIN. HEIGHT

#	DATE	DESCRIPTION
5	26-MAY-22	REVISED PER COMMENTS
4	25-MAY-22	REVISED PER COMMENTS
3	20-MAY-22	REVISED PER COMMENTS
2	1-APR-22	REVISED PER COMMENTS
1	21-JAN-22	REVISED PER COMMENTS

REVISIONS:

NORTH CAROLINA PROFESSIONAL ENGINEER SEAL 31970 BRIAN C. FAGUNDES

5/26/2022

ACG Dwg No. D-1219-PP

SHEET: 8 of 8 PIN # 1758-45-8905, 1758-56-8976

TREE PRESERVATION PLAN

WALLBROOK

PRELIMINARY PLAT

Town of Rolesville Project Number: PR 21-04
Rolesville, Wake County, North Carolina

DEVELOPER: Crosland Southeast

ADDRESS: 121 West Trade Street, Ste 2550, Charlotte, NC 28202

PHONE: (704) 561-5200

ARK CONSULTING GROUP PLLC
ENGINEERS & PLANNERS
Licensed in Land Surveying
www.arkconsultinggroup.com
2755-B Charles Blvd., Greenville, NC 27858
(252) 558-0888

SURVEY: BY OTHERS (Johnson, Mimiran & Thompson)		APPROVED:	BCF
DRAWN:	DLC	DATE:	10-1-2021
CHECKED:	STA	SCALE:	1" = 200'

B:\DWGROOT (AW)\01 - PROJECTS\ACHE\D0001AAC 3E\D1289 - WALLBROOK SHOP CTR\D - DWG\01 - FINAL\D1219_PP - WALLBROOK.DWG, Trees (8), Lee Christman, Wed, May 25, 2022 9:4:45 PM

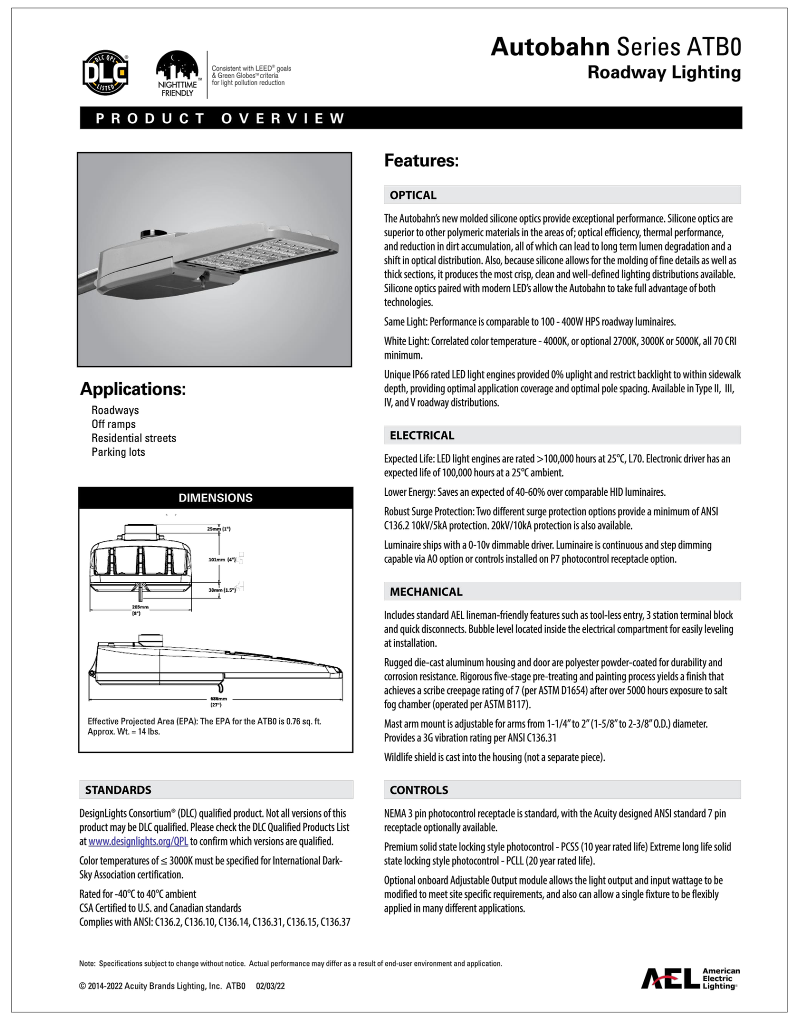

Autobahn Series ATB0
Roadway Lighting

PRODUCT OVERVIEW

Consistent with LEED® goals & Green Globes™ criteria for light pollution reduction

Applications:
- Roadways
- Off ramps
- Residential streets
- Parking lots

DIMENSIONS

Effective Projected Area (EPA): The EPA for the ATB0 is 0.76 sq. ft. Approx. Wt. = 14 lbs.

STANDARDS

DesignLights Consortium® (DLC) qualified product. Not all versions of this product may be DLC qualified. Please check the DLC Qualified Products List at www.designlights.org/QPL to confirm which versions are qualified.

Color temperatures of ≤ 3000K must be specified for International Dark-Sky Association certification.

Rated for -40°C to 40°C ambient
CSA Certified to U.S. and Canadian standards
Complies with ANSI: C136.2, C136.10, C136.14, C136.31, C136.15, C136.37

Features:

OPTICAL

The Autobahn's new molded silicone optics provide exceptional performance. Silicone optics are superior to other polymeric materials in the areas of; optical efficiency, thermal performance, and reduction in dirt accumulation, all of which can lead to long term lumen degradation and a shift in optical distribution. Also, because silicone allows for the molding of fine details as well as thick sections, it produces the most crisp, clean and well-defined lighting distributions available. Silicone optics paired with modern LED's allow the Autobahn to take full advantage of both technologies.

Same Light: Performance is comparable to 100 - 400W HPS roadway luminaires.

White Light: Correlated color temperature - 4000K, or optional 2700K, 3000K or 5000K, all 70 CRI minimum.

Unique IP66 rated LED light engines provided 0% uplight and restrict backlight to within sidewalk depth, providing optimal application coverage and optimal pole spacing. Available in Type II, III, IV, and V roadway distributions.

ELECTRICAL

Expected Life: LED light engines are rated >100,000 hours at 25°C, L70. Electronic driver has an expected life of 100,000 hours at a 25°C ambient.

Lower Energy: Saves an expected of 40-60% over comparable HID luminaires.

Robust Surge Protection: Two different surge protection options provide a minimum of ANSI C136.2 10kV/5kA protection. 20kV/10kA protection is also available.

Luminaire ships with a 0-10v dimmable driver. Luminaire is continuous and step dimming capable via AO option or controls installed on P7 photocontrol receptacle option.

MECHANICAL

Includes standard AEL lineman-friendly features such as tool-less entry, 3 station terminal block and quick disconnects. Bubble level located inside the electrical compartment for easily leveling at installation.

Rugged die-cast aluminum housing and door are polyester powder-coated for durability and corrosion resistance. Rigorous five-stage pre-treating and painting process yields a finish that achieves a scribe creepage rating of 7 (per ASTM D1654) after over 5000 hours exposure to salt fog chamber (operated per ASTM B117).

Mast arm mount is adjustable for arms from 1-1/4" to 2" (1-5/8" to 2-3/8" O.D.) diameter. Provides a 3G vibration rating per ANSI C136.31

Wildlife shield is cast into the housing (not a separate piece).

CONTROLS

NEMA 3 pin photocontrol receptacle is standard, with the Acuity designed ANSI standard 7 pin receptacle optionally available.

Premium solid state locking style photocontrol - PCSS (10 year rated life) Extreme long life solid state locking style photocontrol - PCLL (20 year rated life).

Optional onboard Adjustable Output module allows the light output and input wattage to be modified to meet site specific requirements, and also can allow a single fixture to be flexibly applied in many different applications.

Note: Specifications subject to change without notice. Actual performance may differ as a result of end-user environment and application.

© 2014-2022 Acuity Brands Lighting, Inc. ATB0 02/03/22

AEL American Electric Lighting

2 POLE MOUNT FIXTURE TYPE R1
SPECIFICATION SHEET

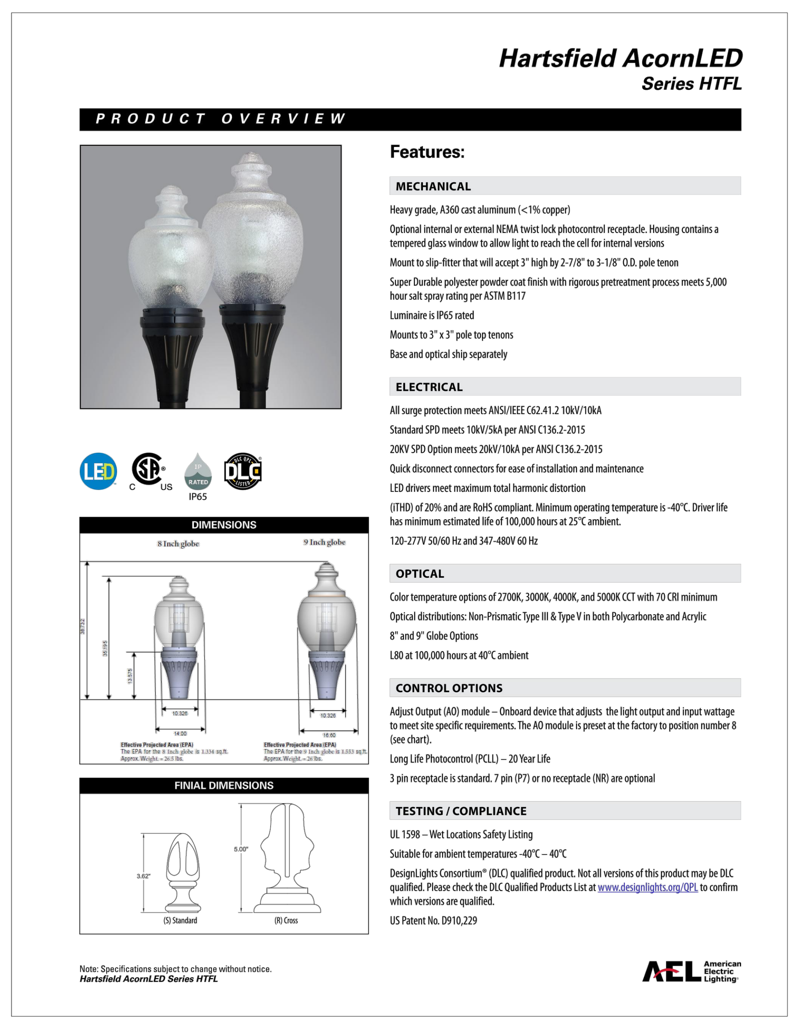

Hartsfield AcornLED
Series HTFL

PRODUCT OVERVIEW

Features:

MECHANICAL

Heavy grade, A360 cast aluminum (<1% copper)

Optional internal or external NEMA twist lock photocontrol receptacle. Housing contains a tempered glass window to allow light to reach the cell for internal versions

Mount to slip-fitter that will accept 3" high by 2-7/8" to 3-1/8" O.D. pole tenon

Super Durable polyester powder coat finish with rigorous pretreatment process meets 5,000 hour salt spray rating per ASTM B117

Luminaire is IP65 rated

Mounts to 3" x 3" pole top tenons

Base and optical ship separately

ELECTRICAL

All surge protection meets ANSI/IEEE C62.41.2 10kV/10kA

Standard SPD meets 10kV/5kA per ANSI C136.2-2015

20KV SPD Option meets 20kV/10kA per ANSI C136.2-2015

Quick disconnect connectors for ease of installation and maintenance

LED drivers meet maximum total harmonic distortion

(iTHD) of 20% and are RoHS compliant. Minimum operating temperature is -40°C. Driver life has minimum estimated life of 100,000 hours at 25°C ambient.

120-277V 50/60 Hz and 347-480V 60 Hz

OPTICAL

Color temperature options of 2700K, 3000K, 4000K, and 5000K CCT with 70 CRI minimum

Optical distributions: Non-Prismatic Type III & Type V in both Polycarbonate and Acrylic

8" and 9" Globe Options

L80 at 100,000 hours at 40°C ambient

CONTROL OPTIONS

Adjust Output (AO) module – Onboard device that adjusts the light output and input wattage to meet site specific requirements. The AO module is preset at the factory to position number 8 (see chart).

Long Life Photocontrol (PCLL) – 20 Year Life

3 pin receptacle is standard. 7 pin (P7) or no receptacle (NR) are optional

TESTING / COMPLIANCE

UL 1598 – Wet Locations Safety Listing

Suitable for ambient temperatures -40°C – 40°C

DesignLights Consortium® (DLC) qualified product. Not all versions of this product may be DLC qualified. Please check the DLC Qualified Products List at www.designlights.org/QPL to confirm which versions are qualified.

US Patent No. D910,229

DIMENSIONS

8 Inch globe | 9 Inch globe

FINIAL DIMENSIONS

(S) Standard | (R) Cross

Note: Specifications subject to change without notice.
Hartsfield AcornLED Series HTFL

AEL American Electric Lighting

3 POLE MOUNT FIXTURE TYPE D1
SPECIFICATION SHEET

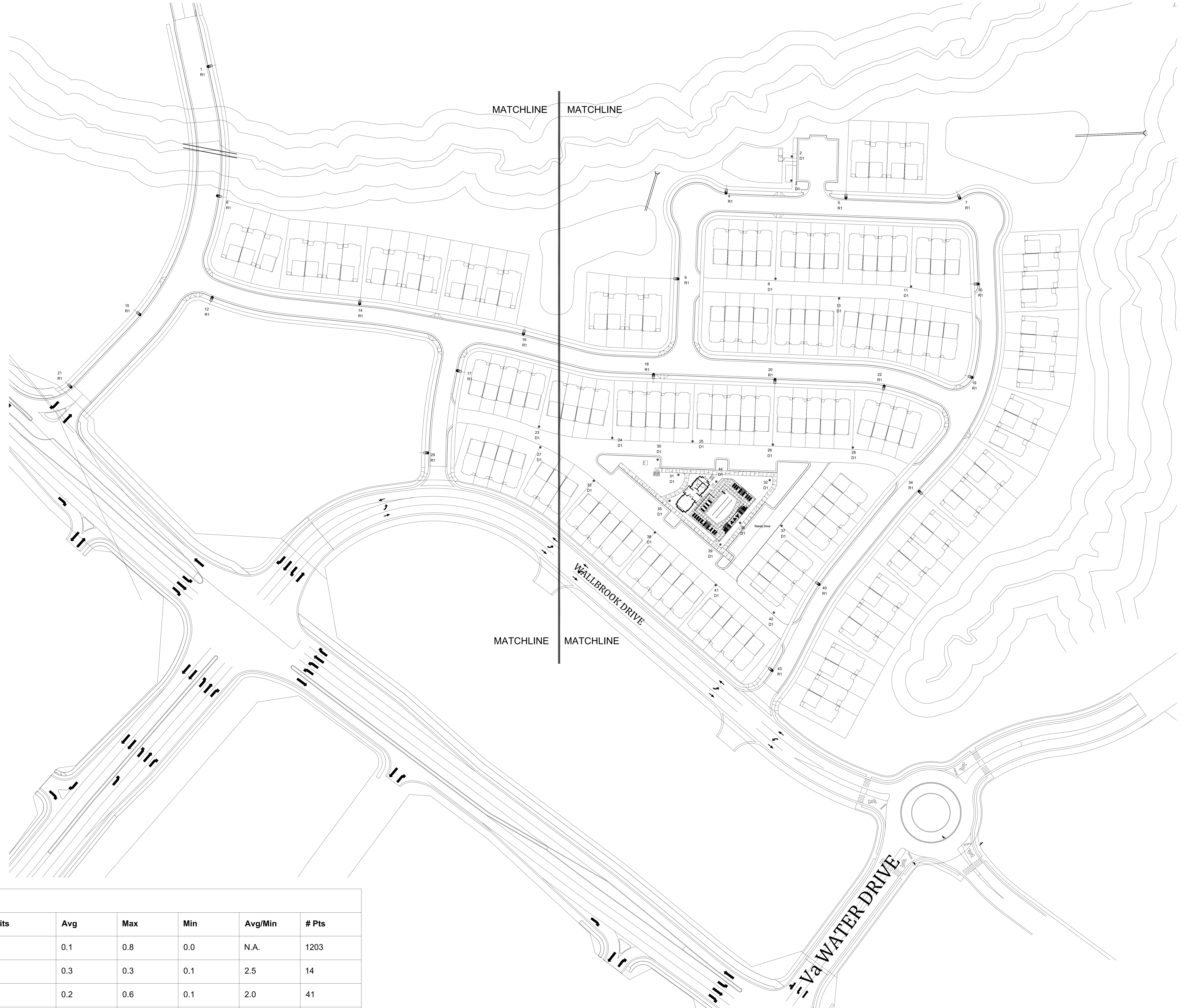

1 SITE LIGHTING PLAN
SCALE: 1"= 80'-0"

0' 80' 160'

Calculation Summary

Label	CalcType	Units	Avg	Max	Min	Avg/Min	# Pts
All CALC Points Shown 20'x20'AFG	Illuminance	Fc	0.1	0.8	0.0	N.A.	1203
Chimney Drive	Illuminance	Fc	0.3	0.3	0.1	2.5	14
Deep Oak Drive	Illuminance	Fc	0.2	0.6	0.1	2.0	41
Lettie Lane	Illuminance	Fc	0.2	0.3	0.1	1.8	67
Mail Kiosk	Illuminance	Fc	0.2	0.4	0.1	1.7	10
Randy Drive	Illuminance	Fc	0.2	0.6	0.1	1.9	11
Roles Way	Illuminance	Fc	0.3	0.7	0.1	2.8	47
Wall Creek Drive	Illuminance	Fc	0.2	0.3	0.1	2.0	54
Wallstone Way	Illuminance	Fc	0.2	0.4	0.1	2.0	101
Ziggy Lane	Illuminance	Fc	0.2	0.5	0.1	1.7	20

Luminaire Schedule

Symbol	Label	Qty	Arrangement	LLF	Description	Lum. Watts	Lum. Lumens	BUG Rating
	D1	23	SINGLE	0.950	AEL HTFL P10 XX 40K R3VC AP 8R Post Top Decorative Fixture / Pole - 14'-0 Pole	25.3	3221	B1-U5-G2
	R1	21	SINGLE	0.950	AEL ATBM 247L P25 XX 40K R3 AY LED Street Light / Pole - 35'-0 Mounting Height	34	3335	B1-U3-G2

BASED ON THE INFORMATION PROVIDED, ALL DIMENSIONS AND LUMINAIRE LOCATIONS SHOWN REPRESENT RECOMMENDED POSITIONS. THE ENGINEER AND/OR ARCHITECT **MUST** DETERMINE APPLICABILITY OF THE LAYOUT TO EXISTING OR FUTURE FIELD CONDITIONS.

THE LIGHTING PATTERN REPRESENTS ILLUMINATION LEVELS CALCULATED FROM LABORATORY DATA TAKEN UNDER THE CONTROLLED CONDITIONS UTILIZING CURRENT INDUSTRY STANDARD LAMP RATINGS IN ACCORDANCE WITH ILLUMINATING ENGINEERING SOCIETY APPROVED METHODS. ACTUAL PERFORMANCE OF ANY MANUFACTURER'S LUMINAIRE MAY VARY DUE TO VARIATION IN ELECTRICAL VOLTAGE, TOLERANCE IN LAMPS, AND OTHER VARIABLE FIELD CONDITIONS.

FOR ADDITIONAL LIGHTING INFORMATION CONTACT:
On-Site Lighting & Survey, LLC
PH: 763.684.1548

On-Site Lighting & Survey, LLC

1111 HIGHWAY 25 NORTH
SUITE 201
BUFFALO MN 55313

PH:763.684.1548
FAX:763.682.9048

ENGINEER
McADAMS
The John R. McAdams Company, Inc.
2905 Meridian Parkway
Durham, NC 27713

phone 919. 361. 5000
fax 919. 361. 2269
license number: C-0293, C-187

www.mcadamsco.com

PROPERTY OWNER
WALLBROOK LANDCO, LLC
4700 SIX FLAGS RD
RALEIGH, NC 27609

PROJECT INFO
WALLBROOK PROJECT
ROLESVILLE, NC

REVISIONS

#	DATE	INIT	DESCRIPTION
1	03.31.22	WRT	ROW AREA
2	04.20.22	WRT	ADD STREET LABELS
3	08.26.22	WRT	ADJUSTED LIGHT LOCATIONS DUE TO UTILITY CONFLICTS
4	03.28.2023	CDH	ADDED & REVISED LIGHTING AT NEW AMENITY AREA
5	03.29.2023	CDH	MOVED POLES #31 & #44 AT NEW AMENITY AREA
6	10.12.2023	CDH	MOVED POLES TO OTHER SIDE OF SIDEWALK

SHEET DESCRIPTION: SITE LIGHTING & SPECIFICATIONS

PROJECT #:

ISSUE DATE: 03.25.2022

DESIGN LEVEL: N.A.

AGI: W.TOKKESDAL

CAD: C.D.HEANER

SHEET#: SL2.0 REV #: 6

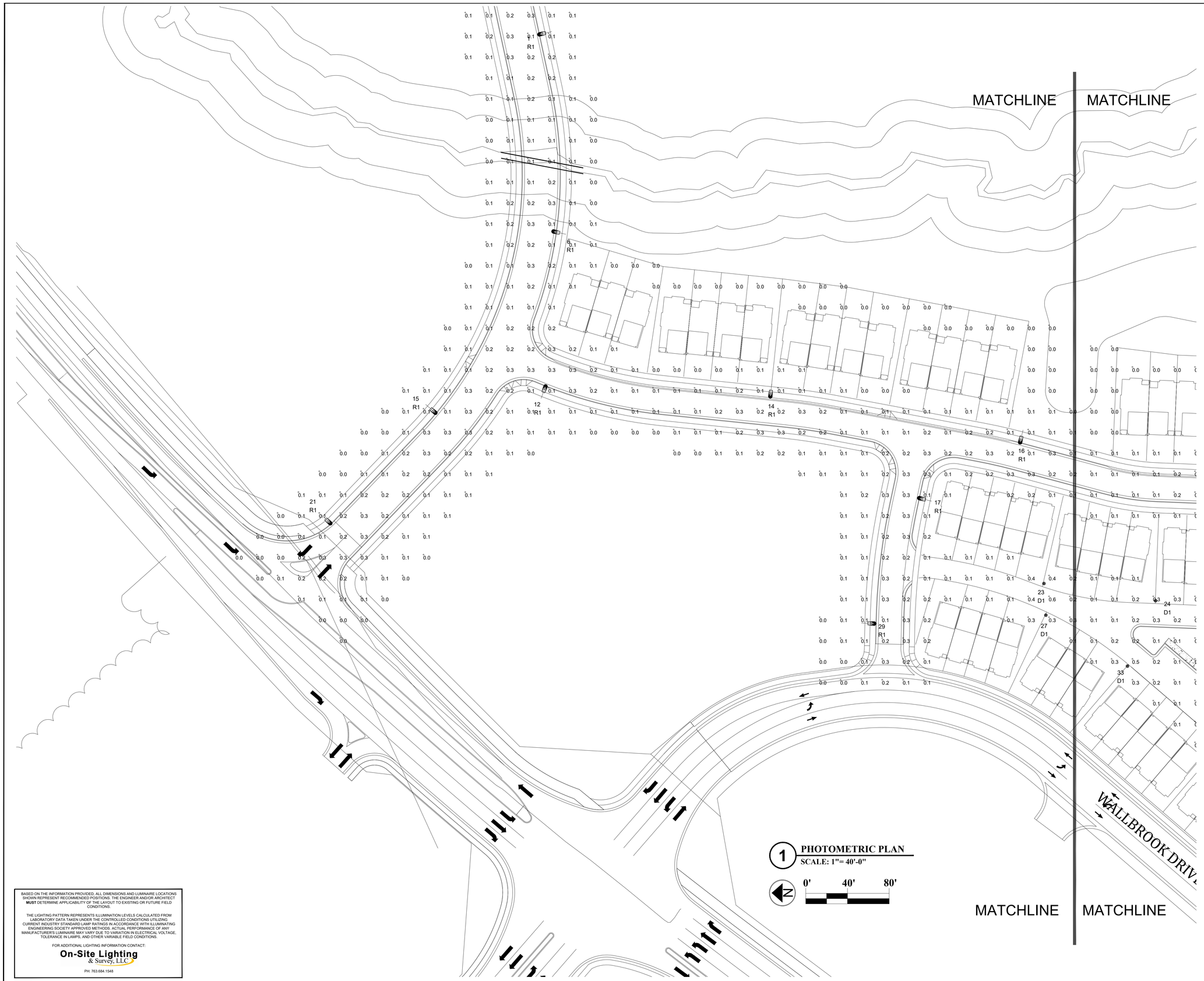

BASED ON THE INFORMATION PROVIDED, ALL DIMENSIONS AND LUMINAIRE LOCATIONS SHOWN REPRESENT RECOMMENDED POSITIONS. THE ENGINEER AND/OR ARCHITECT **MUST** DETERMINE APPLICABILITY OF THE LAYOUT TO EXISTING OR FUTURE FIELD CONDITIONS.

THE LIGHTING PATTERN REPRESENTS ILLUMINATION LEVELS CALCULATED FROM LABORATORY DATA TAKEN UNDER THE CONTROLLED CONDITIONS UTILIZING CURRENT INDUSTRY STANDARD LAMP RATINGS IN ACCORDANCE WITH ILLUMINATING ENGINEERING SOCIETY APPROVED METHODS. ACTUAL PERFORMANCE OF ANY MANUFACTURER'S LUMINAIRE MAY VARY DUE TO VARIATION IN ELECTRICAL VOLTAGE, TOLERANCE IN LAMPS, AND OTHER VARIABLE FIELD CONDITIONS.

FOR ADDITIONAL LIGHTING INFORMATION CONTACT:

On-Site Lighting & Survey, LLC

PH: 763.684.1548

On-Site Lighting & Survey, LLC

1111 HIGHWAY 25 NORTH
SUITE 201
BUFFALO MN 55313

PH:763.684.1548
FAX:763.682.9048

ENGINEER

McADAMS

The John R. McAdams Company, Inc.
2905 Meridian Parkway
Durham, NC 27713

phone 919. 361. 5000
fax 919. 361. 2269
license number: C-0293, C-187

www.mcadamsco.com

PROPERTY OWNER

WALLBROOK LANDCO, LLC
4700 SIX FLAGS RD
RALEIGH, NC 27609

PROJECT INFO

WALLBROOK PROJECT

ROLESVILLE, NC

REVISIONS

#	DATE	INIT	DESCRIPTION
1	03.31.22	WRT	ROW AREA
2	04.20.22	WRT	ADD STREET LABELS
3	08.26.22	WRT	ADJUSTED LIGHT LOCATIONS DUE TO UTILITY CONFLICTS
4	03.28.2023	CDH	ADDED & REVISED LIGHTING AT NEW AMENITY AREA
5	03.29.2023	CDH	MOVED POLES #31 & #44 AT NEW AMENITY AREA
6	10.12.2023	CDH	MOVED POLES TO OTHER SIDE OF SIDEWALK

SHEET DESCRIPTION: **PHOTOMETRIC PLAN**

PROJECT #:

ISSUE DATE: **03.25.2022**

DESIGN LEVEL: **N.A.**

AGI: W.TOKKESDAL

CAD: C.D.HEANER

SHEET#: **SL2.1**

REV #: **6**

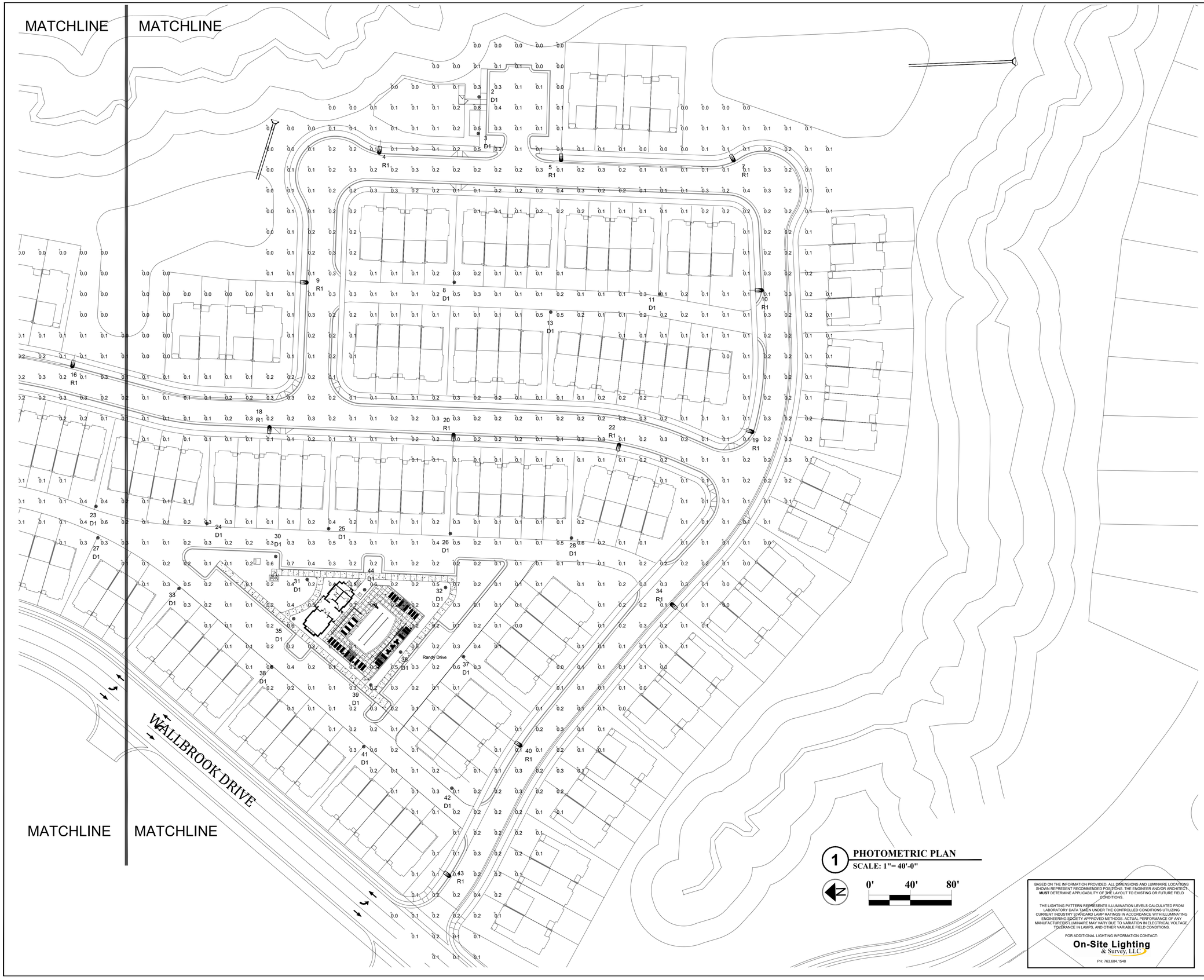

1 PHOTOMETRIC PLAN
SCALE: 1"= 40'-0"

0' 40' 80'

BASED ON THE INFORMATION PROVIDED, ALL DIMENSIONS AND LUMINAIRE LOCATIONS SHOWN REPRESENT RECOMMENDED POSITIONS. THE ENGINEER AND/OR ARCHITECT **MUST** DETERMINE APPLICABILITY OF THE LAYOUT TO EXISTING OR FUTURE FIELD CONDITIONS.

THE LIGHTING PATTERN REPRESENTS ILLUMINATION LEVELS CALCULATED FROM LABORATORY DATA TAKEN UNDER THE CONTROLLED CONDITIONS UTILIZING CURRENT INDUSTRY STANDARD LAMP RATINGS IN ACCORDANCE WITH ILLUMINATING ENGINEERING SOCIETY APPROVED METHODS. ACTUAL PERFORMANCE OF ANY MANUFACTURERS LUMINAIRE MAY VARY DUE TO VARIATION IN ELECTRICAL VOLTAGE, TOLERANCE IN LAMPS, AND OTHER VARIABLE FIELD CONDITIONS.

FOR ADDITIONAL LIGHTING INFORMATION CONTACT:

On-Site Lighting & Survey, LLC

PH: 763.684.1548

On-Site Lighting & Survey, LLC

1111 HIGHWAY 25 NORTH
SUITE 201
BUFFALO MN 55313

PH:763.684.1548
FAX:763.682.9048

ENGINEER

McADAMS
The John R. McAdams Company, Inc.
2905 Meridian Parkway
Durham, NC 27713

phone 919. 361. 5000
fax 919. 361. 2269
license number: C-0293, C-187

www.mcadamsco.com

PROPERTY OWNER

WALLBROOK LANDCO, LLC
4700 SIX FLAGS RD
RALEIGH, NC 27609

PROJECT INFO

WALLBROOK PROJECT

ROLESVILLE, NC

REVISIONS

#	DATE	INIT	DESCRIPTION
1	03.31.22	WRT	ROW AREA
2	04.20.22	WRT	ADD STREET LABELS
3	08.26.22	WRT	ADJUSTED LIGHT LOCATIONS DUE TO UTILITY CONFLICTS
4	03.28.2023	CDH	ADDED & REVISED LIGHTING AT NEW AMENITY AREA
5	03.29.2023	CDH	MOVED POLES #31 & #44 AT NEW AMENITY AREA
6	10.12.2023	CDH	MOVED POLES TO OTHER SIDE OF SIDEWALK

SHEET DESCRIPTION: **PHOTOMETRIC PLAN**

PROJECT #:

ISSUE DATE: **03.25.2022**

DESIGN LEVEL: **N.A.**

AGI: W.TOKKESDAL

CAD: C.D.HEANER

SHEET#: **SL2.2** REV #: **6**