HALL OF FAME CAR WASH AT WALLBROOK (LOT 8)

Town of Rolesville Project Numbers: SDP 25-01 / CID 24-03

US-401 Business / S. Main Street & Wall Creek Drive ~ Town of Rolesville ~ Wake County ~ North Carolina

V1

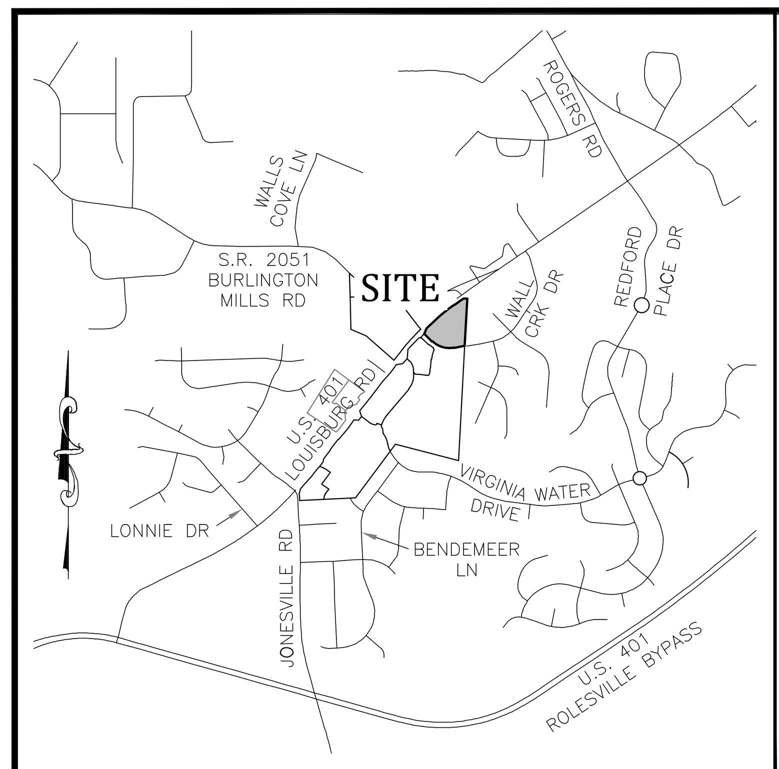

Vicinity Map

SCALE: 1" = 1000'

General Notes:

1. CONTACT NORTH CAROLINA ONE-CALL CENTER, INC. (NC ONE-CALL) AT 811 TO HAVE ALL UNDERGROUND UTILITIES LOCATED PRIOR TO EXCAVATING OR TRENCHING.
2. ALL REQUIRED IMPROVEMENTS SHALL CONFORM TO THE TOWN OF ROLESVILLE LAND DEVELOPMENT ORDINANCE AND THE TOWN OF ROLESVILLE DEVELOPMENT STANDARDS.
3. CONTRACTOR SHALL NOTIFY NCDOT AND TOWN OF ROLESVILLE PUBLIC WORKS, STREET MAINTENANCE DIVISION 48 HOURS PRIOR TO MAKING CONNECTIONS TO EXISTING STORM DRAINS LOCATED WITHIN PUBLIC STORM DRAINAGE EASEMENTS OR RIGHT-OF-WAY.
4. THIS PROPERTY IS LOCATED WITHIN ZONE 'X', AREAS DETERMINED TO BE OUTSIDE THE 0.2% ANNUAL CHANCE FLOODPLAIN, AS SHOWN ON NATIONAL FLOOD INSURANCE PROGRAM RATE MAP (FIRM) 3720175800K, EFFECTIVE DATE JULY 19, 2022.
5. EXISTING CONDITIONS AS DEPICTED ON THESE PLANS ARE GENERAL AND ILLUSTRATIVE IN NATURE AND MAY NOT INCLUDE ALL MECHANICAL, ELECTRICAL AND MISCELLANEOUS STRUCTURES. IT IS THE RESPONSIBILITY OF THE CONTRACTOR TO EXAMINE THE SITE AND BE FAMILIAR WITH EXISTING CONDITIONS PRIOR TO BIDDING ON THE WORK FOR THIS PROJECT. IF CONDITIONS ENCOUNTERED DURING EXAMINATION ARE SIGNIFICANTLY DIFFERENT THAN THOSE SHOWN, THE CONTRACTOR SHALL NOTIFY THE ENGINEER IMMEDIATELY.
6. ELECTRIC AND TELEPHONE UTILITIES SHALL BE INSTALLED UNDERGROUND.
7. REFER TO ARCHITECTURAL PLANS FOR BUILDING DIMENSIONS.
8. REFER TO M.E.P. PLANS FOR COORDINATION OF BUILDING UTILITY SERVICES.
9. THIS PROJECT DISTURBS MORE THAN ½ ACRE FOR PURPOSES OF A COMMERCIAL DEVELOPMENT. PROJECT IS SUBJECT TO THE TOWN OF ROLESVILLE STORMWATER MANAGEMENT ORDINANCE. STORMWATER MANAGEMENT PLAN APPROVAL BY THE TOWN OF ROLESVILLE IS REQUIRED.
10. THIS PROJECT DISTURBS MORE THAN 1 ACRE. EROSION & SEDIMENTATION CONTROL PLAN APPROVAL IS REQUIRED.
11. NCDOT DRIVEWAY PERMIT APPROVAL IS COMPLETED FOR THIS PROJECT. REFERENCE NCDOT PERMIT NUMBER D051-092-22-00049.
12. REFUSE COLLECTION SHALL BE PROVIDED BY PRIVATE SERVICE FOR COMMERCIAL DEVELOPMENT.
13. ALL DIMENSIONS ARE TO BACK OF CURB UNLESS OTHERWISE NOTED.
14. SITE SHALL MEET ALL RELATED ACCESSIBILITY CODE REQUIREMENTS.
15. BOUNDARY AND TOPOGRAPHIC SURVEY INFORMATION SHOWN HEREON WAS PREPARED BY JOHNSON, MIRMIRAN & THOMPSON. REFERENCE IS MADE TO THE SURVEY ENTITLED ALTA/NSPS LAND TITLE SURVEY PREPARED FOR WALLBROOK LANDCO, LLC DATED 3/28/2020, AND ATTACHED TO THIS DRAWING SET FOR REFERENCE.
16. UNDERGROUND UTILITIES PLOTTED IN PART FROM ACTUAL FIELD LOCATION OF ABOVE GROUND FEATURES AND IN PART FROM MAPS ON RECORD. ACTUAL LOCATIONS MAY VARY. SURVEYOR AND ENGINEER CANNOT PROVIDE ACCURACY OF INFORMATION TAKEN FROM RECORD DATA. OTHER UTILITIES MAY EXIST. CONTRACTOR SHOULD CONTACT NORTH CAROLINA ONE-CALL CENTER (NC ONE-CALL) BY DIALING 811 TO HAVE UNDERGROUND UTILITIES LOCATED PRIOR TO EXCAVATING OR TRENCHING.
17. THE ENGINEER MAKES NO GUARANTEE THAT THE UTILITIES SHOWN ARE COMPRISED OF ALL SUCH UTILITIES IN THE AREA OF SURVEY EITHER IN SERVICE OR ABANDONED. THE ENGINEER FURTHER DOES NOT WARRANT THAT THE UNDERGROUND UTILITIES SHOWN ARE IN THE EXACT LOCATION INDICATED. THE ENGINEER DOES HEREBY CERTIFY THAT ALL UTILITIES ARE LOCATED AS ACCURATELY AS POSSIBLE FROM INFORMATION AVAILABLE. THE ENGINEER HAS NOT PHYSICALLY UNCOVERED AND LOCATED ANY UNDERGROUND UTILITIES.
18. REFER TO 'WALLBROOK PRELIMINARY PLAT' PR 21-04 REV FOR OPEN SPACE CALCULATIONS AND REQUIREMENTS FOR THE WALLBROOK DEVELOPMENT

ATTENTION CONTRACTORS

The ***Construction Contractor*** responsible for the extension of water, sewer, and/or reuse, as approved in these plans, is responsible for ***contacting*** the ***Public Utilities Department*** at ***(919) 996-4540*** at least ***twenty four hours*** prior to beginning any of their construction.

Failure to notify both ***City Departments*** in advance of beginning construction, will result in the issuance of ***monetary fines***, and require reinstallation of any water or sewer facilities not inspected as a result of this notification failure.

Failure to call for ***Inspection***, ***Install a Downstream Plug***, have ***Permitted Plans*** on the ***Jobsite***, or any other ***Violation*** of ***City of Raleigh Standards*** will result in a ***Fine and Possible Exclusion*** from future work in the ***City of Raleigh***.

SITE PERMITTING APPROVAL

Water and Sewer Permits (if applicable)

The City of Raleigh consents to the connection and extension of the City's Public Sewer System as shown on this plan. The material and Construction methods used for this project shall conform to the standards and specifications of the City's Public Utilities Handbook. City of Raleigh Public Utilities Department Permit # S-____________

The City of Raleigh consents to the connection and extension of the City's Public Water System as shown on this plan. The material and Construction methods used for this project shall conform to the standards and specifications of the City's Public Utilities Handbook. City of Raleigh Public Utilities Department Permit # W-____________

The City of Raleigh consents to the connection to its public sewer system and extensions of the private sewer collection system as shown on this plan. The material and construction methods used for this project shall conform to the standards and specifications of the City's Public Utilities Handbook.
City of Raleigh Public Utilities Department Permit # S-____________

CITY OF RALEIGH - PLANS AUTHORIZED FOR CONSTRUCTION

Plans for the proposed use have been reviewed for general compliance with applicable codes. This limited review, and authorization for construction is not to be considered to represent total compliance with all legal requirements for development and construction. The property owner, design consultants, and contractors are each responsible for compliance with all applicable City, State and Federal laws. This specific authorization below is not a permit, nor shall it be construed to permit any violation of City, State or Federal Law. All Construction must be in accordance with all Local, State, and Federal Rules and Regulations.

Electronic Approval: This approval is being issued electronically. This approval is valid only upon the signature of a City of Raleigh Review Officer below. The City will retain a copy of the approved plans. Any work authorized by this approval must proceed in accordance with the plans kept on file with the City. This electronic approval may not be edited once issued. Any modification to this approval once issued will invalidate this approval.

City of Raleigh Development Approval ____________________
City of Raleigh Review Officer

811 KNOW WHAT'S BELOW CALL BEFORE YOU DIG! 1-800-632-4949 WWW.NC811.ORG

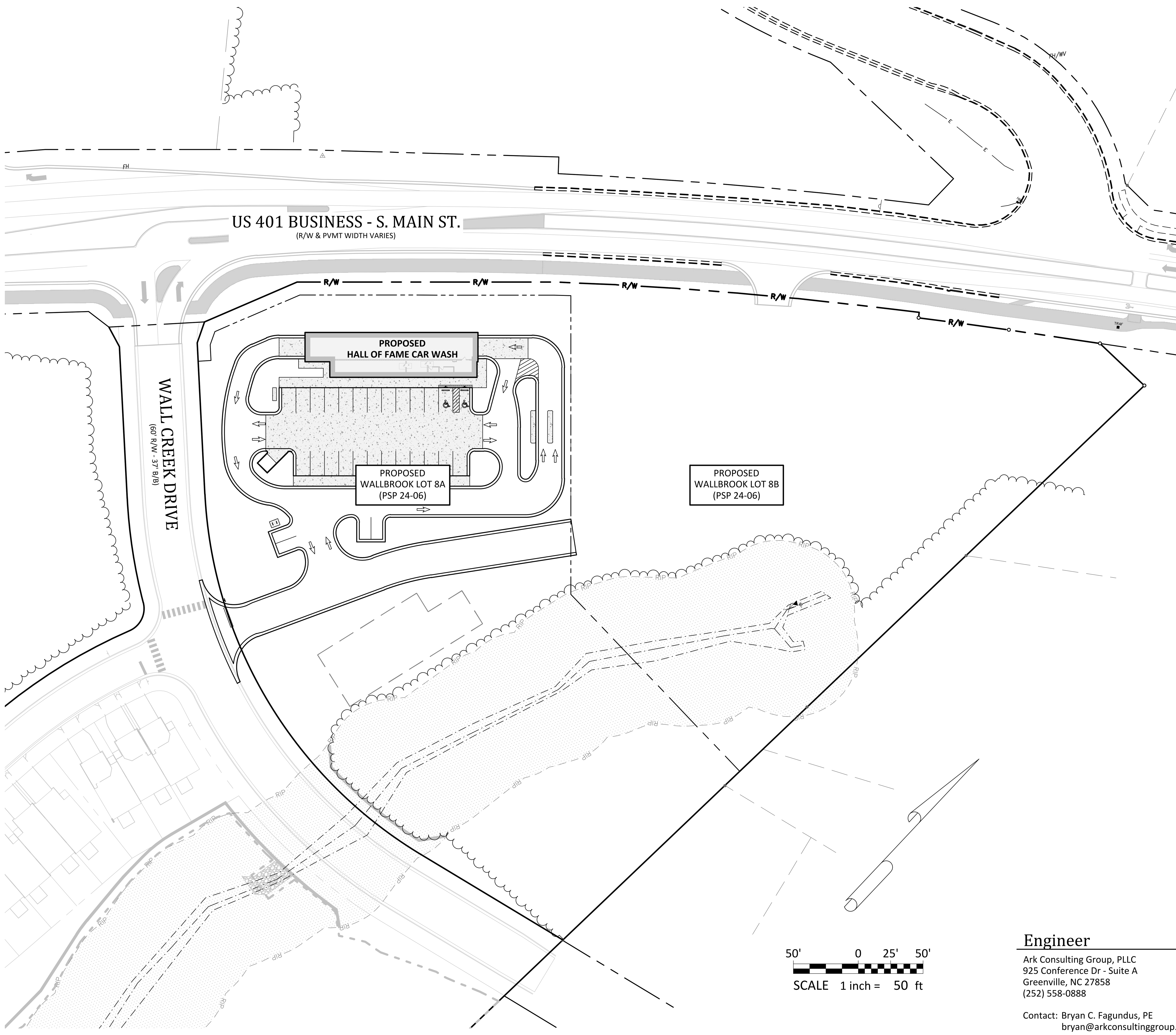

Site Data

WAKE COUNTY PIN:	1758-67-1871
REAL ESTATE ID:	509438
CURRENT ZONING:	GC-CZ
TOTAL ACREAGE IN SITE:	2.93 AC (PROPOSED LOT 8A) (LOT 8 = 5.35 AC)
TOTAL ACREAGE IN PROJECT LIMITS:	1.81 AC (8A) / 3.64 AC (TOTAL)
DISTURBED ACREAGE:	1.81 AC (8A) / 3.1 AC (TOTAL)
WATERSHED:	Lower Neuse
RIVER BASIN:	Neuse
CURRENT USE:	VACANT / WOODED
PROPOSED USE:	NON-RESIDENTIAL / CAR WASH / RETAIL
REQUIRED BUILDING SETBACKS:	35' (REAR), 25' (CORNER), 20' (FRONT), 15' (SIDE)
BUILDING FLOOR AREA:	4,383 SF
BUILDING LOT COVERAGE:	0% EXIST., 3.4% PROPOSED
BUILDING HEIGHT:	28'-8" (1 STORY)
TOTAL NUMBER OF PARKING SPACES REQUIRED:	10 SPACES (INCL. 1 H/C) + 1 BICYCLE SPACE
TOTAL NUMBER OF PROPOSED PARKING SPACES:	29 SPACES (INCL. 2 H/C) + 4 BICYCLE SPACES
TOTAL SQ. FEET OF EXIST. IMPERVIOUS AREA:	0 SF
TOTAL SQ. FEET OF PROP. IMPERVIOUS AREA:	41,161 SF (32% - LOT 8A)
DEVELOPMENT STANDARDS:	LDO
REFERENCES:	DB 18103, PG 1563 BM 2023, PG 1602 BM 1995, PG 2034
ADDRESS:	S. MAIN STREET

Parking Requirements:

PARKING REQUIRED:	RETAIL SALES AND SERVICES	
	BICYCLE PARKING: 1 / 5000 SF = 3746 / 5000	1 SPACE
	MINIMUM: 2.5 / 1000 SF = 3960 / 1000 * 2.5	10 SPACES
	MAXIMUM: 7.5 / 1000 SF = 3960 / 1000 * 7.5	30 SPACES
	TOTAL REQUIRED PARKING:	10 SPACES + 1 BICYCLE PARKING
	REQUIRED HANDICAP PARKING:	1 SPACES
	PARKING PROVIDED:	27 SPACES (INCL. 2 H/C) 4 BICYCLE PARKS

Sheet Index

#	Title
C0.1	COVER
C0.2	EXISTING CONDITIONS
C1.0	EROSION CONTROL NOTES
C1.1	EROSION CONTROL PLAN - PHASE 1
C1.2	EROSION CONTROL PLAN - PHASE 2
C2.0	SITE PLAN
C3.0	UTILITY PLAN
C4.0	GRADING & DRAINAGE PLAN
C5.0	REQUIRED VEGETATION PLAN
C6.1	MISC. DETAILS
C6.2	MISC. DETAILS
C6.3	MISC. DETAILS
C6.4	MISC. DETAILS

Engineer

Ark Consulting Group, PLLC
925 Conference Dr - Suite A
Greenville, NC 27858
(252) 558-0888

Contact: Bryan C. Fagundus, PE
bryan@arkconsultinggroup.com

Owner

Wallbrook Landco, LLC
3 Keel St, Ste 2
Wrightsville Beach, NC 28480
(704) 621-6430

Contact: Austin Williams
awilliams@csere.com

Developer

Hall of Fame Car Wash
19000 Davidson Concord Road
Davidson, NC 28036
(540) 257-0022

Contact: Jimmy Politis
jimmy@hofcarwash.com

4. **Holding Comment** – This lot must be recorded (Final subdivision plat, FSP) prior to SDP/CID approval.

FINAL SUBDIVISION PLAT ALSO SUBMITTED FOR MARCH REVIEW CYCLE.

Wake Co Fire / EMS - Brittany Lingle/Stephen Wolf	**Provide diagram indicating firetruck can navigate parking lot- 50 ft truck length

EXHIBIT PROVIDED

EROSION CONTROL, STORMWATER AND FLOODPLAIN MANAGEMENT

APPROVED

EROSION CONTROL ☒ S-EC-_____-2024
STORMWATER MGMT. ☒ S-WF-_____-2024
FLOOD STUDY ☐ S-____________
DATE____________

WAKE COUNTY NORTH CAROLINA EFFECTIVE: 08/23/17
ENVIRONMENTAL CONSULTANT SIGNATURE

Town of Rolesville Development Applications

ANX 23-03	ANNEXATION
MA 21-09	REZONING
PR 21-04 REV	PRELIMINARY SUBDIVISION PLAT (REVISED)
FSP 23-09	INTERMEDIATE SUBDIVISION PLAT
PSP 24-06	PRELIMINARY SUBDIVISION PLAT (LOT 8)
CID 24-03	WALLBROOK LOT 8 - MASS GRADING / EROSION CONTROL
SDP 25-01	SITE DEVELOPMENT PLAN (CURRENT APPLICATION)

Rolesville
Genuine Community • Capital Connection
Est. 1837

#	DATE	DESCRIPTION
1	2-JAN-25	INITIAL SUBMITTAL FOR REVIEW

REVISIONS:

COVER

HALL OF FAME CAR WASH
WALLBROOK - LOT 8
Town of Rolesville Project No. SDP 25-01
US 401 Business / S. Main Street & Wall Creek Drive
Wake Forest Township, Town of Rolesville, Wake County, North Carolina

NC License: P-1199
ARK CONSULTING GROUP, PLLC
ENGINEERS & SURVEYORS
925-A Conference Drive
Greenville, NC 27858
(252) 558-0888
www.arkconsultinggroup.com

NORTH CAROLINA PROFESSIONAL SEAL 041670 ENGINEER BRYAN C. FAGUNDUS
PRELIMINARY Do Not Use for Construction
1/2/2025

Project Manager:	BCF
Drawn By:	DLC
Checked By:	TGN
Project Number:	24137
Drawing Number:	D-1525

C0.1

Date: January 2, 2025

D:\ARK DROPBOX\01 - PROJECTS\ACTIVE\CROSLAND SE\24137 - WALLBROOK - LOT 8\D - DWG\03 - FINAL\D-1525 - SP_LOT8A_HOF.DWG, 0.1 - COVER, Lee Christman, Fri, Jan 03, 2025 @ 9:37 PM

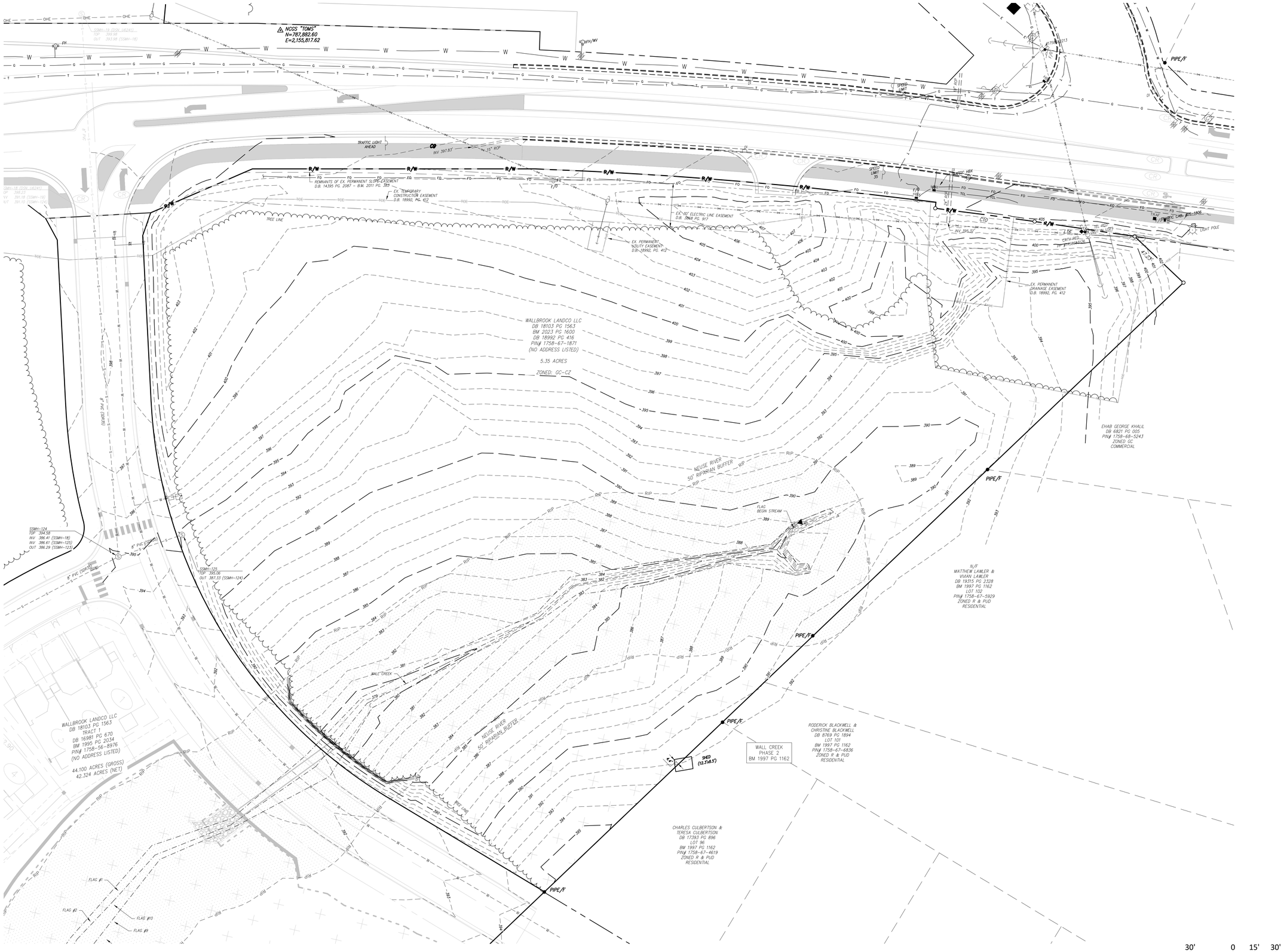

KNOW WHAT'S BELOW
CALL BEFORE YOU DIG!
1-800-632-4949
WWW.NC811.ORG

#	DATE	DESCRIPTION
1	2-JAN-25	INITIAL SUBMITTAL FOR REVIEW

REVISIONS:

EXISTING CONDITIONS

HALL OF FAME CAR WASH

WALLBROOK - LOT 8

Town of Rolesville Project No. SDP 25-01

US 401 Business / S. Main Street & Wall Creek Drive

Wake Forest Township, Town of Rolesville, Wake County, North Carolina

NC License: P-1199

ARK CONSULTING GROUP PLLC
ENGINEERS & SURVEYORS

925-A Conference Drive
Greenville, NC 27858
(252) 558-0888
www.arkconsultinggroup.com

NORTH CAROLINA PROFESSIONAL ENGINEER SEAL 039121 TONY GREGORY FAGUNDES

PRELIMINARY FOR CONSTRUCTION

1/2/2025

Project Manager:	BCF
Drawn By:	DLC
Checked By:	TGN
Project Number:	24137
Drawing Number:	D-1525

C0.2

Date: January 2, 2025

GROUND STABILIZATION AND MATERIALS HANDLING PRACTICES FOR COMPLIANCE WITH THE NCG01 CONSTRUCTION GENERAL PERMIT

Implementing the details and specifications on this plan sheet will result in the construction activity being considered compliant with the Ground Stabilization and Materials Handling sections of the NCG01 Construction General Permit (Sections E and F, respectively). The permittee shall comply with the Erosion and Sediment Control plan approved by the delegated authority having jurisdiction. All details and specifications shown on this sheet may not apply depending on site conditions and the delegated authority having jurisdiction.

SECTION E: GROUND STABILIZATION

Required Ground Stabilization Timeframes		
Site Area Description	**Stabilize within this many calendar days after ceasing land disturbance**	**Timeframe variations**
(a) Perimeter dikes, swales, ditches, and perimeter slopes	7	None
(b) High Quality Water (HQW) Zones	7	None
(c) Slopes steeper than 3:1	7	If slopes are 10' or less in length and are not steeper than 2:1, 14 days are allowed
(d) Slopes 3:1 to 4:1	14	-7 days for slopes greater than 50' in length and with slopes steeper than 4:1 -7 days for perimeter dikes, swales, ditches, perimeter slopes and HQW Zones -10 days for Falls Lake Watershed
(e) Areas with slopes flatter than 4:1	14	-7 days for perimeter dikes, swales, ditches, perimeter slopes and HQW Zones -10 days for Falls Lake Watershed unless there is zero slope

Note: After the permanent cessation of construction activities, any areas with temporary ground stabilization shall be converted to permanent ground stabilization as soon as practicable but in no case longer than 90 calendar days after the last land disturbing activity. Temporary ground stabilization shall be maintained in a manner to render the surface stable against accelerated erosion until permanent ground stabilization is achieved.

GROUND STABILIZATION SPECIFICATION

Stabilize the ground sufficiently so that rain will not dislodge the soil. Use one of the techniques in the table below:

Temporary Stabilzation	Permanent Stabilzation
• Temporary grass seed covered with straw or other mulches and tackifiers • Hydroseeding • Rolled erosion control products with or without temporary grass seed • Appropriately applied straw or other mulch • plastic sheeting	• Permanent grass seed covered with straw or other mulches and tackifiers • Geotextile fabrics such as permanent soil reinforcement matting • Hydroseeding • Shrubs or other permanent plantings covered with mulch • Uniform and evenleyh distributed ground cover sufficient to restrain erosion • Structural methods such as concrete, asphalt, or retaining walls • Rolled erosion control products with grass seed

POLYACRYLAMIDES (PAMS) AND FLOCCULANTS

1. Select flocculants that are appropriate for the soils being exposed during construction, selecting from the *NC DWR List of Approved PAMS/Flocculants*.
2. Apply flocculants at or before the inlets to Erosion and Sediment Control Measures.
3. Apply flocculants at the concentrations specified in the *NC DWR List of Approved PAMS/Flocculants* and in accordance with the manufacturer's instructions.
4. Provide ponding area for containment of treated Stormwater before discharging offsite.
5. Store flocculants in leak-proof containers that are kept under storm-resistant cover or surrounded by secondary containment structures.

EQUIPMENT AND VEHICLE MAINTENANCE

1. Maintain vehicles and equipment to prevent discharge of fluids.
2. Provide drip pans under any stored equipment.
3. Identify leaks and repair as soon as feasible, or remove leaking equipment from the project.
4. Collect all spent fluids, store in separate containers and properly dispose as hazardous waste (recycle when possible).
5. Remove leaking vehicles and construction equipment from service until the problem has been corrected.
6. Bring used fuels, lubricants, coolants, hydraulic fluids and other petroleum products to a recycling or disposal center that handles these materials.

LITTER, BUILDING MATERIAL AND LAND CLEARING WASTE

1. Never bury or burn waste. Place litter and debris in approved waste containers.
2. Provide a sufficient number and size of waste containers (e.g dumpster, trash receptacle) on site to contain construction and domestic wastes.
3. Locate waste containers at least 50 feet away from storm drain inlets and surface waters unless no other alternatives are reasonably available.
4. Locate waste containers on areas that do not receive substantial amounts of runoff from upland areas and does not drain directly to a storm drain, stream or wetland.
5. Cover waste containers at the end of each workday and before storm events or provide secondary containment. Repair or replace damaged waste containers.
6. Anchor all lightweight items in waste containers during times of high winds.
7. Empty waste containers as needed to prevent overflow. Clean up immediately if containers overflow.
8. Dispose waste off-site at an approved disposal facility.
9. On business days, clean up and dispose of waste in designated waste containers.

PAINT AND OTHER LIQUID WASTE

1. Do not dump paint and other liquid waste into storm drains, streams or wetlands.
2. Locate paint washouts at least 50 feet away from storm drain inlets and surface waters unless no other alternatives are reasonably available.
3. Contain liquid wastes in a controlled area.
4. Containment must be labeled, sized and placed appropriately for the needs of site.
5. Prevent the discharge of soaps, solvents, detergents and other liquid wastes from construction sites.

PORTABLE TOILETS

1. Install portable toilets on level ground, at least 50 feet away from storm drains, streams or wetlands unless there is no alternative reasonably available. If 50 foot offset is not attainable, provide relocation of portable toilet behind silt fence or place on a gravel pad and surround with sand bags.
2. Provide staking or anchoring of portable toilets during periods of high winds or in high foot traffic areas.
3. Monitor portable toilets for leaking and properly dispose of any leaked material. Utilize a licensed sanitary waste hauler to remove leaking portable toilets and replace with properly operating unit.

EARTHEN STOCKPILE MANAGEMENT

1. Show stockpile locations on plans. Locate earthen-material stockpile areas at least 50 feet away from storm drain inlets, sediment basins, perimeter sediment controls and surface waters unless it can be shown no other alternatives are reasonably available.
2. Protect stockpile with silt fence installed along toe of slope with a minimum offset of five feet from the toe of stockpile.
3. Provide stable stone access point when feasible.
4. Stabilize stockpile within the timeframes provided on this sheet and in accordance with the approved plan and any additional requirements. Soil stabilization is defined as vegetative, physical or chemical coverage techniques that will restrain accelerated erosion on disturbed soils for temporary or permanent control needs.

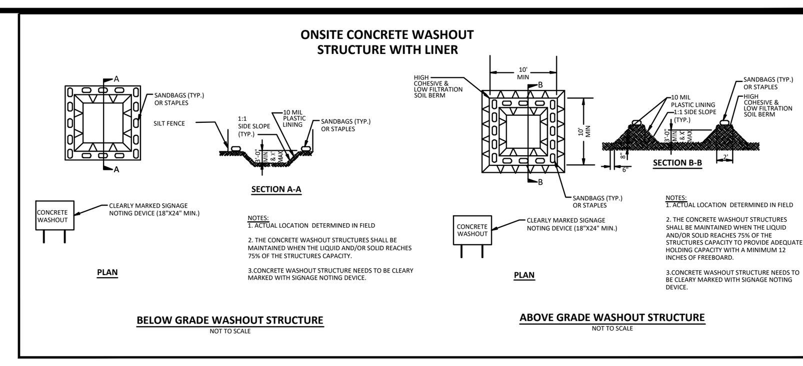

CONCRETE WASHOUTS

1. Do not discharge concrete or cement slurry from the site.
2. Dispose of, or recycle settled, hardened concrete residue in accordance with local and state solid waste regulations and at an approved facility.
3. Manage washout from mortar mixers in accordance with the above item and in addition place the mixer and associated materials on impervious barrier and within lot perimeter silt fence.
4. Install temporary concrete washouts per local requirements, where applicable. If an alternate method or product is to be used, contact your approval authority for review and approval. If local standard details are not available, use one of the two types of temporary concrete washouts provided on this detail.
5. Do not use concrete washouts for dewatering or storing defective curb or sidewalk sections. Stormwater accumulated within the washout may not be pumped into or discharged to the storm drain system or receiving surface waters. Liquid waste must be pumped out and removed from project.
6. Locate washouts at least 50 feet from storm drain inlets and surface waters unless it can be shown that no other alternatives are reasonably available. At a minimum, install protection of storm drain inlet(s) closest to the washout which could receive spills or overflow.
7. Locate washouts in an easily accessible area, on level ground and install a stone entrance pad in front of the washout. Additional controls may be required by the approving authority.
8. Install at least one sign directing concrete trucks to the washout within the project limits. Post signage on the washout itself to identify this location.
9. Remove leavings from the washout when at approximately 75% capacity to limit overflow events. Replace the tarp, sand bags or other temporary structural components when no longer functional. When utilizing alternative or proprietary products, follow manufacturer's instructions.
10. At the completion of the concrete work, remove remaining leavings and dispose of in an approved disposal facility. Fill pit, if applicable, and stabilize any disturbance caused by removal of washout.

HERBICIDES, PESTICIDES AND RODENTICIDES

1. Store and apply herbicides, pesticides and rodenticides in accordance with label restrictions.
2. Store herbicides, pesticides and rodenticides in their original containers with the label, which lists directions for use, ingredients and first aid steps in case of accidental poisoning.
3. Do not store herbicides, pesticides and rodenticides in areas where flooding is possible or where they may spill or leak into wells, stormwater drains, ground water or surface water. If a spill occurs, clean area immediately.
4. Do not stockpile these materials onsite.

HAZARDOUS AND TOXIC WASTE

1. Create designated hazardous waste collection areas on-site.
2. Place hazardous waste containers under cover or in secondary containment.
3. Do not store hazardous chemicals, drums or bagged materials directly on the ground.

NCG01 GROUND STABILIZATION AND MATERIALS HANDLING

EFFECTIVE: 04/01/19

PART III
SELF-INSPECTION, RECORDKEEPING AND REPORTING

SECTION A: SELF-INSPECTION

Self-inspections are required during normal business hours in accordance with the table below. When adverse weather or site conditions would cause the safety of the inspection personnel to be in jeopardy, the inspection may be delayed until the next business day on which it is safe to perform the inspection. In addition, when a storm event of equal to or greater than 1.0 inch occurs outside of normal business hours, the self-inspection shall be performed upon the commencement of the next business day. Any time when inspections were delayed shall be noted in the Inspection Record.

Inspect	Frequency (during normal business hours)	Inspection records must include:
(1) Rain gauge maintained in good working order	Daily	Daily rainfall amounts. If no daily rain gauge observations are made during weekend or holiday periods, and no individual-day rainfall information is available, record the cumulative rain measurement for those un-attended days (and this will determine if a site inspection is needed). Days on which no rainfall occurred shall be recorded as "zero." The permittee may use another rain-monitoring device approved by the Division.
(2) E&SC Measures	At least once per 7 calendar days and within 24 hours of a rain event ≥ 1.0 inch in 24 hours	1. Identification of the measures inspected, 2. Date and time of the inspection, 3. Name of the person performing the inspection, 4. Indication of whether the measures were operating properly, 5. Description of maintenance needs for the measure, 6. Description, evidence, and date of corrective actions taken.
(3) Stormwater discharge outfalls (SDOs)	At least once per 7 calendar days and within 24 hours of a rain event ≥ 1.0 inch in 24 hours	1. Identification of the discharge outfalls inspected, 2. Date and time of the inspection, 3. Name of the person performing the inspection, 4. Evidence of indicators of stormwater pollution such as oil sheen, floating or suspended solids or discoloration, 5. Indication of visible sediment leaving the site, 6. Description, evidence, and date of corrective actions taken.
(4) Perimeter of site	At least once per 7 calendar days and within 24 hours of a rain event ≥ 1.0 inch in 24 hours	If visible sedimentation is found outside site limits, then a record of the following shall be made: 1. Actions taken to clean up or stabilize the sediment that has left the site limits, 2. Description, evidence, and date of corrective actions taken, and 3. An explanation as to the actions taken to control future releases.
(5) Streams or wetlands onsite or offsite (where accessible)	At least once per 7 calendar days and within 24 hours of a rain event ≥ 1.0 inch in 24 hours	If the stream or wetland has increased visible sedimentation or a stream has visible increased turbidity from the construction activity, then a record of the following shall be made: 1. Description, evidence and date of corrective actions taken, and 2. Records of the required reports to the appropriate Division Regional Office per Part III, Section C, Item (2)(a) of this permit.
(6) Ground stabilization measures	After each phase of grading	1. The phase of grading (installation of perimeter E&SC measures, clearing and grubbing, installation of storm drainage facilities, completion of all land-disturbing activity, construction or redevelopment, permanent ground cover). 2. Documentation that the required ground stabilization measures have been provided within the required timeframe or an assurance that they will be provided as soon as possible.

NOTE: The rain inspection resets the required 7 calendar day inspection requirement.

PART III
SELF-INSPECTION, RECORDKEEPING AND REPORTING

SECTION B: RECORDKEEPING

1. E&SC Plan Documentation

The approved E&SC plan as well as any approved deviation shall be kept on the site. The approved E&SC plan must be kept up-to-date throughout the coverage under this permit. The following items pertaining to the E&SC plan shall be kept on site and available for inspection at all times during normal business hours.

Item to Document	Documentation Requirements
(a) Each E&SC Measure has been installed and does not significantly deviate from the locations, dimensions and relative elevations shown on the approved E&SC Plan.	Initial and date each E&SC Measure on a copy of the approved E&SC Plan or complete, date and sign an inspection report that lists each E&SC measure shown on the approved E&SC Plan. This documentation is required upon the initial installation of the E&SC measures or if the E&SC measures are modified after initial installation.
(b) A phase of grading has been completed.	Initial and date a copy of the approved E&SC plan or complete, date and sign an inspection report to indicate completion of the construction phase.
(c) Ground cover is located and installed in accordance with the approved E&SC Plan.	Initial and date a copy of the approved E&SC plan or complete, date and sign an inspection report to indicate compliance with approved ground cover specifications.
(d) The maintenance and repair requirements for all E&SC Measures have been performed.	Complete, date and sign an inspection report.
(e) Corrective actions have been taken to E&SC measures.	Initial and date a copy of the approved E&SC Plan or complete, date and sign an inspection report to indicate the completion of the corrective action.

2. Additional Documentation

In addition to the E&SC plan documents above, the following items shall be kept on the site and available for inspectors at all times during normal business hours, unless the Division provides a site-specific exemption based on unique site conditions that make this requirement not practical:

(a) This General Permit as well as the Certificate of Coverage, after it is received.

(b) Records of inspections made during the previous twelve months. The permittee shall record the required observations on the Inspection Record Form provided by the Division or a similar inspection form that includes all the required elements. Use of electronically-available records in lieu of the required paper copies will be allowed if shown to provide equal access and utility as the hard-copy records.

3. Documentation to be Retained for Three Years

All data used to complete the e-NIO and all inspection records shall be maintained for a period of three years after project completion and made available upon request. [40 CFR 122.41]

PART III
SELF-INSPECTION, RECORDKEEPING AND REPORTING

SECTION C: REPORTING

1. Occurrences that Must be Reported

Permittees shall report the following occurrences:

(a) Visible sediment deposition in a stream or wetland.

(b) Oil spills if:
- They are 25 gallons or more,
- They are less than 25 gallons but cannot be cleaned up within 24 hours,
- They cause sheen on surface waters (regardless of volume), or
- They are within 100 feet of surface waters (regardless of volume).

(a) Releases of hazardous substances in excess of reportable quantities under Section 311 of the Clean Water Act (Ref: 40 CFR 110.3 and 40 CFR 117.3) or Section 102 of CERCLA (Ref: 40 CFR 302.4) or G.S. 143-215.85.

(b) Anticipated bypasses and unanticipated bypasses.

(c) Noncompliance with the conditions of this permit that may endanger health or the environment.

2. Reporting Timeframes and Other Requirements

After a permittee becomes aware of an occurrence that must be reported, he shall contact the appropriate Division regional office within the timeframes and in accordance with the other requirements listed below. Occurrences outside normal business hours may also be reported to the Department's Environmental Emergency Center personnel at (800) 858-0368.

Occurrence	Reporting Timeframes (After Discovery) and Other Requirements
(a) Visible sediment deposition in a stream or wetland	· ***Within 24 hours***, an oral or electronic notification. · ***Within 7 calendar days***, a report that contains a description of the sediment and actions taken to address the cause of the deposition. Division staff may waive the requirement for a written report on a case-by-case basis. · If the stream is named on the NC 303(d) list as impaired for sediment-related causes, the permittee may be required to perform additional monitoring, inspections or apply more stringent practices if staff determine that additional requirements are needed to assure compliance with the federal or state impaired-waters conditions.
(b) Oil spills and release of hazardous substances per Item 1(b)-(c) above	· ***Within 24 hours***, an oral or electronic notification. The notification shall include information about the date, time, nature, volume and location of the spill or release.
(c) Anticipated bypasses [40 CFR 122.41(m)(3)]	· ***A report at least ten days before the date of the bypass, if possible.*** The report shall include an evaluation of the anticipated quality and effect of the bypass.
(d) Unanticipated bypasses [40 CFR 122.41(m)(3)]	· ***Within 24 hours***, an oral or electronic notification. · ***Within 7 calendar days***, a report that includes an evaluation of the quality and effect of the bypass.
(e) Noncompliance with the conditions of this permit that may endanger health or the environment[40 CFR 122.41(l)(7)]	· ***Within 24 hours,*** an oral or electronic notification. · ***Within 7 calendar days,*** a report that contains a description of the noncompliance, and its causes; the period of noncompliance, including exact dates and times, and if the noncompliance has not been corrected, the anticipated time noncompliance is expected to continue; and steps taken or planned to reduce, eliminate, and prevent reoccurrence of the noncompliance. [40 CFR 122.41(l)(6). · Division staff may waive the requirement for a written report on a case-by-case basis.

PART II, SECTION G, ITEM (4)
DRAW DOWN OF SEDIMENT BASINS FOR MAINTENANCE OR CLOSE OUT

Sediment basins and traps that receive runoff from drainage areas of one acre or more shall use outlet structure that withdraw water from the surface when these devices need to be drawn down for maintenance or close out unless this is infeasible. The circumstances in which it is not feasible to withdraw water from the surface shall be rare (for example, times with extended cold weather). Non-surface withdrawals from sediment basins shall be allowed only when all of the following criteria have been met:

(a) The E&SC plan authority has been provided with documentation of the non-surface withdrawal and the specific time periods or conditions in which it will occur. The non-surface withdrawal shall not commence until the E&SC plan authority has approved these items,
(b) The non-surface withdrawal has been reported as an anticipated bypass in accordance with Part III, Section C, Item (2)(c) and (d) of this permit,
(c) Dewatering discharges are treated with controls to minimize discharges of pollutants from stormwater that is removed from the sediment basin. Examples of appropriate controls include properly sited, designed and maintained dewatering tanks, weir tanks, and filtration systems,
(d) Vegetated, upland areas of the sites are a properly designed stone pad is used to the extent feasible at the outlet of the dewatering treatment devices described in item (c) above,
(e) Velocity dissipation devices such as check dams, sediment traps, and riprap are provided at the discharge points of all dewatering devices, and
(f) Sediment removed from the dewatering treatment devices described in item (c) above is disposed of in a manner that does not cause deposition of sediment into water of the United States.

NCG01 SELF-INSPECTION, RECORDKEEPING AND REPORTING

EFFECTIVE: 04/01/19

WAKE COUNTY Environmental Services — Sedimentation & Erosion Control — 336 Fayetteville St. • P.O. Box 550 • Raleigh, NC 27602 — TEL 919 856 7400 FAX 919 743 4772

Effective September 1, 2008
Soil stockpiles shall be located on the approved plan and shall adhere to the following requirements:

Design Criteria
a. A 25-foot temporary maintenance and access easement shall be shown around all proposed stockpiles (erosion control measures surrounding the stockpile shall be shown at the outer limit of this easement).
b. Stockpile footprints shall be setback a minimum of 25' from adjacent property lines.
c. A note shall be provided on the approved plan that stockpile height shall not exceed 35 feet.
d. Stockpile slopes shall be 2:1 or flatter.
e. Approved BMPs shall be shown on a plan to control any potential sediment loss from a stockpile.
f. Stockpiling materials adjacent to a ditch, drainageway, watercourse, wetland, stream buffer, or other body of water shall be avoided unless an alternative location is demonstrated to be unavailable.
g. Any concentrated flow likely to affect the stockpile shall be diverted to an approved BMP.
h. Off-site spoil or borrow areas must be in compliance with Wake County UDO and State Regulations. All spoil areas over an acre are required to have an approved sediment control plan. Developer/Contractor shall notify Wake County of any offsite disposal of soil, prior to disposal. Fill of FEMA Floodways and Non-encroachment Areas are prohibited except as otherwise provided by subsection 14-19-2 of the Wake County Unified Development Ordinance (certifications and permits required).

Maintenance Requirements to be Noted on the Plan
i. Seeding or covering stockpiles with tarps or mulch is required and will reduce erosion problems. Tarps should be keyed in at the top of the slope to keep water from running underneath the plastic.
j. If a stockpile is to remain for future use after the project is complete (builders, etc.), the financial responsible party must notify Wake County of a new responsible party for that stockpile.
k. The approved plan shall provide for the use of staged seeding and mulching on a continual basis while the stockpile is in use.
l. Establish and maintain a vegetative buffer at the toe of the slope (where practical).

Wake County Basin Removal Sequence:

1. SCHEDULE A SITE MEETING WITH THE ENVIRONMENTAL CONSULTANT TO DETERMINE IF A BASIN CAN BE REMOVED. INSTALL SILT FENCING OR OTHER TEMPORARY EROSION CONTROL MEASURES AS NEEDED PRIOR TO REMOVAL OF THE BASIN.
2. CONTACT NCDEQ - RALEIGH REGIONAL OFFICE (919) 791-4200 TO DETERMINE THE DIVISION OF ENERGY, MINERAL AND LAND RESOURCES CONTACT PERSON TO RECEIVE DEWATERING NOTIFICATIONS. AT LEAST 10 DAYS PRIOR TO BEGINNING DEWATERING ACTIVITY, SEND EMAIL TO NCDEQ-DEMLR CONTACT PERSON AND COPY ENVIRONMENTAL CONSULTANT THAT MET YOU ONSITE. THE EMAIL SHOULD INCLUDE: E&SC JURISDICTION: WAKE COUNTY, WAKE COUNTY PROJECT: NAME, NUMBER, AND LOCATION (CITY/TOWN), ENVIRONMENTAL CONSULTANT NAME, AND ADDRESS THE FOLLOWING: A) REASON FOR CONVERSION, B) BASIN #, C) DEWATERING METHOD, AND D) ALL OTHER NECESSARY INFO FROM PART II, SECTION G, ITEM 4 OF THE NCG01. KEEP EMAIL FOR YOUR NDPES MONITORING DOCUMENTATION
3. AFTER RECEIVING POSITIVE CONFIRMATION FROM NCDEQ-DEMLR THAT YOU MAY REMOVE THE BASIN OR ON ≥ DAY 11, WHICHEVER IS SOONER, REMOVE BASIN(S) AND ASSOCIATED TEMPORARY DIVERSION DITCHES. IF PIPES NEED TO BE EXTENDED, PERFORM THIS OPERATION AT THIS TIME. FINE GRADE AREA IN PREPARATION FOR SEEDING.
4. PERFORM SEEDBED PREPARATION, SEED, MULCH AND ANCHOR ANY RESULTING BARE AREAS IMMEDIATELY.
5. INSTALL VELOCITY DISSIPATORS AND/OR LEVEL SPREADERS AS REQUIRED ON THE EROSION CONTROL PLAN.
6. WHEN SITE IS FULLY STABILIZED, CALL ENVIRONMENTAL CONSULTANT FOR APPROVAL OF REMOVING REMAINING TEMPORARY EROSION CONTROL MEASURES AND ADVICE ON WHEN SITE CAN BE ISSUED A CERTIFICATE OF COMPLETION. NOTE: A MEETING SHOULD ALSO BE SCHEDULED WITH THE ENVIRONMENTAL CONSULTANT TO DETERMINE WHEN A BASIN MAY BE CONVERTED FOR STORMWATER USE. SOME MUNICIPALITIES MAY ALSO REQUIRE THIS.

Erosion Control Provisions:

1. NO PERSON MAY INITIATE A LAND DISTURBING ACTIVITY BEFORE NOTIFYING WAKE COUNTY WATERSHED MANAGEMENT OF THE DATE THAT THE LAND DISTURBING ACTIVITY WILL BEGIN.
2. LAND DISTURBING ACTIVITY BEYOND THAT REQUIRED TO INSTALL APPROPRIATE EROSION CONTROL MAY NOT PROCEED UNTIL EROSION CONTROL MEASURES ARE INSPECTED AND APPROVED BY THE ENGINEER.
3. SCHEDULING OF A PRE-CONSTRUCTION CONFERENCE WITH THE WAKE COUNTY WATERSHED MANAGER, JEEVAN NEUPANE, PE (919-819-8907) PRIOR TO INITIATING LAND DISTURBING ACTIVITIES IS REQUIRED. FOR INSPECTION CALL 919-819-8907. 48 HOUR NOTICE IS REQUIRED.
4. INSTALL TREE PROTECTION FENCING AROUND ALL AREAS OUTSIDE OF THE LIMITS OF DISTURBANCE AS SHOWN ON PLANS.
5. PROVIDE 20' X 50' X 6" STONE CONSTRUCTION ENTRANCES AS SHOWN ON PLAN.
6. SEED OR OTHERWISE PROVIDE GROUND COVER DEVICES OR STRUCTURES SUFFICIENT TO RESTRAIN EROSION FOR ALL EXPOSED SLOPES WITHIN 7 DAYS OF COMPLETION OF ANY PHASE OF GRADING ON PERIMETER AREAS AND SLOPES STEEPER THAN 3:1. ALL OTHER AREAS SHALL BE STABILIZED WITHIN 14 DAYS.
7. CONTRACTOR SHALL INSPECT AND MAINTAIN AS NEEDED ALL EROSION CONTROL DEVICES ON A WEEKLY BASIS AND AFTER EACH MAJOR STORM EVENT. FAILURE TO KEEP ALL EROSION CONTROL DEVICES IN PROPER WORKING ORDER MAY RESULT IN A STOP WORK ORDER OR CIVIL PENALTIES UP TO $5000.00 PER DAY OF VIOLATION.
8. THE ENGINEER RESERVES THE RIGHT TO REQUIRE ADDITIONAL EROSION CONTROL MEASURES SHOULD THE PLAN OR ITS IMPLEMENTATION PROVE TO BE INADEQUATE.
9. ACCEPTANCE AND APPROVAL OF THIS PLAN IS CONDITIONED UPON YOUR COMPLIANCE WITH FEDERAL AND STATE WATER QUALITY LAWS, REGULATION AND RULES. IN ADDITION LOCAL CITY AND COUNTY ORDINANCES OR RULES MAY ALSO APPLY TO THIS LAND DISTURBING ACTIVITY. APPROVAL BY THE COUNTY DOES NOT SUPERSEDE ANY OTHER PERMIT OR APPROVAL.
10. PLEASE BE ADVISED OF THE RULES TO PROTECT AND MAINTAIN EXISTING BUFFERS ALONG WATERCOURSES IN THE NEUSE AND RIVER BASIN. THESE RULES ARE ENFORCED BY THE DIVISION OF WATER RESOURCES (DWR). DIRECT ANY QUESTIONS ABOUT THE APPLICABILITY OF THESE RULES TO YOUR PROJECT TO THE REGIONAL WATER QUALITY SUPERVISOR, RALEIGH REGIONAL OFFICE AT (919) 791-4200.
11. ALL AREAS DOWNSTREAM OF TEMPORARY BASINS AND DITCHES ARE TO BE STABILIZED IMMEDIATELY UPON CONSTRUCTION.

Construction Sequence:

1. EROSION AND SEDIMENT CONTROL (E&SC) PERMIT AND A CERTIFICATE OF COVERAGE (COC) MUST BE OBTAINED BEFORE ANY LAND DISTURBING ACTIVITIES OCCUR.
2. CALL WAKE COUNTY WATERSHED MANAGER JEEVAN NEUPANE AT (919) 819-8907 A MINIMUM OF 48 HOURS IN ADVANCE TO SCHEDULE A PRE-CONSTRUCTION MEETING AND FOR NOTIFICATION OF PROJECT START UP.
3. ANY DEWATERING ON THE SITE SHALL BE DONE THROUGH A SILT BAG THAT IS CONSTANTLY MONITORED.
4. INSTALL GRAVEL CONSTRUCTION PAD, SILT FENCE, SEDIMENT BASINS OR OTHER MEASURES AS SHOWN ON THE APPROVED PLAN. CLEAR ONLY AS NECESSARY TO INSTALL THESE DEVICES. SEED TEMPORARY DIVERSIONS, BERMS AND BASINS IMMEDIATELY AFTER CONSTRUCTION.
5. CALL WATERSHED MANAGER, JEEVAN NEUPANE FOR AN ONSITE INSPECTION TO OBTAIN A CERTIFICATE OF COMPLIANCE.
6. CLEAR AND GRUB EXISTING VEGETATION AS SHOWN ON THE DEMOLITION PLAN. REMOVE EXISTING STRUCTURES AND UTILITIES AS SHOWN ON THE DEMOLITION PLAN. BEGIN GRADING. MAINTAIN DEVICES AS NEEDED. ROUGH GRADE SITE. INSTALL TEMPORARY SKIMMER SEDIMENT BASINS, ALONG WITH TEMPORARY DIVERSION DITCHES THAT SHALL BE INSTALLED TO ENSURE AS MUCH FLOW AS POSSIBLE IS DIRECTED TO THE BASINS.
7. SEDIMENT BASIN FOR PERMANENT USE AS WET POND SHALL BE REMOVED AS FOLLOWS: DEWATER (THROUGH SILT BAG), CLEAN SEDIMENT, AND REMOVE BAFFLES. RE-SHAPE THE BASIN AS REQUIRED BY THE DESIGN DRAWINGS, INCLUDING EXCAVATION/SHAPING OF THE FOREBAY. SEED AND STABILIZE BASIN SLOPES. DEWATERING OPERATIONS THROUGH SILT BAGS SHALL BE MONITORED CONTINUOUSLY.
8. STABILIZE SITE AS AREAS ARE BROUGHT UP TO FINISH GRADE WITH VEGETATION, DITCH LININGS, ETC. SEED AND MULCH DENUDED AREAS PER GROUND STABILIZATION TIME FRAME.
9. INSTALLATION OF UNDERGROUND UTILITIES AND STONE BASE FOR ROADWAYS.
10. INSTALLATION OF CONCRETE CURB & GUTTER, CONCRETE SIDEWALK, & ASPHALT PAVEMENT.
11. WHEN GRADING IS COMPLETE AND ALL AREAS ARE STABILIZED COMPLETELY, CALL WATERSHED MANAGER JEEVAN NEUPANE FOR INSPECTION.
12. IF SITE IS APPROVED, MAINTAIN TEMPORARY DIVERSIONS, SILT FENCE, SEDIMENT BASINS, ETC., AND SEED OR STABILIZE ANY RESULTING BARE AREAS. ALL REMAINING PERMANENT EROSION CONTROL DEVICES, SUCH AS VELOCITY DISSIPATERS, SHOULD NOW BE INSTALLED.
13. WHEN VEGETATION HAS BECOME ESTABLISHED, CALL FOR FINAL SITE INSPECTION BY THE WATERSHED MANAGER, JEEVAN NEUPANE. OBTAIN CERTIFICATE OF COMPLETION.

Seeding Specifications

NPDES Stormwater Discharge Permit for Construction Activities (NCGO1 - 4/1/19)
NCDEQ/Division of Energy, Mineral and Land Resources

Seedbed Preparation:

1. Chisel compacted areas and spread topsoil three inches deep over adverse soil conditions, if available.
2. Rip the entire area to six inches deep.
3. Remove all loose rock, roots and other obstructions, leaving surface reasonably smooth and uniform.
4. Apply agricultural lime, fertilizer and superphosphate uniformly and mix with soil (see mixture below).
5. Continue tillage until a well-pulverized, firm, reasonably uniform seedbed is prepared four to six inches deep.
6. Seed on a freshly prepared seedbed and cover seed lightly with seeding equipment or cultipack after seeding.
7. Mulch immediately after seeding and anchor mulch.
8. Inspect all seeded areas and make necessary repairs or reseedings within the planting season, if possible. If stand should be more than 60% damaged, re-establish following the original lime, fertilizer and seeding rates.
9. Consult Wake County Soil & Water or NC State Cooperative Extension on maintenance treatment and fertilization after permanent cover is established.

Mixture

Agricultural Limestone	2 tons/acre (3 tons/acre in clay soils)
Fertilizer	1,000 lbs/acre – 10-10-10
Superphosphate	500 lbs/acre – 20% analysis
Mulch	2 tons/acre – small grain straw
Anchor	Asphalt emulsion at 400 gals/acre

Seeding Schedule

For Shoulders, Side Ditches, Slopes (Max 3:1):

Date	Type	Planting Rate
Aug 15– Nov 1	Tall Fescue	300 lbs/acre
Nov 1– Mar 1	Tall Fescue & Abruzzi Rye	300 lbs/acre
Mar 1– Apr 15	Tall Fescue	300 lbs/acre
Apr 15– Jun 30	Hulled Common Bermudagrass	25 lbs/acre
Jul 1– Aug 15	Tall Fescue AND Browntop Millet or Sorghum-Sudan Hybrids***	125 lbs/acre (Tall Fescue); 35 lbs/acre (Browntop Millet); 30 lbs/acre (Sorghum-Sudan Hybrids)

For Shoulders, Side Ditches, Slopes (3:1 to 2:1):

Date	Type	Planting Rate
Mar 1– Jun 1	Sericea Lespedeza (scarified) and use the following combinations:	50 lbs/acre (Sericea Lespedeza);
Mar 1– Apr 15	Add Tall Fescue	120 lbs/acre
Mar 1– Jun 30	Or add Weeping Love grass	10 lbs/acre
Mar 1– Jun 30	Or add Hulled Common Bermudagrass	25 lbs/acre
Jun 1– Sept 1	Tall Fescue AND Browntop Mullet or Sorghum-Sudan Hybrids***	120 lbs/acre (Tall Fescue); 35 lbs/acre (Browntop Mullet); 30 lbs/acre (Sorghum-Sudan Hybrids)
Sept 1– Mar 1	Sericea Lespedeza (unhulled – unscarified) AND Tall Fescue	70 lbs/acre (Sericea Lespedeza); 120 lbs/acre (Tall Fescue)
Nov 1– Mar 1	AND Abruzzi Rye	25 lbs/acre

Consult Wake County Soil & Water Conservation District or NC State Cooperative Extension for additional information concerning other alternatives for vegetation of denuded areas. The above vegetation rates are those that do well under local conditions; other seeding rate combinations are possible.

*** **TEMPORARY**: Reseed according to optimum season for desired permanent vegetation. Do not allow temporary cover to grow more than 12" in height before mowing; otherwise, fescue may be shaded out.

#	DATE	DESCRIPTION
1	2-JAN-25	INITIAL SUBMITTAL FOR REVIEW

REVISIONS:

EROSION CONTROL NOTES

HALL OF FAME CAR WASH
WALLBROOK - LOT 8
Town of Rolesville Project No. SDP 25-01
US 401 Business / S. Main Street & Wall Creek Drive
Wake Forest Township, Town of Rolesville, Wake County, North Carolina

NC License: P-1199
ARK CONSULTING GROUP, PLLC
ENGINEERS & SURVEYORS
925-A Conference Drive
Greenville, NC 27858
(252) 558-0888
www.arkconsultinggroup.com

NORTH CAROLINA PROFESSIONAL SEAL 041670 ENGINEER BRIAN C. FAGUNDUS
PRELIMINARY Do Not Use for Construction
1/2/2025

Project Manager:	BCF
Drawn By:	DLC
Checked By:	TGN
Project Number:	24137
Drawing Number:	D-1525

C1.0

Date: January 2, 2025

D:\ARK DROPBOX\01 – PROJECTS\ACTIVE\CROSLAND SE\24137 – WALLBROOK – LOT 8\D – DWG\03 – FINAL\D-1525 – EC_LOT8.DWG, 1.0 – EC Note, Lee Christman, Fri, Jan 03, 2025 @ 4:59 PM

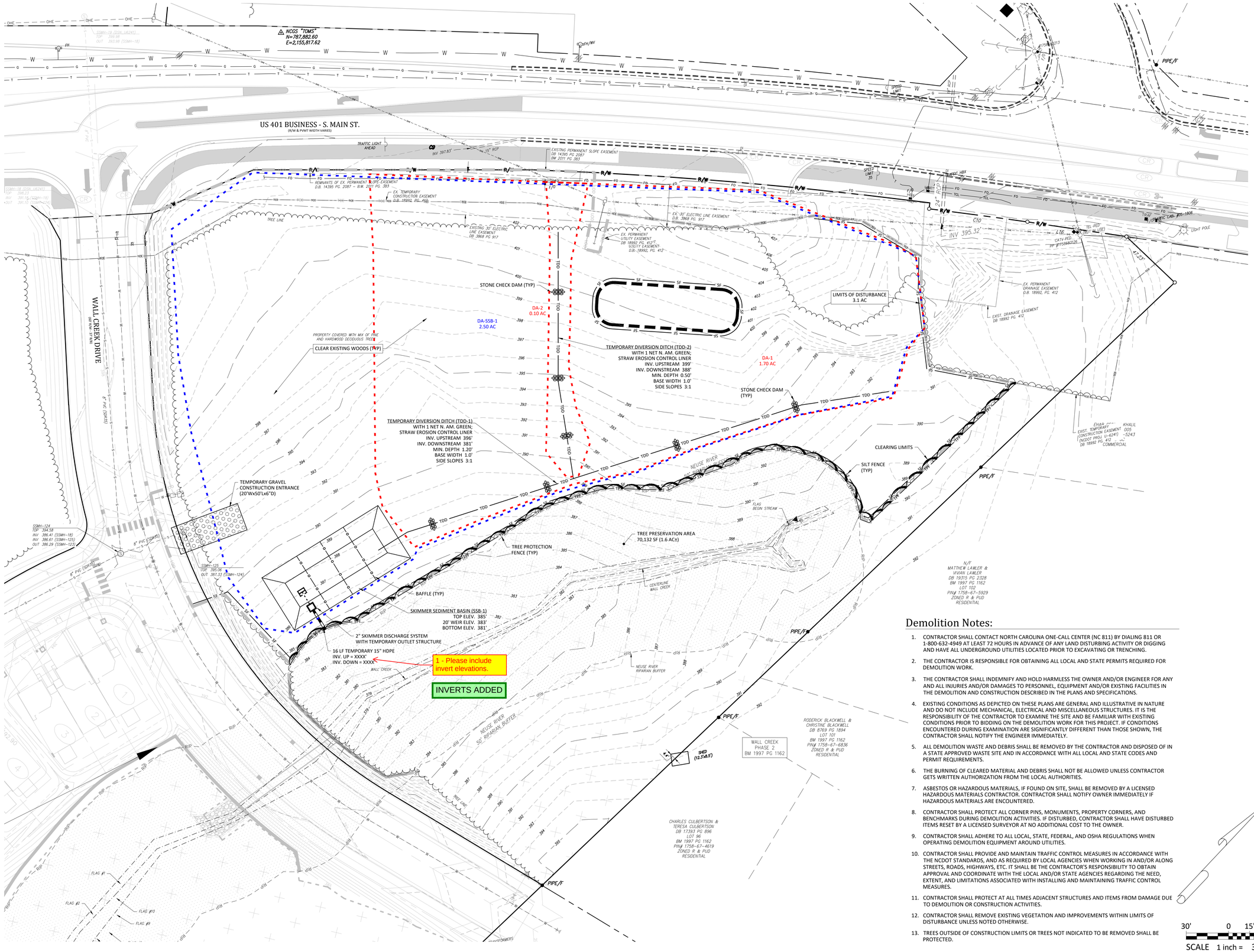

Demolition Notes:

1. CONTRACTOR SHALL CONTACT NORTH CAROLINA ONE-CALL CENTER (NC 811) BY DIALING 811 OR 1-800-632-4949 AT LEAST 72 HOURS IN ADVANCE OF ANY LAND DISTURBING ACTIVITY OR DIGGING AND HAVE ALL UNDERGROUND UTILITIES LOCATED PRIOR TO EXCAVATING OR TRENCHING.
2. THE CONTRACTOR IS RESPONSIBLE FOR OBTAINING ALL LOCAL AND STATE PERMITS REQUIRED FOR DEMOLITION WORK.
3. THE CONTRACTOR SHALL INDEMNIFY AND HOLD HARMLESS THE OWNER AND/OR ENGINEER FOR ANY AND ALL INJURIES AND/OR DAMAGES TO PERSONNEL, EQUIPMENT AND/OR EXISTING FACILITIES IN THE DEMOLITION AND CONSTRUCTION DESCRIBED IN THE PLANS AND SPECIFICATIONS.
4. EXISTING CONDITIONS AS DEPICTED ON THESE PLANS ARE GENERAL AND ILLUSTRATIVE IN NATURE AND DO NOT INCLUDE MECHANICAL, ELECTRICAL AND MISCELLANEOUS STRUCTURES. IT IS THE RESPONSIBILITY OF THE CONTRACTOR TO EXAMINE THE SITE AND BE FAMILIAR WITH EXISTING CONDITIONS PRIOR TO BIDDING ON THE DEMOLITION WORK FOR THIS PROJECT. IF CONDITIONS ENCOUNTERED DURING EXAMINATION ARE SIGNIFICANTLY DIFFERENT THAN THOSE SHOWN, THE CONTRACTOR SHALL NOTIFY THE ENGINEER IMMEDIATELY.
5. ALL DEMOLITION WASTE AND DEBRIS SHALL BE REMOVED BY THE CONTRACTOR AND DISPOSED OF IN A STATE APPROVED WASTE SITE AND IN ACCORDANCE WITH ALL LOCAL AND STATE CODES AND PERMIT REQUIREMENTS.
6. THE BURNING OF CLEARED MATERIAL AND DEBRIS SHALL NOT BE ALLOWED UNLESS CONTRACTOR GETS WRITTEN AUTHORIZATION FROM THE LOCAL AUTHORITIES.
7. ASBESTOS OR HAZARDOUS MATERIALS, IF FOUND ON SITE, SHALL BE REMOVED BY A LICENSED HAZARDOUS MATERIALS CONTRACTOR. CONTRACTOR SHALL NOTIFY OWNER IMMEDIATELY IF HAZARDOUS MATERIALS ARE ENCOUNTERED.
8. CONTRACTOR SHALL PROTECT ALL CORNER PINS, MONUMENTS, PROPERTY CORNERS, AND BENCHMARKS DURING DEMOLITION ACTIVITIES. IF DISTURBED, CONTRACTOR SHALL HAVE DISTURBED ITEMS RESET BY A LICENSED SURVEYOR AT NO ADDITIONAL COST TO THE OWNER.
9. CONTRACTOR SHALL ADHERE TO ALL LOCAL, STATE, FEDERAL, AND OSHA REGULATIONS WHEN OPERATING DEMOLITION EQUIPMENT AROUND UTILITIES.
10. CONTRACTOR SHALL PROVIDE AND MAINTAIN TRAFFIC CONTROL MEASURES IN ACCORDANCE WITH THE NCDOT STANDARDS, AND AS REQUIRED BY LOCAL AGENCIES WHEN WORKING IN AND/OR ALONG STREETS, ROADS, HIGHWAYS, ETC. IT SHALL BE THE CONTRACTOR'S RESPONSIBILITY TO OBTAIN APPROVAL AND COORDINATE WITH THE LOCAL AND/OR STATE AGENCIES REGARDING THE NEED, EXTENT, AND LIMITATIONS ASSOCIATED WITH INSTALLING AND MAINTAINING TRAFFIC CONTROL MEASURES.
11. CONTRACTOR SHALL PROTECT AT ALL TIMES ADJACENT STRUCTURES AND ITEMS FROM DAMAGE DUE TO DEMOLITION OR CONSTRUCTION ACTIVITIES.
12. CONTRACTOR SHALL REMOVE EXISTING VEGETATION AND IMPROVEMENTS WITHIN LIMITS OF DISTURBANCE UNLESS NOTED OTHERWISE.
13. TREES OUTSIDE OF CONSTRUCTION LIMITS OR TREES NOT INDICATED TO BE REMOVED SHALL BE PROTECTED.

KNOW WHAT'S BELOW
CALL BEFORE YOU DIG!
1-800-632-4949
WWW.NC811.ORG

#	DATE	DESCRIPTION
1	2-JAN-25	INITIAL SUBMITTAL FOR REVIEW

REVISIONS:

EROSION CONTROL PLAN - PHASE 1

HALL OF FAME CAR WASH

WALLBROOK - LOT 8

Town of Rolesville Project No. SDP 25-01
US 401 Business / S. Main Street & Wall Creek Drive
Wake Forest Township, Town of Rolesville, Wake County, North Carolina

ARK CONSULTING GROUP PLLC
ENGINEERS & SURVEYORS
NC License: P-1199
925-A Conference Drive
Greenville, NC 27858
(252) 558-0888
www.arkconsultinggroup.com

NORTH CAROLINA PROFESSIONAL ENGINEER SEAL 049124 BRIAN C. FAGUNDES
PRELIMINARY NOT FOR CONSTRUCTION
1/2/2025

Project Manager:	BCF
Drawn By:	DLC
Checked By:	TGN
Project Number:	24137
Drawing Number:	D-1525

C1.1

Date: January 2, 2025

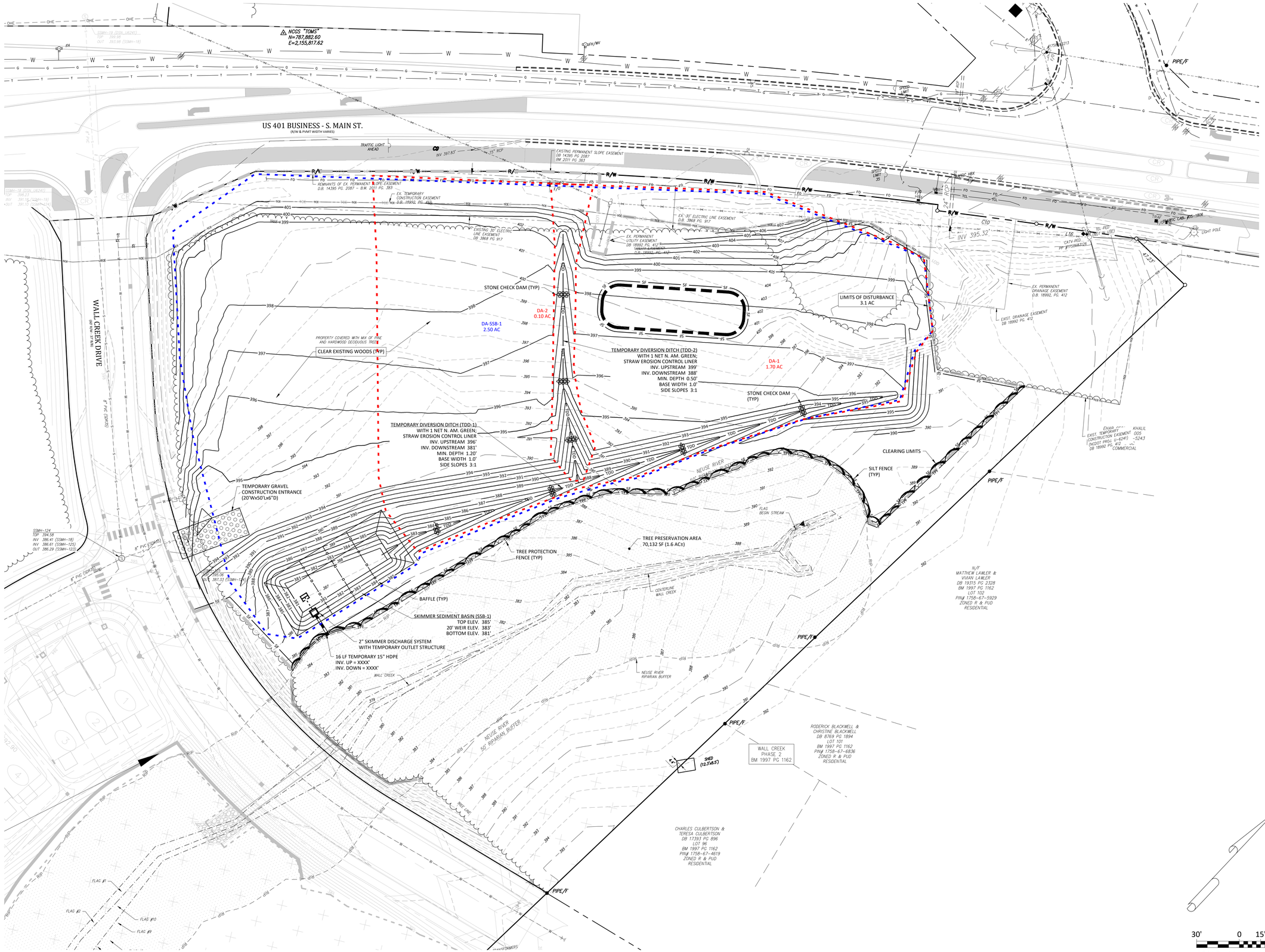

KNOW WHAT'S BELOW
CALL BEFORE YOU DIG!
1-800-632-4949
WWW.NC811.ORG

#	DATE	DESCRIPTION
1	2-JAN-25	INITIAL SUBMITTAL FOR REVIEW

REVISIONS:

EROSION CONTROL PLAN - PHASE 2

HALL OF FAME CAR WASH

WALLBROOK - LOT 8

Town of Rolesville Project No. SDP 25-01
US 401 Business / S. Main Street & Wall Creek Drive
Wake Forest Township, Town of Rolesville, Wake County, North Carolina

NC License: P-1199
ARK CONSULTING GROUP PLLC
ENGINEERS & SURVEYORS
925-A Conference Drive
Greenville, NC 27858
(252) 558-0888
www.arkconsultinggroup.com

NORTH CAROLINA PROFESSIONAL ENGINEER SEAL 049124 BRIAN CHRISTOPHER FAGUNDES
PRELIMINARY NOT FOR CONSTRUCTION
1/2/2025

Project Manager:	BCF
Drawn By:	DLC
Checked By:	TGN
Project Number:	24137
Drawing Number:	D-1525

C1.2

Date: January 2, 2025

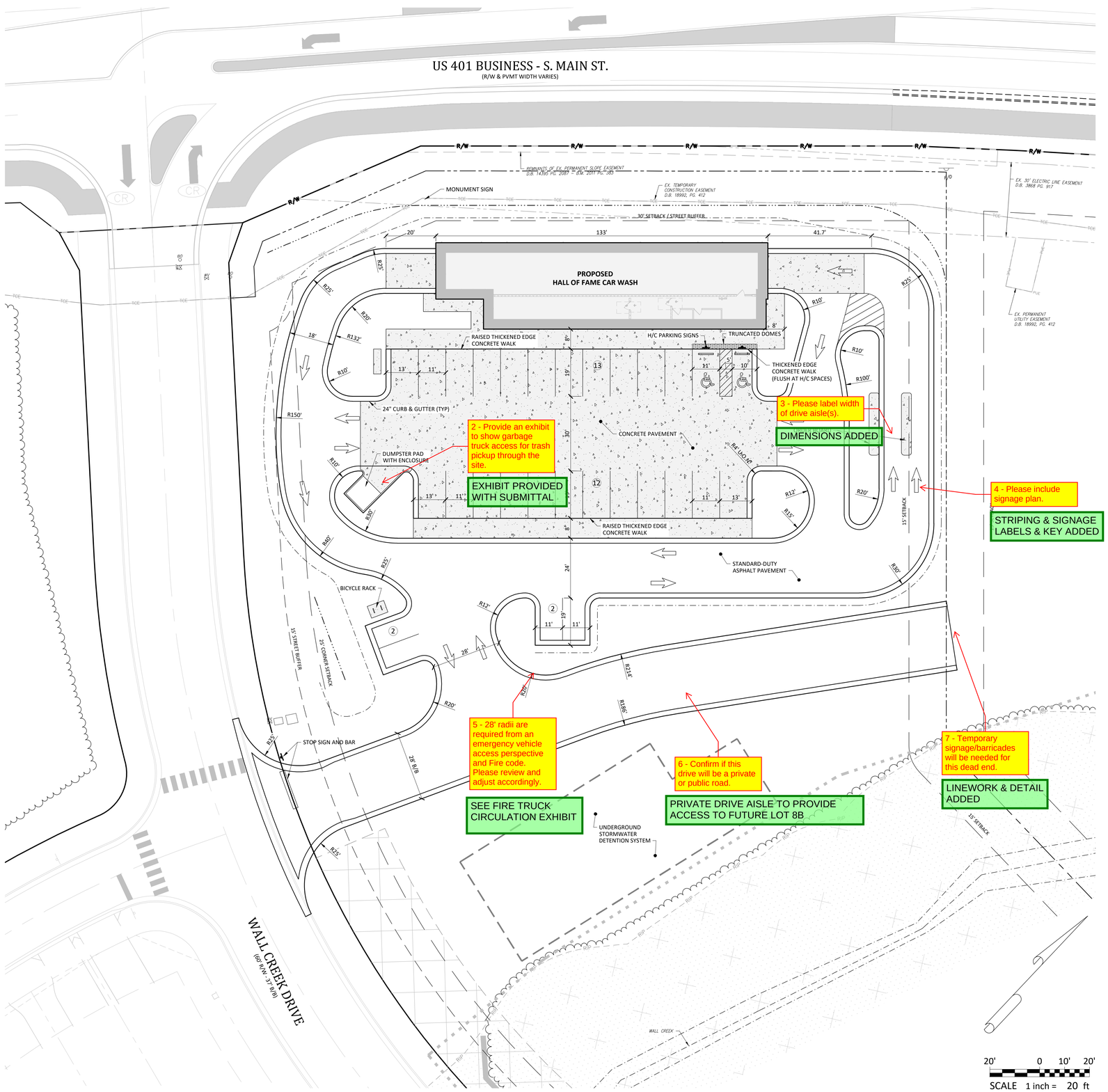

General Notes:

1. THE FOLLOWING DOCUMENTS ARE INCORPORATED BY REFERENCE AS PART OF THIS SITE PLAN:
   - ALTA/NSPS LAND TITLE SURVEY, PREPARED BY JOHNSON, MIRMIRAN & THOMPSON FOR WALLBROOK LANDCO, LLC, DATED REVISED OCTOBER 1, 2020
   - "REPORT OF SUBSURFACE EXPLORATION AND GEOTECHNICAL ENGINEERING EVALUATION - ROLESVILLE SITE" PREPARED BY TERRATECH ENGINEERS, INC., DATED NOVEMBER 26, 2018
   - "REVISED WALLBROOK DEVELOPMENT TRAFFIC IMPACT ANALYSIS" PREPARED BY STANTEC CONSULTING SERVICES, INC., DATED AUGUST 11, 2020
2. ALL ACCESSIBLE PARKING SPACES SHALL BE CONSTRUCTED TO MEET, AT A MINIMUM, THE MORE STRINGENT OF THE REQUIREMENTS OF THE "AMERICANS WITH DISABILITIES ACT" (ADA) CODE OR THE REQUIREMENTS OF THE JURISDICTION WHERE THIS PROJECT IS TO BE CONSTRUCTED.
3. THIS PROPERTY IS LOCATED IN FLOOD ZONE 'X', AREA DETERMINED TO BE OUTSIDE OF THE 0.2% ANNUAL CHANCE FLOODPLAIN, AS SHOWN ON NATIONAL FLOOD INSURANCE RATE MAP (FIRM) 3720175800K, EFFECTIVE DATE: JULY 19, 2022.
4. PRIOR TO STARTING CONSTRUCTION, THE CONTRACTOR SHALL BE RESPONSIBLE TO ENSURE THAT ALL REQUIRED PERMITS AND APPROVALS HAVE BEEN OBTAINED. NO CONSTRUCTION OR FABRICATION SHALL BEGIN UNTIL THE CONTRACTOR HAS RECEIVED AND THOROUGHLY REVIEWED THE COMMENTS TO ALL PLANS AND OTHER DOCUMENTS REVIEWED AND APPROVED BY THE PERMITTING AUTHORITIES. CONTRACTOR SHALL HAVE COPIES OF ALL PERMITS AND APPROVALS ON SITE AT ALL TIMES.
5. THE OWNER / CONTRACTOR SHALL BE FAMILIAR WITH AND RESPONSIBLE FOR THE PROCUREMENT OF ANY AND ALL CERTIFICATIONS REQUIRED FOR THE ISSUANCE OF A CERTIFICATE OF OCCUPANCY.
6. ALL WORK SHALL BE PERFORMED IN ACCORDANCE WITH THESE PLANS AND SPECIFICATIONS AND ALL APPLICABLE REQUIREMENTS AND STANDARDS OF ALL GOVERNMENTAL ENTITIES HAVING JURISDICTION OVER THIS PROJECT.
7. THE GEOTECHNICAL REPORT AND RECOMMENDATIONS SET FORTH HEREIN ARE PART OF THE REQUIRED CONSTRUCTION DOCUMENTS, AND, IN CASE OF CONFLICT, SHALL TAKE PRECEDENCE UNLESS SPECIFICALLY NOTED OTHERWISE ON THE PLANS. THE CONTRACTOR SHALL NOTIFY THE ENGINEER IN WRITING OF ANY SUCH DISCREPANCY BETWEEN THE GEOTECHNICAL REPORTS AND PLANS AND SPECIFICATIONS PRIOR TO PROCEEDING WITH ANY FURTHER WORK.
8. THESE PLANS ARE BASED ON INFORMATION PROVIDED TO ARK CONSULTING GROUP, PLLC BY THE OWNER AND OTHERS PRIOR TO THE TIME OF PLAN PREPARATION. CONTRACTOR SHALL FIELD VERIFY EXISTING CONDITIONS AND NOTIFY ARK CONSULTING GROUP, PLLC IF ACTUAL SITE CONDITIONS DIFFER FROM THOSE SHOWN ON THE PLAN, OR IF THE PROPOSED WORK CONFLICTS WITH ANY OTHER ONSITE FEATURES.
9. ALL DIMENSIONS SHOWN ON THE PLANS SHALL BE FIELD VERIFIED BY THE CONTRACTOR PRIOR TO THE START OF CONSTRUCTION. CONTRACTOR SHALL NOTIFY ENGINEER IN WRITING IF ANY DISCREPANCIES EXIST PRIOR TO PROCEEDING WITH CONSTRUCTION. NO EXTRA COMPENSATION SHALL BE PAID TO THE CONTRACTOR FOR WORK HAVING TO BE REDONE DUE TO DIMENSIONS AND GRADES SHOWN INCORRECTLY ON THESE PLANS PRIOR TO THE GIVING OF SUCH NOTIFICATION AND THE ENGINEER'S WRITTEN AUTHORIZATION OF SUCH ADDITIONAL WORK.
10. CONTRACTOR SHALL REFER TO THE ARCHITECTURAL / BUILDING PLANS FOR EXACT LOCATIONS AND DIMENSIONS OF ENTRY / EXIT POINTS, ELEVATIONS, PRECISE BUILDING DIMENSIONS, AND EXACT BUILDING UTILITY LOCATIONS.
11. PRIOR TO THE START OF CONSTRUCTION, THE CONTRACTOR SHALL COORDINATE THE BUILDING LAYOUT BY CAREFUL REVIEW OF THE SITE PLAN AND LATEST ARCHITECTURAL PLANS (INCLUDING, BUT NOT LIMITED TO, STRUCTURAL, MECHANICAL, ELECTRICAL, PLUMBING AND FIRE SUPPRESSION PLAN, WHERE APPLICABLE). CONTRACTOR SHALL IMMEDIATELY NOTIFY OWNER, ARCHITECT AND SITE ENGINEER OF ANY DISCREPANCIES.
12. THE CONTRACTOR IS RESPONSIBLE FOR REPAIRING ANY DAMAGE DONE TO ANY NEW OR EXISTING CONSTRUCTION OR PROPERTY DURING THE COURSE OF CONSTRUCTION, INCLUDING, BUT NOT LIMITED TO, DRAINAGE, UTILITIES, PAVEMENT, STRIPING, CURB & GUTTER. CONTRACTOR SHALL BE RESPONSIBLE FOR AND SHALL REPLACE ALL SIGNAL INTERCONNECTION CABLE, WIRING CONDUITS, AND ANY UNDERGROUND ACCESSORY EQUIPMENT DAMAGED DURING CONSTRUCTION. THE REPAIR OF ANY SUCH NEW OR EXISTING CONSTRUCTION OR PROPERTY SHALL RESTORE SUCH CONNECTION OR PROPERTY TO A CONDITION EQUIVALENT TO OR BETTER THAN THE EXISTING CONDITIONS, AND IN CONFORMANCE WITH APPLICABLE CODES. CONTRACTOR IS RESPONSIBLE TO DOCUMENT ALL EXISTING DAMAGE AND NOTIFY THE OWNER'S REPRESENTATIVE PRIOR TO THE START OF CONSTRUCTION.
13. THE ENGINEER IS NOT RESPONSIBLE FOR CONSTRUCTION MEANS AND METHODS, NOR IS THE ENGINEER RESPONSIBLE FOR ANY CONFLICTS OR SCOPE REVISIONS WHICH RESULT FROM THE SAME. THE CONTRACTOR IS RESPONSIBLE FOR DETERMINING THE MEANS AND METHODS FOR COMPLETION OF THE WORK PRIOR TO THE COMMENCEMENT OF CONSTRUCTION.

5. **Non-Residential Open Space** - Demonstrate that the open space requirement of a non-residential development has been met per LDO Section 6.2.1.D.3. Provide reference to the LDO Section 6.8.4.B.2 of pedestrian amenities being provided (min. 4). Replicate Compliance demonstration as the parking requirements breakdown on sheet C0.1.

OPEN SPACE MET AS PART OF OVERALL WALLBROOK DEVELOPMENT
REFER TO SCREENSHOT BELOW OF APPROVED PR 21-04 REVISED

OPEN SPACE CALCULATIONS:

REQUIRED
NON-RESIDENTIAL - 25-50 ACRES = 5% OF DEVELOPMENT AREA
69.38 - 24.27 (LOT 6) - 2.84 (R/W) = 42.27 AC = DEVELOPMENT AREA
42.27 x 0.05 = 2.11 AC
TO BE COMPRISED OF 1 SMALL & 1 MEDIUM AREA

PROVIDED
1.36 AC = LOTS 1A, 1B, 3, 4, 5, 7, 8, 10, 11 - GREENWAY - (MEDIUM - 59,104 SF)
0.22 AC = LOT 8 - LINEAR PARK (MEDIUM - RIPARIAN AREA)
0.60 AC = LOT 8 - LINEAR PARK (MEDIUM - 26,261 SF)
0.33 AC = LOTS 1A/1B - PLAZA (SMALL - 14,500 SF)
2.51 AC

PEDESTRIAN AMENITIES ADDED CALLED OUT ON SITE PLAN AND TABLE ON COVER AS REQUESTED

6. **Trash Enclosure Screening/Sheet C5.0** – Provide demonstration of compliance with LDO 6.2.4.6.B. screening requirements; provide 'typical' enclosure drawings.

CALLOUT UPDATED TO INDICATE INTENT FOR SCREENING COMPLIANCE. TYPICAL ENCLOSURE DRAWINGS HAVE BEEN REQUESTED FROM ARCHITECT, AND WILL BE PROVIDED AS SOON AS RECEIVED.

8. **Concrete Walks** – Widths of the raised thickened edge concrete walk should be shown. If this area is proposed to contain vacuum stations, those should also be shown as this is a constructable plan set.

DIMENSIONS INDICATING SIDEWALK WIDTH ARE INCLUDED ON THE PLANS. VACUUM STATIONS ADDED.

#	DATE	DESCRIPTION
1	2-JAN-25	INITIAL SUBMITTAL FOR REVIEW

REVISIONS:

SITE PLAN

HALL OF FAME CAR WASH

WALLBROOK - LOT 8
Town of Rolesville Project No. SDP 25-01
US 401 Business / S. Main Street & Wall Creek Drive
Wake Forest Township, Town of Rolesville, Wake County, North Carolina

NC License: P-1199
ARK CONSULTING GROUP PLLC
ENGINEERS & SURVEYORS
925-A Conference Drive
Greenville, NC 27858
(252) 558-0888
www.arkconsultinggroup.com

PRELIMINARY NOT FOR CONSTRUCTION
1/2/2025

Project Manager:	BCF
Drawn By:	DLC
Checked By:	TGN
Project Number:	24137
Drawing Number:	D-1525

C2.0

Date: January 2, 2025

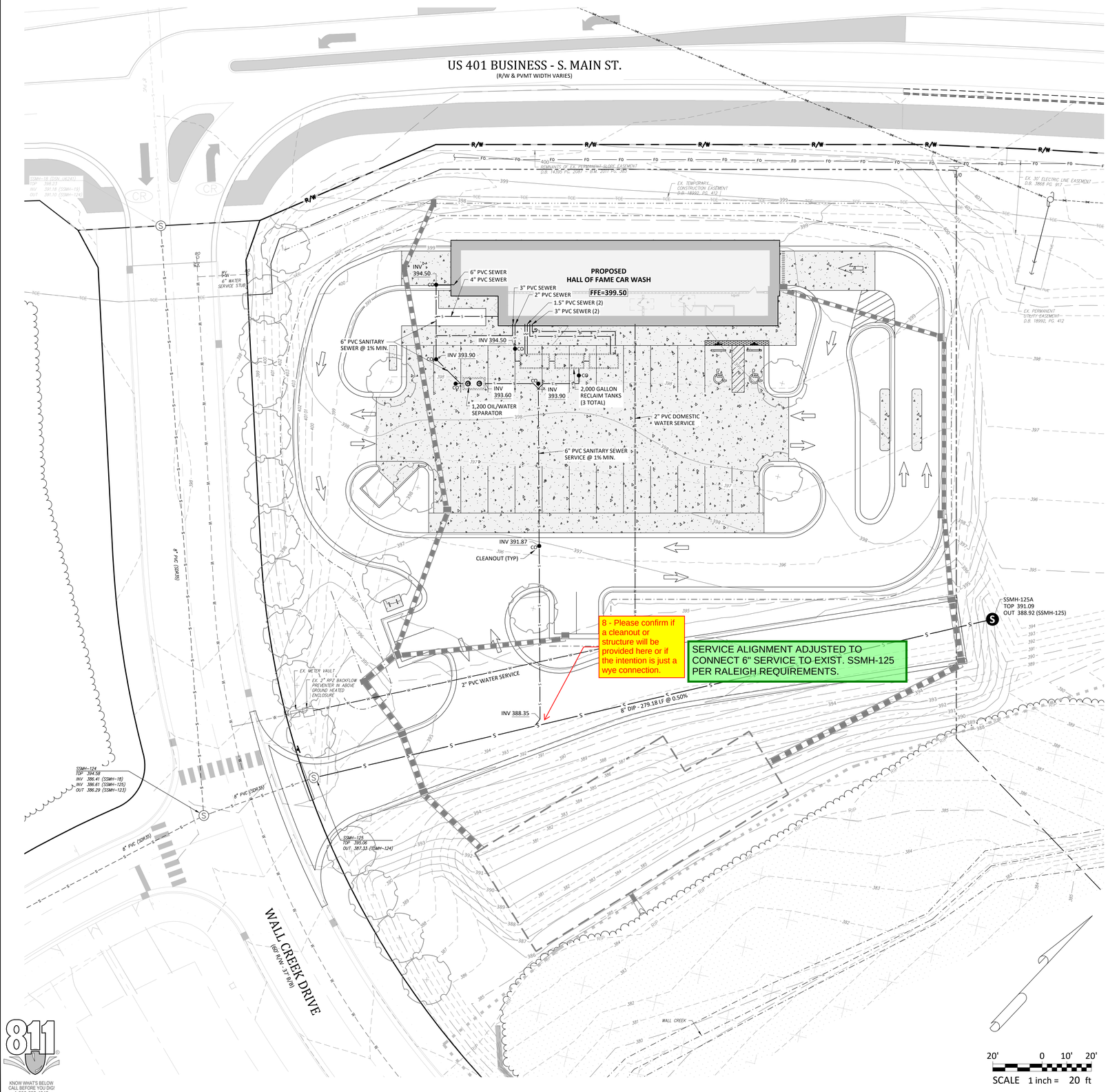

8 - Please confirm if a cleanout or structure will be provided here or if the intention is just a wye connection.

SERVICE ALIGNMENT ADJUSTED TO CONNECT 6" SERVICE TO EXIST. SSMH-125 PER RALEIGH REQUIREMENTS.

KNOW WHAT'S BELOW
CALL BEFORE YOU DIG!
1-800-632-4949
WWW.NC811.ORG

CORPUD Standard Utility Notes:

1. ALL MATERIALS & CONSTRUCTION METHODS SHALL BE IN ACCORDANCE WITH CITY OF RALEIGH DESIGN STANDARDS, DETAILS & SPECIFICATIONS (REFERENCE: CORPUD HANDBOOK)
2. UTILITY SEPARATION REQUIREMENTS:
   a) A DISTANCE OF 100' SHALL BE MAINTAINED BETWEEN SANITARY SEWER & ANY PRIVATE OR PUBLIC WATER SUPPLY SOURCE SUCH AS AN IMPOUNDED RESERVOIR USED AS A SOURCE OF DRINKING WATER. IF ADEQUATE LATER SEPARATION CANNOT BE ACHIEVED, FERROUS SANITARY SEWER PIPE SHALL BE SPECIFIED & INSTALLED TO WATERLINE SPECIFICATIONS. HOWEVER, THE MINIMUM SEPARATION SHALL NOT BE LESS THAN 25' FROM A PRIVATE WELL OR 50' FROM A PUBLIC WELL.
   b) WHEN INSTALLING WATER &/OR SEWER MAINS, THE HORIZONTAL SEPARATION BETWEEN UTILITIES SHALL BE 10'. IF THIS SEPARATION CONNOT BE MAINTAINED DUE TO EXISTING CONDITIONS, THE VARIATION ALLOWED IS THE WATER MAIN IN A SEPARATE TRENCH WITH THE ELEVATION OF THE WATER MAIN AT LEAST 18" ABOVE THE TOP OF THE SEWER & MUST BE APPROVED BY THE PUBLIC UTILITIES DIRECTOR.
   c) WHERE IT IS IMPOSSIBLE TO OBTAIN PROPER SEPARATION, OR ANYTIME A SANITARY SEWER PASSES OVER A WATER MAIN, DIP MATERIALS OR STEEL ENCASEMENT EXTENDED 10' ON EACH SIDE OF CROSSING MUST BE SPECIFIED & INSTALLED TO WATERLINE SPECIFICATIONS.
   d) 5.0' MINIMUM HORIZONTAL SEPARATION IS REQUIRED BETWEEN ALL SANITARY SEWER & STORM SEWER FACILITIES, UNLESS DIP MATERIAL IS SPECIFIED FOR SANITARY SEWER.
   e) MAINTAIN 18" MIN. VERTICAL SEPARATION AT ALL WATER MAIN & RCP STORM DRAIN CROSSINGS; MAINTAIN 24" MIN. VERTICAL SEPARATION AT ALL SANITARY SEWER & RCP STORM DRAIN CROSSINGS. WHERE ADEQUATE SEPARATIONS CANNOT BE ACHIEVED, SPECIFY DIP MATERIALS & A CONCRETE CRADLE HAVING 6" MIN. CLEARANCE (PER CORPUD DETAILS W-41 & S-49).
   f) ALL OTHER UNDERGROUND UTILITIES SHALL CROSS WATER & SEWER FACILITIES WITH 18" MIN. VERTICAL SEPARATION REQUIRED.
3. ANY NECESSARY FIELD REVISIONS ARE SUBJECT TO REVIEW & APPROVAL OF AN AMENDED PLAN &/OR PROFILE BY CORPUD PRIOR TO CONSTRUCTION.
4. CONTRACTOR SHALL MAINTAIN CONTINUOUS WATER & SEWER SERVICE TO EXISTING RESIDENCES & BUSINESSES THROUGHOUT CONSTRUCTION OF PROJECT. ANY NECESSARY SERVICE INTERRUPTIONS SHALL BE PRECEDED BY A 24 HOUR ADVANCE NOTICE TO CORPUD.
5. 3.0' MINIMUM COVER IS REQUIRED ON ALL WATER MAINS & SEWER FORCEMAINS. 4.0' MINIMUM COVER IS REQUIRED ON ALL REUSE MAINS.
6. IT IS THE DEVELOPERS RESPONSIBILITY TO ABANDON OR REMOVE EXISTING WATER & SEWER SERVICES NOT BEING USED IN REDEVELOPMENT OF A SITE UNLESS OTHERWISE DIRECTED BY CORPUD. THIS INCLUDES ABANDONING TAP AT MAIN & REMOVAL OF SERVIC FROM ROW OR EASEMENT PER CORPUD HANDBOOK PROCEDURE.
7. INSTALL PVC WATER SERVICES WITH METERS LOCATED AT ROW OR WITHIN A 2' X 2' WATERLINE EASEMENT IMMEDIATELY ADJACENT.
8. INSTALL PVC SEWER SERVICES @ 1.0% MINIMUM GRADE WITH CLEANOUTS LOCATED AT ROW OR EASEMENT LINE & SPACED EVERY 75 LINEAR FEET MAXIMUM.
9. PRESSURE REDUCING VALVES ARE REQUIRED ON ALL WATER SERVICES EXCEEDING 80 PSI; BACKWATER VALVES ARE REQUIRED ON ALL SANITARY SEWER SERVICES HAVING BUILDING DRAINS LOWER THAN 1.0' ABOVE THE NEXT UPSTREAM MANHOLE.
10. ALL ENVIRONMENTAL PERMITS APPLICABLE TO THE PROJECT MUST BE OBTAINED FROM NCDWQ, USACE &/OR FEMA FOR ANY RIPARIAN BUFFER, WETLAND &/OR FLOODPLAIN IMPACTS PRIOR TO CONSTRUCTION.
11. NCDOT / RAILROAD ENCROACHMENT AGREEMENTS ARE REQUIRED FOR ANY UTILITY WORK (INCLUDING MAIN EXTENSIONS & SERVICE TAPS) WITHIN STATE OR RAILROAD ROW PRIOR TO CONSTRUCTION.
12. GREASE INTERCEPTOR / OIL WATER SEPARATOR SIZING CALCULATIONS & INSTALLATION SPECIFICATIONS SHALL BE APPROVED BY THE CORPUD FOG PROGRAM COORDINATOR PRIOR TO ISSUANCE OF A BUILDING PERMIT. CONTACT TIM BEASLEY AT (919) 996-2334 OR TIMOTHY.BEASLEY@RALEIGHNC.GOV FOR MORE INFORMATION.
13. CROSS-CONNECTION CONTROL PROTECTION DEVICES ARE REQUIRED BASED ON DEGREE OF HEALTH HAZARD INVOLVED AS LISTED IN APPENDIX-B OF THE RULES GOVERNING PUBLIC WATER SYSTEMS IN NC. THESE GUIDELINES ARE THE MINIMUM REQUIREMENTS. THE DEVICES SHALL MEET AMERICAN SOCIETY SANITARY ENGINEERING (ASSE) STANDARDS OR BE ON THE UNIVERSITY OF SOUTHERN CALIFORNIA APPROVAL LIST. THE DEVICES SHALL BE INSTALLED AND TESTED (BOTH INITIAL AND PERIODIC TESTING THEREAFTER) IN ACCORDANCE WITH THE MANUFACTURERS RECOMMENDATIONS OR THE LOCAL CROSS-CONNECTION CONTROL PROGRAM, WHICHEVER IS MORE STRINGENT. CONTACT JOANIE HARTLEY AT (919) 996-5923 OR JOANIE.HARTLEY@RALEIGHNC.GOV FOR MORE INFORMATION.

COR Public Utilities - Tim Beasley	1. When will the public sewer extension be permitted that was shown on the PSP? If the intention is to permit the extension with this SDP, show Proposed Easement around the SS extension, provide plan/profile sheets, add/include the public Sewer permit block on the applicable sheets. 2. Are the meter vault and BFP existing or are they being constructed/installed with this SDP? What size is the water meter? Please provide size, make and model # for the BFP. 3. Please show City of Raleigh Waterline Easement extended from the R/W, 1' on each side of the meter vault. 4. The 6" sanitary sewer service must connect to the sanitary sewer main at a manhole. 5. Email for the public improvements quantities table that will need to be included on the Cover.

1) INTENT IS TO PERMIT WITH THIS SDP. PLAN PROFILE SHEETS ADDED
2) METER VAULT & BFP ALREADY INSTALLED VIA TOWNHOME PROJECT
   BFP = 2" ZURN 975XL2U
3) WATER EASEMENT ADDED
4) NOTED - SEWER SERVICE RE-ALIGNED TO CONNECT TO EXIST. SSMH-125.
5) QUANTITIES TABLE ADDED TO COVER

ATTENTION CONTRACTORS

The ***Construction Contractor*** responsible for the extension of water, sewer, and/or reuse, as approved in these plans, is responsible for ***contacting*** the ***Public Utilities Department*** at ***(919) 996-4540*** at least ***twenty four hours*** prior to beginning any of their construction.

Failure to notify both ***City Departments*** in advance of beginning construction, will result in the issuance of ***monetary fines***, and require reinstallation of any water or sewer facilities not inspected as a result of this notification failure.

Failure to call for ***Inspection***, ***Install a Downstream Plug***, have ***Permitted Plans*** on the ***Jobsite***, or any other ***Violation*** of ***City of Raleigh Standards*** will result in a ***Fine and Possible Exclusion*** from future work in the ***City of Raleigh***.

#	DATE	DESCRIPTION
1	2-JAN-25	INITIAL SUBMITTAL FOR REVIEW

REVISIONS:

UTILITY PLAN

HALL OF FAME CAR WASH

WALLBROOK - LOT 8
Town of Rolesville Project No. SDP 25-01
US 401 Business / S. Main Street & Wall Creek Drive
Wake Forest Township, Town of Rolesville, Wake County, North Carolina

NC License: P-1199
ARK CONSULTING GROUP PLLC
ENGINEERS & SURVEYORS
925-A Conference Drive
Greenville, NC 27858
(252) 558-0888
www.arkconsultinggroup.com

NORTH CAROLINA PROFESSIONAL SEAL ENGINEER NO. 045324 BRIAN CHARLES FAGUNDES
PRELIMINARY NOT FOR CONSTRUCTION
1/2/2025

Project Manager:	BCF
Drawn By:	DLC
Checked By:	TGN
Project Number:	24137
Drawing Number:	D-1525

C3.0

Date: January 2, 2025

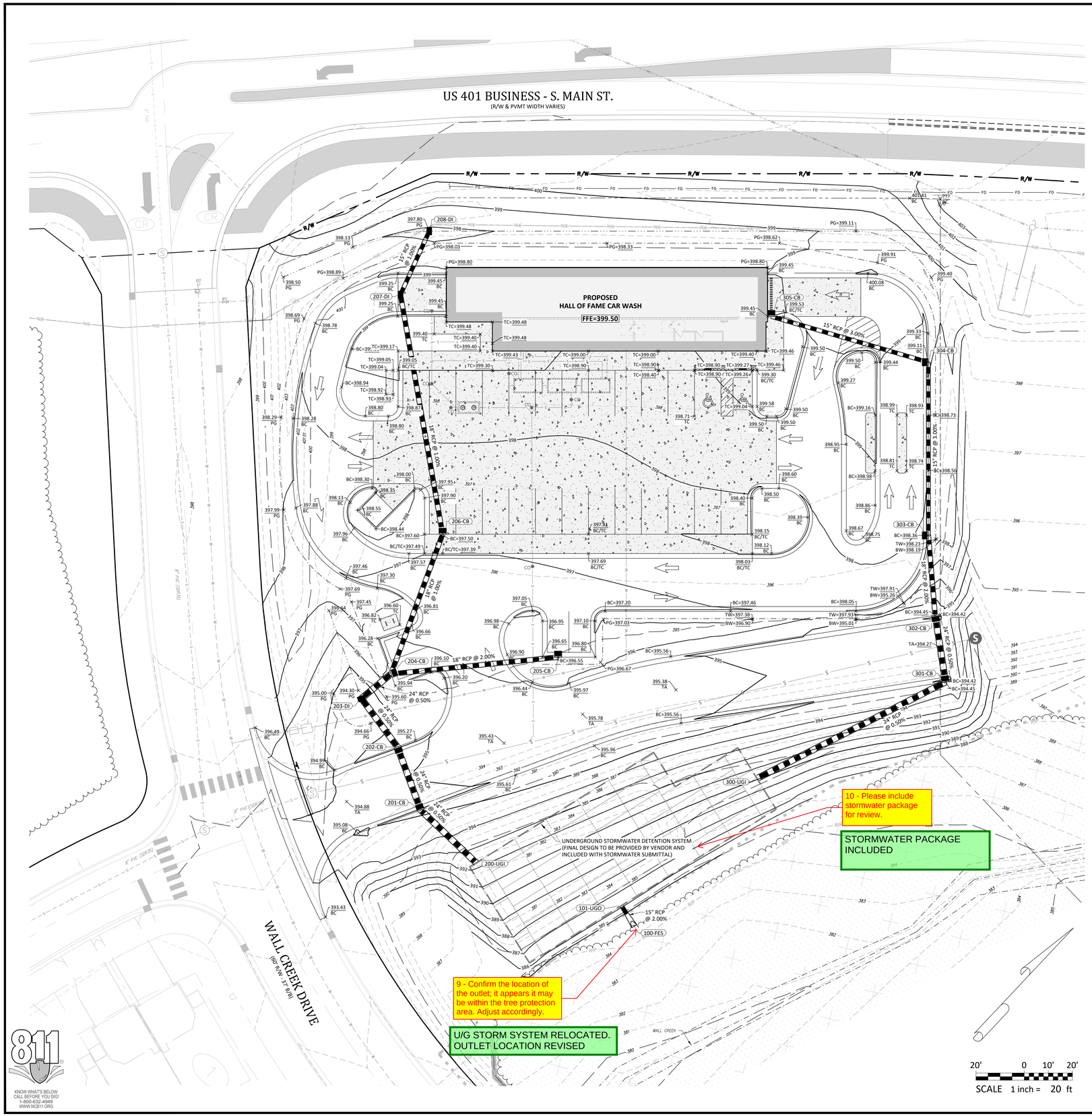

Grading Notes:

1. SITE GRADING SHALL BE PERFORMED IN ACCORDANCE WITH THESE PLANS AND SPECIFICATIONS AND THE RECOMMENDATIONS SET FORTH IN THE GEOTECHNICAL REPORT REFERENCED IN THIS PLAN SET.
2. SITE CONTRACTOR TO GRADE ALL AREAS WITHIN THE LIMITS OF DISTURBANCE FROM BUILDING TO PROPERTY LINES AND TO EDGE OF PAVEMENT ON STREET SIDES, INCLUDING ROW.
3. TREES OUTSIDE OF CONSTRUCTION LIMITS OR TREES NOT INDICATED TO BE REMOVED SHALL BE PROTECTED.
4. TOP SOIL SHALL BE STRIPPED FROM ALL CUT AND FILL AREAS, STOCKPILED AND REDISTRIBUTED OVER GRADED AREAS. PROVIDE EROSION AND SEDIMENTATION CONTROLS AROUND STOCKPILES DURING CONSTRUCTION.
5. TILL TOP SOIL TO A DEPTH OF 4" MINIMUM AND REMOVE ALL ROCKS LARGER THAN 1" MEASURED IN LARGEST DIRECTION.
6. GRADE ALL AREAS TO MAINTAIN POSITIVE SLOPE AWAY FROM BUILDING.
7. ALL GRADED AREAS TO RECEIVE SEED OR SOD, TOP SOIL, STRAW AND WATER UNTIL A HEALTHY STAND OF GRASS IS OBTAINED.
8. INSTALL TEMPORARY TURF REINFORCEMENT MATTING ON ALL SLOPES STEEPER THAN 3:1. MATTING SHALL BE CONTECH LANDLOK C2 OR EQUAL.
9. REFER TO CIVIL DETAILS FOR PAVEMENT IN PARKING AND DRIVE AREAS.
10. ALL SIDEWALKS SHALL BE CONSTRUCTED OF 3,500 PSI CONCRETE AND SHALL HAVE TOOLED CONTROL JOINTS PER THE JOINT SPACING REFERENCED ON THE PLAN.
11. MATERIALS SELECTED FOR USE AS STRUCUTRAL FILL SHALL BE FREE OF VEGETABLE MATTER, WASTE CONSTRUCTION DEBRIS, AND OTHER DELETERIOUS MATERIALS. THE MATERIAL SHALL NOT CONTAIN ROCKS HAVING A DIAMETER OVER 3 INCHES.
12. SOILS REPRESENTED BY THEIR USCS GROUP SYMBOLS WILL TYPICALLY BE SUITABLE FOR USE AS STRUCTURAL FILL: (ML), (CL), (SM), AND (SC).
13. THE FOLLOWING SOILS ARE CONSIDERED SUITABLE IN AREAS WHERE A MINIMUM THICKNESS OF 3' OF LOW PERMEABILITY SOILS CAN BE USED AS COVER: (SW), (SP), (SP-SM), AND (SP-SC).
14. THE FOLLOWING SOILS ARE CONSIDERED SUITABLE IN AREAS WHERE A MINIMUM THICKNESS OF 3' OF NON-EXPANSIVE SOILS CAN BE USED AS COVER: (MH) AND (CH).
15. THE FOLLOWING SOIL TYPES ARE CONSIDERED UNSUITABLE: (OL), (OH), AND (Pt).
16. ALL STRUCTURAL FILL SHALL BE COMPACTED TO A MINIMUM OF 95% OF THE STANDARD PROCTOR MAXIMUM DRY DENSITY (ASTM D698). ADDITIONALLY, THE IN-PLACE MAXIMUM DRY DENSITY OF STRUCTURAL FILL SHOULD BE NO LESS THAN 90 PCF.
17. THE UPPER 12" OF BUILDING FLOOR SLAB SUBGRADES SHALL BE COMPACTED TO AT LEAST 98% OF THE STANDARD PROCTOR MAXIMUM DRY DENSITY (ASTM D698).
18. FILL PLACEMENT IN PAVEMENT AREAS SHALL BE PERFORMED IN ACCORDANCE WITH NCDOT STANDARD SPECIFICATIONS.
19. SUITABLE FILL MATERIAL SHALL BE PLACED IN 8" LIFTS AND COMPACTED BY MECHANICAL MEANS. PROOFROLLING WITH RUBBER TIRED, HEAVILY LOADED VEHICLES MAY BE DESIRABLE AT INTERVALS OF APPROXIMATELY 2 VERTICAL FEET TO BIND THE LIFTS TOGETHER AND TO SEAL THE SURFACE OF THE COMPACTED AREAS.
20. ALL BUILDING, SIDEWALK, AND PAVEMENT SUB-GRADE COMPACTIONS SHALL BE INTERMEDIATELY TESTED THROUGHOUT FILL PLACEMENT OPERATIONS AND APPROVED BY THE GEOTECHNICAL ENGINEER. ALL SUB-GRADES SHALL BE THOROUGHLY PROOF-ROLLED TO IDENTIFY SMALL LOCALIZED AREAS OF UNSUITABLE SOILS. ALL UNSUITABLE SOILS SHALL BE UNDERCUT, REPLACED WITH STRUCTURAL FILL, AND COMPACTED AS DESCRIBED ABOVE.
21. WHERE REQUIRED, PAVEMENT SHALL BE SAW CUT IN STRAIGHT LINES, AND EXCEPT FOR EDGE OF BUTT JOINTS, SHALL EXTEND TO THE FULL DEPTH OF THE EXISTING PAVEMENT. ALL DEBRIS FROM REMOVAL OPERATIONS SHALL BE REMOVED FROM THE SITE AT THE TIME OF EXCAVATION. STOCKPILING OF DEBRIS WILL NOT BE PERMITTED.
22. THE TOPS OF EXISTING MANHOLES, INLET STRUCTURES, CLEANOUTS, ETC. SHALL BE ADJUSTED, AS REQUIRED, TO MATCH PROPOSED GRADES.
23. SITE CONTRACTOR SHALL BE REQUIRED TO SECURE ALL NECESSARY PERMITS AND APPROVALS FOR OFF SITE MATERIAL SOURCES AND / OR DISPOSAL FACILITIES. CONTRACTOR SHALL SUPPLY A COPY OF APPROVALS TO OWNER PRIOR TO INITIATING WORK.
24. UNLESS INDICATED OTHERWISE, ALL STORM DRAINAGE PIPE SHALL BE REINFORCED CONCRETE PIPE (RCP) CLASS III WITH SOIL TIGHT JOINTS.
25. SITE CONTRACTOR SHALL INSTALL BUILDING ROOF DRAINS TO WITHIN 2' OF THE BUILDING EXTERIOR WALL, CAP AND PROVIDE ABOVE GROUND MARKER FOR LOCATION PURPOSES. GENERAL CONTRACTOR IS RESPONSIBLE FOR TIE-INS OF BUILDING DOWNSPOUTS TO SITE ROOF DRAINAGE PIPING.

STRUCTURE TABLE

ID	TOP	IN	OUT	DESC
100-FES	385.92	384.30 (101-UGO)		15 in FES
101-UGO	386.02		384.50 (100-FES)	U/G Detention Outlet

STRUCTURE TABLE

ID	TOP	IN	OUT	DESC
200-UGI	386.88	384.50 (201-CB)		U/G Detention Inlet
201-CB	395.19	390.44 (202-CB)	384.66 (200-UGI)	Catch Basin
202-CB	395.19	390.78 (203-DI)	390.58 (201-CB)	Catch Basin
203-DI	394.20	391.11 (204-CB)	390.91 (202-CB)	Drop Inlet
204-CB	395.89	391.79 (206-CB) 391.45 (205-CB)	391.19 (203-DI)	Catch Basin
205-CB	396.55		392.84 (204-CB)	Catch Basin
206-CB	397.50	392.61 (207-DI)	392.41 (204-CB)	Catch Basin
207-DI	398.60	394.02 (208-DI)	393.62 (206-CB)	Drop Inlet
208-DI	397.80		394.31 (207-DI)	Drop Inlet

STRUCTURE TABLE

ID	TOP	IN	OUT	DESC
300-UGI	386.88	384.50 (301-CB)		U/G Detention Inlet
301-CB	395.04	385.14 (302-CB)	384.94 (300-UGI)	Catch Basin
302-CB	395.04	390.84 (303-CB)	385.28 (301-CB)	Catch Basin
303-CB	398.36	391.71 (304-CB)	391.51 (302-CB)	Catch Basin
304-CB	399.11	394.06 (305-CB)	393.86 (303-CB)	Catch Basin
305-CB	399.47		396.10 (304-CB)	Catch Basin

Abbreviations

BC	BACK OF CURB
TC	TOP OF CONCRETE
TA	TOP OF ASPHALT
TW	TOP OF WALL
BW	BOTTOM OF WALL
PG	PROPOSED GRADE/GROUND
CB	CATCH BASIN
DI	DROP INLET
INV	INVERT
U/G	UNDERGROUND

KNOW WHAT'S BELOW
CALL BEFORE YOU DIG!
1-800-632-4949
WWW.NC811.ORG

#	DATE	DESCRIPTION
1	2-JAN-25	INITIAL SUBMITTAL FOR REVIEW

REVISIONS:

GRADING & DRAINAGE PLAN

HALL OF FAME CAR WASH

WALLBROOK - LOT 8
Town of Rolesville Project No. SDP 25-01
US 401 Business / S. Main Street & Wall Creek Drive
Wake Forest Township, Town of Rolesville, Wake County, North Carolina

NC License: P-1199
ARK CONSULTING GROUP PLLC
ENGINEERS & SURVEYORS
925-A Conference Drive
Greenville, NC 27858
(252) 558-0888
www.arkconsultinggroup.com

NORTH CAROLINA PROFESSIONAL ENGINEER SEAL 049121 BRANDON C. FAGUNDES
PRELIMINARY NOT FOR CONSTRUCTION
1/2/2025

Project Manager:	BCF
Drawn By:	DLC
Checked By:	TGN
Project Number:	24137
Drawing Number:	D-1525

C4.0

Date: January 2, 2025

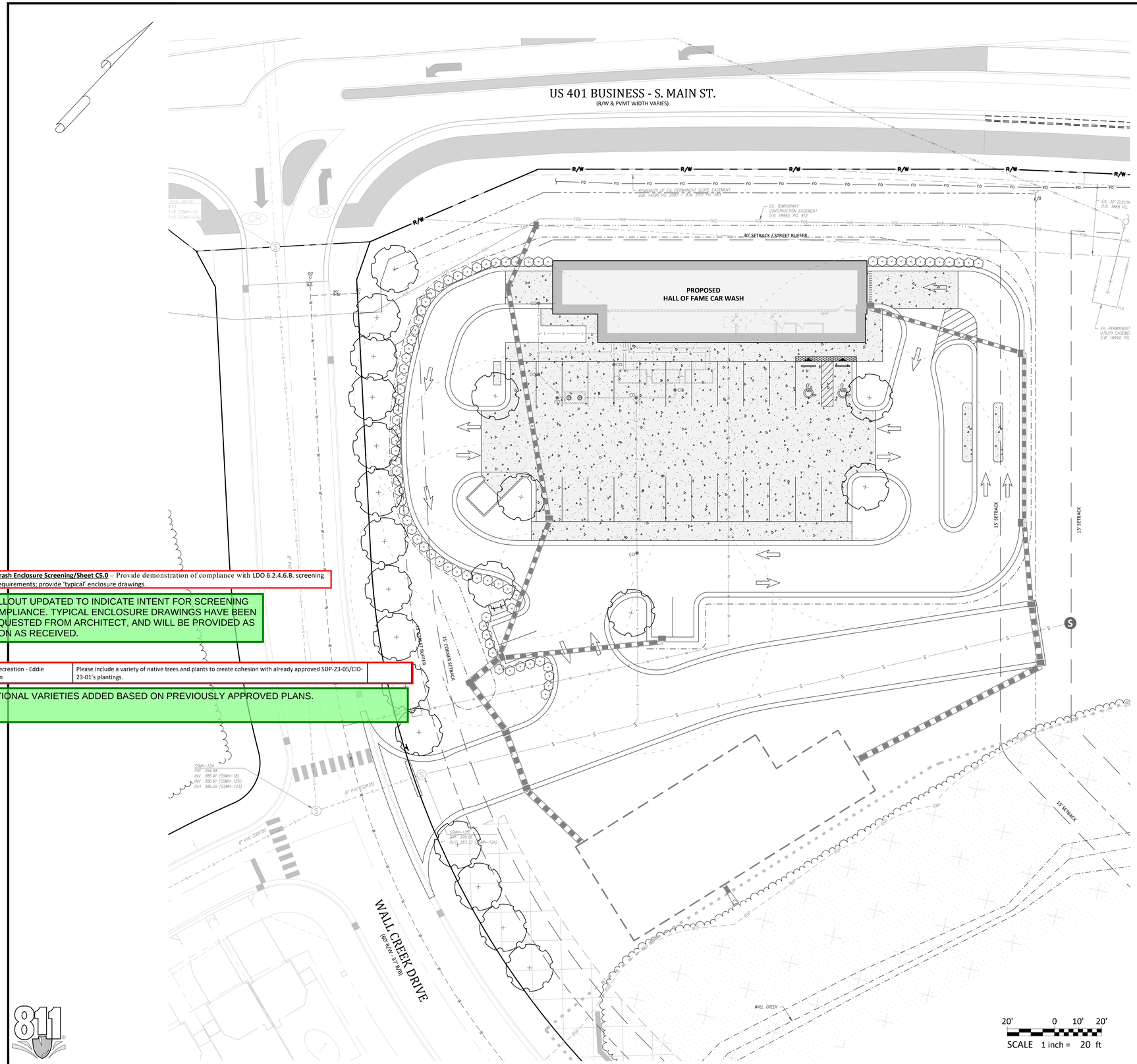

6. **Trash Enclosure Screening/Sheet C5.0** – Provide demonstration of compliance with LDO 6.2.4.6.B. screening requirements; provide 'typical' enclosure drawings.

CALLOUT UPDATED TO INDICATE INTENT FOR SCREENING COMPLIANCE. TYPICAL ENCLOSURE DRAWINGS HAVE BEEN REQUESTED FROM ARCHITECT, AND WILL BE PROVIDED AS SOON AS RECEIVED.

Parks & Recreation - Eddie Henderson	Please include a variety of native trees and plants to create cohesion with already approved SDP-23-05/CID-23-01's plantings.	

ADDITIONAL VARIETIES ADDED BASED ON PREVIOUSLY APPROVED PLANS.

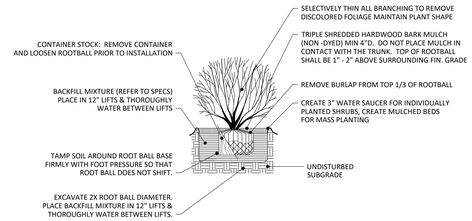

SHRUB PLANTING

NOT TO SCALE

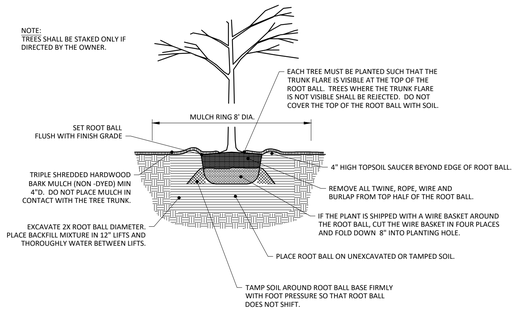

LARGE AND SMALL TREE PLANTING

NOT TO SCALE

Bufferyard Notes:

1. SITE DATA:
   A. PROVIDED VEGETATION FOR LOT:
      LARGE TREES: 21 PROVIDED
   B. REQUIRED STREET VEGETATION:
      LARGE TREES: S. MAIN STREET = 280 LF / 40 * 1 TREE = 7 TREES (7 PROVIDED BY NCDOT MAIN STREET IMPROVEMENTS (U-6241))
      WALL CREEK DRIVE = 600 LF / 40 * 1 TREE = 15 TREES (15 PROVIDED)
   C. REQUIRED SCREENING VEGETATION: NONE
   D. REQUIRED VEGETATION LOCATED IN EASEMENTS: NONE
2. NOTES:
   A. MINIMUM PLANT SIZES SHALL BE IN ACCORDANCE WITH THE SECTION 6.2.4.3 OF THE LDO AS FOLLOWS:

PLANTING MATERIAL TYPE	MINIMUM PLANTING SIZE
1. LARGE (CANOPY) TREE	8' (HEIGHT AND 2" CALIPER
2. SMALL/MEDIUM (UNDERSTORY) TREE	8' (HEIGHT) AND 1" CALIPER
3. SHRUB	24" (HEIGHT) - EVERGREEN
	18" (HEIGHT) - DECIDUOUS

   B. NO PORTION OF ANY PARKING SPACE SHALL BE LOCATED MORE THAN SIXTY (60) FEET FROM AN ON-SITE LARGE (CANOPY) TREE. FOR PURPOSES OF THIS SECTION, THE MEASUREMENT SHALL BE FROM THE CLOSEST EDGE OF THE SUBJECT AREA TO THE CENTER OF THE BASE OF THE CLOSEST QUALIFYING TREE IN ACCORDANCE WITH SECTION 6.2.4.4 OF THE LDO.
   C. DUMPSTER/COMPACTOR SHALL BE SCREENED ON 3 SIDES IN ACCORDANCE WITH SECTION 6.2.4.6 OF THE LDO.
   D. NO TREES OR SHRUBS SHALL BE PLANTED WITHIN SANITARY SEWER, WATERLINE OR ELECTRIC EASEMENTS WITHOUT THE TOWN AND EASEMENT HOLDER APPROVAL.
   E. ALL MULTI-STEM TREES SHALL HAVE AT LEAST THREE STALKS WITH A MINIMUM CALIPER OF 2.5" IN ACCORDANCE WITH SECTION 6.2.4.7 OF THE LDO.
   F. LANDSCAPING SHALL BE COMPLIANT WITH LDO SECTION 6.2.4
   G. MINIMUM OF 3 FEET CLEARANCE MUST BE MAINTAINED AROUND ALL FIRE HYDRANTS IN ACCORDANCE WITH STATE BUILDING CODE.
   H. PLANTINGS WITHIN THE R/W ARE TO BE INSTALLED AS PART OF THE MAIN STREET PROJECT (NCDOT U-6241). SEE STANTEC PLAN SHEET L-4.
   I. REFER TO WALLBROOK PRELIMINARY PLAT (PR 21-04 REV) FOR VEGETATION PRESERVATION IN THIS AREA.
   J. CONTRACTOR SHALL PLACE WEED MATTING AND METAL EDGING LOCATED AT THE BACK OF CURB AROUND ALL MULCH BEDS

Vegetation Legend:

PROPOSED LARGE TREE (CANOPY)
TOTAL QUANTITY = 21
CALIPER = 3"
HEIGHT = 12'
MATURE HEIGHT = 50' - 80'
COMMON NAME: RED MAPLE
BOTANICAL NAME: ACER RUBRUM

PROPOSED SHRUB(S)
TOTAL QUANTITY = 76
HEIGHT = 24"
MATURE HEIGHT = 24" - 36"
COMMON NAME = GREY OWL EASTERN RED CEDAR
BOTANICAL NAME = JUNIPERUS VIRGINIANA 'GREY OWL'

KNOW WHAT'S BELOW. CALL BEFORE YOU DIG! 1-800-632-4949 WWW.NC811.ORG

#	DATE	DESCRIPTION
1	2-JAN-25	INITIAL SUBMITTAL FOR REVIEW

REVISIONS:

REQUIRED VEGETATION PLAN

HALL OF FAME CAR WASH

WALLBROOK - LOT 8
Town of Rolesville Project No. SDP 25-01
US 401 Business / S. Main Street & Wall Creek Drive
Wake Forest Township, Town of Rolesville, Wake County, North Carolina

ARK CONSULTING GROUP PLLC
ENGINEERS & SURVEYORS
NC License: P-1199
925-A Conference Drive
Greenville, NC 27858
(252) 558-0888
www.arkconsultinggroup.com

NORTH CAROLINA PROFESSIONAL ENGINEER SEAL 19720 BRIAN C. FAGUNDES
PRELIMINARY FOR REVIEW & CONSTRUCTION
1/2/2025

Project Manager:	BCF
Drawn By:	DLC
Checked By:	TGN
Project Number:	24137
Drawing Number:	D-1525

C5.0

Date: January 2, 2025

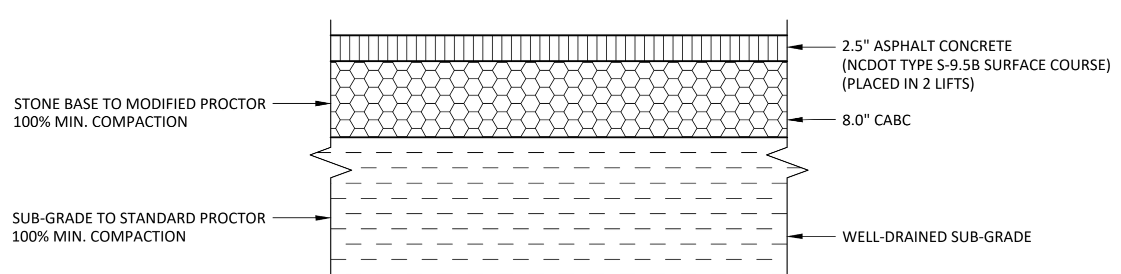

STANDARD ASPHALT PAVEMENT SECTION
NOT TO SCALE

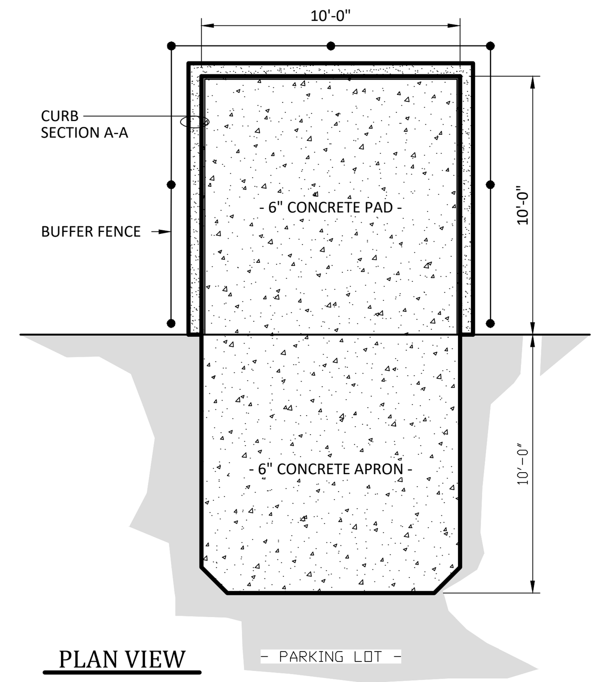

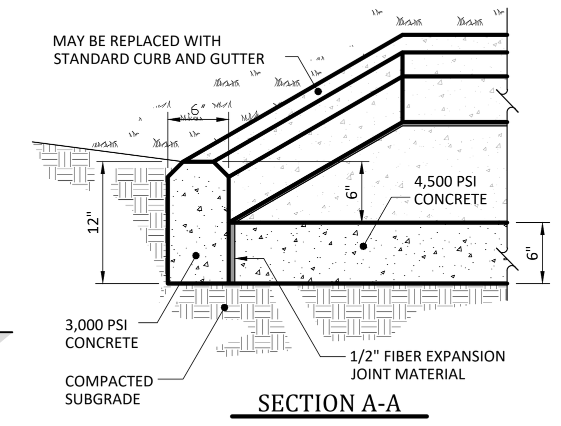

NOTES:
1. Container pad must be flush with parking lot pavement.

DUMPSTER PAD
NOT TO SCALE

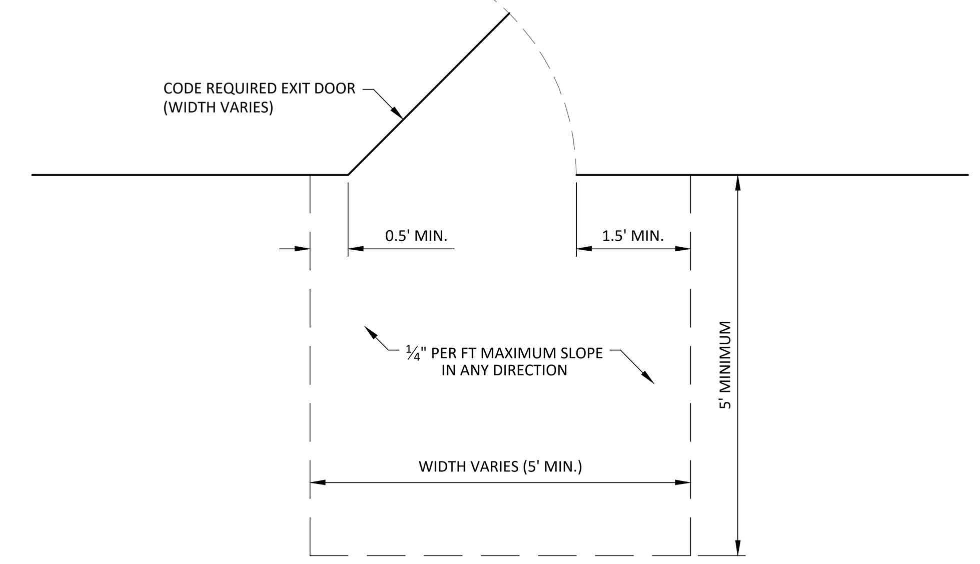

*REFER TO ARCHITECTURAL DRAWING(S) FOR REQUIRED EXIT DOOR LOCATION(S)

REQUIRED BUILDING EXIT DOOR ACCESSIBLE GRADES
NOT TO SCALE

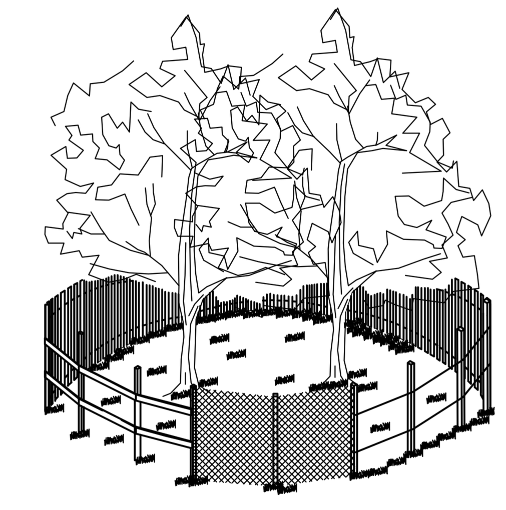

NOTES:
1. SIGNS ARE TO BE PLACED NO GREATER THAN 200' ON CENTER. PLACE SIGN AT EACH END OF LINEAR TREE PROTECTION AREA AND 200' ON CENTER THEREAFTER.
2. FOR TREE PROTECTION AREAS LESS THAN 200' IN PERIMETER, PROVIDE NO LESS THAN ONE SIGN PER PROTECTION AREA.
3. ATTACH SIGNS SECURELY TO FENCE POSTS AND FABRIC.
4. WARNING SIGNS TO BE MADE OF DURABLE, WEATHERPROOF MATERIAL.
5. LETTERS ARE TO BE 3" HIGH MINIMUM, CLEARLY LEGIBLE, AND SPACED AS DETAILED.
6. INSTALL TREE PROTECTION FENCE & SIGNAGE PRIOR TO CALLING FOR THE INITIAL ON-SITE INSPECTION BY A NCDENR INSPECTOR. MAINTAIN TREE PROTECTION FENCE THROUGHOUT DURATION OF PROJECT. ADDITIONAL SIGNS MAY BE REQUIRED BY NCDEQ BASED ON ACTUAL FIELD CONDITIONS.

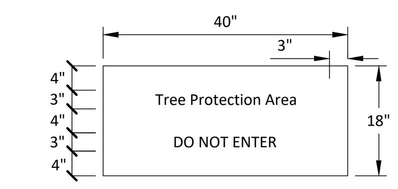

SIGN DETAIL
NTS

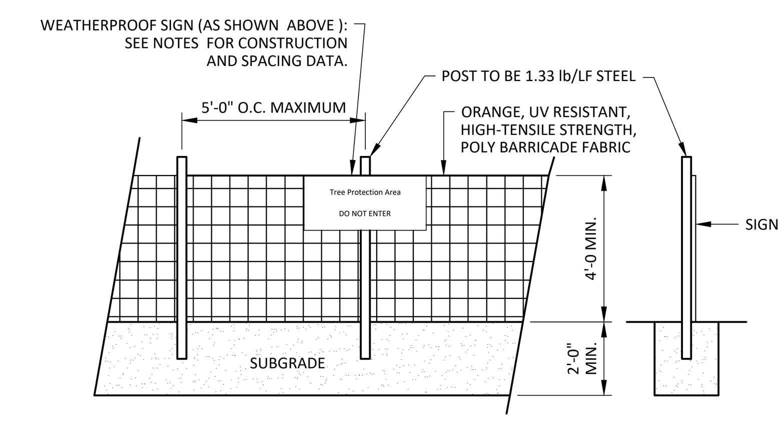

TREE PROTECTION FENCE
NOT TO SCALE

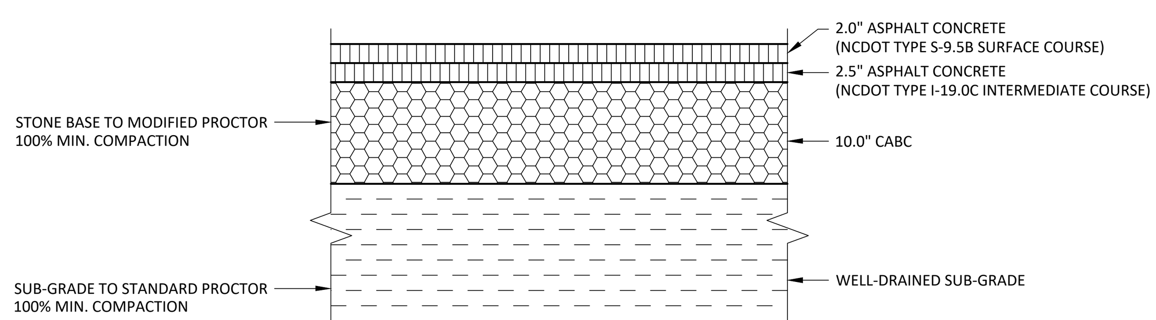

HEAVY DUTY ASPHALT PAVEMENT SECTION
NOT TO SCALE

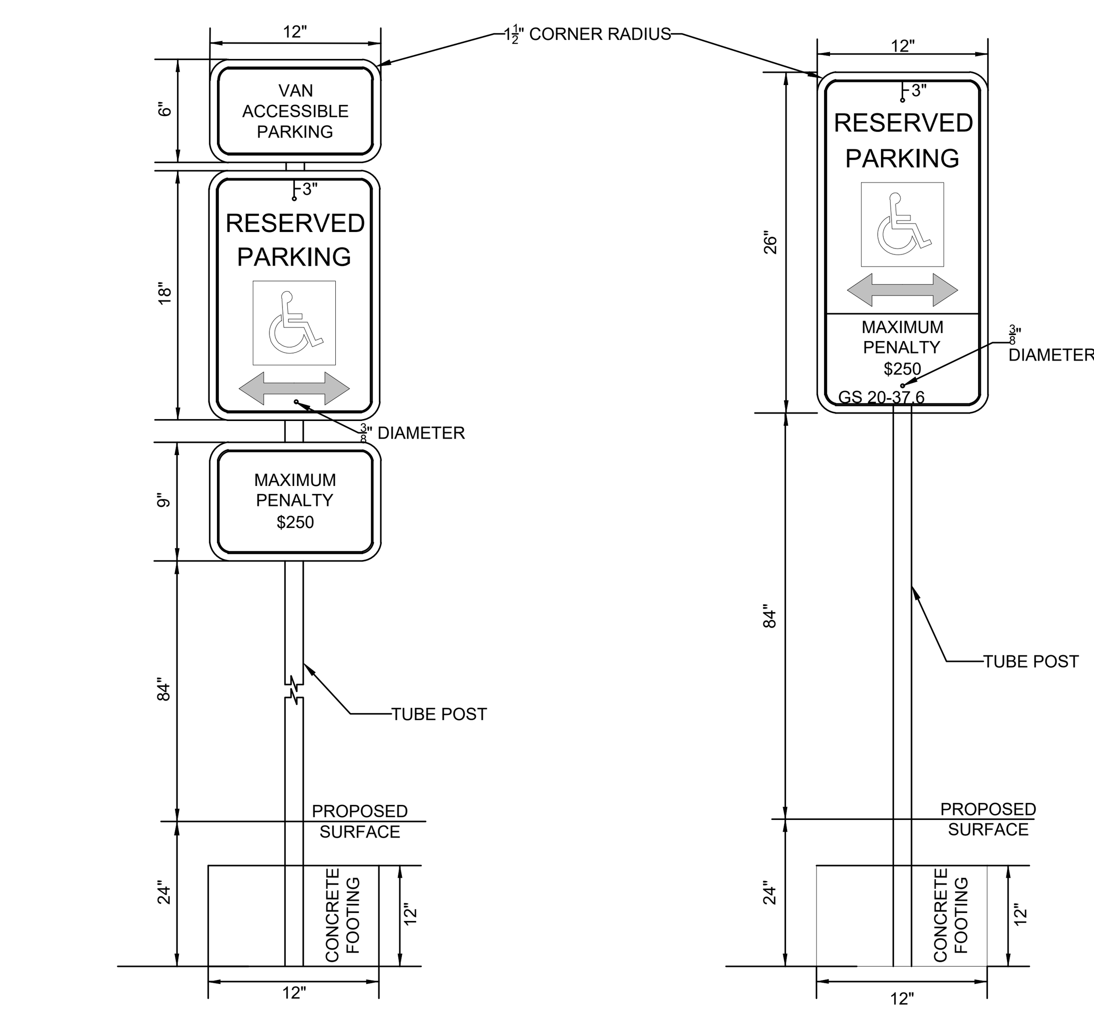

NOTES:

1. ALL INFORMATION MUST MEET THE CURRENT NORTH CAROLINA DOT STANDARDS, IF CONFLICT ARISES NCDOT STANDARDS SHALL DICTATE.
2. EACH HANDICAP PARKING SHALL HAVE ITS OWN SIGN.
3. SIGN SHALL BE ENGINEERING GRADE REFLECTIVE ALUMINIMUM, MEETING ASTM D4956 TYPE I.REFLECTION SHALL BE EFFECTIVE FOR 7 YEARS AND WILL BE RESISTANT TO FADING AND MILD CHEMICALS.
4. SIGN SHALL BE 0.08" THICK - 18 GUAGE GALVAIZED SHEET METAL.
5. THE SIGN SHALL HAVE SERVICE TEMP RANGE OF -10°F TO 130°F.
6. THE AVERAGE TEXT SIZE SHALL BE 1½" HELVETICA MEDIUM LETTERS.
7. HANDICAP SYSMBOL SHALL BE WHITE ON A BLUE BLACKGROUND.
8. BACKGROUND OF THE SIGN SHALL BE WHITE.
9. SIGN SHALL BE ATTACHED TO A 2" STEEL TUBE POST, TUBE SHALL BE PAINTED WITH A SUITABLE FLAT BLACK PAINT - 2 COATS.
10. THE SIGN SHALL BE MOUNTED TO THE SIGN USING A ½"X 2½" LONG STRUSS HEAD GALVANIZED BOLTS THROUGH THE SIGN AND POST. MOUNTED AT THE TOP AND BOTTOM.
11. MOUNT POST IN BOLLARD. SEE SHEET C6.1 FOR BOLLARD DETAIL.

PARKING LOT STRIPING

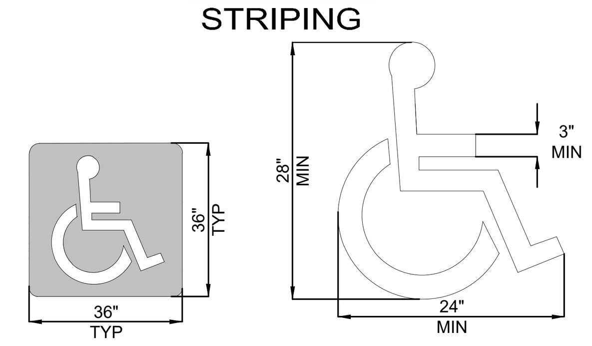

ACCESSIBLE PARKING SIGN
NOT TO SCALE

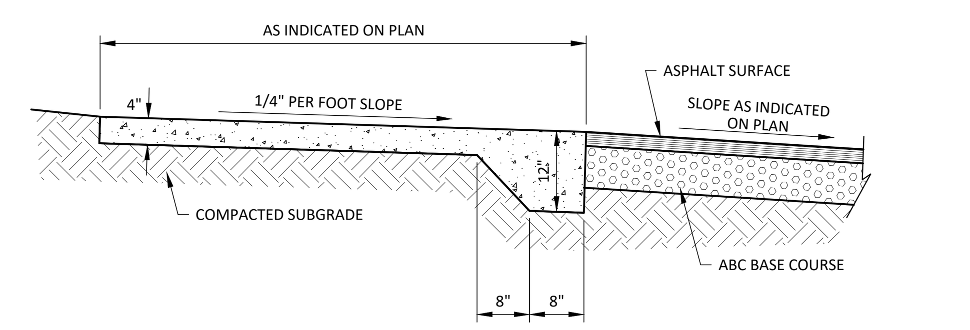

THICKENED EDGE CONCRETE WALK
NOT TO SCALE

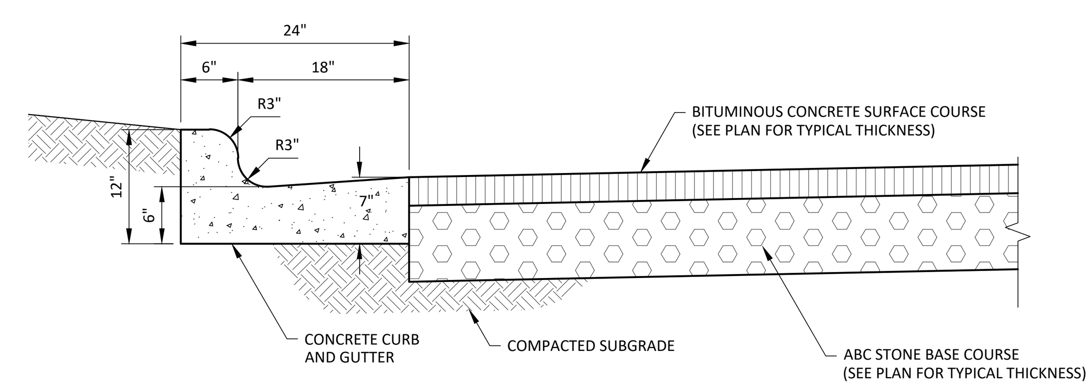

CURB AND GUTTER AND PAVEMENT DETAIL
NOT TO SCALE

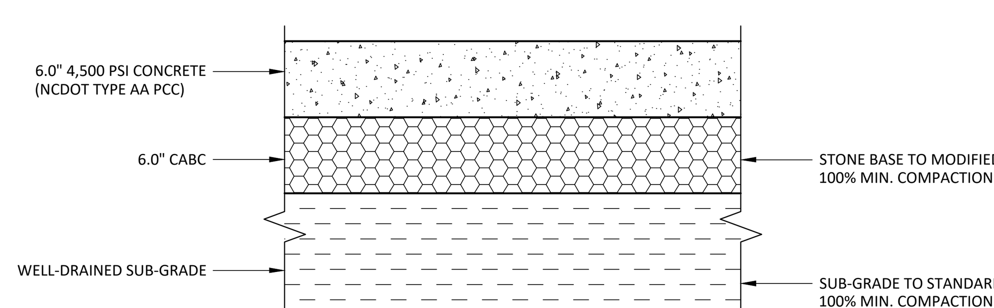

CONCRETE PAVEMENT SECTION
NOT TO SCALE

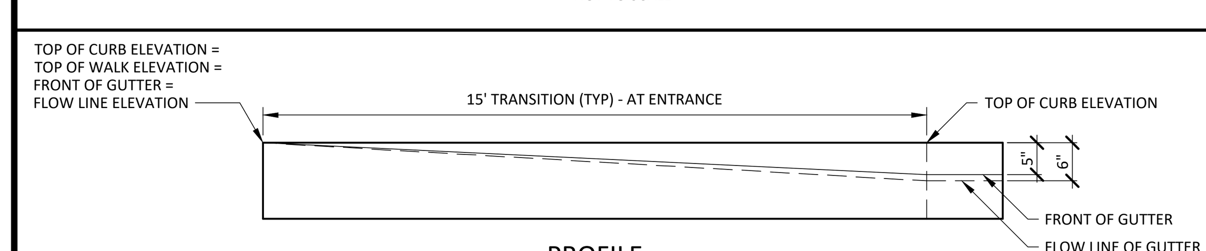

PROFILE

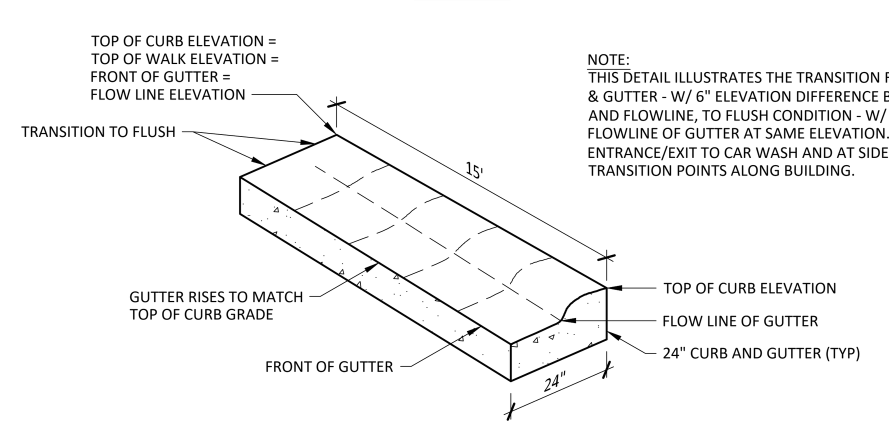

NOTE:
THIS DETAIL ILLUSTRATES THE TRANSITION FROM STANDARD CURB & GUTTER - W/ 6" ELEVATION DIFFERENCE BETWEEN TOP OF CURB AND FLOWLINE, TO FLUSH CONDITION - W/ TOP OF CURB AND FLOWLINE OF GUTTER AT SAME ELEVATION. TYPICALLY USED AT ENTRANCE/EXIT TO CAR WASH AND AT SIDEWALK/CURB & GUTTER TRANSITION POINTS ALONG BUILDING.

ISOMETRIC VIEW

CURB AND GUTTER TO FLUSH PAVING TRANSITION
NOT TO SCALE

NOTES:
1. 8.33% (12:1) MAX RAMP SLOPE
2. CROSS SLOPE: 2.00%
3. CURB RAMPS REQUIRE A (4'-0") MINIMUM LANDING WITH A MAXIMUM CROSS SLOPE AND LONGITUDINAL SLOPE OF 2.00% WHERE PEDESTRIANS PERFORM TURNING MANEUVERS. SLOPE TO DRAIN TO CURB.

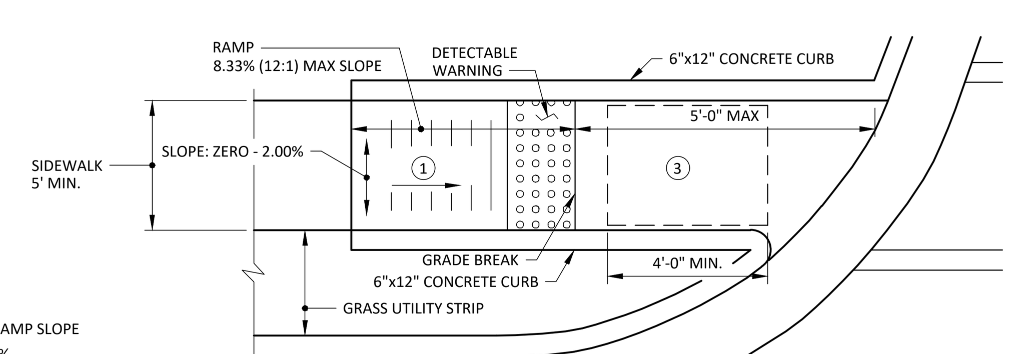

TYPE 1

REFER TO NCDOT ROADWAY STANDARD DRAWING NUMBER 848.05 SHEET 3 OF 3 FOR ALL RAMP NOTES

CURB RAMPS - DIRECTIONAL RAMPS
NOT TO SCALE

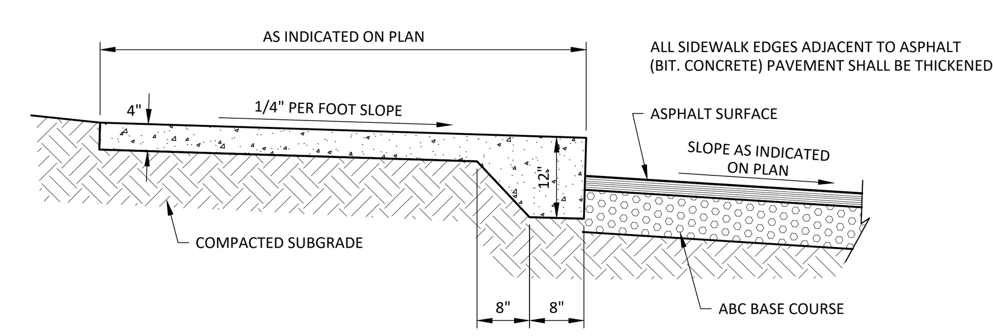

RAISED THICKENED EDGE CONCRETE WALK
NOT TO SCALE

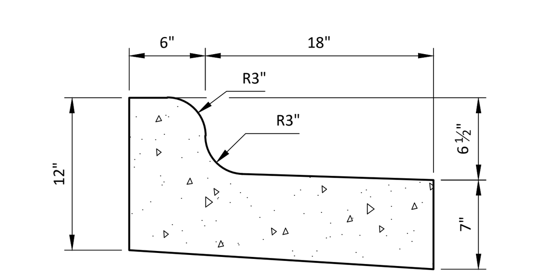

24" CONCRETE CURB AND GUTTER - SPILL

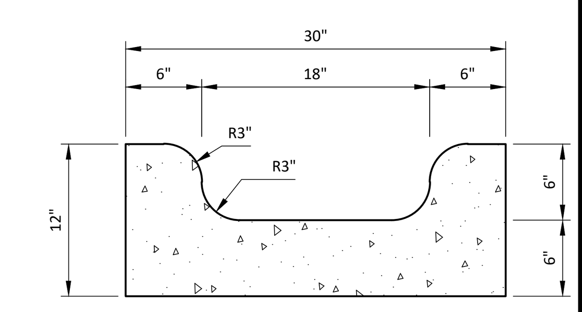

SPECIAL GUTTER

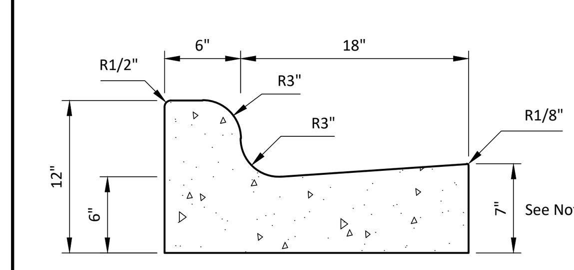

24" CONCRETE CURB AND GUTTER

GENERAL NOTES:
1. CONTRACTION JOINTS SHALL BE SPACED AT 10' INTERVALS, EXCEPT THAT A 15' SPACING MAY BE USED WHEN A MACHINE IS USED OR WHEN SATISFACTORY SUPPORT FOR THE FACE FORM CAN BE OBTAINED WITHOUT THE USE OF TEMPLATES AT 10' INTERVALS. JOINT SPACING MAY BE ALTERED BY THE ENGINEER TO PREVENT UNCONTROLLED CRACKING.
2. CONTRACTION JOINTS MAY BE INSTALLED BY THE USE OF TEMPLATES OR FORMED BY OTHER APPROVED METHODS. WHERE SUCH JOINTS ARE NOT FORMED BY TEMPLATES, A MINIMUM DEPTH OF 1 1/2" SHALL BE OBTAINED.
3. ALL CONTRACTION JOINTS SHALL BE FILLED WITH JOINT FILLER.
4. EXPANSION JOINTS SHALL BE SPACED AT 90' INTERVALS, AND ADJACENT TO ALL RIGID OBJECTS.
5. ALL CURB AND GUTTERS ARE TO BE POURED WITH CLASS "A" CONCRETE. (3000 PSI)
6. FLEXIBLE FORMS ARE TO BE USED WHEN RADII IS LESS THAN 200.

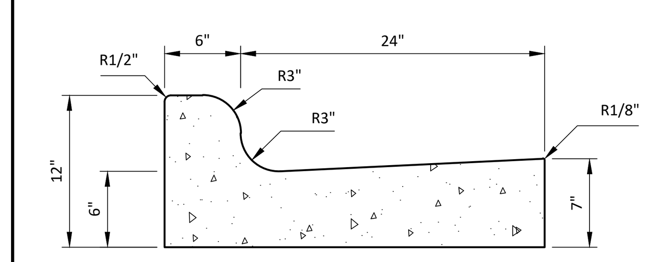

30" CONCRETE CURB AND GUTTER

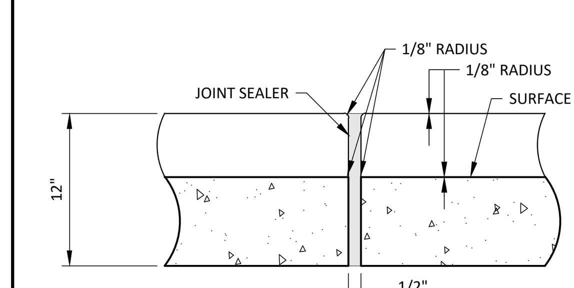

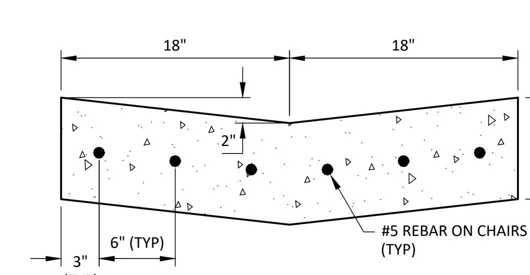

CONCRETE VALLEY GUTTER

CURB AND GUTTER DETAIL
NOT TO SCALE

#	DATE	DESCRIPTION
1	2-JAN-25	INITIAL SUBMITTAL FOR REVIEW

REVISIONS:

MISC. DETAILS

HALL OF FAME CAR WASH
WALLBROOK - LOT 8
Town of Rolesville Project No. SDP 25-01
US 401 Business / S. Main Street & Wall Creek Drive
Wake Forest Township, Town of Rolesville, Wake County, North Carolina

NC License: P-1199
ARK CONSULTING GROUP, PLLC
ENGINEERS & SURVEYORS
925-A Conference Drive
Greenville, NC 27858
(252) 558-0888
www.arkconsultinggroup.com

NORTH CAROLINA PROFESSIONAL ENGINEER SEAL 041670 BRIAN C. FAGUNDUS
PRELIMINARY Do Not Use for Construction
1/2/2025

Project Manager:	BCF
Drawn By:	DLC
Checked By:	TGN
Project Number:	24137
Drawing Number:	D-1525

C6.1

Date: January 2, 2025

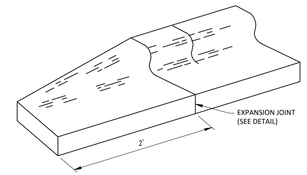

CURB TAPER DETAIL

NOT TO SCALE

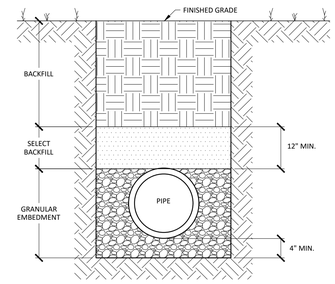

CLASS 'D'

TRENCH SECTION DETAIL FOR THE INSTALLATION OF PVC GRAVITY STORM DRAIN & SANITARY SEWER PIPING

NOT TO SCALE

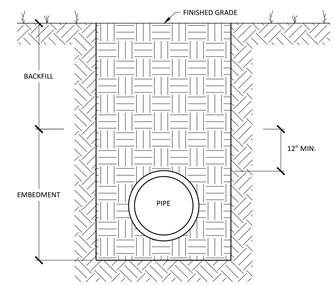

CLASS 'F'

TRENCH SECTION FOR THE INSTALLATION OF REINFORCED CONCRETE PIPE

NOT TO SCALE

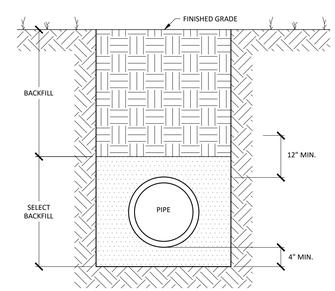

CLASS 'E'

TRENCH SECTION DETAIL FOR THE INSTALLATION OF PVC PRESSURE PIPE

NOT TO SCALE

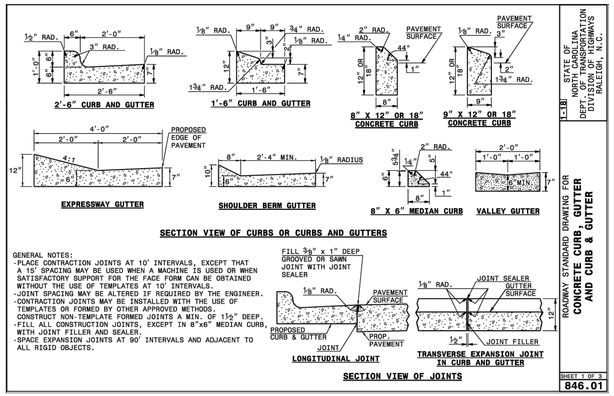

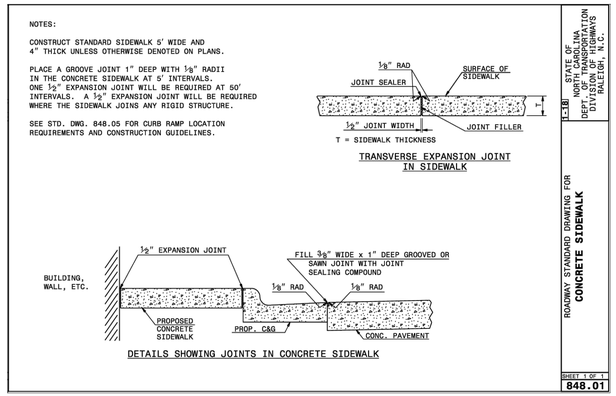

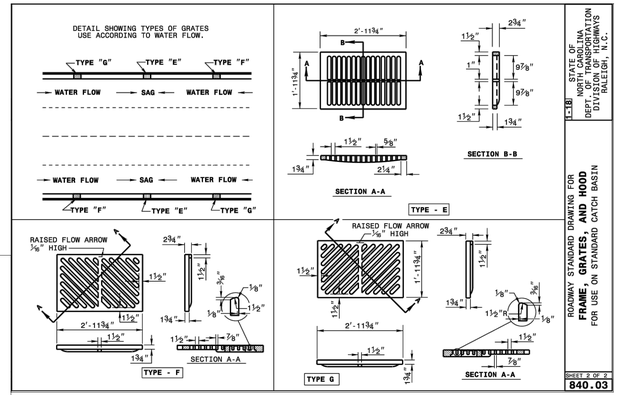

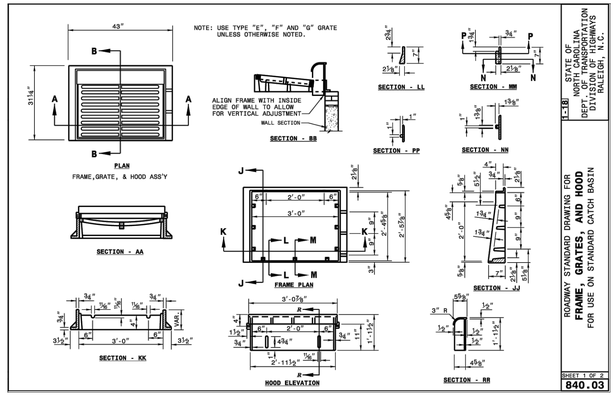

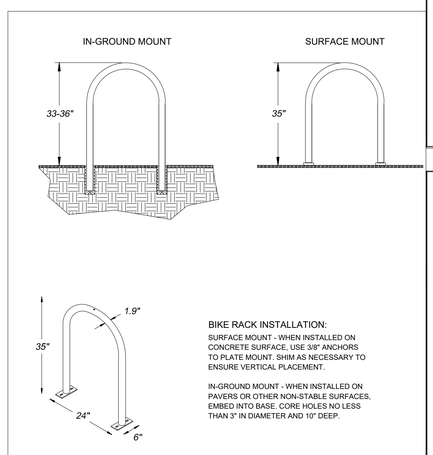

BIKE RACK INSTALLATION:

SURFACE MOUNT - WHEN INSTALLED ON CONCRETE SURFACE, USE 3/8" ANCHORS TO PLATE MOUNT. SHIM AS NECESSARY TO ENSURE VERTICAL PLACEMENT.

IN-GROUND MOUNT - WHEN INSTALLED ON PAVERS OR OTHER NON-STABLE SURFACES, EMBED INTO BASE. CORE HOLES NO LESS THAN 3" IN DIAMETER AND 10" DEEP.

CITY OF RALEIGH
STANDARD DETAIL

REVISIONS	DATE ISSUE	NOT TO SCALE
		BIKE RACK DETAILS

B-20.03

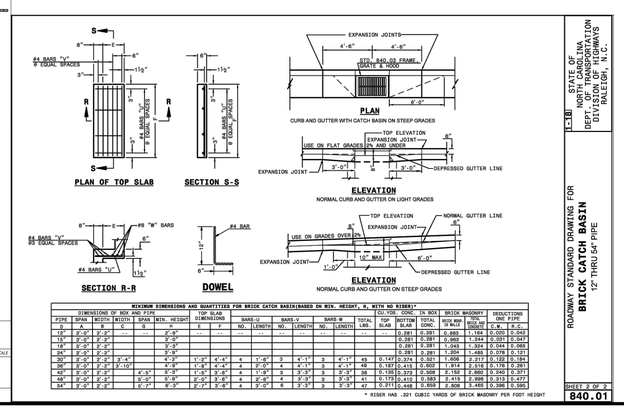

MINIMUM DIMENSIONS AND QUANTITIES FOR BRICK CATCH BASIN(BASED ON MIN. HEIGHT, H, WITH NO RISER)*

DIMENSIONS OF BOX AND PIPE									TOP SLAB DIMENSIONS		BARS-U		BARS-V		BARS-W		TOTAL LBS.	TOTAL CONC.	BRICK MASONRY		QUANTITIES ONE PIPE	
PIPE	SPAN	WIDTH	WIDTH	SPAN	MIN. HEIGHT		E	F			NO.	LENGTH	NO.	LENGTH	NO.	LENGTH			BOTTOM SLAB	TOTAL SLAB	MORTAR (CU. YDS.)	BRICK (NO. OF BRICKS)	C.Y.	B.C.
D	A	B	C	D	H																			
12"	2'-0"	2'-0"	--	--	2'-0"		--	--	--	--	--	--	--	--	--	--	--	--	0.281	0.281	0.889	1.164	0.020	0.042
15"	2'-0"	2'-0"			2'-0"														0.281	0.281	0.985	1.244	0.021	0.047
18"	2'-0"	2'-0"			2'-0"														0.281	0.281	1.043	1.324	0.044	0.065
24"	2'-0"	2'-0"			2'-0"														0.281	0.281	1.204	1.485	0.078	0.121
30"	2'-0"	2'-0"	3'-4"		4'-3"		1'-3"	4'-4"	4	1'-6"	3	4'-1"	3	4'-1"	45	0.147	0.374	0.521	1.606	2.217	0.122	0.184	
36"	2'-0"	2'-0"	3'-10"		4'-9"		1'-8"	4'-4"	4	2'-0"	4	4'-1"	3	4'-1"	49	0.167	0.415	0.582	1.914	2.518	0.178	0.261	
42"	2'-0"	2'-0"		6'-5"	5'-0"		1'-5"	3'-6"	4	1'-9"	3	3'-3"	3	3'-3"	38	0.138	0.373	0.508	2.162	2.660	0.240	0.371	
48"	2'-0"	2'-0"		6'-9"	5'-9"		1'-8"	3'-6"	4	2'-6"	3	3'-3"	3	3'-3"	41	0.173	0.410	0.583	2.415	2.998	0.313	0.477	
54"	2'-0"	2'-0"		7'-7"	6'-5"		2'-7"	3'-6"	4	3'-0"	6	3'-3"	3	3'-3"	47	0.211	0.448	0.659	2.808	3.465	0.396	0.585	

* RISER HAS .321 CUBIC YARDS OF BRICK MASONRY PER FOOT HEIGHT

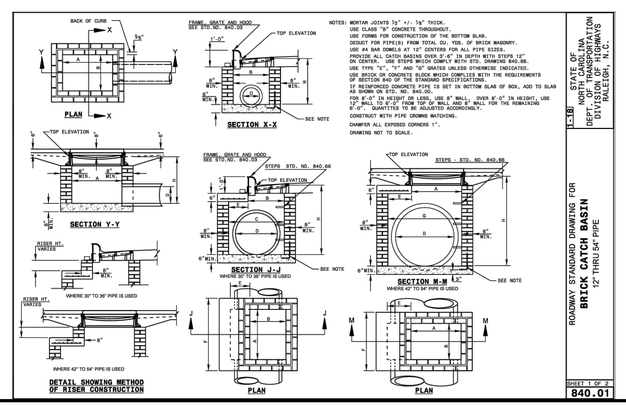

#	DATE	DESCRIPTION
1	2-JAN-25	INITIAL SUBMITTAL FOR REVIEW

REVISIONS:

MISC. DETAILS

HALL OF FAME CAR WASH

WALLBROOK - LOT 8

Town of Rolesville Project No. SDP 25-01
US 401 Business / S. Main Street & Wall Creek Drive
Wake Forest Township, Town of Rolesville, Wake County, North Carolina

ARK CONSULTING GROUP PLLC
ENGINEERS & SURVEYORS
NC License: P-1199
925-A Conference Drive
Greenville, NC 27858
(252) 558-0888
www.arkconsultinggroup.com

PRELIMINARY not for construction
NORTH CAROLINA PROFESSIONAL ENGINEER SEAL 049324 BRIAN CHASE FAGUNDES
1/2/2025

Project Manager:	BCF
Drawn By:	DLC
Checked By:	TGN
Project Number:	24137
Drawing Number:	D-1525

C6.2

Date: January 2, 2025

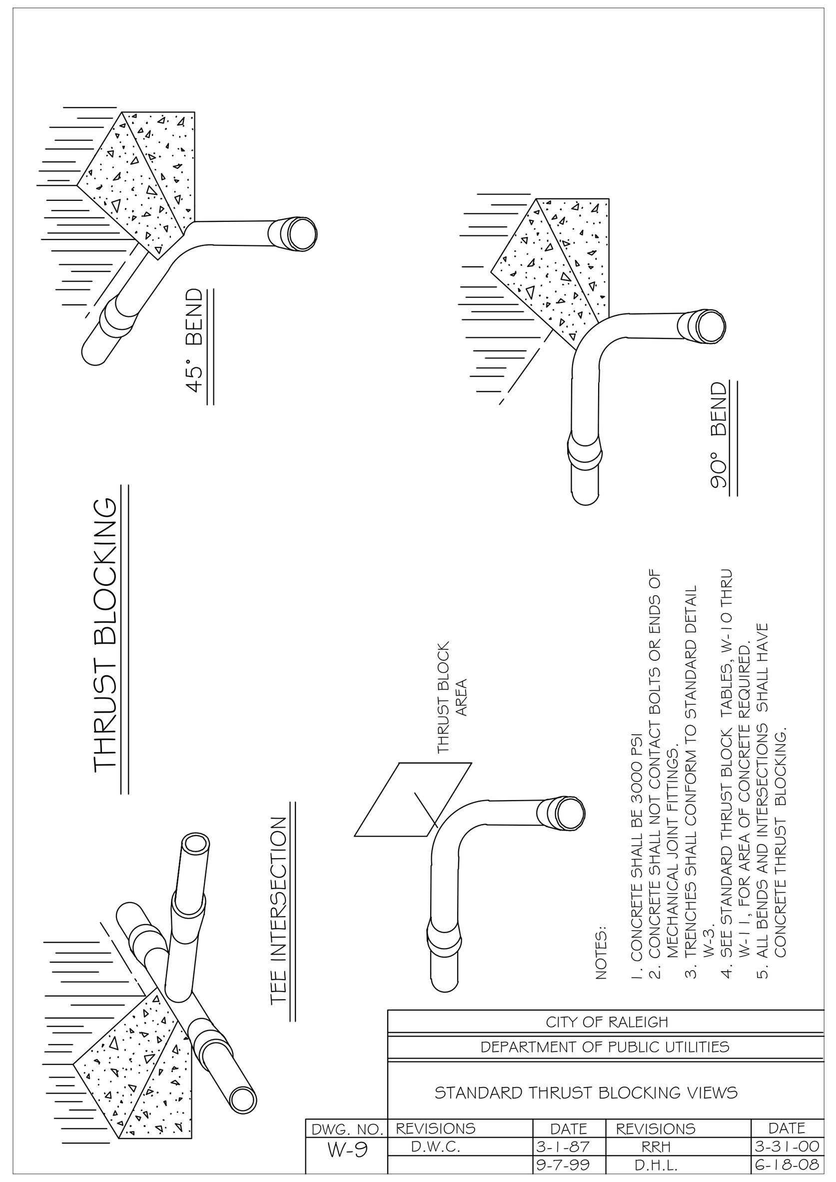

REACTION BEARING AREAS FOR HORIZONTAL WATER PIPE BENDS
BASED ON TEST PRESSURE OF 200 P.S.I.

ALL AREAS GIVEN IN SQUARE FEET.

SIZE AND DEGREE OF BEND	STATIC THRUST IN POUNDS	MODERATELY DRY CLAY 4000 LBS/FT²	SOFT CLAY 2000 LBS/FT²	1600 LBS/FT² GRAVEL / COARSE SAND	8000 LBS/FT² DRY CLAY - ALWAYS DRY	SAND, COMPACT FIRM 8000 LBS/FT²	SAND - CLEAN DRY 4000 LBS/FT²	SOIL 1000 LBS/FT² QUICKSAND - VERY POOR	ROCK - POOR 10,000 LBS/FT²
6"									
11 1/4°	1,108	1	1	1	1	1	1	2	1
22 1/2°	2,207	1	2	2	1	1	1	3	1
45°	4,328	2	3	3	1	1	2	5	1
90°	7,996	2	4	5	1	1	2	8	1
PLUG	5,655	2	3	4	1	1	2	6	1
8"									
11 1/4°	1,970	1	1	2	1	1	1	2	1
22 1/2°	3,922	1	2	3	1	1	1	4	1
45°	7,694	2	4	5	1	1	2	8	1
90°	14,215	4	8	9	2	2	4	15	2
PLUG	10,053	3	5	6	2	2	3	10	1
12"									
11 1/4°	4,433	2	3	3	1	1	2	5	1
22 1/2°	8,826	3	5	6	2	2	3	9	1
45°	17,312	5	9	11	3	3	5	18	2
90°	31,983	8	16	19	4	4	8	32	4
PLUG	22,619	6	12	14	3	3	6	23	3
16"									
11 1/4°	7,881	2	4	5	1	1	2	8	1
22 1/2°	15,691	4	8	10	2	2	4	16	2
45°	30,779	8	16	19	4	4	8	31	4
90°	56,861	15	29	35	8	8	15	57	6
PLUG	40,213	10	21	25	5	5	10	41	5

REACTION BEARING AREAS ARE IN SQUARE FEET MEASURED IN A VERTICAL PLANE IN THE TRENCH SIDE AT AN ANGLE OF 90° TO THE THRUST VECTOR.

USE 6" - 90 BEND VALUE FOR HYDRANTS FOR ADDITIONAL SAFETY FACTOR.

CITY OF RALEIGH
DEPARTMENT OF PUBLIC UTILITIES
THRUST BLOCKING DESIGN QUANTITY TABLE

DWG. NO.	REVISIONS	DATE	REVISIONS	DATE
W-10	D.W.C.	6-23-99		

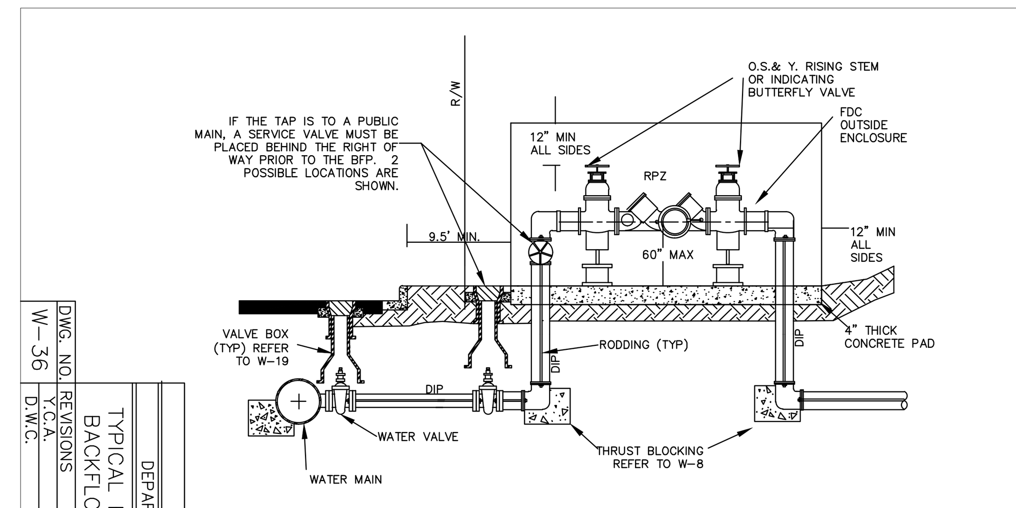

1. ALL ABOVE GROUND ENCLOSURES MUST HAVE ADEQUATE DRAINAGE (TWICE THE DIAMETER OF THE SUPPLY PIPE) TO DAYLIGHT ABOVE GRADE.
2. REDUCED PRESSURE BACKFLOW PRESENTERS MAY BE LOCATED IN A BUILDING PROVIDED THERE ARE NO OTHER UNPROTECTED TAPS BETWEEN THE MAIN AND THE BUILDING. DRAINAGE IN A BUILDING MUST BE TWICE THE DIAMETER OF THE SUPPY PIPE.
3. ABOVE GROUND INSULATED VAULTS MUST BE ASSE 1060 APPROVED ABOVE GROUND ENCLOSURES. SEE CROSS CONNECTION MANUAL FOR ENCLOSURE FREEZE PROTECTION AND CERTIFICATION REQUIREMENTS.
4. RESIDENTIAL LAWN IRRIGATION R.P. ASSEMBLIES THAT ARE REMOVED TO PREVENT FREEZING IN THE WINTER MONTHS MUST BE CAPPED OFF. ALL ABOVE GROUND ASSEMBLIES, EXCEPT RESIDENTIAL LAWN IRRIGATION ASSEMBLIES, MUST BE PROTECTED FROM FROST.
6. FOR ENCLOSURE DIMENSIONS SEE DETAIL W-34.
7. STEEL RODS AND BOLTS SHALL BE 3/4" HOT DIPPED GALVANIZED.
8. ALL ASSEMBLIES MUST BE ON THE CURRENT APPROVAL LIST.

CITY OF RALEIGH
DEPARTMENT OF PUBLIC UTILITIES
TYPICAL REDUCED PRESSURE ZONE BACKFLOW PREVENTER ASSEMBLY

DWG. NO.	REVISIONS	DATE	REVISIONS	DATE
W-36	Y.C.A.	12-31-91	A.B.B.	7-10-04
	D.W.C.	11-8-99	D.H.L.	6/18/08

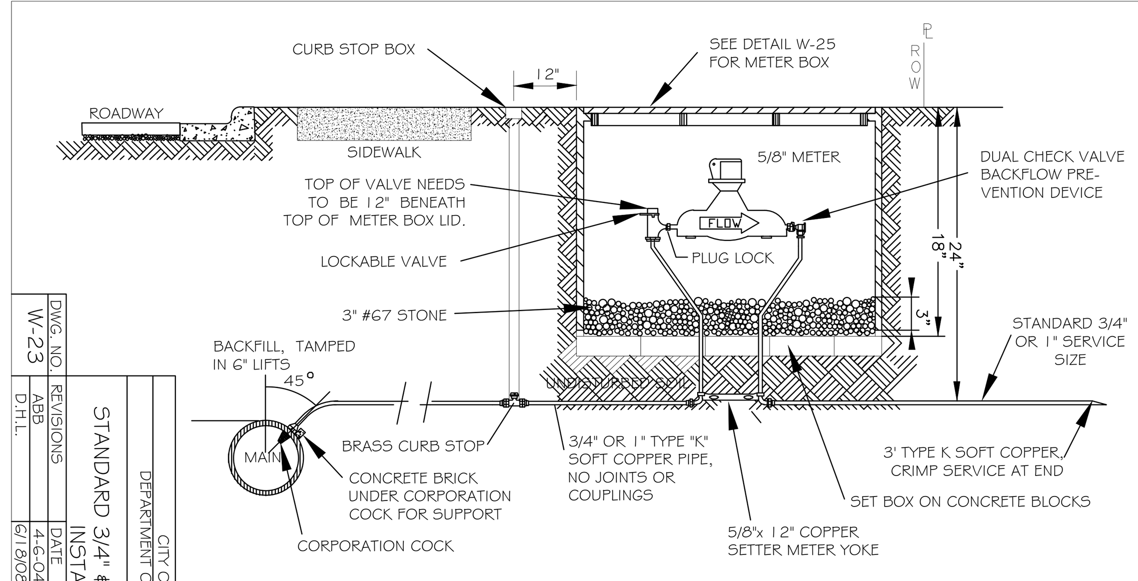

NOTES:
1. WATER METER AS MANUFACTURED BY SENSUS, OR SCHLUMBERGER.
2. DIRECT TAP ALLOWED ON MAINS NO LARGER THAN 16" LINE,
3. METER BOX TO BE LOCATED IN R/W ADJACENT TO PROPERTY OR IN APPROVED EASEMENT ADJACENT TO R/W.
4. WHEN THE GRADE CHANGES ON EXISTING SERVICES, A COPPER RESETTER CAN BE USED TO ADJUST TO GRADE. COPPER RESETTERS ARE PROHIBITED ON NEW SERVICES.
5. CURB STOP BOX SHALL HAVE PLUG STYLE LID WITH PENTAGON BOLT, 1-1/4" STEEL UPPER SECTION, AND ARCH STYLE BASE. STEEL STATIONARY ROD TO BE PROVIDED FOR CURB STOP OPERATION.

CITY OF RALEIGH
DEPARTMENT OF PUBLIC UTILITIES
STANDARD 3/4" & 1" WATER SERVICE INSTALLATION

DWG. NO.	REVISIONS	DATE	REVISIONS	DATE
W-23	ABB	4-6-04		
	D.H.L.	6/18/08		

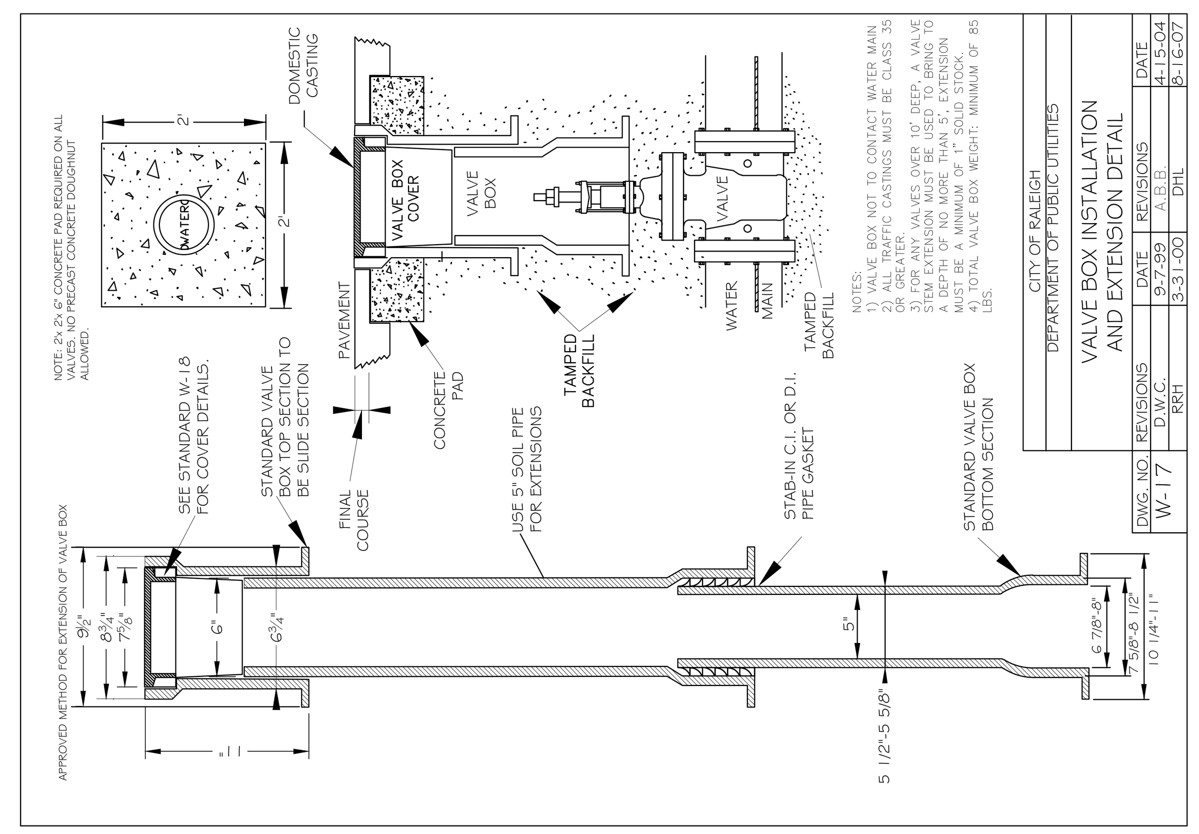

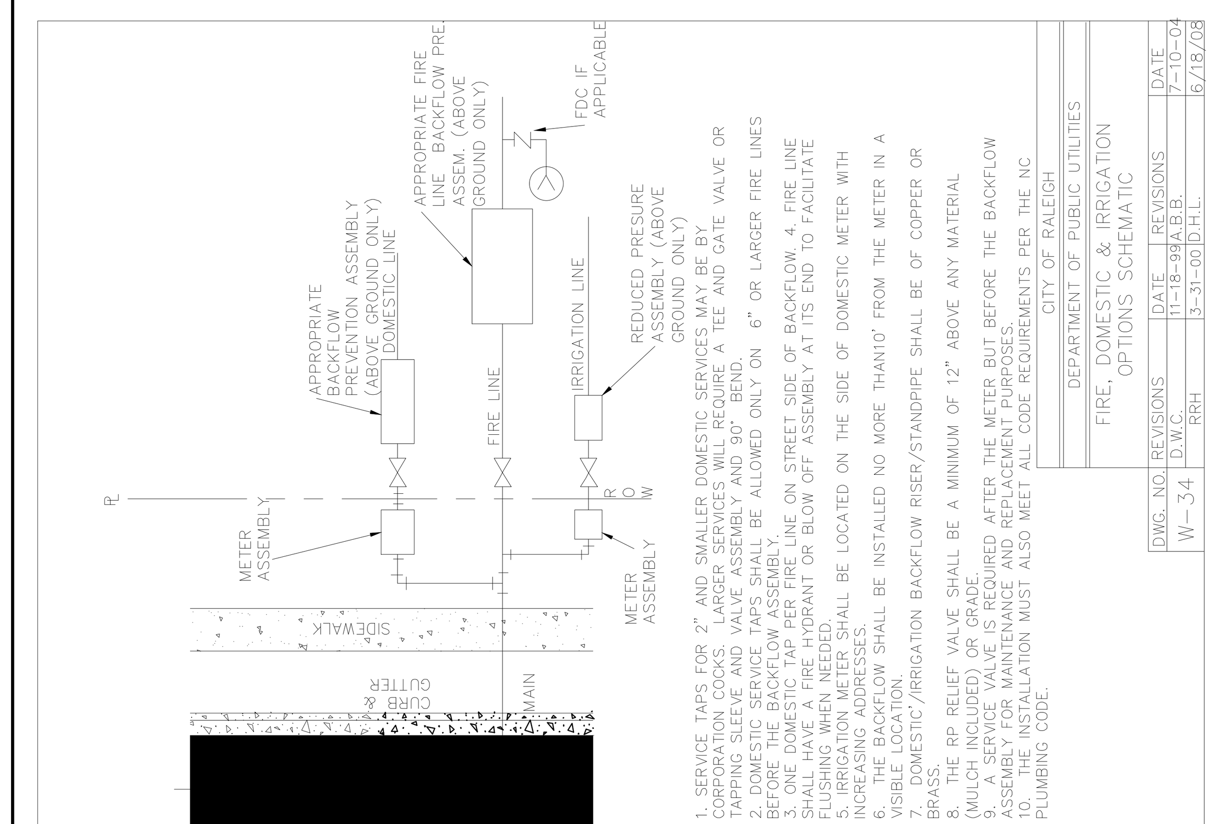

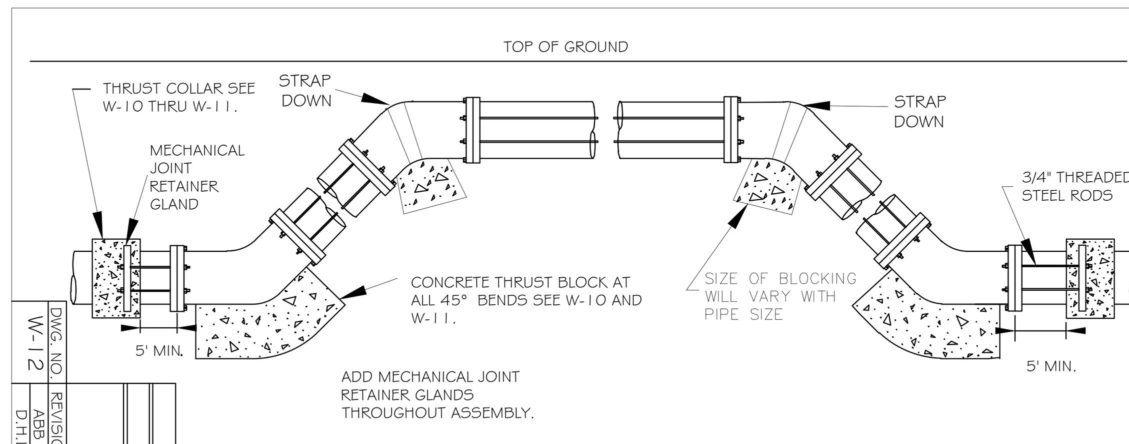

ROD REQUIREMENTS

SIZE OF 45 BEND	STATIC THRUST IN POUNDS	NO. OF RODS REQUIRED
6"	4,328	2
8"	7,694	4
12"	17,312	4
16"	30,779	8
24"	69,252	8

GENERAL NOTES:
1. STEEL RODS AND BOLTS SHALL BE 3/4" HOT DIPPED GALVANIZED.
2. CONCRETE SHALL NOT CONTACT BOLTS OR ENDS OF MECHANICAL JOINT BENDS.
3. RESTRAINED MECHANICAL GLANDS TO BE USED AT ALL FITTINGS.
4. MUST USE DUCTILE IRON EYE BOLTS WHERE NECESSARY.
5. 3' MINIMUM COVER MUST BE MAINTAINED ON ALL WATER MAINS

CITY OF RALEIGH
DEPARTMENT OF PUBLIC UTILITIES
STANDARD VERTICAL BEND

DWG. NO.	REVISIONS	DATE	REVISIONS	DATE
W-12	ABB	4-6-04	J.P.S.	11-1-10
	D.H.L.	6-18-08		

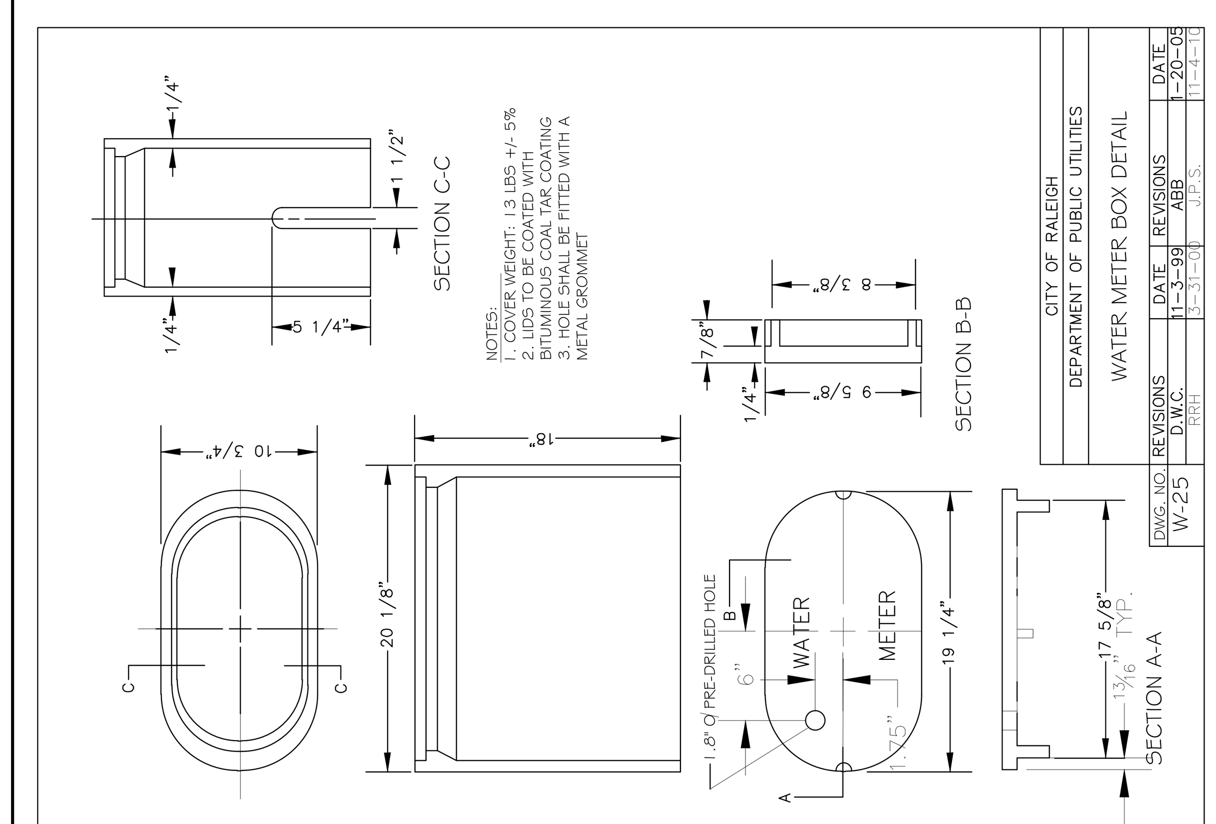

SITE PERMITTING APPROVAL

Water and Sewer Permits (if applicable)

The City of Raleigh consents to the connection and extension of the City's Public Sewer System as shown on this plan. The material and Construction methods used for this project shall conform to the standards and specifications of the City's Public Utilities Handbook. City of Raleigh Public Utilities Department Permit # S-

The City of Raleigh consents to the connection and extension of the City's Public Water System as shown on this plan. The material and Construction methods used for this project shall conform to the standards and specifications of the City's Public Utilities Handbook. City of Raleigh Public Utilities Department Permit # W-

The City of Raleigh consents to the connection to its public sewer system and extensions of the private sewer collection system as shown on this plan. The material and construction methods used for this project shall conform to the standards and specifications of the City's Public Utilities Handbook.
City of Raleigh Public Utilities Department Permit # S-

CITY OF RALEIGH - PLANS AUTHORIZED FOR CONSTRUCTION

Plans for the proposed use have been reviewed for general compliance with applicable codes. This limited review, and authorization for construction is not to be considered to represent total compliance with all legal requirements for development and construction. The property owner, design consultants, and contractors are each responsible for compliance with all applicable City, State and Federal laws. This specific authorization below is not a permit, nor shall it be construed to permit any violation of City, State or Federal Law. All Construction must be in accordance with all Local, State, and Federal Rules and Regulations.

Electronic Approval: This approval is being issued electronically. This approval is valid only upon the signature of a City of Raleigh Review Officer below. The City will retain a copy of the approved plans. Any work authorized by this approval must proceed in accordance with the plans kept on file with the City. This electronic approval may not be edited once issued. Any modification to this approval once issued will invalidate this approval.

City of Raleigh Development Approval ____________________
City of Raleigh Review Officer

#	DATE	DESCRIPTION
1	2-JAN-25	INITIAL SUBMITTAL FOR REVIEW

REVISIONS:

MISC. DETAILS

HALL OF FAME CAR WASH

WALLBROOK - LOT 8
Town of Rolesville Project No. SDP 25-01
US 401 Business / S. Main Street & Wall Creek Drive
Wake Forest Township, Town of Rolesville, Wake County, North Carolina

NC License: P-1199
ARK CONSULTING GROUP, PLLC
ENGINEERS & SURVEYORS
925-A Conference Drive
Greenville, NC 27858
(252) 558-0888
www.arkconsultinggroup.com

NORTH CAROLINA PROFESSIONAL SEAL 17170 ENGINEER BRIAN C. FAGUNDUS
PRELIMINARY Do Not Use for Construction
1/2/2025

Project Manager:	BCF
Drawn By:	DLC
Checked By:	TGN
Project Number:	24137
Drawing Number:	D-1525

C6.3

Date: January 2, 2025

D:\ARK DROPBOX\01 - PROJECTS\ACTIVE\CROSLAND SE\24137 - WALLBROOK - LOT 8\D - DWG\03 - FINAL\D-1525 - DT_LOT8A_HOF.DWG, 6.3, Lee Christman, Fri, Jan 03, 2025 @ 5:10 PM

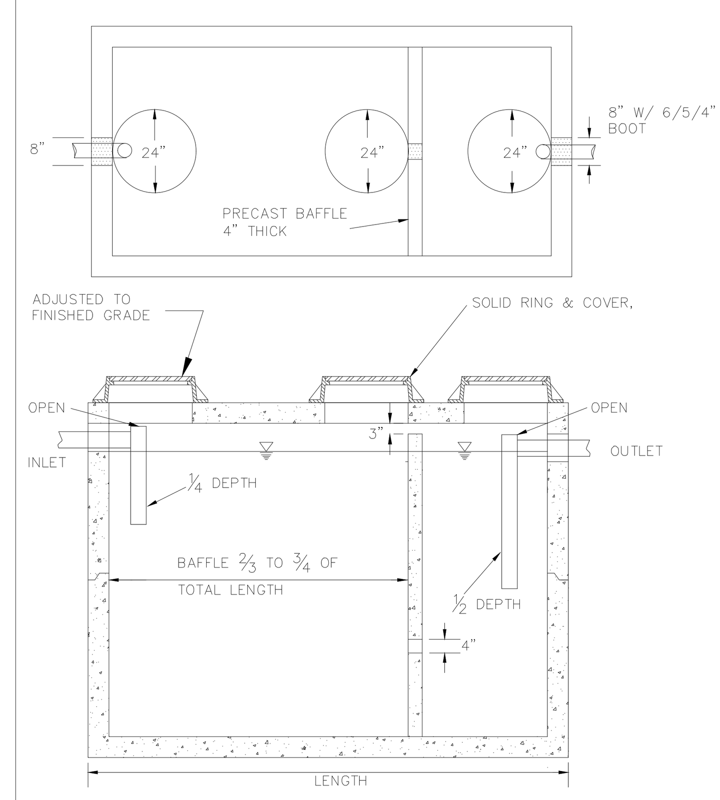

NOTES:
1. REINFORCEMENT: H-20 BRIDGE LOADING (TRAFFIC RATED)
2. CONCRETE: 4000 PSI @28 DAYS
3. EARTHCOVER: 0' TO 5' MAX.

CITY OF RALEIGH				
DEPARTMENT OF PUBLIC UTILITIES				
1000 GALLON GREASE INTERCEPTOR				
DWG. NO.	REVISIONS	DATE	REVISIONS	DATE
S-40	RRH	3/9/00	D.H.L.	6/18/08
	ABB	3/19/04		

LOCALLY AVAILABLE SIZES

INTERCEPTORS CAPACITY (GAL.)	SEPARATORS CAPACITY (GAL.)
300	1000
550	1200
750	1600
1000	
1200	
1500	
2000	
2500	
3000	
4000	
5000	
6000	
8000	

NOTES:

1. BAFFLE WALL LOCATED AT A DISTANCE FROM INLET WALL ⅔ TO ¾ OF THE TOTAL LENGTH OF THE INTERCEPTOR OR SEPARATOR AS SHOWN ON DETAIL S-40.
BAFFLE WALLS LOCATED AT A DISTANCE APPROXIMATELY OF ⅓ OF THE TOTAL LENGTH OF THE SEPARATOR AS SHOWN ON DETAIL S-40.01.
2. EACH INTERCEPTOR OR SEPARATOR SHALL HAVE INLET AND OUTLET TEES. THE OUTLET TEE SHALL EXTEND 50% INTO THE LIQUID DEPTH. THE INLET TEE SHALL EXTEND 25% INTO THE LIQUID DEPTH. INLET AND OUTLET TEES MUST BE OPEN TO ALLOW THE COLLECTION OF F.O.G. SAMPLE.
3. ACESS OPENINGS OVER EACH COMPARTMENT WITHIN THE INTERCEPTOR OR SEPARATOR SHALL BE 24 INCHES IN DIAMETER AND CONTAIN PICK HOLES. ALL COVERS SHALL BE CONSTRUCTED OF CAST IRON OR EQUIVALENT TRAFFIC BEARING MATERIAL. MANHOLE COVERS MUST EXTEND TO FINISH GRADE AND BE INSTALLED TO EXCLUDE THE ENTRANCE OF STORMWATER INTO THE INTERCEPTOR OR SEPARATOR.
4. FULL SIZE DUAL SWEEP CLEANOUTS SHALL BE INSTALLED ON THE INLET AND OUTLET SIDES OF THE INTERCEPTOR OR SEPARATOR.
5. INTERCEPTORS AND SEPARATORS MUST BE VENTED IN ACCORDANCE WITH THE NC STATE PLUMBING CODE.
6. CONCRETE: 4000 PSI @ 28 DAYS.
7. DESIGN: ACI 318 BUILDING CODE
ASTM C1613-06 FOR GREASE INTERCEPTORS
ASTM C913-02 FOR WATER AND WASTEWATER STRUCTURES
ASTM C890-06 FOR MINIMAL STRUCTURAL DESIGN LOADING
8. INTERCEPTORS AND SEPARATORS SHALL BE DESIGNED TO WITHSTAND AN H-20 WHEEL LOAD.
9. INTERCEPTORS OR SEPARATORS MADE OF POLYETHYLENE OR FIBERGLASS SHALL INCLUDE A MINIMUM 12,000 PSI TENSILE STRENGTH, 19,000 PSI FLEXURAL STRENGTH, AND 800,000 PSI FEXURAL MODULUS.
10. ALL INTERCEPTORS AND SEPARATORS SHALL BE INSTALLED IN ACCORDANCE WITH THE MANUFACTURERS SPECIFICATIONS.

CITY OF RALEIGH				
DEPARTMENT OF PUBLIC UTILITIES				
DIMENSIONS: GREASE INTERCEPTORS OIL-WATER-SAND SEPARATORS				
DWG. NO.	REVISIONS	DATE	REVISIONS	DATE
S-41	RRH	3/9/00	D.H.L.	6/18/08
	ABB	3/19/04		

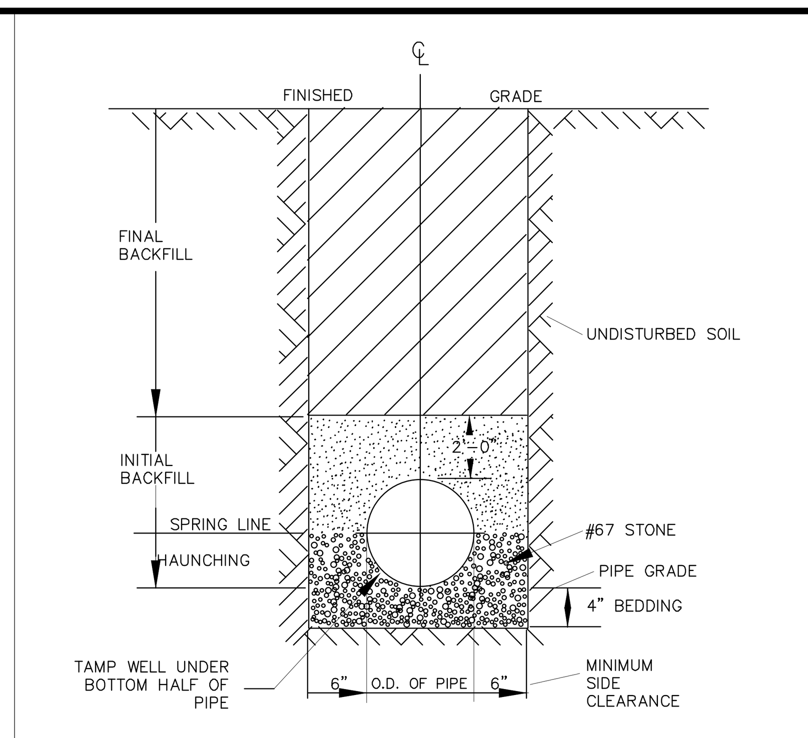

TYPICAL TRENCH BOTTOM DIMENSIONS FOR SDR 35 PVC GRAVITY PIPE

NOTES:
1. FOR TRENCHES REQUIRING SHORING AND BRACING, DIMENSIONS SHALL BE TAKEN FROM THE INSIDE FACE OF THE SHORING AND BRACING.
2. NO ROCKS OR BOULDERS 4" OR LARGER TO BE USED IN INITIAL BACKFILL.
3. ALL BACKFILL MATERIAL SHALL BE SUITABLE NATIVE MATERIAL.
4. BACKFILL SHALL BE TAMPED IN 6" LIFTS IN TRAFFIC AREAS, 12" IN NON-TRAFFIC AREAS.

CITY OF RALEIGH				
DEPARTMENT OF PUBLIC UTILITIES				
TRENCH BOTTOM DIMENSIONS AND BACKFILLING REQUIREMENTS FOR PVC GRAVITY SEWER MAIN				
DWG. NO.	REVISIONS	DATE	REVISIONS	DATE
S-5	TO NOTES	3-1-87	D.W.C.	9-3-99
		7-2-82	RRH	3-30-00

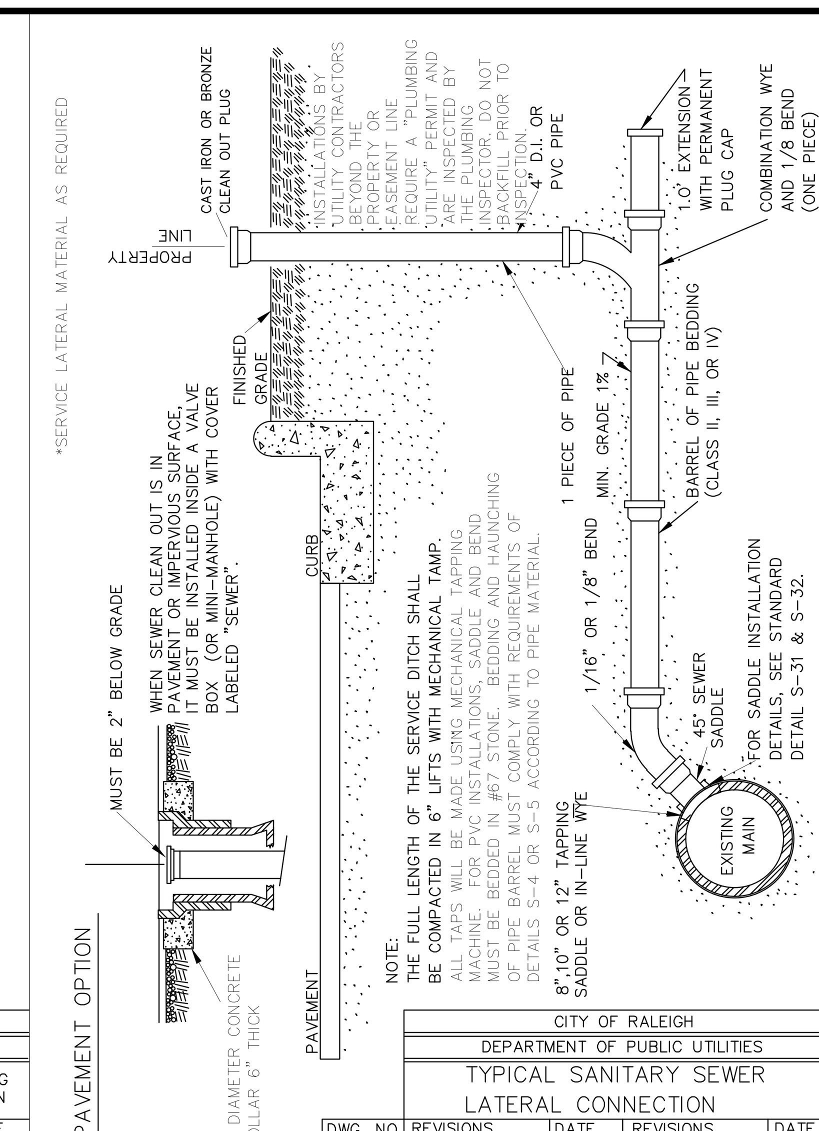

CITY OF RALEIGH				
DEPARTMENT OF PUBLIC UTILITIES				
TYPICAL SANITARY SEWER LATERAL CONNECTION				
DWG. NO.	REVISIONS	DATE	REVISIONS	DATE
S-30	Y.C.A.	6-92	A.B.B.	4-8-04
	RRH	3-30-00	D.H.L.	6-18-08

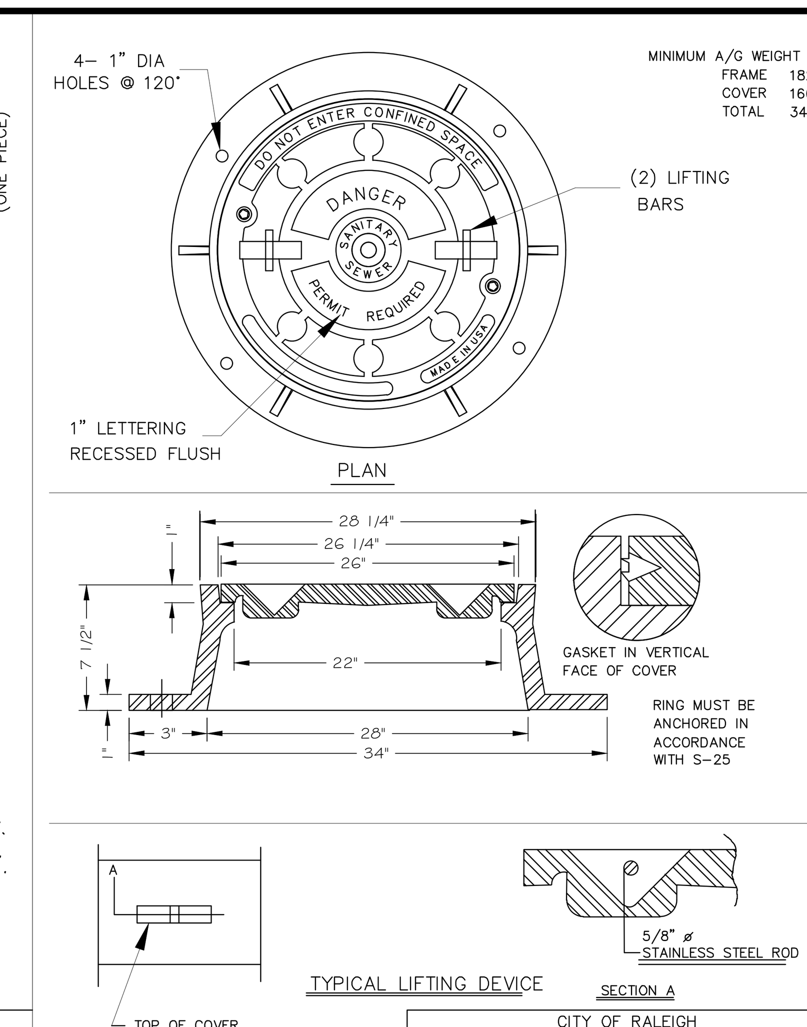

CITY OF RALEIGH				
DEPARTMENT OF PUBLIC UTILITIES				
MANHOLE FRAME AND WATERTIGHT COVER				
DWG. NO.	REVISIONS	DATE	REVISIONS	DATE
S-26	3-1-87	3-1-87	ABB	8-29-05
	RRH	3-30-00	D.H.L.	6/18/08

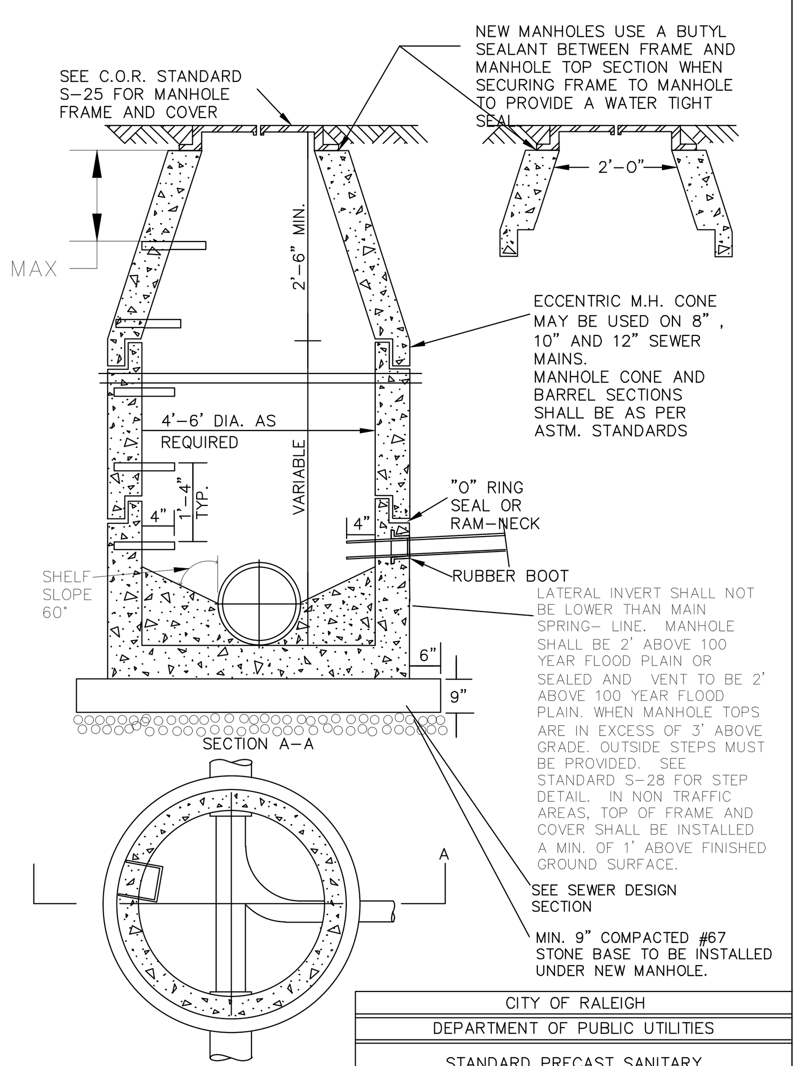

CITY OF RALEIGH				
DEPARTMENT OF PUBLIC UTILITIES				
STANDARD PRECAST SANITARY SEWER MANHOLE				
DWG. NO.	REVISIONS	DATE	REVISIONS	DATE
S-20	Y.C.A.	12-31-92	ABB	2-21-05
	RRH	3-30-00	D.H.L.	6-16-08

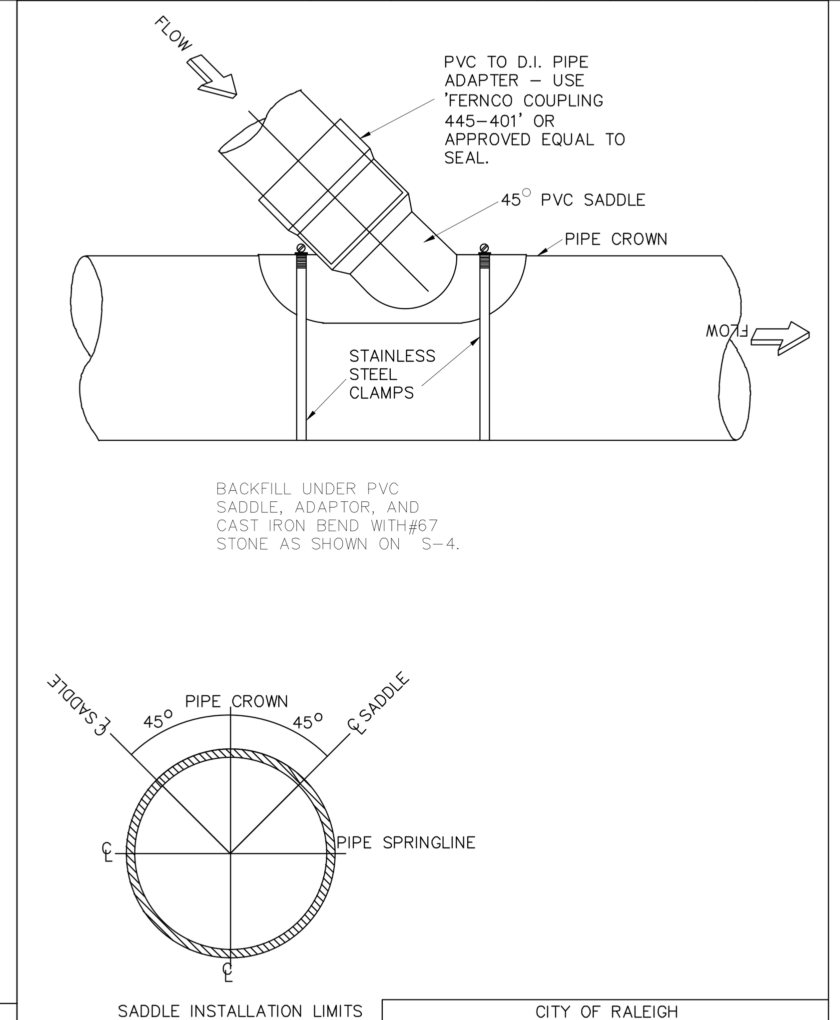

CITY OF RALEIGH				
DEPARTMENT OF PUBLIC UTILITIES				
LATERAL SADDLE INSTALLATION DETAIL FOR PVC PIPE				
DWG. NO.	REVISIONS	DATE	REVISIONS	DATE
S-31		3-1-87		
	RRH	3-30-00		

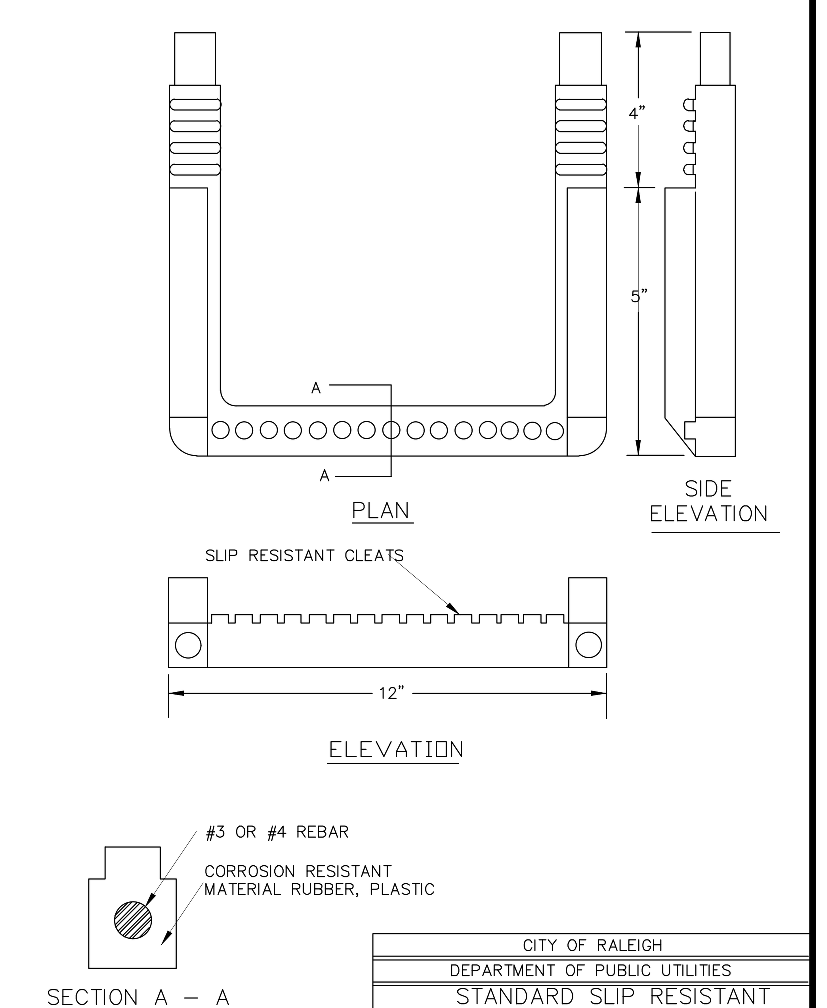

CITY OF RALEIGH				
DEPARTMENT OF PUBLIC UTILITIES				
STANDARD SLIP RESISTANT MANHOLE STEP DETAIL				
DWG. NO.	REVISIONS	DATE	REVISIONS	DATE
S-28	RRH	3-30-00		

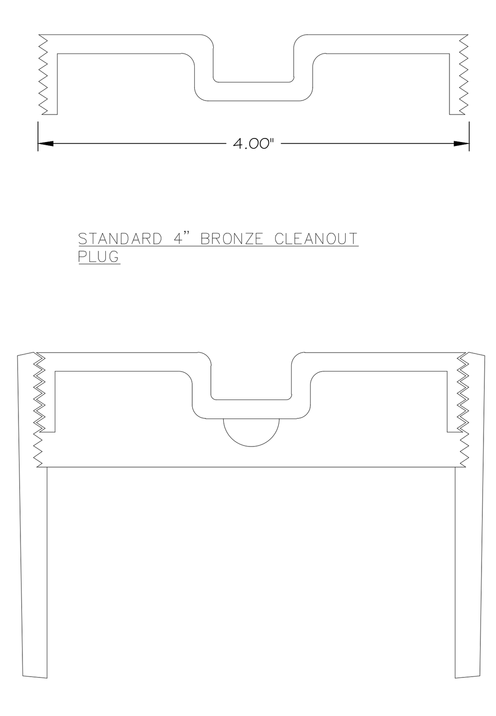

STYLES ACCEPTED:
INVERTED NUT
RAISED NUT

CITY OF RALEIGH				
DEPARTMENT OF PUBLIC UTILITIES				
4" CLEANOUT PLUG				
DWG. NO.	REVISIONS	DATE	REVISIONS	DATE
S-34		3-1-87	RRH	3-30-00
	D.W.C.	3-27-98		

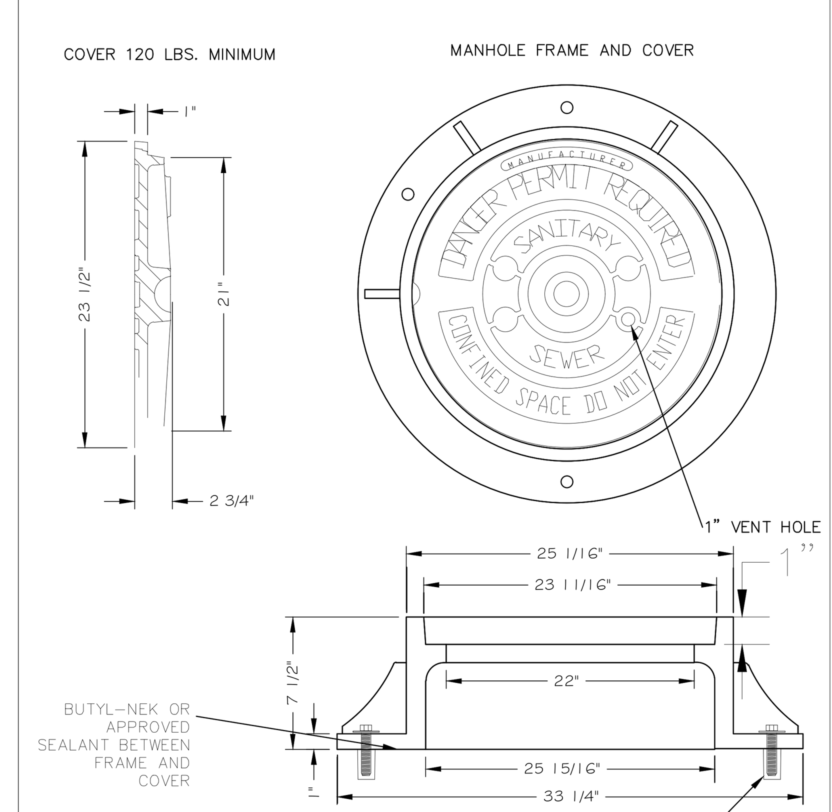

NOTES:
1) ALL MANHOLE FRAMES SHALL BE DOMESTICALLY CAST.
2) FRAME SHALL BE A MINIMUM WEIGHT OF 182 LBS. WITHIN PUBLIC ROW AND 160 LBS. WITHIN EASEMENTS.
3) COVER SHALL WEIGH A MIN. OF 120 LBS.
4) ALL MANHOLE FRAMES OUTSIDE OF PAVED SURFACES SHALL BE BOLTED TO THE CONE SECTION OR RING WITH A MINIMUM OF 4 BOLTS PER FRAME.

CITY OF RALEIGH				
DEPARTMENT OF PUBLIC UTILITIES				
STANDARD MANHOLE COVER				
DWG. NO.	REVISIONS	DATE	REVISIONS	DATE
S-25	3-1-87	3-1-87	A.B.B.	2-9-05
	RRH	3-30-00	D.H.L.	6-18-08

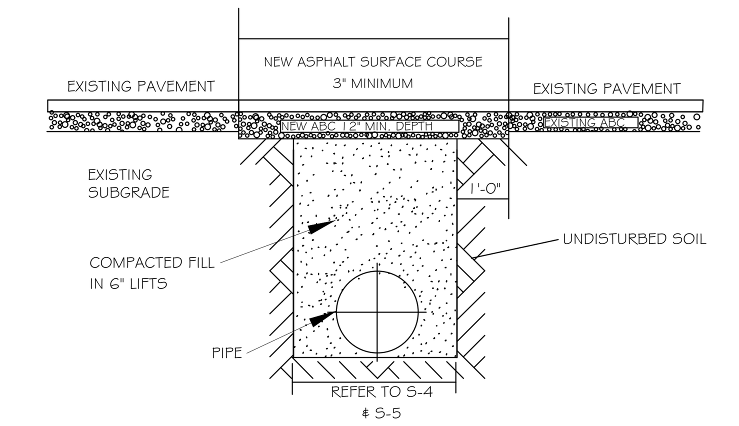

NOTES:
1. IN NCDOT MAINTAINED ROADWAYS ENCROACHMENT PAVEMENT PATCH REQUIREMENTS SHALL TAKE PRECEDENCE.
2. THE PAVEMENT CUT SHALL BE DEFINED BY A STRAIGHT EDGE AND CUT WITH AN APPROPRIATE SAWCUT MACHINE.
3. THE TRENCH SUBGRADE MATERIAL SHALL BE BACKFILLED WITH SUITABLE MATERIAL AND COMPACTED TO A DENSITY OF AT LEAST 95% OF THAT OBTAINED BY COMPACTING A SAMPLE OF THE MATERIAL IN ACCORDANCE WITH AASHTO T-99 AS MODIFIED BY NCDOT.
4. THE FINAL 1' OF FILL SHALL CONSIST OF ABC MATERIAL COMPACTED TO A DENSITY EQUAL TO 100% OF THAT OBTAINED BY COMPACTING A SAMPLE OF THE MATERIAL IN ACCORDANCE WITH AASHTO T-80 AS MODIFIED BY NCDOT.
5. THE ENTIRE THICKNESS AND VERTICAL EDGE OF CUT SHALL BE TACKED.
6. THE SAME DEPTH OF PAVEMENT MATERIAL WHICH EXISTS SHALL BE REINSTALLED, BUT IN NO CASE SHALL THE ASPHALT BE LESS THAN 3" THICK.
7. THE ASPHALT PAVEMENT MATERIAL SHALL BE INSTALLED AND COMPACTED THOROUGHLY WITH A SMOOTH DRUM ROLLER TO ACHIEVE A SMOOTH LEVEL PATCH.
8. REFER TO CITY OF RALEIGH STANDARDS FOR TRENCHES AND PIPE BEDDING (S-4 & S-5) FOR ADDITIONAL DETAILS.
9. NO HAND PATCHING ALLOWED.
10. PAVEMENT CUTS WITHIN NCDOT ROW SHALL CONFORM TO THE APPROVED ON SITE ENCROACHMENT PERMIT.

CITY OF RALEIGH				
DEPARTMENT OF PUBLIC UTILITIES				
STANDARD ASPHALT PAVEMENT PATCH DETAIL				
DWG. NO.	REVISIONS	DATE	REVISIONS	DATE
S-3	D.W.C.	11-1-99	A.B.B.	4-19-04
	RRH	3-30-00	J.P.S.	10-8-10

11 - City of Raleigh details are outdated. (New details dated January 2025 are available on COR website). Please update.

DETAILS UPDATED TO LATEST AVAILABLE.

SITE PERMITTING APPROVAL

Water and Sewer Permits (if applicable)

The City of Raleigh consents to the connection and extension of the City's Public Sewer System as shown on this plan. The material and Construction methods used for this project shall conform to the standards and specifications of the City's Public Utilities Handbook. City of Raleigh Public Utilities Department Permit # S-

The City of Raleigh consents to the connection and extension of the City's Public Water System as shown on this plan. The material and Construction methods used for this project shall conform to the standards and specifications of the City's Public Utilities Handbook. City of Raleigh Public Utilities Department Permit # W-

The City of Raleigh consents to the connection to its public sewer system and extensions of the private sewer collection system as shown on this plan. The material and construction methods used for this project shall conform to the standards and specifications of the City's Public Utilities Handbook. City of Raleigh Public Utilities Department Permit # S-

CITY OF RALEIGH - PLANS AUTHORIZED FOR CONSTRUCTION

Plans for the proposed use have been reviewed for general compliance with applicable codes. This limited review, and authorization for construction is not to be considered to represent total compliance with all legal requirements for development and construction. The property owner, design consultants, and contractors are each responsible for compliance with all applicable City, State and Federal laws. This specific authorization below is not a permit, nor shall it be construed to permit any violation of City, State or Federal Law. All Construction must be in accordance with all Local, State, and Federal Rules and Regulations.

Electronic Approval: This approval is being issued electronically. This approval is valid only upon the signature of a City of Raleigh Review Officer below. The City will retain a copy of the approved plans. Any work authorized by this approval must proceed in accordance with the plans kept on file with the City. This electronic approval may not be edited once issued. Any modification to this approval once issued will invalidate this approval.

City of Raleigh Development Approval ____________________
City of Raleigh Review Officer

#	DATE	DESCRIPTION
1	2-JAN-25	INITIAL SUBMITTAL FOR REVIEW

REVISIONS:

MISC. DETAILS

HALL OF FAME CAR WASH

WALLBROOK - LOT 8
Town of Rolesville Project No. SDP 25-01
US 401 Business / S. Main Street & Wall Creek Drive
Wake Forest Township, Town of Rolesville, Wake County, North Carolina

NC License: P-1199
ARK CONSULTING GROUP, PLLC
ENGINEERS & SURVEYORS
925-A Conference Drive
Greenville, NC 27858
(252) 558-0888
www.arkconsultinggroup.com

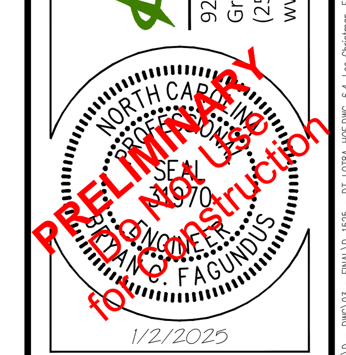

Project Manager:	BCF
Drawn By:	DLC
Checked By:	TGN
Project Number:	24137
Drawing Number:	D-1525

C6.4

Date: January 2, 2025

D:\ARK DROPBOX\01 - PROJECTS\ACTIVE\CROSLAND SE\24137 - WALLBROOK - LOT 8\D - DWG\03 - FINAL\D-1525 - D1_LOT8A_HOF.DWG, 6.4, Lee Christman, Fri, Jan 03, 2025 @ 5:10 PM

MATERIAL IMAGE GUIDE

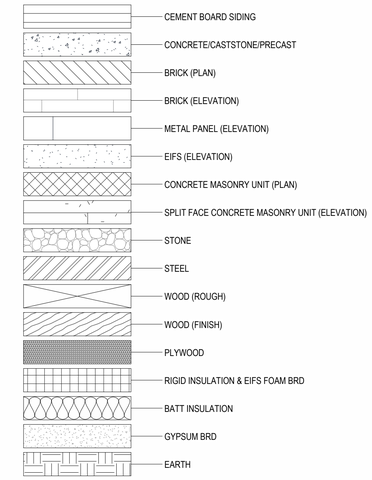

NOTE: MATERIALS SHOWN ON THE MATERIAL IMAGE GUIDE MAY NOT BE USED IN THE PROJECT

3 NORTH ELEVATION (PUBLIC R/W)
1/8" = 1'-0"

4 EAST ELEVATION
1/8" = 1'-0"

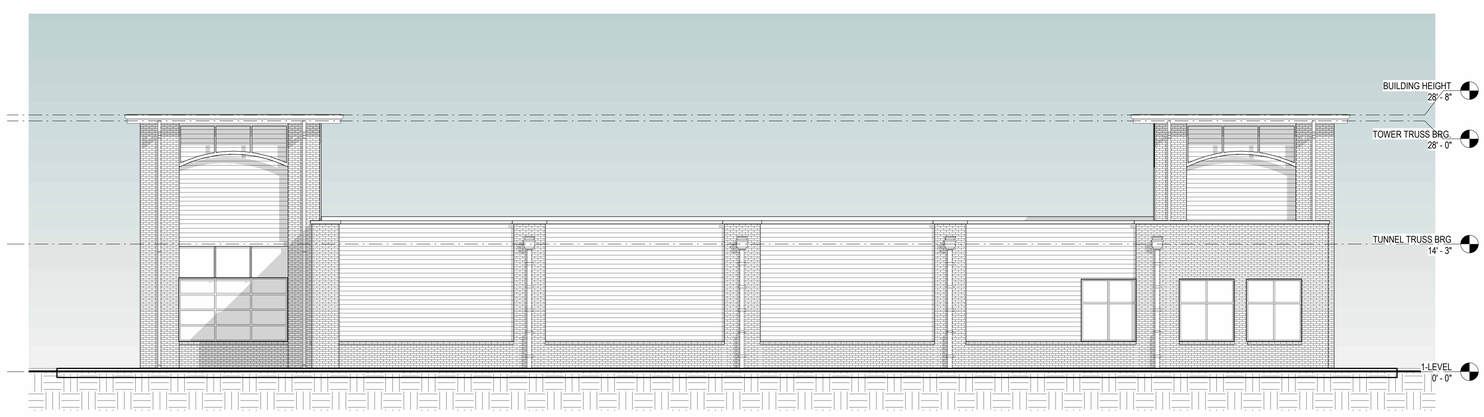

2 SOUTH ELEVATION (REAR)
1/8" = 1'-0"

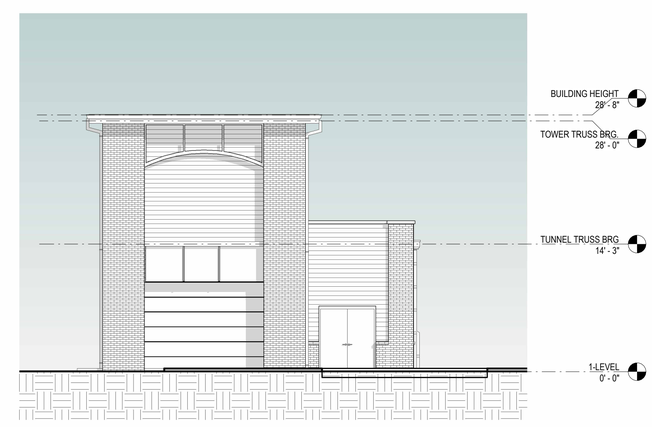

1 WEST ELEVATION (FACES ROAD)
1/8" = 1'-0"

designdevelopment
ARCHITECTS
800 Salem Woods Drive, Suite 102
Raleigh, NC 27615
919.848.4414
...drawing out your vision

REVIEW SET
NOT FOR
CONSTRUCTION

HALL OF FAME CAR WASH
SOUTH MAIN STREET ROLESVILLE NC

THE DRAWINGS & DESIGN SHOWN ARE THE PROPERTY OF DESIGN DEVELOPMENT. THE REPRODUCTION OR USE OF THIS PROPERTY W/O THE WRITTEN CONSENT OF THE ARCHITECT IS PROHIBITED AND AN INFRINGEMENT OF THESE RIGHTS IS SUBJECT TO LEGAL ACTION.

No.	Description	Date

PROJECT #: 240068

DATE: 1/2/2025

ELEVATIONS

A2.10

1/4" 1/2" 1" 2"

DIGITAL PRINT DATE: 1/2/2025 3:07:00 PM

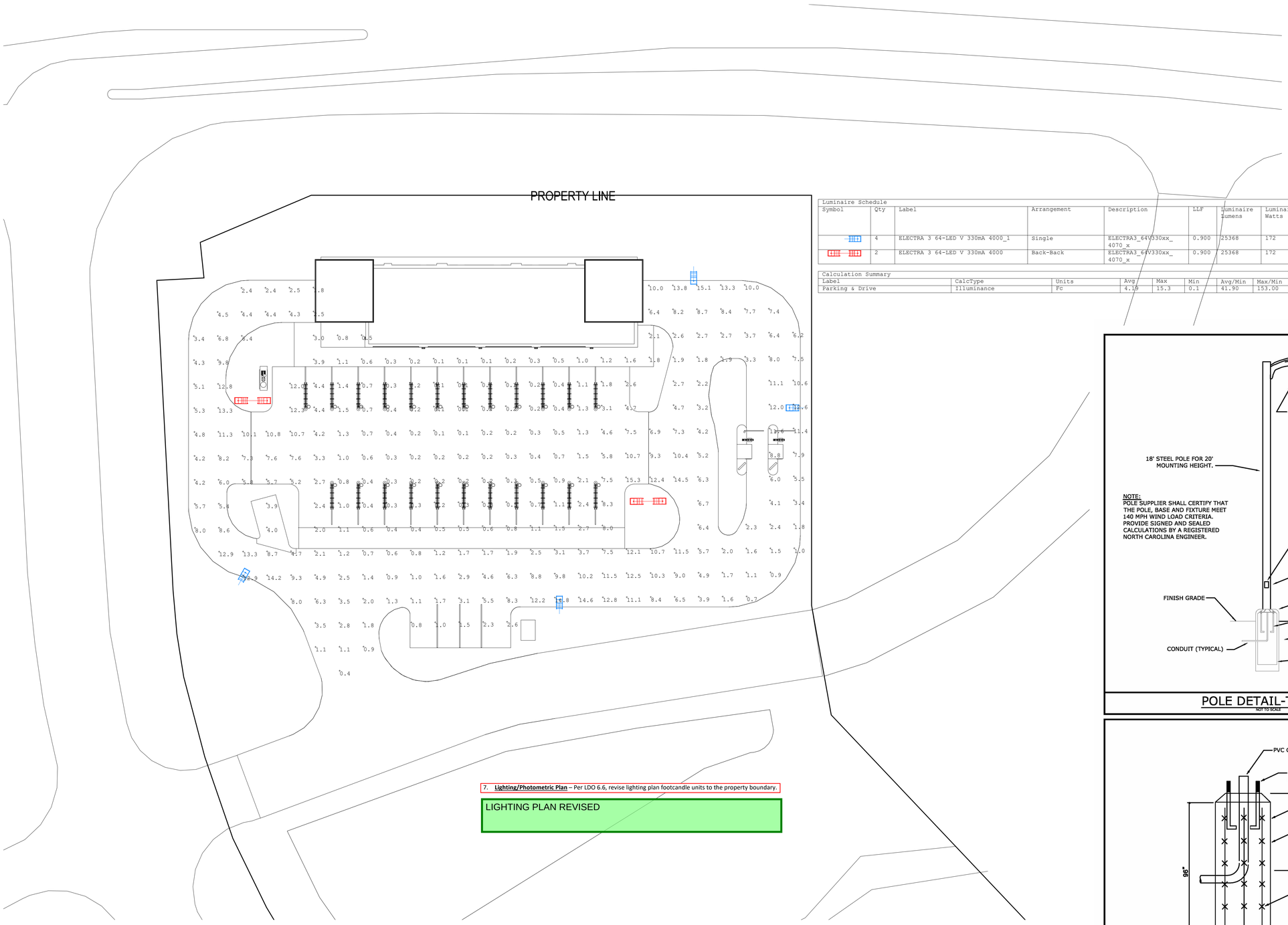

Luminaire Schedule									
Symbol	Qty	Label	Arrangement	Description	LLF	Luminaire Lumens	Luminaire Watts	Total Watts	Arrangement Watts
	4	ELECTRA 3 64-LED V 330mA 4000_1	Single	ELECTRA3_64V330xx_4070_x	0.900	25368	172	688	172
	2	ELECTRA 3 64-LED V 330mA 4000	Back-Back	ELECTRA3_64V330xx_4070_x	0.900	25368	172	688	344

Calculation Summary							
Label	CalcType	Units	Avg	Max	Min	Avg/Min	Max/Min
Parking & Drive	Illuminance	FC	4.19	15.3	0.1	41.90	153.00

7. **Lighting/Photometric Plan** – Per LDO 6.6, revise lighting plan footcandle units to the property boundary.

LIGHTING PLAN REVISED

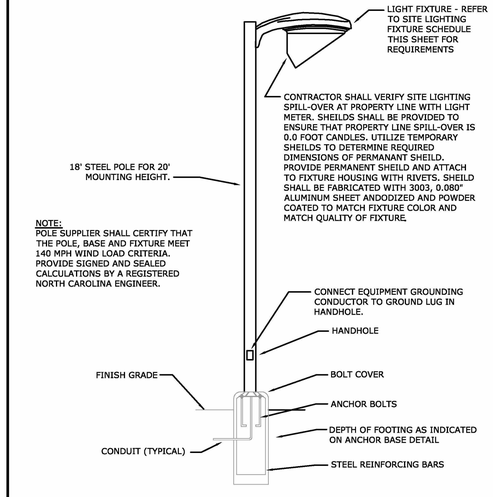

POLE DETAIL-TYPICAL

NOT TO SCALE

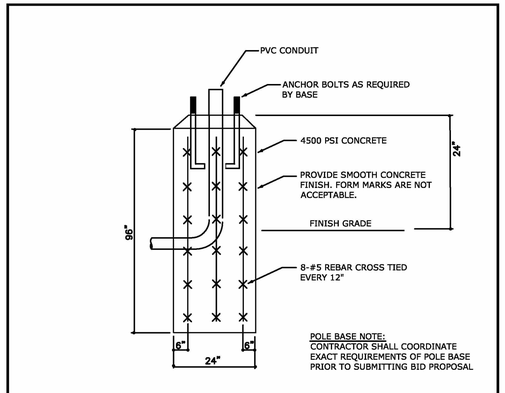

POLE ANCHOR BASE DETAIL

NOT TO SCALE

1 **PHOTOMETRIC SITE PLAN**
1" = 20'-0"

designdevelopment
ARCHITECTS
800 Salem Woods Drive, Suite 102
Raleigh, NC 27615
919.848.4474
...drawing out your vision

REVIEW SET NOT FOR CONSTRUCTION

HALL OF FAME CAR WASH
SOUTH MAIN STREET ROLESVILLE NC

THE DRAWINGS & DESIGN SHOWN ARE THE PROPERTY OF DESIGN DEVELOPMENT. THE REPRODUCTION OR USE OF THIS PROPERTY W/O THE WRITTEN CONSENT OF THE ARCHITECT IS PROHIBITED AND AN INFRINGEMENT OF THEIR RIGHTS & SUBJECT TO LEGAL ACTION.

No.	Description	Date

PROJECT #: 240068

DATE: 1/2/2025

PHOTOMETRIC SITE PLAN

A1.01

1/4" 1/2" 1" 2"

DIGITAL PRINT DATE: 1/2/2025 2:56:07 PM

GENERAL NOTES:

1. THIS ALTA/NSPS LAND TITLE SURVEY WAS PREPARED FOR THE BENEFIT OF WALLBROOK LANDCO, LLC, ITS SUCCESSORS AND/OR ASSIGNS AS THEIR INTERESTS MAY APPEAR, AND INVESTORS TITLE INSURANCE COMPANY.
2. THE PROPERTY AS SHOWN HEREON IS BASED ON A FIELD-RUN BOUNDARY SURVEY WITH A RAW CLOSURE OF 1:34,600.
3. THE IMPROVEMENTS SHOWN HEREON ARE BASED ON A FIELD-RUN PLANIMETRIC SURVEY PERFORMED BY JOHNSON, MIRMIRAN & THOMPSON FROM DECEMBER 2019 THROUGH MARCH 2020 AND REFLECTS SITE CONDITIONS AS OF THAT DATE.
4. ELEVATIONS ARE BASED ON NAVD88 DATUM.
5. THE SURVEY IS REFERENCED TO THE NORTH CAROLINA STATE PLANE COORDINATE SYSTEM (NCSPCS), NORTH AMERICAN DATUM, 1983, 2001 ADJUSTMENT, NAD83(2001).
6. THE USE OF THE WORD CERTIFY OR CERTIFICATION CONSTITUTES AN EXPRESSION OF PROFESSIONAL OPINION REGARDING THOSE FACTS OR FINDINGS WHICH ARE THE SUBJECT OF THE UNDERSIGNED PROFESSIONAL'S KNOWLEDGE, INFORMATION AND BELIEF, AND IN ACCORDANCE WITH THE COMMONLY ACCEPTED PROCEDURE CONSISTENT WITH THE APPLICABLE STANDARDS OF PRACTICE AND DOES NOT CONSTITUTE A WARRANTY OR GUARANTEE EITHER EXPRESSED OR IMPLIED.
7. THE SUBJECT PROPERTY IS LOCATED IN FLOOD ZONE X, AREA OF MINIMAL FLOODING, AS SHOWN ON NATIONAL FLOOD INSURANCE RATE MAP (FIRM), WAKE COUNTY, NORTH CAROLINA, PANEL 1758, MAP NO. 3720175800J, EFFECTIVE DATE: MAY 2, 2006.
8. AT THE TIME OF THE SURVEY, THERE WERE NO PARKING SPACES.
9. AT THE TIME OF THE SURVEY, THERE WAS NO OBSERVABLE EVIDENCE OF THE SITE BEING USED AS A SOLID WASTE DUMP, SUMP OR LANDFILL.
10. AT THE TIME OF THE SURVEY, THERE WAS NO OBSERVABLE EVIDENCE OF A CEMETERY.
11. AT THE TIME OF THE SURVEY, THERE WAS NO OBSERVABLE EVIDENCE OF BUILDING CONSTRUCTION OR BUILDING ADDITIONS.

AREA TABULATION

PARCEL	PIN#	NET (AC.)	GROSS (AC.)
A	1758-48-9229	0.828	0.828
B	1758-58-2090	10.742	11.168
C	1758-56-8976	42.324	44.100
D	1758-45-8905	15.024	15.024
	TOTALS:	68.918	71.120

MATCH LINE

RECORD LEGAL DESCRIPTIONS FOR TAX PARCELS 1758-48-9229 & 1758-58-2090:

PER INVESTORS TITLE INSURANCE COMPANY, TITLE COMMITMENT NO. 201800776CA2, WITH AN EFFECTIVE DATE OF SEPTEMBER 14, 2018 AT 5:00 P.M.

IN THE STATE OF NC, COUNTY OF WAKE,

PARCEL ONE (REID #: 0224145) (PIN #1758-58-2090) (PARCEL 'B'):

BEING LOT 2-3, CONTAINING 10.723 NET ACRES, AS THE SAME IS SHOWN ON THAT PLAT RECORDED IN BOOK OF MAPS 1996, PAGE 1582, WAKE COUNTY REGISTRY.

PARCEL TWO (REID #: 0092211) (PIN #1758-48-9229) (PARCEL 'A'):

BEING THAT PARCEL DESCRIBED AS FOLLOWS:

BEGINNING AT A STAKE IN THE EDGE OF THE ROLESVILLE-WALKERS CROSSROAD ROAD, CORNER OF O. V. WIGGINS; THENCE IN A SOUTHWESTERN DIRECTION ABOUT 300 FEET TO A STAKE AND W. H. MARSHALL'S LINE; THENCE IN A NORTHWESTERN DIRECTION 246 FEET WITH MARSHALL'S LINE TO THE EDGE OF THE ROAD; THENCE IN AN EASTERN DIRECTION WITH SAID ROAD ABOUT 410 FEET TO THE POINT OF BEGINNING, CONTAINING 8/10 OF AN ACRE BY ESTIMATION. BEING A PART OF THE LAND FORMERLY OWNED BY JAMES WALL.

RECORD LEGAL DESCRIPTIONS FOR TAX PARCELS 1758-56-8976 & 1758-45-8905:

PER INVESTORS TITLE INSURANCE COMPANY, TITLE COMMITMENT NO. 201800751CA2, WITH AN EFFECTIVE DATE OF SEPTEMBER 10, 2018 AT 5:00 P.M.

IN THE STATE OF NC, COUNTY OF WAKE,

TRACT 1 (PIN #1758-56-8976) (PARCEL 'C'):

BEING ALL OF TRACT 2A (2.894 ACRES) AND TRACT 3 (41.221 ACRES) AS SHOWN ON PLAT ENTITLED "RECOMBINATION SURVEY FOR TOMMY TWITTY" DATED NOVEMBER 17, 1995, PREPARED BY W. GRAHAM HAWTHORNE, JR., RLS AND RECORDED IN BOOK OF MAPS 1995, PAGE 2034, WAKE COUNTY REGISTRY.

LESS AND EXCEPT FROM TRACT 1 THAT 0.175 ACRE PORTION AS CONVEYED TO THE NORTH CAROLINA DEPARTMENT OF TRANSPORTATION IN DEED RECORDED IN BOOK 14395, PAGE 2080, WAKE COUNTY REGISTRY.

TRACT 2 (PIN #1758-45-8905) (PARCEL 'D'):

BEING ALL OF TRACT 2 (15.057 ACRE) AS SHOWN ON PLAT ENTITLED "RECOMBINATION MAP OF BOBBY L. MURRAY TRUST, TRACTS 1 & 2" DATED NOVEMBER 7, 2002, PREPARED BY MICHAEL D. GOODFRED, RLS, AND RECORDED IN BOOK OF MAPS 2005, PAGES 1195 AND 1196, WAKE COUNTY REGISTRY.

LESS AND EXCEPT FROM TRACT 2 THAT 0.03 ACRE PORTION AS CONVEYED TO CARLTON GROUP OF NORTH CAROLINA, LLC IN DEED RECORDED IN BOOK 13993, PAGE 2591, WAKE COUNTY REGISTRY.

SCHEDULE B, PART II EXCEPTIONS:

PER INVESTORS TITLE INSURANCE COMPANY, TITLE COMMITMENT NO. 201800776CA2, WITH AN EFFECTIVE DATE OF SEPTEMBER 14, 2018 AT 5:00 P.M.

1. (ITEM 3) MATTERS SHOWN ON RECORDED BOOK OF MAPS 1996 AT PAGE 1582 SHOWS THE FOLLOWING LOCATED ON THE LAND:
   (a) OVERHEAD LINES [PLOTTED HEREON]
   (b) POWER POLE [PLOTTED HEREON]
   (c) RIGHT OF WAY FOR U.S. HWY 401 LOUISBURG ROAD [PLOTTED HEREON]
2. (ITEM 4) EASEMENT(S) AND/OR RIGHT(S) OF WAY RECORDED IN BOOK 3868 AT PAGE 917 (PARCEL ONE). [PLOTTED HEREON]

SCHEDULE B, PART II EXCEPTIONS:

PER INVESTORS TITLE INSURANCE COMPANY, TITLE COMMITMENT NO. 201800751CA2, WITH AN EFFECTIVE DATE OF SEPTEMBER 10, 2018 AT 5:00 P.M.

3. (ITEM 2) TITLE TO THAT PORTION OF THE LAND WITHIN THE RIGHT-OF-WAY OF U.S. HIGHWAY 401 (LOUISBURG ROAD). [PLOTTED HEREON]
4. (ITEM 3) RIGHTS OF OTHERS THERETO ENTITLED IN AND TO THE CONTINUED UNINTERRUPTED FLOW OF THE CREEK, LOCATED ON THE LAND. [CREEK LOCATION PLOTTED HEREON]
5. (ITEM 4) ELECTRIC LINE RIGHT-OF-WAY EASEMENT TO WAKE ELECTRIC MEMBERSHIP CORPORATION RECORDED IN BOOK 3868 AT PAGE 917. [PLOTTED HEREON]

AS TO TRACT 1 ONLY (PIN #1758-56-8976):

6. (ITEM 8) SUBJECT TO MATTERS SHOWN ON RECORDED BOOK OF MAPS 1995 AT PAGE 2034 SHOWS THE FOLLOWING LOCATED ON THE LAND:
   (a) OVERHEAD LINE [PLOTTED HEREON]
   (b) POWER POLE [PLOTTED HEREON]
7. (ITEM 9) EASEMENT(S) TO WAKE ELECTRIC MEMBERSHIP CORPORATION RECORDED IN BOOK 863 AT PAGES 211 AND 212. [BLANKET EASEMENT - EXISTING ELECTRIC LINES PLOTTED HEREON]
8. (ITEM 10) RURAL LINE PERMIT TO CAROLINA TELEPHONE AND TELEGRAPH COMPANY RECORDED IN BOOK 1338 AT PAGES 143 AND 145. [LOCATIONS CANNOT BE DETERMINED FROM THE RECORD DOCUMENT, EXISTING POLES AND GUY WIRES PLOTTED HEREON]
9. (ITEM 11) SLOPE EASEMENT RECORDED IN BOOK 14395 AT PAGE 2087 AS SHOWN ON PLAT RECORDED IN BOOK OF MAPS 2011 AT PAGE 383. [PLOTTED HEREON]

AS TO TRACT 2 ONLY (PIN #1758-45-8905):

10. SUBJECT TO MATTERS SHOWN ON RECORDED BOOK OF MAPS 2005 AT PAGES 1195 AND 1196 SHOWS THE FOLLOWING LOCATED ON THE LAND:
    (a) UNDERGROUND SEWER MAIN MARKER [NOT FOUND]
    (b) POWER BOX [NOT FOUND]
    (c) RIGHTS OF OTHERS IN AND TO THE USE OF THE SOIL PATH (TO BE ABANDONED) [PATH NO LONGER VISIBLE]
11. (ITEM 13) DEED OF EASEMENT WITH GENERAL WARRANTY FOR WATERLINE EASEMENT TEMPORARY CONSTRUCTION EASEMENT RECORDED IN BOOK 16679 AT PAGE 132. [WATERLINE EASEMENT PLOTTED HEREON, TEMPORARY CONSTRUCTION EASEMENT NOT PLOTTED]
12. (ITEM 14) SANITARY SEWER EASEMENT RECORDED IN BOOK 10071 AT PAGE 2179 AS SHOWN ON PLAT RECORDED IN BOOK OF MAPS 2003 AT PAGE 647. [PLOTTED HEREON]
13. (ITEM 15) RESERVATION OF EASEMENT RECORDED IN BOOK 13993 AT PAGE 2591. [PLOTTED HEREON]
14. (ITEM 16) TITLE TO THAT PORTION OF THE LAND WITHIN THE RIGHT-OF-WAY OF S.R. 2226. [RIGHT OF WAY OF S.R. 2226 PLOTTED HEREON - PROPERTY DOES NOT EXTEND INTO RIGHT OF WAY]
15. (ITEM 17) RIGHT OF WAY AGREEMENT TO STATE HIGHWAY COMMISSION RECORDED IN BOOK 2052 AT PAGE 545. [RIGHT OF WAY OF S.R. 2226 PLOTTED HEREON]
16. (ITEM 18) RIGHTS OF OTHERS THERETO ENTITLED IN AND TO THE CONTINUED UNINTERRUPTED FLOW OF BRANCH/CREEK, LOCATED ON THE LAND. [BRANCH/CREEK LOCATION PLOTTED HEREON]

CURRENT ZONING SETBACK REQUIREMENTS:

TAX PARCEL 1758-48-9229: R-1 (SINGLE FAMILY RESIDENTIAL)
TAX PARCEL 1759-58-2090: R-1-SUD (SINGLE FAMILY RESIDENTIAL SPECIAL USE DISTRICT)
TAX PARCEL 1758-56-8976: CO-SUD (COMMERCIAL OUTLYING SPECIAL USE DISTRICT)
TAX PARCEL 1758-45-8905: CO-SUD

	FRONT	SIDE	CORNER	REAR	
R-1	30'	12'	22'	25'	(SETBACKS INCLUDE SPECIAL USE DISTRICTS)
CO	20'	15'	25'	35'	

NOTE: ZONING INFORMATION BASED ON INFORMATION AS SUPPLIED BY CURRENT COUNTY ZONING DEPARTMENT, NO ZONING REPORT OR LETTER WAS PROVIDED TO SURVEYOR AT TIME OF SURVEY.

MATCH LINE

NEW LEGAL DESCRIPTIONS

PARCEL 'A' (PIN #1758-48-9229)

ALL THAT CERTAIN REAL PROPERTY SITUATED IN THE TOWN OF ROLESVILLE, COUNTY OF WAKE, STATE OF NORTH CAROLINA, DESCRIBED AS FOLLOWS:

BEGINNING AT A FOUND IRON PIPE MARKING THE NORTHWEST CORNER OF LOT 2-3 AS SAID LOT IS SHOWN AND SO DESIGNATED ON THAT CERTAIN PLAT ENTITLED "RECOMBINATION SURVEY FOR TOMMY TWITTY, TRACTS 2-2 & 2-3, TWITTY PROP.", BY W. GRAHAM CAWTHORNE, JR., RLS, DATED NOVEMBER 17, 1995, REVISED JANUARY 12, 1996 AND RECORDED IN BOOK OF MAPS 1996, PAGE 1582, WAKE COUNTY RECORDS, SAID PIPE ALSO BEING ON THE EAST LINE OF TRACT #3 AS SAID TRACT IS SHOWN AND SO DESIGNATED ON THAT CERTAIN PLAT ENTITLED "W. H. MARSHALL ESTATE", BY C. W. RUSSUM, RLS, DATED JULY, 1961 AND RECORDED IN BOOK OF MAPS 1961, PAGE 97, WAKE COUNTY RECORDS; THENCE ALONG SAID EAST LINE OF TRACT 3 N01°11'04"W 240.24' TO AN IRON PIPE ON THE SOUTHWEST RIGHT OF WAY LINE OF BURLINGTON MILLS ROAD (S.R. 2051); THENCE ALONG SAID SOUTHWEST RIGHT OF WAY LINE THE FOLLOWING FOUR COURSES: (1) S47°12'51"E 130.81'; (2) ALONG THE ARC OF A TANGENT CURVE TO THE LEFT, CONCAVE TO THE NORTHEAST, HAVING A RADIUS OF 600.00', THROUGH A CENTRAL ANGLE OF 26°22'04", AN ARC LENGTH OF 276.12' AND BEING SUBTENDED BY A CHORD BEARING S60°23'53"E 273.69'; (3) S75°02'10"E 50.12'; AND (4) S77°31'31"E 22.85' TO THE NORTH LINE OF AFORESAID LOT 2-3; THENCE ALONG SAID NORTH LINE OF LOT 2-3 N89°45'02"W 399.74' TO THE POINT OF BEGINNING.

CONTAINING 0.828 ACRES, MORE OR LESS.

PARCEL 'B' (PIN #1758-58-2090)

ALL THAT CERTAIN REAL PROPERTY SITUATED IN THE TOWN OF ROLESVILLE, COUNTY OF WAKE, STATE OF NORTH CAROLINA, DESCRIBED AS FOLLOWS:

BEGINNING AT A FOUND IRON PIPE MARKING THE SOUTHWEST CORNER OF PARCEL 2 AS SAID PARCEL IS DESCRIBED IN DEED BOOK 15498, PAGE 1302, WAKE COUNTY RECORDS; THENCE ALONG THE SOUTH LINE OF SAID PARCEL 2 S89°45'02"E 399.74' TO THE SOUTHWEST RIGHT OF WAY LINE OF BURLINGTON MILLS ROAD (S.R. 2051); THENCE CONTINUING S89°45'02"E 200.72' TO THE NORTHWEST CORNER OF LOT 2-4 AS SAID LOT IS SHOWN AND SO DESIGNATED ON THAT CERTAIN PLAT ENTITLED "RECOMBINATION SURVEY FOR TOMMY TWITTY, TRACTS 2-2 & 2-3, TWITTY PROP.", BY W. GRAHAM CAWTHORNE, JR., RLS, DATED NOVEMBER 17, 1995, REVISED JANUARY 12, 1996 AND RECORDED IN BOOK OF MAPS 1996, PAGE 1582, WAKE COUNTY RECORDS; THENCE ALONG THE SOUTHWEST LINE OF SAID LOT 2-4 S37°53'38"E 39.01' TO A FOUND BENT IRON PIPE AT AN ANGLE POINT IN THE SOUTH RIGHT OF WAY LINE OF BURLINGTON MILLS ROAD; THENCE CONTINUING S37°53'38"E 454.70' TO A FOUND IRON PIPE AT AN ANGLE POINT IN THE NORTHWEST RIGHT OF WAY LINE OF LOUISBURG ROAD (U.S. 401); THENCE CONTINUING S37°53'38"E 45.31' TO THE CENTERLINE OF LOUISBURG ROAD; THENCE ALONG THE CENTERLINE OF SAID ROAD, ALONG THE ARC OF A CURVE TO THE LEFT, CONCAVE TO THE SOUTHEAST, HAVING A RADIUS OF 3,750.00', THROUGH A CENTRAL ANGLE OF 08°13'06", AN ARC LENGTH OF 537.89' AND BEING SUBTENDED BY A CHORD BEARING S41°12'09"W 537.43'; THENCE LEAVING SAID CENTERLINE, ALONG THE NORTHEAST LINE OF LOTS 1 AND 2 AS SAID LOTS ARE SHOWN AND SO DESIGNATED ON THAT CERTAIN PLAT ENTITLED "SURVEY FOR GRAND PARK PROPERTIES, LOTS 1 AND 2", BY CAWTHORNE, MOSS & PANCIERA, P.C., DATED OCTOBER 7, 1998 AND RECORDED IN BOOK OF MAPS 1999, PAGE 1039, WAKE COUNTY RECORDS, N49°16'09"W 479.09' TO A FOUND IRON PIPE MARKING AN ANGLE POINT IN SAID LOT 2; THENCE CONTINUING ALONG THE NORTHEAST LINE OF SAID LOT 2 N66°40'58"W 215.40' TO A FOUND IRON PIPE AT THE NORTHWEST CORNER THEREOF, SAID PIPE ALSO BEING ON THE EAST LINE OF TRACT #3 AS SAID TRACT IS SHOWN AND SO DESIGNATED ON THAT CERTAIN PLAT ENTITLED "W. H. MARSHALL ESTATE", BY C. W. RUSSUM, RLS, DATED JULY, 1961 AND RECORDED IN BOOK OF MAPS 1961, PAGE 97, WAKE COUNTY RECORDS; THENCE ALONG SAID EAST LINE OF TRACT 3 N01°36'18"W 428.68' TO THE POINT OF BEGINNING.

THIS PARCEL IS THE SAME AS LOT 2-3 AS SHOWN AND SO DESIGNATED ON THAT CERTAIN PLAT ENTITLED "RECOMBINATION SURVEY FOR TOMMY TWITTY, TRACTS 2-2 & 2-3, TWITTY PROP.", BY W. GRAHAM CAWTHORNE, JR., RLS, DATED NOVEMBER 17, 1995, REVISED JANUARY 12, 1996 AND RECORDED IN BOOK OF MAPS 1996, PAGE 1582, WAKE COUNTY RECORDS.

CONTAINING 11.168 ACRES, MORE OR LESS.

MATCH LINE

NEW LEGAL DESCRIPTIONS

PARCEL 'C' (PIN #1758-56-8976)

ALL THAT CERTAIN REAL PROPERTY SITUATED IN THE TOWN OF ROLESVILLE, COUNTY OF WAKE, STATE OF NORTH CAROLINA, DESCRIBED AS FOLLOWS:

BEGINNING AT A FOUND IRON PIPE MARKING THE NORTHEAST CORNER OF TRACT 2 AS SAID TRACT IS SHOWN AND SO DESIGNATED ON THAT CERTAIN PLAT ENTITLED "RECOMBINATION MAP OF BOBBY L. MURRAY TRUST, TRACTS 1+2", BY KENNETH CLOSE, INC., DATED NOVEMBER 7, 2002 AND RECORDED IN BOOK OF MAPS 2005, PAGES 1195 AND 1196, WAKE COUNTY RECORDS; THENCE ALONG THE NORTH LINE OF SAID TRACT 2 N75°27'01"W 704.12' TO A FOUND IRON PIPE ON THE SOUTHEAST RIGHT OF WAY LINE OF LOUISBURG ROAD (U.S. 401); THENCE CONTINUING N75°27'01"W 32.34' TO THE CENTERLINE OF LOUISBURG ROAD; THENCE ALONG THE CENTERLINE OF SAID ROAD N36°33'22"E 1,116.98'; THENCE CONTINUING ALONG SAID CENTERLINE, ALONG THE ARC OF A TANGENT CURVE TO THE RIGHT, CONCAVE TO THE SOUTHEAST, HAVING A RADIUS OF 3,750.00', THROUGH A CENTRAL ANGLE OF 18°18'05", AN ARC LENGTH OF 1,197.82' AND BEING SUBTENDED BY A CHORD BEARING N45°42'25"E 1,192.73'; THENCE LEAVING SAID CENTERLINE S89°44'38"E 134.33' TO AN ANGLE POINT IN THE SOUTHWEST LINE OF THAT CERTAIN PARCEL DESCRIBED IN DEED BOOK 6821, PAGE 005, WAKE COUNTY RECORDS; THENCE ALONG THE SOUTHWEST LINE OF SAID PARCEL AND ALONG THE WEST LINE OF WALL CREEK SUBDIVISION, PHASES 2, 4 AND 5-A AS RECORDED IN BOOK OF MAPS 1997, PAGE 1162, BOOK OF MAPS 2001, PAGE 628 AND BOOK OF MAPS 2002, PAGE 825, WAKE COUNTY RECORDS, S03°05'32"W 2,131.93' TO A POINT ON THE NORTH LINE OF CARLTON POINTE SUBDIVISION, PHASE I AS RECORDED IN BOOK OF MAPS 2008, PAGES 5 TO 10, WAKE COUNTY RECORDS; THENCE ALONG SAID NORTH LINE OF CARLTON POINTE SUBDIVISION N75°27'01"W 852.86' TO THE POINT OF BEGINNING.

THIS PARCEL IS THE SAME AS TRACTS 2A AND 3 AS SHOWN AND SO DESIGNATED ON THAT CERTAIN PLAT ENTITLED "RECOMBINATION SURVEY FOR TOMMY TWITTY", BY W. GRAHAM CAWTHORNE, JR., RLS, DATED NOVEMBER 17, 1995 AND RECORDED IN BOOK OF MAPS 1995, PAGE 2034, WAKE COUNTY RECORDS.

CONTAINING 44.100 ACRES, MORE OR LESS.

PARCEL 'D' (PIN #1758-45-8905)

ALL THAT CERTAIN REAL PROPERTY SITUATED IN THE TOWN OF ROLESVILLE, COUNTY OF WAKE, STATE OF NORTH CAROLINA, DESCRIBED AS FOLLOWS:

BEGINNING AT A FOUND IRON PIPE ON THE SOUTH LINE OF TRACT 3 AS SAID TRACT IS SHOWN AND SO DESIGNATED ON THAT CERTAIN PLAT ENTITLED "RECOMBINATION SURVEY FOR TOMMY TWITTY", BY W. GRAHAM CAWTHORNE, JR., RLS, DATED NOVEMBER 17, 1995 AND RECORDED IN BOOK OF MAPS 1995, PAGE 2034, WAKE COUNTY RECORDS, SAID PIPE ALSO BEING AN ANGLE POINT IN THE NORTHWEST LINE OF CARLTON POINTE SUBDIVISION, PHASE I AS RECORDED IN BOOK OF MAPS 2008, PAGES 5 TO 10, WAKE COUNTY RECORDS; THENCE ALONG THE NORTHWEST LINE OF SAID CARLTON POINTE SUBDIVISION S36°44'45"W 877.98' TO AN ANGLE POINT; THENCE CONTINUING ALONG SAID NORTHWEST LINE AND ALONG THE NORTH LINE OF LOTS 1, 2 AND 3 AS SAID LOTS ARE SHOWN AND SO DESIGNATED ON THAT CERTAIN PLAT ENTITLED "SUBDIVISION PLAT FOR BARRETT VENTURES, LLC", BY CAWTHORNE, MOSS & PANCIERA, P.C., DATED APRIL 4, 2007 AND RECORDED IN BOOK OF MAPS 2008, PAGE 702, WAKE COUNTY RECORDS, S87°10'58"W 737.24' TO AN ANGLE POINT IN THE EAST RIGHT OF WAY LINE OF JONESVILLE ROAD (S.R. 2226) AND THE SOUTHEAST CORNER OF THAT CERTAIN PARCEL DESCRIBED IN DEED BOOK 13993, PAGE 2591, WAKE COUNTY RECORDS; THENCE ALONG THE EAST LINE OF SAID PARCEL N02°07'15"W 48.32'; THENCE CONTINUING ALONG SAID EAST LINE, ALONG THE ARC OF A CURVE TO THE LEFT, CONCAVE TO THE WEST, HAVING A RADIUS OF 123.92', THROUGH A CENTRAL ANGLE OF 30°27'05", AN ARC LENGTH OF 65.86' AND BEING SUBTENDED BY A CHORD BEARING N17°21'49"W 65.09' TO THE EAST RIGHT OF WAY LINE OF JONESVILLE ROAD; THENCE ALONG SAID EAST RIGHT OF WAY LINE N03°10'03"W 17.67' TO THE SOUTHEAST RIGHT OF WAY LINE OF LOUISBURG ROAD (U.S. 401); THENCE ALONG SAID SOUTHEAST RIGHT OF WAY LINE THE FOLLOWING EIGHT COURSES: (1) N41°10'16"E 41.30'; (2) N40°37'47"E 49.15'; (3) N39°31'43"E 50.83'; (4) N38°52'58"E 49.80'; (5) N38°22'04"E 50.40'; (6) N37°17'31"E 50.37'; (7) N36°44'45"E 304.20'; AND (8) N36°27'57"E 396.53' TO A FOUND IRON PIPE ON THE SOUTH LINE OF THE AFORESAID TRACT 3; THENCE ALONG SAID SOUTH LINE OF TRACT 3 S75°27'01"E 704.12' TO THE POINT OF BEGINNING.

CONTAINING 15.024 ACRES, MORE OR LESS.

SURVEYOR'S CERTIFICATION:

TO WALLBROOK LANDCO, LLC, ITS SUCCESSORS AND/OR ASSIGNS AS THEIR INTERESTS MAY APPEAR, AND INVESTORS TITLE INSURANCE COMPANY:

THIS IS TO CERTIFY THAT THIS MAP OR PLAT AND THE SURVEY ON WHICH IT IS BASED WERE MADE IN ACCORDANCE WITH THE 2016 MINIMUM STANDARD DETAIL REQUIREMENTS FOR ALTA/NSPS LAND TITLE SURVEYS, JOINTLY ESTABLISHED AND ADOPTED BY ALTA AND NSPS, AND INCLUDES ITEMS 1, 2, 3, 4, 6A, 7A, 7B1, 8, 9, 11, 13, 16 AND 17 OF TABLE "A" THEREOF. THE FIELDWORK WAS COMPLETED ON MARCH 6, 2020.

10/31/2020

WILLIAM T. ROBBINS, II — DATE

P.L.S. #L-4192

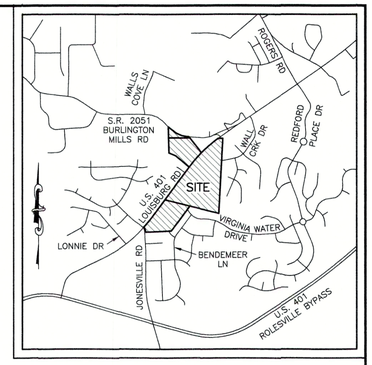

VICINITY MAP
SCALE: 1"=2000'

LEGEND

(1) = RECORD DATA PER BM 1996 PG 1582
(2) = RECORD DATA PER BM 2011 PG 383
(3) = RECORD DATA PER BM 1995 PG 2034
(4) = RECORD DATA PER BM 2002 PG 825
(5) = RECORD DATA PER BM 2005 PG 1195-1196
(6) = RECORD DATA PER DB 13993 PG 2591
● = FOUND MONUMENT AS NOTED
○ = SET IRON PIN
△ = NCGS MONUMENT
∘ = DIMENSION POINT (NOTHING SET)
℄ = PROPERTY LINE
R/W = RIGHT OF WAY

C&G = CURB AND GUTTER
CATV = CABLE TV PEDESTAL
DI = DROP INLET
ELEC = ELECTRIC BOX
EM = ELECTRIC METER
F/O = FIBER OPTIC
FH = FIRE HYDRANT
GV = GAS VALVE
HBX = HAND BOX
LP = LIGHT POLE
PP = POWER POLE
= GUY WIRE
RCP = REINFORCED CONCRETE PIPE
S.F. = SQUARE FEET (AREA)
= SIGN
SIGNAL = TRAFFIC SIGNAL POLE
SS = SANITARY SEWER MANHOLE
= SANITARY SEWER FORCE MAIN VALVE
SD = STORM DRAIN MANHOLE
TBL = TELEPHONE PEDESTAL
TRAF = TRAFFIC BOX
WATER = WATER BOX
WM = WATER METER
WMH = WATER MANHOLE
WV = WATER VALVE
WELL = WELL
X-WALK = PEDESTRIAN X-WALK POLE
E = ELECTRIC LINE
FM = SANITARY SEWER FORCE MAIN
FO = FIBER OPTIC LINE
G = GAS LINE
OHE = OVERHEAD ELECTRIC LINE
S = SANITARY SEWER LINE
T = TELEPHONE LINE
TV = CABLE TV LINE
W = WATER LINE

MATCH LINE

JOHNSON, MIRMIRAN & THOMPSON
Engineering A Brighter Future®
9201 Arboretum Parkway Suite 310 Richmond, Virginia 23236
PHONE: (804)-323-9900 FAX: (804)-323-0596
EMAIL: jmtva@jmt-engineering.com

REVISION #	DATE	REASON FOR REVISION
1	10/01/2020	ADDED RIPARIAN BUFFER ALONG WALL CREEK

NORTH CAROLINA PROFESSIONAL SEAL L-4192 LAND SURVEYOR WILLIAM T. ROBBINS II

ALTA/NSPS LAND TITLE SURVEY

PREPARED FOR
WALLBROOK LANDCO, LLC

WAKE FOREST TOWNSHIP
TOWN OF ROLESVILLE, WAKE COUNTY, NORTH CAROLINA

DRAWN BY: JSZ	PROJECT#:	
CHECKED BY: WTR	CONTRACT#:	JMT#: 17-10946-001
DATE: 03/25/2020	SCALE: 1"=100'	SHEET 1 OF 3

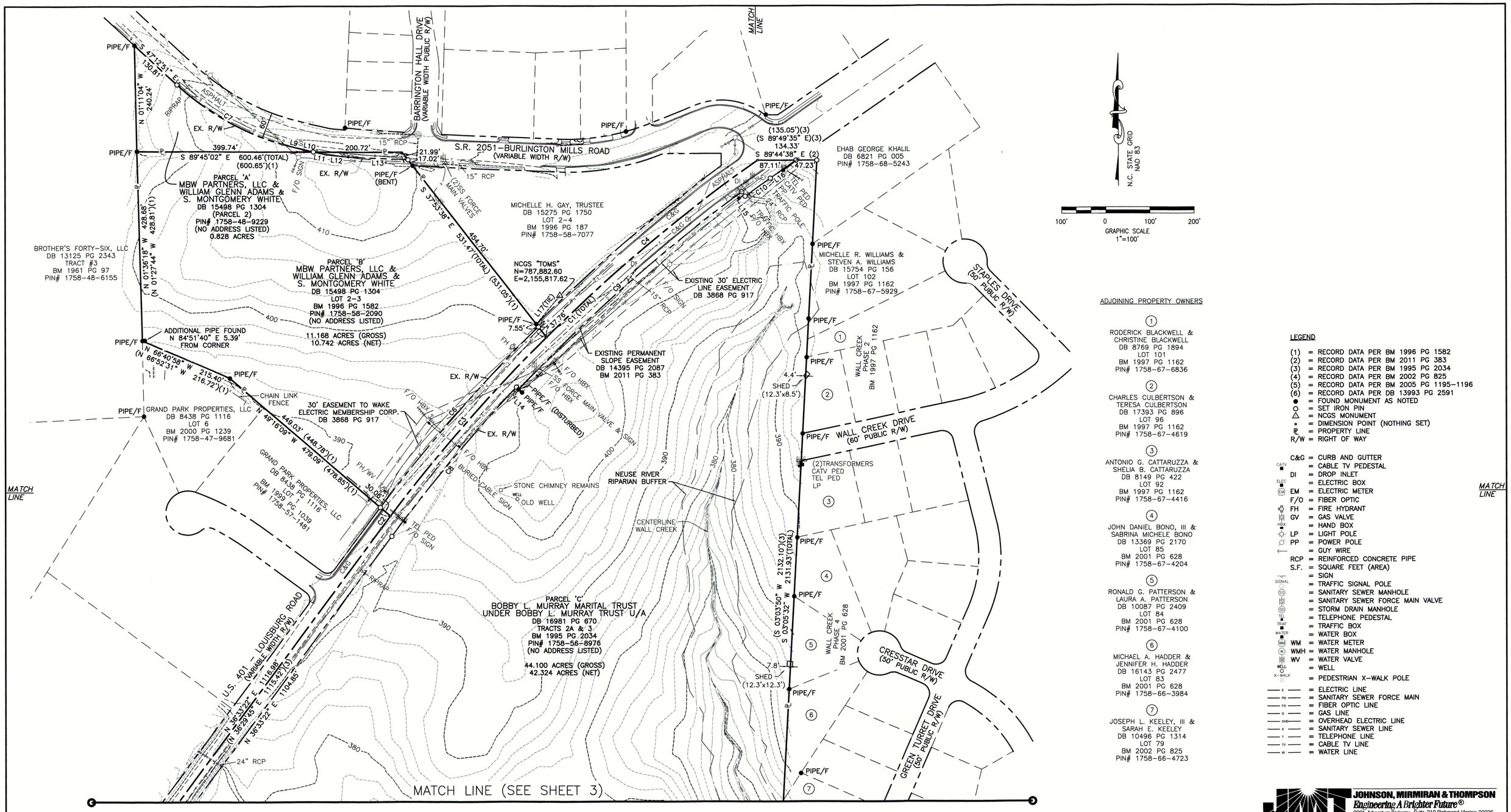

LINE	BEARING	DISTANCE	
L1	N 02°07'15" W	48.32'	(6)
L2	N 03°10'03" W	17.67'	
L3	N 41°10'16" E	41.30'	(5)
L4	N 40°37'47" E	49.15'	(5)
L5	N 39°31'43" E	50.83'	(5)
L6	N 38°52'58" E	49.80'	(5)
L7	N 38°22'04" E	50.40'	(5)
L8	N 37°17'31" E	50.37'	(5)
L9	S 75°02'10" E	50.12'	
L10	S 77°31'31" E	22.85'	
L11	S 77°31'31" E	29.16'	
L12	S 84°03'28" E	50.67'	
L13	S 87°10'20" E	135.52'	
L14	S 46°39'44" E	7.50'	(2)
L15	S 36°12'58" E	12.50'	(2)
L16	N 55°13'38" E	70.99'	(71.01')(2)
L17	N 39°21'58" E	83.92'	

CURVE TABLE

CURVE	ARC LENGTH	RADIUS	DELTA ANGLE	CHORD BEARING	CHORD LENGTH	
C1	1197.82'	3750.00'	18°18'05"	S 45°42'25" W	1192.73'	(R=3750.00', L=1199.06')(3)
C2	35.15'	3750.00'	0°32'13"	S 36°49'29" W	35.15'	
C3	537.89'	3750.00'	8°13'06"	S 41°12'09" W	537.43'	
C4	624.78'	3750.00'	9°32'45"	S 50°05'04" W	624.06'	
C5	65.86'	123.92'	30°27'05"	S 17°21'49" E	65.09'	
C6	543.86'	3780.00'	8°14'37"	S 41°14'38" W	543.40'	
C7	276.12'	600.00'	26°22'04"	N 60°23'53" W	273.69'	
C8	440.32'	3720.00'	6°46'55"	S 39°56'50" W	440.07'	
C9	675.88'	3712.50'	10°25'52"	S 48°33'13" W	674.95'	
C10	70.31'	3700.00'	1°05'20"	S 54°18'48" W	70.31'	(2)

JOHNSON, MIRMIRAN & THOMPSON
Engineering A Brighter Future®
9201 Arboretum Parkway Suite 310 Richmond, Virginia 23236
PHONE: (804)-323-9900 FAX: (804)-323-0596
EMAIL: jmtva@jmt-engineering.com

REVISION #	DATE	REASON FOR REVISION
1	10/01/2020	ADDED RIPARIAN BUFFER ALONG WALL CREEK

NORTH CAROLINA PROFESSIONAL SEAL L-4192 LAND SURVEYOR WILLIAM T. ROBBINS, II

ALTA/NSPS LAND TITLE SURVEY

PREPARED FOR
WALLBROOK LANDCO, LLC

WAKE FOREST TOWNSHIP
TOWN OF ROLESVILLE, WAKE COUNTY, NORTH CAROLINA

DRAWN BY: JSZ	PROJECT#:	
CHECKED BY: WTR	CONTRACT#:	JMT#: 17-10946-001
DATE: 03/25/2020	SCALE: 1"=100'	SHEET 2 OF 3

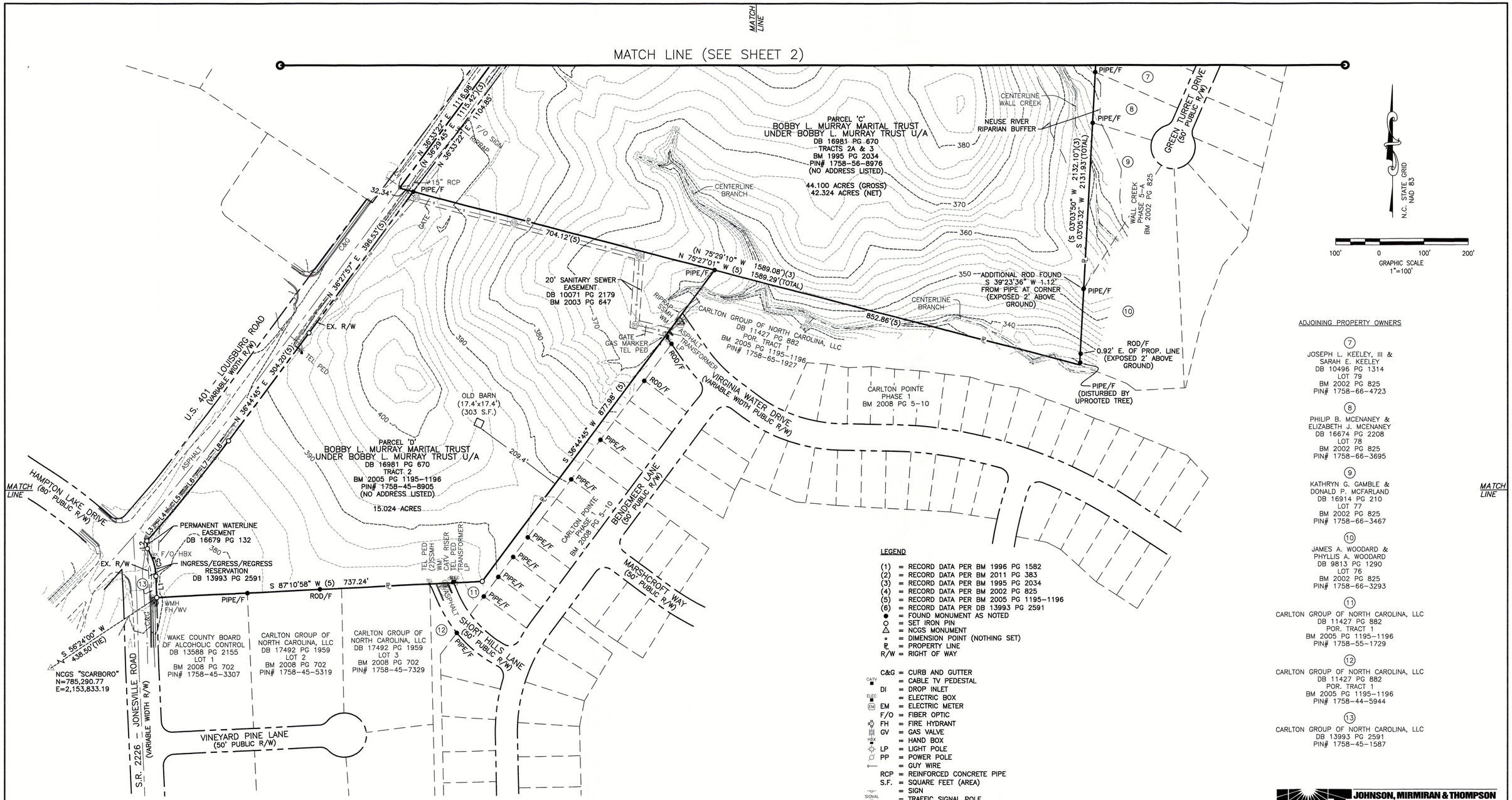

ADJOINING PROPERTY OWNERS

(7)
JOSEPH L. KEELEY, III &
SARAH E. KEELEY
DB 10496 PG 1314
LOT 79
BM 2002 PG 825
PIN# 1758-66-4723

(8)
PHILIP B. MCENANEY &
ELIZABETH J. MCENANEY
DB 16674 PG 2208
LOT 78
BM 2002 PG 825
PIN# 1758-66-3695

(9)
KATHRYN G. GAMBLE &
DONALD P. MCFARLAND
DB 16914 PG 210
LOT 77
BM 2002 PG 825
PIN# 1758-66-3467

(10)
JAMES A. WOODARD &
PHYLLIS A. WOODARD
DB 9813 PG 1290
LOT 76
BM 2002 PG 825
PIN# 1758-66-3293

(11)
CARLTON GROUP OF NORTH CAROLINA, LLC
DB 11427 PG 882
POR. TRACT 1
BM 2005 PG 1195-1196
PIN# 1758-55-1729

(12)
CARLTON GROUP OF NORTH CAROLINA, LLC
DB 11427 PG 882
POR. TRACT 1
BM 2005 PG 1195-1196
PIN# 1758-44-5944

(13)
CARLTON GROUP OF NORTH CAROLINA, LLC
DB 13993 PG 2591
PIN# 1758-45-1587

LEGEND

(1) = RECORD DATA PER BM 1996 PG 1582
(2) = RECORD DATA PER BM 2011 PG 383
(3) = RECORD DATA PER BM 1995 PG 2034
(4) = RECORD DATA PER BM 2002 PG 825
(5) = RECORD DATA PER BM 2005 PG 1195-1196
(6) = RECORD DATA PER DB 13993 PG 2591
● = FOUND MONUMENT AS NOTED
○ = SET IRON PIN
△ = NCGS MONUMENT
∘ = DIMENSION POINT (NOTHING SET)
℞ = PROPERTY LINE
R/W = RIGHT OF WAY

C&G = CURB AND GUTTER
CATV = CABLE TV PEDESTAL
DI = DROP INLET
ELEC = ELECTRIC BOX
EM = ELECTRIC METER
F/O = FIBER OPTIC
FH = FIRE HYDRANT
GV = GAS VALVE
HBX = HAND BOX
LP = LIGHT POLE
PP = POWER POLE
= GUY WIRE
RCP = REINFORCED CONCRETE PIPE
S.F. = SQUARE FEET (AREA)
= SIGN
SIGNAL = TRAFFIC SIGNAL POLE
SS = SANITARY SEWER MANHOLE
= SANITARY SEWER FORCE MAIN VALVE
SD = STORM DRAIN MANHOLE
TEL = TELEPHONE PEDESTAL
TRAF = TRAFFIC BOX
WATER = WATER BOX
WM = WATER METER
WMH = WATER MANHOLE
WV = WATER VALVE
WELL = WELL
X-WALK = PEDESTRIAN X-WALK POLE
E = ELECTRIC LINE
FM = SANITARY SEWER FORCE MAIN
FO = FIBER OPTIC LINE
G = GAS LINE
OHE = OVERHEAD ELECTRIC LINE
S = SANITARY SEWER LINE
T = TELEPHONE LINE
TV = CABLE TV LINE
W = WATER LINE

LINE	BEARING	DISTANCE	
L1	N 02°07'15" W	48.32'	(6)
L2	N 03°10'03" W	17.67'	
L3	N 41°10'16" E	41.30'	(5)
L4	N 40°37'47" E	49.15'	(5)
L5	N 39°31'43" E	50.83'	(5)
L6	N 38°52'58" E	49.80'	(5)
L7	N 38°22'04" E	50.40'	(5)
L8	N 37°17'31" E	50.37'	(5)
L9	S 75°02'10" E	50.12'	
L10	S 77°31'31" E	22.85'	
L11	S 77°31'31" E	29.16'	
L12	S 84°03'28" E	50.67'	
L13	S 87°10'20" E	135.52'	
L14	S 46°39'44" E	7.50'	(2)
L15	S 36°12'58" E	12.50'	(2)
L16	N 55°13'38" E	70.99'	(71.01')(2)
L17	N 39°21'58" E	83.92'	

CURVE TABLE

CURVE	ARC LENGTH	RADIUS	DELTA ANGLE	CHORD BEARING	CHORD LENGTH	
C1	1197.82'	3750.00'	18°18'05"	S 45°42'25" W	1192.73'	(R=3750.00', L=1199.06')(3)
C2	35.15'	3750.00'	0°32'13"	S 36°49'29" W	35.15'	
C3	537.89'	3750.00'	8°13'06"	S 41°12'09" W	537.43'	
C4	624.78'	3750.00'	9°32'45"	S 50°05'04" W	624.06'	
C5	65.86'	123.92'	30°27'05"	S 17°21'49" E	65.09'	
C6	543.86'	3780.00'	8°14'37"	S 41°14'38" W	543.40'	
C7	276.12'	600.00'	26°22'04"	N 60°23'53" W	273.69'	
C8	440.32'	3720.00'	6°46'55"	S 39°56'50" W	440.07'	
C9	675.88'	3712.50'	10°25'52"	S 48°33'13" W	674.95'	
C10	70.31'	3700.00'	1°05'20"	S 54°18'48" W	70.31'	(2)

JOHNSON, MIRMIRAN & THOMPSON
Engineering A Brighter Future®
9201 Arboretum Parkway Suite 310 Richmond, Virginia 23236
PHONE: (804)-323-9900 FAX: (804)-323-0596
EMAIL: jmtva@jmt-engineering.com

REVISION #	DATE	REASON FOR REVISION
1	10/01/2020	ADDED RIPARIAN BUFFER ALONG WALL CREEK

NORTH CAROLINA PROFESSIONAL SEAL L-4192 LAND SURVEYOR WILLIAM U. RUBERSON

ALTA/NSPS LAND TITLE SURVEY

PREPARED FOR
WALLBROOK LANDCO, LLC

WAKE FOREST TOWNSHIP
TOWN OF ROLESVILLE, WAKE COUNTY, NORTH CAROLINA

DRAWN BY: JSZ	PROJECT#:	
CHECKED BY: WTR	CONTRACT#:	JMT#: 17-10946-001
DATE: 03/25/2020	SCALE: 1"=100'	SHEET 3 OF 3