STATE OF NORTH CAROLINA
DEPARTMENT OF ENVIRONMENTAL QUALITY
DIVISION OF WATER RESOURCES

WATER QUALITY GENERAL CERTIFICATION NO. 4256

GENERAL CERTIFICATION FOR PROJECTS ELIGIBLE FOR US ARMY CORPS OF ENGINEERS NATIONWIDE PERMIT NUMBER 29 (RESIDENTIAL DEVELOPMENT)

Water Quality General Certification Number 4256 is issued in conformity with the requirements of Section 401, Public Laws 92-500 and 95-217 of the United States and subject to the North Carolina Regulations in 15A NCAC 02H .0500 and 15A NCAC 02B .0200 for the discharge of fill material to surface waters and wetland areas as described in 33 CFR 330 Appendix A (B) (29) of the US Army Corps of Engineers regulations.

The State of North Carolina certifies that the specified category of activity will comply with water quality requirements and applicable portions of Sections 301, 302, 303, 306 and 307 of the Public Laws 92-500 and 95-217 if conducted in accordance with the conditions hereinafter set forth.

Effective date: March 15, 2021

Signed this day: December 18, 2020

By

S. Daniel Smith

S. Daniel Smith
Director

GENERAL CERTIFICATION COVERAGE:

Activities that are eligible for US Army Corps of Engineers Nationwide Permit 29 qualify for coverage under this General Certification unless they meet one of the thresholds listed below. Activities meeting any one (1) of the thresholds or circumstances listed below are not eligible for coverage under this General Certification and require *an Individual* 401 Water Quality Certification from the Division of Water Resources (DWR):

a) If any of the conditions of this General Certification cannot be met; or
b) Total temporary and permanent impacts to streams greater than 150 feet; or
c) Total temporary and permanent impacts to wetlands or open waters equal to or greater than one-tenth (1/10) acre; or
d) Any impacts to streams from excavation or dredging other than excavation that is conducted as preparation for installing permanent fill or structures; or
e) Any stream restoration or relocation other than stream relocations that are conducted for the purpose of proper culvert installation, alignment, protection, repair or maintenance where the relocation length is equal to or less than 50 feet in length and the relocated stream is designed and installed based on current natural channel techniques; or
f) Complete dewatering and drawdowns to a sediment layer related to pond/dam maintenance or removal unless the dewatering activity has been designed to ensure no discharge of sediment will occur into downstream waters AND has been covered by a Sediment and Erosion Control Plan Approval from the Division of Energy, Mineral, and Land Resources (DEMLR) or a delegated local program; or
g) Any high-density project, as defined in 15A NCAC 02H .1003(3) and by the density thresholds specified in 15A NCAC 02H .1017, which:
    i. Disturbs one acre or more of land (including a project that disturbs less than one acre of land that is part of a larger common plan of development or sale); and
    ii. Has permanent wetland, stream or open water impacts; and
    iii. Is proposing new built-upon area; and
    iv. Does not have a stormwater management plan reviewed and approved under a state stormwater program[1] or a state-approved local government stormwater program[2].

    Projects that have vested rights, exemptions, or other legacy rights or exemptions from state or locally-implemented stormwater programs and projects that satisfy state or locally-implemented stormwater programs through use of community in-lieu fee programs **require an Individual 401 Certification**; or
h) Any permanent impacts to waters, or to wetlands adjacent to waters, designated as: ORW (including SAV), HQW (including PNA), SA, WS-I, WS-II, Trout, or North Carolina or National Wild and Scenic River; or

[1] e.g. Coastal Counties, HQW, ORW, or state-implemented Phase II NPDES
[2] e.g. Delegated Phase II NPDES, Water Supply Watershed, Nutrient-Sensitive Waters, or Universal Stormwater Management Program

i) Any permanent impacts to coastal wetlands [15A NCAC 07H .0205], or Unique Wetlands (UWL) [15A NCAC 02B .0231]; or
j) Any impacts to subject water bodies and/or state regulated riparian buffers along subject water bodies in the Neuse, Tar-Pamlico, or Catawba River Basins or in the Randleman Lake, Jordan Lake or Goose Creek Watersheds (or any other basin or watershed with State Regulated Riparian Area Protection Rules [Buffer Rules] in effect at the time of application) *unless*:
    i. The activities are listed as "EXEMPT" or "DEEMED ALLOWABLE" from these rules; or
    ii. A Buffer Authorization Certificate is issued by the NC Division of Coastal Management (DCM); or
    iii. A Buffer Authorization Certificate, Certificate with Exception, or Minor Variance is issued by a delegated or designated local government implementing a state riparian buffer program pursuant to 143-215.23.

In accordance with 15A NCAC 02H .0503(f), the Director of the North Carolina Division of Water Resources may require submission of a formal application for Individual Certification for any project if it is deemed in the public's best interest or determined that the project is likely to have a significant adverse effect upon water quality, including state or federally listed endangered or threatened aquatic species, or will degrade the waters so that existing uses of the waters or downstream waters are precluded.

This General Certification does not relieve the permittee of the responsibility to obtain all other required Federal, State, or Local approvals before proceeding with the project, including those required by, but not limited to, Sediment and Erosion Control, Non-Discharge, Water Supply Watershed, and Trout Buffer regulations.

This General Certification neither grants nor affirms any property right, license, or privilege in any waters, or any right of use in any waters. This General Certification does not authorize any person to interfere with the riparian rights, littoral rights, or water use rights of any other person and does not create any prescriptive right or any right of priority regarding any usage of water. This General Certification shall not be interposed as a defense in any action respecting the determination of riparian or littoral rights or other rights to water use. No consumptive user is deemed by virtue of this General Certification to possess any prescriptive or other right of priority with respect to any other consumptive user regardless of the quantity of the withdrawal or the date on which the withdrawal was initiated or expanded.

Upon the presentation of proper credentials, DWR may inspect the property.

This General Certification shall expire on the same day as the expiration date of the corresponding Nationwide Permit. The conditions in effect on the date of issuance of Certification for a specific project shall remain in effect for the life of the project, regardless of the expiration date of this General Certification. This General Certification is rescinded when the US Army Corps of Engineers reauthorizes the corresponding Nationwide Permit or when deemed appropriate by the Director of the Division of Water Resources.

Non-compliance with or violation of the conditions herein set forth by a specific project may result in revocation of this General Certification for the project and may also result in criminal and/or civil penalties.

I. ACTIVITY SPECIFIC CONDITIONS:

1. If this Water Quality Certification is used to access residential, commercial or industrial building sites, then all parcels owned by the permittee that are part of the single and complete project authorized by this Certification must be buildable without additional impacts to streams or wetlands.

   Citation: 15A NCAC 02H .0502(a);15A NCAC 02H .0506(b); 15A NCAC 02H .0507(c)
   Justification: A project that affects waters shall not be permitted unless the existing uses, and the water quality to protect such uses, are protected. In determining that the proposed activity will comply with state water quality standards (including designated uses, numeric criteria, narrative criteria and the state's antidegradation policy), the Division must evaluate if the activity has avoided and minimized impacts to waters, would cause or contribute to a violation of standards or would result in secondary or cumulative impacts.

2. For road construction purposes, this Certification shall only be utilized from natural high ground to natural high ground.

   Citation: 15A NCAC 02H .0502(a);15A NCAC 02H .0506(b); 15A NCAC 02H .0507(c)
   Justification: A project that affects waters shall not be permitted unless the existing uses, and the water quality to protect such uses, are protected. In determining that the proposed activity will comply with state water quality standards (including designated uses, numeric criteria, narrative criteria and the state's antidegradation policy), the Division must evaluate if the activity has avoided and minimized impacts to waters, would cause or contribute to a violation of standards or would result in secondary or cumulative impacts.

3. Deed notifications or similar mechanisms shall be placed on all lots/parcels with retained jurisdictional wetlands, waters, and state regulated riparian buffers within the project boundaries in order to assure compliance with NC Water Quality Certification Rules (15A NCAC 02H .0500), NC Isolated Wetland Rules (15A NCAC 02H .1300), and/or State Regulated Riparian Buffer Rules (15A NCAC 02B .0200). These mechanisms shall be put in place at the time of recording of the property or individual parcels, whichever is appropriate.

   Citation: 15A NCAC 02H .0502(a);15A NCAC 02H .0506(b); 15A NCAC 02H .0507(c)
   Justification: A project that affects waters shall not be permitted unless the existing uses, and the water quality to protect such uses, are protected. In determining that the proposed activity will comply with state water quality standards (including designated uses, numeric criteria, narrative criteria and the state's antidegradation policy), the Division must evaluate if the activity has avoided and minimized impacts to waters, would cause or contribute to a violation of standards or would result in secondary or cumulative impacts.

4. For all dam removal projects meeting the definition under G.S. 143-215.25 and requirements under G.S. 143-215.27 of a professionally supervised dam removal, the applicant shall provide documentation that any sediment that may be released has similar or lower level of contamination than sediment sampled from downstream of the dam in accordance with Session Law 2017-145.

   Citation: 15A NCAC 02H .0502; 15A NCAC 02H .0506(b); 15A NCAC 02H .0507(c); 15A NCAC02B .0200; S.L. 2017-145;
   Justification: A project that affects waters shall not be permitted unless the existing uses, and the water quality to protect such uses, are protected. In determining that the proposed activity will comply with state water quality standards (including designated uses, numeric criteria, narrative criteria and the state's antidegradation policy), the Division must evaluate if the activity has avoided and minimized impacts to waters, would cause or contribute to a violation of standards or would result in secondary or cumulative impacts.

5. If this Water Quality Certification is used for utility related impacts, then the following Activity Specific Conditions shall apply to those impacts.

   a. All sewer lines shall be designed, constructed and maintained in accordance with Title 15A NCAC Chapter 02T, applicable Minimum Design Criteria (MDC), and/or Alternative Design Criteria.

      Citation: 15A NCAC 02H .0506(b); 15A NCAC 02H .0507(c)
      Justification: The referenced Minimum Design criteria and 02T rules were adopted to ensure that conditions of waters be suitable for all best uses provided for in state rule (including, at minimum: aquatic life propagation, survival, and maintenance of biological integrity; wildlife: secondary contact recreation: agriculture); and that activities must not cause water pollution that precludes any best use on a short-term or long-term basis.

   b. Any utility construction corridor that is parallel to a stream or open water shall not be closer than 10 feet to the top of bank or ordinary high-water mark.

      Citation: 15A NCAC 02H .0506(b); 15A NCAC 02H .0507(c)
      Justification: A project that affects waters shall not be permitted unless the existing uses, and the water quality to protect such uses, are protected. In determining that the proposed activity will comply with state water quality standards (including designated uses, numeric criteria, narrative criteria and the state's antidegradation policy), the Division must evaluate if the activity has avoided and minimized impacts to waters, would cause or contribute to a violation of standards or would result in secondary or cumulative impacts.

   c. Where there are temporary or permanent impacts from stream crossings, utility lines shall cross the stream channel at a near-perpendicular direction (i.e., between 75 degrees and 105 degrees to the stream bank).

      Citation: 15A NCAC 02H .0506(b); 15A NCAC 02H .0507(c)

Justification: A project that affects waters shall not be permitted unless the existing uses, and the water quality to protect such uses, are protected. In determining that the proposed activity will comply with state water quality standards (including designated uses, numeric criteria, narrative criteria and the state's antidegradation policy), the Division must evaluate if the activity has avoided and minimized impacts to waters, would cause or contribute to a violation of standards or would result in secondary or cumulative impacts.

d. Construction corridors in wetlands and/or across stream channels shall be minimized to the maximum extent practicable and shall not exceed 40 feet wide for utility lines.

   For construction corridors in wetlands and across stream channels, stumps shall be grubbed only as needed to install the utility and remaining stumps shall be cut off at grade level. The general stripping of topsoil within wetlands along the construction corridor is prohibited.

   Citation: 15A NCAC 02H .0506(b); 15A NCAC 02H .0507(c)
   Justification: A project that affects waters shall not be permitted unless the existing uses, and the water quality to protect such uses, are protected. In determining that the proposed activity will comply with state water quality standards (including designated uses, numeric criteria, narrative criteria and the state's antidegradation policy), the Division must evaluate if the activity has avoided and minimized impacts to waters, would cause or contribute to a violation of standards or would result in secondary or cumulative impacts.

e. Permanent maintained access corridors in wetlands and across stream channels shall be restricted to the minimum width practicable and shall not exceed 30 feet wide except at manhole locations.

   Citation: 15A NCAC 02H .0506(b); 15A NCAC 02H .0507(c)
   Justification: A project that affects waters shall not be permitted unless the existing uses, and the water quality to protect such uses, are protected. In determining that the proposed activity will comply with state water quality standards (including designated uses, numeric criteria, narrative criteria and the state's antidegradation policy), the Division must evaluate if the activity has avoided and minimized impacts to waters, would cause or contribute to a violation of standards or would result in secondary or cumulative impacts.

f. For all utility lines constructed within wetlands, an anti-seep collar shall be placed at the downstream (utility line gradient) wetland boundary and every 150 feet up the gradient until the utility exits the wetland. Anti-seep collars may be constructed with class B concrete, compacted clay, PVC pipe, or metal collars. Wetland crossings that are directionally drilled, and perpendicular wetland crossings that are open cut and less than 150 feet long do not require anti-seep collars. The compacted clay shall have a specific infiltration of 1×10^{-5} cm/sec or less. A section and plan view diagram is attached for the anti-seep collars.

The following specifications shall apply to class B concrete:

i. Minimum cement content, sacks per cubic yard with rounded coarse aggregate 5.0
ii. Minimum cement content, sacks per cubic yard with angular coarse aggregate 5.5
iii. Maximum water-cement ratio gallons per sack 6.8
iv. Slump range 2" to 4"
v. Minimum strength - 28-day psi 2,500

Citation: 15A NCAC 02H .0506(b); 15A NCAC 02H .0507(c)
Justification: A project that affects waters shall not be permitted unless the existing uses, and the water quality to protect such uses, are protected. In determining that the proposed activity will comply with state water quality standards (including designated uses, numeric criteria, narrative criteria and the state's antidegradation policy), the Division must evaluate if the activity has avoided and minimized impacts to waters, would cause or contribute to a violation of standards or would result in secondary or cumulative impacts.

g. The permittee shall have a specific plan for restoring wetland contours to pre-construction conditions. Any excess material will be removed to a high ground disposal area.

The mixing of topsoil and subsoils within the wetlands along utility corridors shall be minimized to the greatest extent practical. During excavation, the soils shall be placed on fabric to minimize impacts whenever possible. Topsoil excavated from utility trenches will be piled separately from subsoils and will be backfilled into the trench only after the subsoils have been placed and compacted.

Citation: 15A NCAC 02H .0506(b); 15A NCAC 02H .0507(c)
Justification: A project that affects waters shall not be permitted unless the existing uses, and the water quality to protect such uses, are protected. In determining that the proposed activity will comply with state water quality standards (including designated uses, numeric criteria, narrative criteria and the state's antidegradation policy), the Division must evaluate if the activity has avoided and minimized impacts to waters, would cause or contribute to a violation of standards or would result in secondary or cumulative impacts.

II. GENERAL CONDITIONS:

1. The permittee shall report to the DWR Regional Office any noncompliance with, and/or any violation of, stream or wetland standards [15A NCAC 02B .0200], including but not limited to sediment impacts to streams or wetlands. Information shall be provided orally within 24 hours (or the next business day if a weekend or holiday) from the time the permittee became aware of the non-compliance circumstances.

Citation: 15A NCAC 02H .0506(b); 15A NCAC 02H .0507(c)
Justification: Timely reporting of non-compliance is important in identifying and minimizing

detrimental impacts to water quality and avoiding impacts due to water pollution that precludes any best use on a short-term or long-term basis.

2. No waste, spoil, solids, or fill of any kind shall occur in wetlands or waters beyond the footprint of the impacts (including temporary impacts); or beyond the thresholds established for use of this General Certification and Nationwide Permit.

   Citation: 15A NCAC 02H .0506; 15A NCAC 02H .0507(c)
   Justification: Surface water quality standards require that conditions of waters be suitable for all best uses provided for in state rule (including, at minimum: aquatic life propagation, survival, and maintenance of biological integrity; wildlife; secondary contact recreation; agriculture); and that activities must not cause water pollution that precludes any best use on a short-term or long-term basis.

3. All activities shall be in compliance with any applicable State Regulated Riparian Buffer Rules in Chapter 2B of Title 15A in the North Carolina Administrative Code.

   Citation: 15A NCAC 02H .0506(b); 15A NCAC 02H .0507(c)
   Justification: The referenced Riparian Buffer rules were adopted to address water quality impairments and further protect existing uses.

4. When applicable, all construction activities shall be performed and maintained in full compliance with G.S. Chapter 113A Article 4 (Sediment and Pollution Control Act of 1973). Regardless of applicability of the Sediment and Pollution Control Act, all projects shall incorporate appropriate Best Management Practices for the control of sediment and erosion so that no violations of state water quality standards, statutes, or rules occur.

   Design, installation, operation, and maintenance of all sediment and erosion control measures shall be equal to or exceed the requirements specified in the most recent version of the *North Carolina Sediment and Erosion Control Manual*, or for linear transportation projects, the *North Caroline Department of Transportation Sediment and Erosion Control Manual*.

   All devices shall be maintained on all construction sites, borrow sites, and waste pile (spoil) sites, including contractor-owned or leased borrow pits associated with the project. Sufficient materials required for stabilization and/or repair of erosion control measures and stormwater routing and treatment shall be on site at all times.

   For borrow pit sites, the erosion and sediment control measures shall be designed, installed, operated, and maintained in accordance with the most recent version of the *North Carolina Surface Mining Manual*. Reclamation measures and implementation shall comply with the reclamation in accordance with the requirements of the Sedimentation Pollution Control Act and the Mining Act of 1971.

   If the project occurs in waters or watersheds classified as Primary Nursery Areas (PNAs), SA, WS-I, WS-II, High Quality Waters (HQW), or Outstanding Resource Waters (ORW), then the

sedimentation and erosion control designs shall comply with the requirements set forth in 15A NCAC 04B .0124, *Design Standards in Sensitive Watersheds*.

Citation: 15A NCAC 02H .0506(b)(2); 15A NCAC 02H .0507(c); 15A NCAC02B .0200; 15A NCAC 02B .0231
Justification: A project that affects waters shall not be permitted unless the existing uses, and the water quality to protect such uses, are protected. Activities must not cause water pollution that precludes any best use on a short-term or long-term basis. As cited in Stream Standards: (2) Oils, deleterious substances, or colored or other wastes: only such amounts as shall not render the waters injurious to public health, secondary recreation, or to aquatic life and wildlife, or adversely affect the palatability of fish, aesthetic quality, or impair the waters for any designated uses; and (12) turbidity in the receiving water shall not exceed 50 Nephelometric Turbidity Units (NTU) in streams not designated as trout waters and 10 NTU in streams, lakes, or reservoirs designated as trout waters; for lakes and reservoirs not designated as trout waters, the turbidity shall not exceed 25 NTU; if turbidity exceeds these levels due to natural background conditions, the existing turbidity level shall not be increased. As cited in Wetland Standards: (1) Liquids, fill or other solids, or dissolved gases shall not be present in amounts that may cause adverse impacts on existing wetland uses; and (3) Materials producing color or odor shall not be present in amounts that may cause adverse impacts on existing wetland uses.

5. Sediment and erosion control measures shall not be installed in wetland or waters except within the footprint of temporary or permanent impacts otherwise authorized by this Certification. If placed within authorized impact areas, then placement of such measures shall not be conducted in a manner that results in dis-equilibrium of any wetlands, streambeds, or streambanks. Any silt fence installed within wetlands shall be removed from wetlands and the natural grade restored within two (2) months of the date that DEMLR or locally delegated program has released the specific area within the project to ensure wetland standards are maintained upon completion of the project.

   Citation: 15A NCAC 02H .0506(b); 15A NCAC 02H .0507(c); 15A NCAC02B .0200; 15A NCAC 02B .0231
   Justification: A project that affects waters shall not be permitted unless the existing uses, and the water quality to protect such uses, are protected. Activities must not cause water pollution that precludes any best use on a short-term or long-term basis. As cited in Stream Standards: (2) Oils, deleterious substances, or colored or other wastes: only such amounts as shall not render the waters injurious to public health, secondary recreation, or to aquatic life and wildlife, or adversely affect the palatability of fish, aesthetic quality, or impair the waters for any designated uses; and (12) turbidity in the receiving water shall not exceed 50 Nephelometric Turbidity Units (NTU) in streams not designated as trout waters and 10 NTU in streams, lakes, or reservoirs designated as trout waters; for lakes and reservoirs not designated as trout waters, the turbidity shall not exceed 25 NTU; if turbidity exceeds these levels due to natural background conditions, the existing turbidity level shall not be increased. As cited in Wetland Standards: (1) Liquids, fill or other solids, or dissolved gases shall not be present in amounts that may cause adverse impacts on existing wetland uses;

and (3) Materials producing color or odor shall not be present in amounts that may cause adverse impacts on existing wetland uses.

6. Erosion control matting that incorporates plastic mesh and/or plastic twine shall not be used along streambanks or within wetlands.

   Citation: 15A NCAC 02H .0506(b); 15A NCAC 02H .0507(c)
   Justification: A project that affects waters shall not be permitted unless the existing uses (including aquatic life propagation and biological integrity), and the water quality to protect such uses, are protected. Protections are necessary to ensure any remaining surface waters or wetlands, and any surface waters or wetlands downstream, continue to support existing uses during and after project completion. The Division must evaluate if the activity has avoided and minimized impacts to waters, would cause or contribute to a violation of standards, or would result in secondary or cumulative impacts.

7. If the project is covered by NPDES Construction Stormwater Permit Number NCG010000 or NPDES Construction Stormwater Permit Number NCG250000, full compliance with permit conditions including the erosion & sedimentation control plan, inspections and maintenance, self-monitoring, record keeping and reporting requirements is required.

   The North Carolina Department of Transportation (NCDOT) shall be required to be in full compliance with the conditions related to construction activities within the most recent version of their Individual NPDES Stormwater Permit Number NCS000250.

   Citation: 15A NCAC 02H .0506(b); 15A NCAC 02H .0507(c); 15A NCAC 02B .0200; 15A NCAC 02B .0231
   Justification: A project that affects waters shall not be permitted unless the existing uses, and the water quality to protect such uses, are protected. Activities must not cause water pollution that precludes any best use on a short-term or long-term basis. As cited in Stream Standards: (2) Oils, deleterious substances, or colored or other wastes: only such amounts as shall not render the waters injurious to public health, secondary recreation, or to aquatic life and wildlife, or adversely affect the palatability of fish, aesthetic quality, or impair the waters for any designated uses; and (12) turbidity in the receiving water shall not exceed 50 Nephelometric Turbidity Units (NTU) in streams not designated as trout waters and 10 NTU in streams, lakes, or reservoirs designated as trout waters; for lakes and reservoirs not designated as trout waters, the turbidity shall not exceed 25 NTU; if turbidity exceeds these levels due to natural background conditions, the existing turbidity level shall not be increased. As cited in Wetland Standards: (1) Liquids, fill or other solids, or dissolved gases shall not be present in amounts that may cause adverse impacts on existing wetland uses; and (3) Materials producing color or odor shall not be present in amounts that may cause adverse impacts on existing wetland uses.

8. All work in or adjacent to streams shall be conducted so that the flowing stream does not come in contact with the disturbed area. Approved best management practices from the most current version of the *NC Sediment and Erosion Control Manual*, or the *NC Department of Transportation Construction and Maintenance Activities Manual*, such as

sandbags, rock berms, cofferdams, and other diversion structures shall be used to minimize excavation in flowing water.

Citation: 15A NCAC 02H .0506(b); 15A NCAC 02H .0507(c); 15A NCAC 02B .0200
Justification: Surface water quality standards require that conditions of waters be suitable for all best uses provided for in state rule, and that activities must not cause water pollution that precludes any best use on a short-term or long-term basis. As cited in Stream Standards: (2) Oils, deleterious substances, or colored or other wastes: only such amounts as shall not render the waters injurious to public health, secondary recreation, or to aquatic life and wildlife, or adversely affect the palatability of fish, aesthetic quality, or impair the waters for any designated uses; and (12) turbidity in the receiving water shall not exceed 50 Nephelometric Turbidity Units (NTU) in streams not designated as trout waters and 10 NTU in streams, lakes, or reservoirs designated as trout waters; for lakes and reservoirs not designated as trout waters, the turbidity shall not exceed 25 NTU; if turbidity exceeds these levels due to natural background conditions, the existing turbidity level shall not be increased.

9. If activities must occur during periods of high biological activity (e.g. sea turtle nesting, fish spawning, or bird nesting), then biological monitoring may be required at the request of other state or federal agencies and coordinated with these activities.

   All moratoriums on construction activities established by the NC Wildlife Resources Commission (WRC), US Fish and Wildlife Service (USFWS), NC Division of Marine Fisheries (DMF), or National Marine Fisheries Service (NMFS) shall be implemented. Exceptions to this condition require written approval by the resource agency responsible for the given moratorium.

   Work within a designated trout watershed of North Carolina (as identified by the Wilmington District of the US Army Corps of Engineers), or identified state or federal endangered or threatened species habitat, shall be coordinated with the appropriate WRC, USFWS, NMFS, and/or DMF personnel.

   Citation: 15A NCAC 02H .0506(b); 15A NCAC 02H .0507(c); 15A NCAC 04B .0125
   Justification: In order to protect against impairment of water quality standards and best usage of receiving and downstream waters, water quality based management practices must be employed to protect against direct or indirect discharge of waste or other sources of water pollution. Surface water quality standards require that conditions of waters be suitable for all best uses provided for in state rule (including, at minimum: aquatic life propagation, survival, and maintenance of biological integrity, wildlife, secondary contact recreation, agriculture), and that activities must not cause water pollution that precludes any best use on a short-term or long-term basis.

10. In-stream structures installed to mimic natural channel geomorphology such as cross-vanes, sills, step-pool structures, etc. shall be designed and installed in such a manner that allow for continued aquatic life movement.

Citation: 15A NCAC 02H .0506(b); 15A NCAC 02H .0507(c)
Justification: Surface water quality standards require that conditions of waters be suitable for all best uses provided for in state rule, and that activities must not cause water pollution that precludes any best use on a short-term or long-term basis. Ensuring that in-stream structures are installed properly will ensure that surface water quality standards are met and conditions of waters are suitable for all best uses.

11. Culverts shall be designed and installed in such a manner that the original stream profiles are not altered and allow for aquatic life movement during low flows. The dimension, pattern, and profile of the stream above and below a pipe or culvert shall not be modified by widening the stream channel or by reducing the depth of the stream in connection with the construction activity. The width, height, and gradient of a proposed culvert shall be such as to pass the average historical low flow and spring flow without adversely altering flow velocity. If the width of the culvert is wider than the stream channel, the culvert shall include multiple boxes/pipes, baffles, benches and/or sills to maintain the natural width of the stream channel. If multiple culverts/pipes/barrels are used, low flows shall be accommodated in one culvert/pipe and additional culverts/pipes shall be installed such that they receive only flows above bankfull.

    Placement of culverts and other structures in streams shall be below the elevation of the streambed by one foot for all culverts with a diameter greater than 48 inches, and 20% of the culvert diameter for culverts having a diameter less than or equal to 48 inches, to allow low flow passage of water and aquatic life. If the culvert outlet is submerged within a pool or scour hole and designed to provide for aquatic passage, then culvert burial into the streambed is not required.

    For structures less than 72” in diameter/width, and topographic constraints indicate culvert slopes of greater than 2.5% culvert burial is not required, provided that all alternative options for flattening the slope have been investigated and aquatic life movement/connectivity has been provided when possible (e.g. rock ladders, cross-vanes, sills, baffles etc.). Notification, including supporting documentation to include a location map of the culvert, culvert profile drawings, and slope calculations, shall be provided to DWR 30 calendar days prior to the installation of the culvert.

    When bedrock is present in culvert locations, culvert burial is not required, provided that there is sufficient documentation of the presence of bedrock. Notification, including supporting documentation such as a location map of the culvert, geotechnical reports, photographs, etc. shall be provided to DWR a minimum of 30 calendar days prior to the installation of the culvert. If bedrock is discovered during construction, then DWR shall be notified by phone or email within 24 hours of discovery.

    Installation of culverts in wetlands shall ensure continuity of water movement and be designed to adequately accommodate high water or flood conditions. When roadways, causeways, or other fill projects are constructed across FEMA-designated floodways or wetlands, openings such as culverts or bridges shall be provided to maintain the natural

hydrology of the system as well as prevent constriction of the floodway that may result in destabilization of streams or wetlands.

The establishment of native woody vegetation and other soft stream bank stabilization techniques shall be used where practicable instead of rip-rap or other bank hardening methods.

Citation: 15A NCAC 02H .0506(b); 15A NCAC 02H .0507(c)
Justification: Surface water quality standards require that conditions of waters be suitable for all best uses provided for in state rule, and that activities must not cause water pollution that precludes any best use on a short-term or long-term basis. Ensuring that in-stream structures are installed properly will ensure that surface water quality standards are met and conditions of waters are suitable for all best uses.

12. Bridge deck drains shall not discharge directly into the stream. Stormwater shall be directed across the bridge and pre-treated through site-appropriate means to the maximum extent practicable (e.g. grassed swales, pre-formed scour holes, vegetated buffers, etc.) before entering the stream.

    Citation: 15A NCAC 02H .0506(b); 15A NCAC 02H .0507(c)
    Justification: Surface water quality standards require that conditions of waters be suitable for all best uses provided for in state rule and that activities must not cause water pollution that precludes any best use on a short-term or long-term basis. Ensuring that in-stream structures are installed properly will ensure that surface water quality standards are met and conditions of waters are suitable for all best uses.

13. Application of fertilizer to establish planted/seeded vegetation within disturbed riparian areas and/or wetlands shall be conducted at agronomic rates and shall comply with all other Federal, State and Local regulations. Fertilizer application shall be accomplished in a manner that minimizes the risk of contact between the fertilizer and surface waters.

    Citation: 15A 02H .0506(b); 15A NCAC 02H .0507(c); 15A NCAC 02B .0231
    Justification: A project that affects waters shall not be permitted unless the existing uses, and the water quality to protect such uses, are protected. Activities must not cause water pollution that precludes any best use on a short-term or long-term basis. As cited in Stream Standards: (2) Oils, deleterious substances, or colored or other wastes: only such amounts as shall not render the waters injurious to public health, secondary recreation, or to aquatic life and wildlife, or adversely affect the palatability of fish, aesthetic quality, or impair the waters for any designated uses.

14. If concrete is used during construction, then all necessary measures shall be taken to prevent direct contact between uncured or curing concrete and waters of the state. Water that inadvertently contacts uncured concrete shall not be discharged to waters of the state.

    Citation: 15A 02H .0506(b); 15A NCAC 02H .0507(c); 15A NCAC 02B .0200
    Justification: A project that affects waters shall not be permitted unless the existing uses, and the water quality to protect such uses, are protected. Activities must not cause water

pollution that precludes any best use on a short-term or long-term basis. As cited in Stream Standards: (2) Oils, deleterious substances, or colored or other wastes: only such amounts as shall not render the waters injurious to public health, secondary recreation, or to aquatic life and wildlife, or adversely affect the palatability of fish, aesthetic quality, or impair the waters for any designated uses.

15. All proposed and approved temporary fill and culverts shall be removed and the impacted area shall be returned to natural conditions within 60 calendar days after the temporary impact is no longer necessary. The impacted areas shall be restored to original grade, including each stream's original cross-sectional dimensions, planform pattern, and longitudinal bed profile. All temporarily impacted sites shall be restored and stabilized with native vegetation.

    Citation: 15A NCAC 02H.0506(b); 15A NCAC 02H .0507(c)
    Justification: A project that affects waters shall not be permitted unless the existing uses, and the water quality to protect such uses, are protected. Protections are necessary to ensure any remaining surface waters or wetlands, and any surface waters or wetlands downstream, continue to support existing uses after project completion.

16. All proposed and approved temporary pipes/culverts/rip-rap pads etc. in streams shall be installed as outlined in the most recent edition of the *North Carolina Sediment and Erosion Control Planning and Design Manual* or the *North Carolina Surface Mining Manual* or the *North Carolina Department of Transportation Best Management Practices for Construction and Maintenance Activities* so as not to restrict stream flow or cause dis-equilibrium during use of this General Certification.

    Citation: 15A NCAC 02H .0506(b); 15A NCAC 02H .0507(c)
    Justification: Surface water quality standards require that conditions of waters be suitable for all best uses provided for in state rule, and that activities must not cause water pollution that precludes any best use on a short-term or long-term basis. Ensuring that in-stream structures are installed properly will ensure that surface water quality standards are met and conditions of waters are suitable for all best uses.

17. Any rip-rap required for proper culvert placement, stream stabilization, or restoration of temporarily disturbed areas shall be restricted to the area directly impacted by the approved construction activity. All rip-rap shall be placed such that the original streambed elevation and streambank contours are restored and maintained and shall consist of clean rock or masonry material free of debris or toxic pollutants. Placement of rip-rap or other approved materials shall not result in de-stabilization of the stream bed or banks upstream or downstream of the area or be installed in a manner that precludes aquatic life passage.

    Citation: 15A NCAC 02H .0506(b); 15A NCAC 02H .0507(c)
    Justification: Surface water quality standards require that conditions of waters be suitable for all best uses provided for in state rule, and that activities must not cause water pollution that precludes any best use on a short-term or long-term basis. The Division must evaluate if

the activity has avoided and minimized impacts to waters, would cause or contribute to a violation of standards, or would result in secondary or cumulative impacts.

18. Any rip-rap used for stream or shoreline stabilization shall be of a size and density to prevent movement by wave, current action, or stream flows, and shall consist of clean rock or masonry material free of debris or toxic pollutants. Rip-rap shall not be installed in the streambed except in specific areas required for velocity control and to ensure structural integrity of bank stabilization measures.

    Citation: 15A NCAC 02H .0506(b); 15A NCAC 02H .0507(c); 15A NCAC 02B .0201
    Justification: Surface water quality standards require that conditions of waters be suitable for all best uses provided for in state rule, and that activities must not cause water pollution that precludes any best use on a short-term or long-term basis. The Division must evaluate if the activity has avoided and minimized impacts to waters, would cause or contribute to a violation of standards, or would result in secondary or cumulative impacts.

19. Rip-rap groins proposed in accordance with 15A NCAC 07H .1401 (NC Division of Coastal Management General Permit for construction of Wooden and Rip-rap Groins in Estuarine and Public Trust Waters) shall meet all the specific conditions for design and construction specified in 15A NCAC 07H .1405.

    Citation: 15A NCAC 02H .0507(c); 15A NCAC 07H .1400 et seq.
    Justification: Surface water quality standards require that conditions of waters be suitable for all best uses provided for in state rule, and that activities must not cause water pollution that precludes any best use on a short-term or long-term basis. The Division must evaluate if the activity has avoided and minimized impacts to waters, would cause or contribute to a violation of standards, or would result in secondary or cumulative impacts.

20. All mechanized equipment operated near surface waters shall be inspected and maintained regularly to prevent contamination of surface waters from fuels, lubricants, hydraulic fluids, or other toxic materials. Construction shall be staged in order to minimize the exposure of equipment to surface waters to the maximum extent practicable. Fueling, lubrication, and general equipment maintenance shall be performed in a manner to prevent, to the maximum extent practicable, contamination of surface waters by fuels and oils.

    Citation: 15A NCAC 02H .0506(b); 15A NCAC 02H .0507(c); 15A NCAC 02B .0200
    Justification: A project that affects waters shall not be permitted unless the existing uses, and the water quality to protect such uses, are protected. Activities must not cause water pollution that precludes any best use on a short-term or long-term basis. As cited in Stream Standards: (2) Oils, deleterious substances, or colored or other wastes: only such amounts as shall not render the waters injurious to public health, secondary recreation, or to aquatic life and wildlife, or adversely affect the palatability of fish, aesthetic quality, or impair the waters for any designated uses.

21. Heavy equipment working in wetlands shall be placed on mats or other measures shall be taken to minimize soil disturbance and compaction.

Citation: 15A NCAC 02H .0506(b); 15A NCAC 02H .0507(c); 15A NCAC 02B .0231
Justification: Wetland standards require maintenance or enhancement of existing uses of wetlands such that hydrologic conditions necessary to support natural biological and physical characteristics are protected; populations of wetland flora and fauna are maintained to protect biological integrity of the wetland; and materials or substances are not present in amounts that may cause adverse impact on existing wetland uses.

22. In accordance with 143-215.85(b), the permittee shall report any petroleum spill of 25 gallons or more; any spill regardless of amount that causes a sheen on surface waters; any petroleum spill regardless of amount occurring within 100 feet of surface waters; and any petroleum spill less than 25 gallons that cannot be cleaned up within 24 hours.

    Citation: 15A NCAC 02H .0507(c); N.C.G.S 143-215.85(b)
    Justification: Person(s) owning or having control over oil or other substances upon notice of discharge must immediately notify the Department, or any of its agents or employees, of the nature, location, and time of the discharge and of the measures which are being taken or are proposed to be taken to contain and remove the discharge. This action is required in order to contain or divert the substances to prevent entry into the surface waters. Surface water quality standards require that conditions of waters be suitable for all best uses provided for in state rule (including, at minimum: aquatic life propagation, survival, and maintenance of biological integrity; wildlife; secondary contact recreation; agriculture); and that activities must not cause water pollution that precludes any best use on a short-term or long-term basis.

23. The permittee and their authorized agents shall conduct all activities in a manner consistent with State water quality standards (including any requirements resulting from compliance with §303(d) of the Clean Water Act), and any other appropriate requirements of State and Federal Law.

    Citation: 15A NCAC 02H .0506(b); 15A NCAC 02H .0507(c)
    Justification: Surface water quality standards require that conditions of waters be suitable for all best uses provided for in state rule, and that activities must not cause water pollution that precludes any best use on a short-term or long-term basis. The Division must evaluate if the activity has avoided and minimized impacts to waters, would cause or contribute to a violation of standards, or would result in secondary or cumulative impacts.

24. The permittee shall require its contractors and/or agents to comply with the terms and conditions of this permit in the construction and maintenance of this project, and shall provide each of its contractors and/or agents associated with the construction or maintenance of this project with a copy of this General Certification. A copy of this General Certification shall be available at the project site during the construction and maintenance of this project.

    Citation: 15A NCAC 02H .0506(b); 15A NCAC 02H .0507(c)
    Justification: Those actually performing the work should be aware of the requirements of this 401 Water Quality General Certification to minimize water quality impacts.

History Note: Water Quality Certification (WQC) Number 4256 issued December 18, 2020 replaces WQC 4139 issued December 1, 2017 for activities eligible for USACE NWP29; WQC 4092 issued March 3, 2017; WQC 3890 issued March 19, 2012; WQC 3821 issued April 6, 2010; WQC 3631 issued March 19, 2007; WQC 3402 issued March 28, 2003; WQC 3362 issued March 18, 2002; WQC 3287 issued June 1, 2000; WQCs 3106 and 3108 issued February 11, 1997.

ANTI -SEEP COLLAR

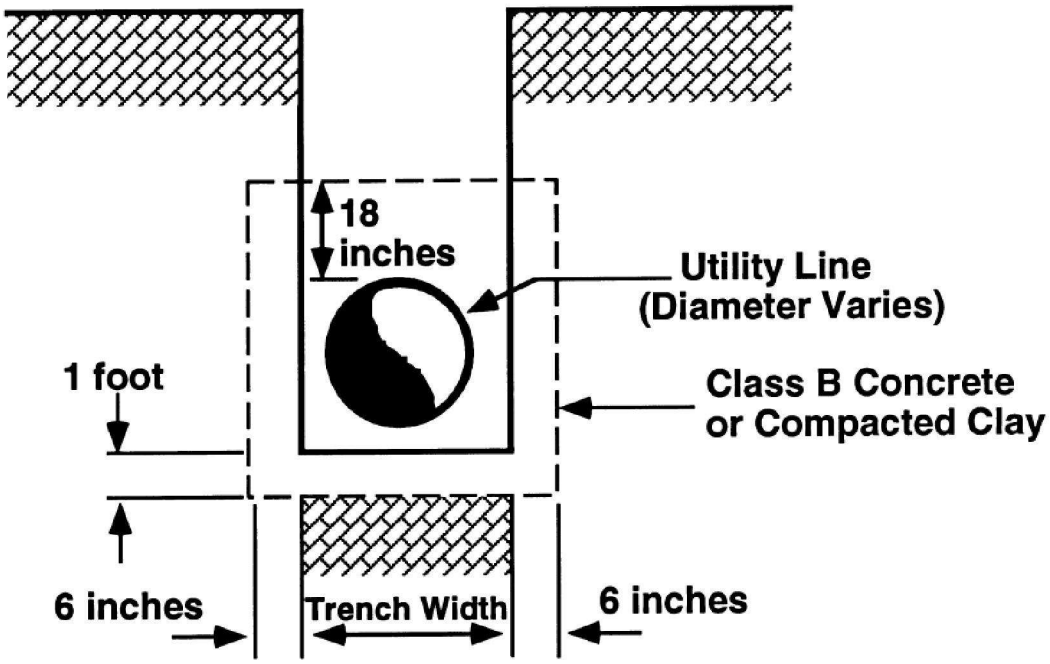

Not to exceed 40 feet

SECTION

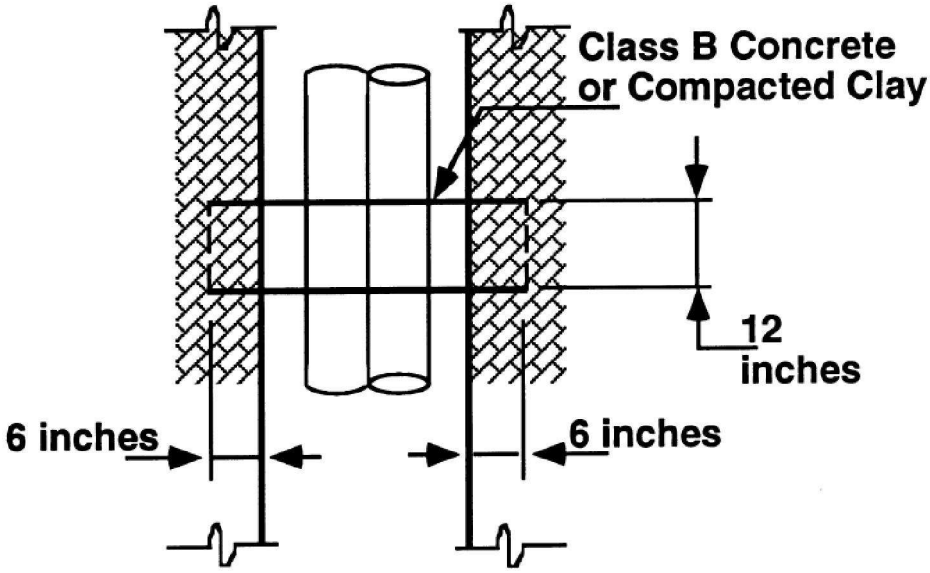

PLAN