REGENCY AT HERITAGE

PHASE 3 - CONSTRUCTION DRAWINGS

TOWN OF ROLESVILLE, WAKE COUNTY, NORTH CAROLINA

SITE DATA

PROJECT:	REGENCY AT HERITAGE
ENGINEER:	TIMMONS GROUP 5410 TRINITY ROAD; SUITE 102 RALEIGH, NC 27607 PHONE: 919-866-4507 FAX: 919-859-5663 JIM CHANDLER, PE EMAIL: JIM.CHANDLER@TIMMONS.COM
DEVELOPER:	PULTE GROUP 1225 CRESCENT GREEN DRIVE, SUITE 250 CARY, NC 27518 PHONE: 919-816-1146 RANDY KING, PE RANDY.KING@PULTEGROUP.COM

PROPERTY INFORMATION:

PROPERTIES LOCATED WITHIN THE TOWN OF WAKE FOREST

PIN	OWNER	AREA (AC)	ZONING
1749-66-3478	PULTE HOME COMPANY LLC 0 FORESTVILLE RD	16.60	GR5-CD
1749-66-9299	PULTE HOME COMPANY LLC 3637 FOXWILD LN	5.00	GR5-CD
1749-76-5204	PULTE HOME COMPANY LLC 3729 FOXWILD LN	1.39	GR5-CD
1749-76-9436	PULTE HOME COMPANY LLC 0 ROGERS RD	14.03	GR5-CD
		37.02 ACRES	

PROPERTIES LOCATED WITHIN THE TOWN OF ROLESVILLE

1749-75-2855	FORESTVILLE ROAD INVESTMENTS LLC 3700 FOXWILD LN	11.16	R-1
1749-75-9814	FORESTVILLE ROAD INVESTMENTS LLC 3800 FOXWILD LN	3.56	R-1
		14.72 ACRES	

TOTAL TRACT AREA: 51.74 ACRES

PROPOSED USE: SINGLE FAMILY RESIDENTIAL DETACHED HOUSING

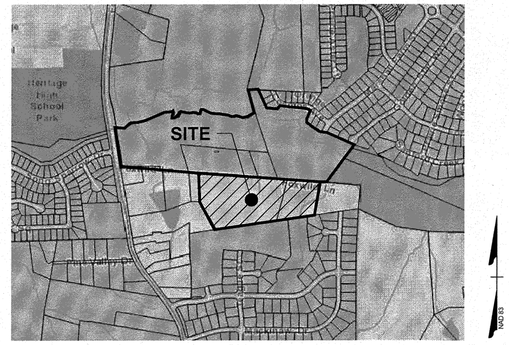

VICINITY MAP - NOT TO SCALE

Sheet List Table

Sheet Number	Sheet Title
C0.0	COVER SHEET
C1.0	EXISTING CONDITIONS PLAN
C2.0	OVERALL SUBDIVISION & OPEN SPACE PLAN
C2.1	DETAILED SUBDIVISION & OPEN SPACE PLAN
C3.1	UTILITY PLAN
C4.0	GRADING & DRAINAGE PLAN
C4.1	STORM SEWER SCHEDULE
C5.1	MARSHALL FARM ST PLAN & PROFILE
C5.2	TEAGUE ST & PROSECCO COURT PLAN & PROFILE
C6.1	NOTES & DETAILS
C6.2	NOTES & DETAILS
C6.3	NOTES & DETAILS
C6.4	NOTES & DETAILS
C7.1	STAGE 1 EROSION CONTROL PLAN
C7.2	STAGE 2 EROSION CONTROL PLAN
C7.3	EROSION CONTROL NOTES & DETAILS
C7.4	EROSION CONTROL NOTES & DETAILS
C7.5	EROSION CONTROL NOTES & DETAILS
C8.0	LIGHTING PLAN
C8.1	LIGHTING SPECS & DETAILS
C9.0	OVERALL LANDSCAPE PLAN
C9.1	LANDSCAPE PLAN

ZONING CONDITIONS FOR RII-CZ

1. APPROVAL OF THE PRELIMINARY PLAN IS SUBJECT TO STREET AND LOT RECONFIGURATION WITHIN THE PREVIOUSLY APPROVED REGENCY AT HERITAGE ADJACENT TO THE SITE IN WAKE FOREST SO AS TO COINCIDE WITH THE PROPOSED LAYOUT. NO PLATS SHALL BE RECORDED IN THIS DEVELOPMENT UNTIL FORMAL APPROVAL OF CONSTRUCTION DRAWINGS FOR A COMPLIMENTARY PLAN ON THE REGENCY AT HERITAGE SITE HAS BEEN GRANTED AND PROPERLY ALIGNED PUBLIC RIGHTS-OF-WAY IN THE AFFECTED AREAS ARE DEDICATED. ANY DEVIATIONS TO THE APPROVED PRELIMINARY PLAN ASSOCIATED SHALL REQUIRE PRIOR APPROVAL FROM THE TOWN OF ROLESVILLE.
2. ALL TWO-STORY HOMES WILL BE A MINIMUM OF 2,500 HEATED SQUARE FEET. RANCH HOMES WILL BE A MINIMUM OF 2,000 HEATED SQUARE FEET.
3. ALL HOMES SHALL HAVE, AT MINIMUM, A TWO CAR GARAGE WITH SEPARATE GARAGE DOORS. THE ENTIRE GARAGE INTERIOR WILL BE FINISHED WITH GYPSUM BOARD (IE. SHEETROCK).
4. NO HOME SHALL BE CLAD WITH ALUMINUM OR VINYL SIDING. VINYL WINDOWS, TRIM AND SOFFIT ARE ALLOWED.
5. ALL HOMES SHALL HAVE A CRAWL SPACE TYPE FOUNDATION.
6. THE ARCHITECTURAL REQUIREMENTS OF THE NEIGHBORHOOD FOR BOTH HOMES AND ACCESSORY STRUCTURES SHALL INCLUDE AN ANTI-MONOTONY POLICY WHEREBY DUPLICATE ELEVATIONS/COLORS SHALL NOT BE ALLOWED ON ADJACENT LOTS.
7. GENERAL ARCHITECTURAL REQUIREMENTS OF THE NEIGHBORHOOD WILL BE GOVERNED BY RECORDED CONDITIONS, COVENANTS, AND RESTRICTIONS. THE DEVELOPER SHALL SUBMIT A COPY OF THE CONDITIONS, COVENANTS, AND RESTRICTIONS TO THE TOWN OF ROLESVILLE TO ALLOW THE TOWN ATTORNEY TO REVIEW THEM BEFORE RECORDATION.
8. ALL REQUIRED OPEN SPACE AND DRAINAGE EASEMENTS SHALL BE OWNED AND MAINTAINED BY THE HOMEOWNERS ASSOCIATION IN PERPETUITY.
9. THE DEVELOPER SHALL PROVIDE A STREET CONNECTION TO THE ADJACENT STONEWATER SUBDIVISION TO THE SOUTH.
10. THE DEVELOPER SHALL PROVIDE MAIL KIOSKS WITHIN THE SUBDIVISION FOR MAIL SERVICE, AS APPROVED BY THE UNITED STATES POSTAL SERVICE.
11. STREETS SHALL BE MAINTAINED BY TOWN OF ROLESVILLE.

ATTENTION CONTRACTORS

The ***Construction Contractor*** responsible for the extension of water, sewer, and/or reuse, as approved in these plans, is responsible for ***contacting*** the ***Public Utilities Department*** at ***(919) 996-4540*** at least ***twenty four hours*** prior to beginning any of their construction.

Failure to notify both ***City Departments*** in advance of beginning construction, will result in the issuance of ***monetary fines,*** and require reinstallation of any water or sewer facilities not inspected as a result of this notification failure.

Failure to call for ***Inspection***, ***Install a Downstream Plug***, have ***Permitted Plans*** on the ***Jobsite***, or any other ***Violation*** of ***City of Raleigh Standards*** will result in a ***Fine and Possible Exclusion*** from future work in the ***City of Raleigh***.

PUBLIC
WATER DISTRIBUTION/EXTENTION SYTEM
THE CITY OF RALEIGH CONSENTS TO THE CONNECTION AND EXTENSION OF THE CITY'S PUBLIC WATER SYSTEM AS SHOWN ON THIS PLAN. THE MATERIAL AND CONSTRUCTION METHODS USED FOR THIS PROJECT SHALL CONFORM TO THE STANDARDS AND SPECIFICATIONS OF THE CITY'S PUBLIC UTILITIES HANDBOOK.

CITY OF RALEIGH
PUBLIC UTILITIES DEPARTMENT PERMIT # W-3672
AUTHORIZATION TO CONSTRUCT Jim Brady
DATE 2/19/20

PUBLIC
SEWER COLLECTION / EXTENTION SYTEM
THE CITY OF RALEIGH CONSENTS TO THE CONNECTION AND EXTENSION OF THE CITY'S PUBLIC SEWER SYSTEM AS SHOWN ON THIS PLAN. THE MATERIAL AND CONSTRUCTION METHODS USED FOR THIS PROJECT SHALL CONFORM TO THE STANDARDS AND SPECIFICATIONS OF THE CITY'S PUBLIC UTILITIES HANDBOOK.

CITY OF RALEIGH
PUBLIC UTILITIES DEPARTMENT PERMIT # S-4605
AUTHORIZATION TO CONSTRUCT Jim Brady
DATE 2/19/20

Rolesville
APPROVED FOR COMPLIANCE
Case #2018-03 Project: Regency @ Heritage
By: Danny Johnson Date: 3/2/2020
These plans have been approved for compliance with the Town Code of Ordinance & Standard specifications & Construction Details, subject to statements & conditions hereby incorporated by reference

North Carolina 811 www.nc811.org

THESE IMPROVEMENTS SHALL BE CONSTRUCTED IN ACCORDANCE WITH THE FOLLOWING PLANS, AND THE STANDARD SPECIFICATIONS OF THE TOWN OF ROLESVILLE. THE ENGINEER WHOSE SEAL AND SIGNATURE APPEAR ON THE PLANS CERTIFIES THAT THE STANDARD SPECIFICATIONS OF THE TOWN OF ROLESVILLE HAVE BEEN THOROUGHLY CHECKED AND ARE APPLICABLE TO THIS PROJECT. ANY EXCEPTIONS TO THE STANDARD SPECIFICATIONS APPLICABLE ARE SHOWN ON THIS SHEET.

HORIZONTAL DATUM - NAD83 / VERTICAL DATUM - NAVD88

S:\331\40013-Regency_at_Heritage_Revision\DWG\Sheet\C0\ROLESVILLE C0\40013-RL-C0.0-COVER SHEET.dwg | Plotted by Sean Hein

NORTH CAROLINA PROFESSIONAL SEAL 026465 ENGINEER FILLMORE HAMMOND JR.

THIS DRAWING PREPARED AT THE RALEIGH OFFICE
5410 Trinity Road, Suite 102 | Raleigh, NC 27607
TEL 919.866.4951 FAX 919.833.8124 www.timmons.com

YOUR VISION ACHIEVED THROUGH OURS.

REVISION DESCRIPTION	DATE

DATE	02/04/2020
DRAWN BY	331
DESIGNED BY	331
CHECKED BY	JFC
SCALE	NTS

TIMMONS GROUP

NORTH CAROLINA LICENSE NO. C-1652

REGENCY AT HERITAGE - PHASE 3

ROLESVILLE - WAKE COUNTY - NORTH CAROLINA

COVER SHEET

JOB NO. 40013

SHEET NO. C0.0

These plans and associated documents are the exclusive property of TIMMONS GROUP and may not be reproduced in whole or in part and shall not be used for any purpose whatsoever without the express written consent of TIMMONS GROUP.

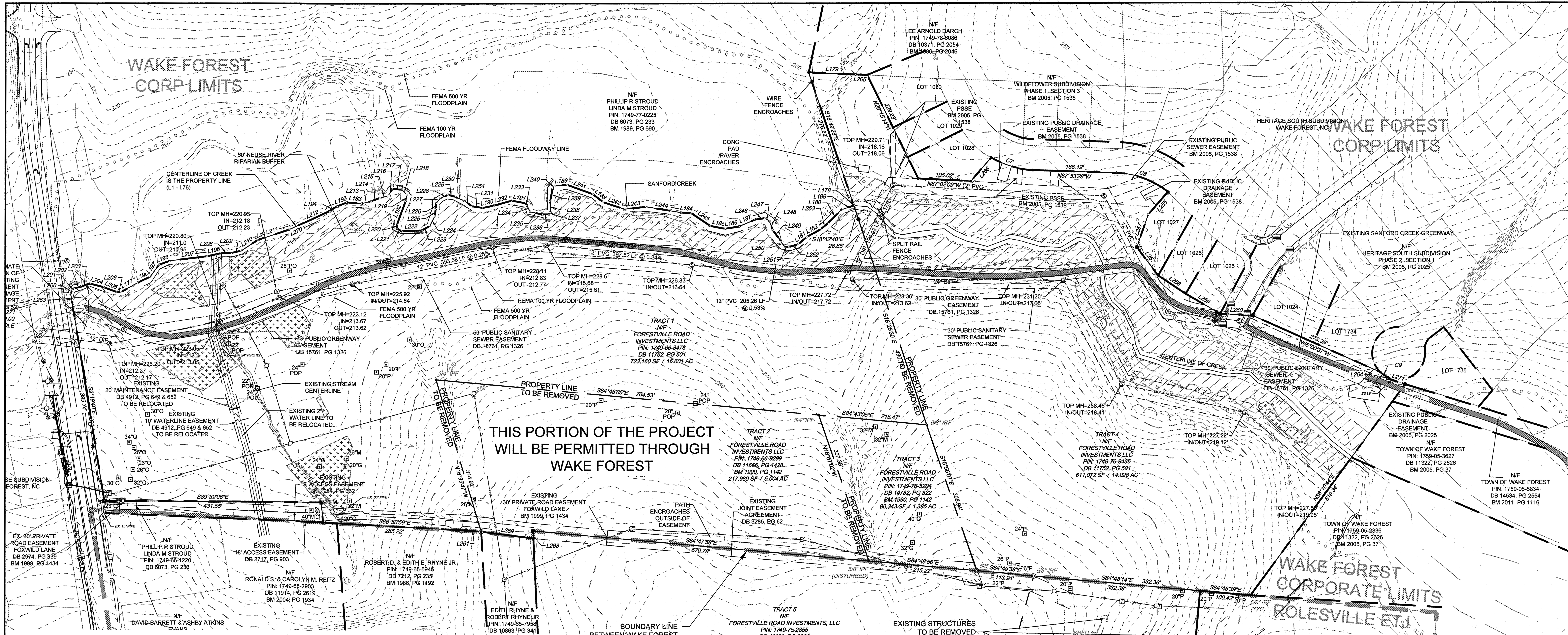

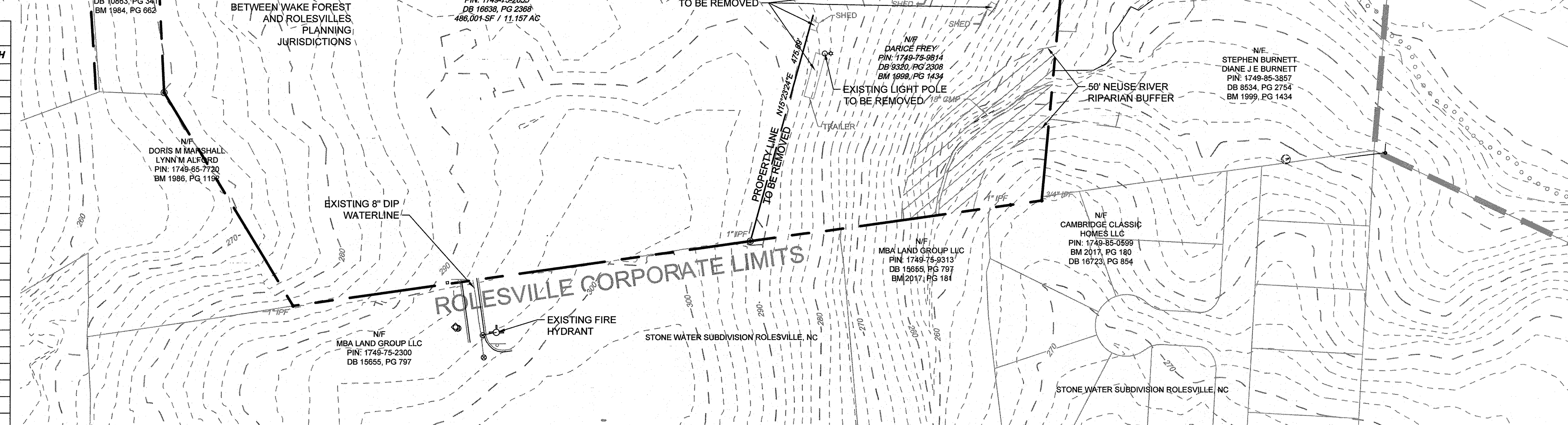

LINE TABLE

LINE	BEARING	LENGTH	LINE	BEARING	LENGTH	LINE	BEARING	LENGTH	LINE	BEARING	LENGTH
L94	N60°39'37"E	39.61'	L116	N72°03'32"E	25.66'	L138	S60°28'52"E	10.62'	L160	N83°45'01"E	43.74'
L95	N18°26'07"W	2.93'	L117	N13°59'54"E	8.43'	L139	N87°40'18"E	40.22'	L161	S80°27'47"E	69.65'
L96	S87°29'48"E	23.49'	L118	N45°05'24"E	5.42'	L140	N61°41'49"E	18.15'	L162	S56°00'56"E	45.71'
L97	N45°01'52"E	37.10'	L119	N78°48'41"E	13.20'	L141	N26°57'34"E	22.33'	L163	N82°01'40"E	19.75'
L98	N50°20'48"E	22.42'	L120	N69°13'56"E	19.81'	L142	N7°04'38"E	14.55'	L164	S55°17'04"E	10.17'
L99	N61°12'49"E	31.40'	L121	S75°09'52"E	28.82'	L143	N4°36'33"E	11.93'	L165	S20°59'36"E	19.23'
L100	S86°00'01"E	29.74'	L122	S69°48'19"E	27.49'	L144	N43°07'06"E	12.81'	L166	S36°30'52"E	26.19'
L101	S86°54'14"E	20.64'	L123	S88°15'51"E	8.54'	L145	N66°06'10"E	16.10'	L167	S33°54'23"E	13.44'
L102	S78°59'24"E	29.49'	L124	N83°00'49"E	75.08'	L146	S74°09'33"E	13.51'	L168	S80°06'55"E	9.28'
L103	N81°15'01"E	28.26'	L125	N88°03'47"E	21.43'	L147	S66°37'19"E	21.24'	L169	N72°29'10"E	19.71'
L104	N66°59'15"E	35.45'	L126	N77°56'06"E	19.71'	L148	S80°54'47"E	20.99'	L170	N50°12'34"E	19.74'
L105	S51°59'24"E	25.86'	L127	N56°54'06"E	39.21'	L149	N74°45'47"E	37.13'	L171	S55°03'03"E	18.85'
L106	N85°29'51"E	24.29'	L128	N71°36'34"E	65.48'	L150	S31°10'58"E	5.29'	L172	S40°52'25"W	59.40'
L107	N78°19'56"E	22.49'	L129	N64°54'23"E	62.96'	L151	S25°29'51"E	13.74'	L173	S19°33'18"W	68.44'
L108	S79°52'05"E	28.23'	L130	N75°49'21"E	18.10'	L152	S77°22'09"E	24.33'	L174	S36°51'02"E	70.79'
L109	S20°17'33"W	48.17'	L131	N69°11'14"E	19.08'	L153	N89°43'30"E	14.19'	L175	S56°23'57"E	66.13'
L110	N69°27'05"E	22.03'	L132	N76°47'10"E	16.44'	L154	N31°37'24"E	6.23'	L176	S60°03'33"E	78.98'
L111	N57°50'56"E	19.12'	L133	N32°16'01"E	16.38'	L155	N3°05'27"W	20.74'	L177	S86°50'22"E	64.32'
L112	N77°28'46"E	28.00'	L134	S86°21'32"E	19.00'	L156	N11°00'15"E	24.65'	L178	N85°25'17"W	30.20'
L113	N65°08'01"E	26.09'	L135	N42°48'23"W	14.54'	L157	N36°54'20"E	8.05'	L179	N4°46'14"W	40.23'
L114	N35°50'52"E	29.73'	L136	S10°53'52"W	11.76'	L158	S70°16'29"E	54.22'	L180	N9°19'40"W	15.91'
L115	N69°48'16"E	22.32'	L137	S2°54'48"W	9.90'	L159	S71°41'07"E	44.66'	L181	S3°16'43"W	3.13'

CURVE TABLE

CURVE	RADIUS	LENGTH	TANGENT	DELTA	CHORD BEARING	CHORD
C4	175.00'	87.23'	44.54'	28°33'35"	S73°35'45"E	86.33'
C5	175.00'	111.55'	57.75'	36°31'24"	S69°41'27"E	109.67'
C6	52.50'	17.31'	8.74'	18°53'35"	S55°04'06"E	17.23'

TOTAL DBH OF SPECIMEN TREES TO BE REMOVED

TREE SPECIMEN TO BE REMOVED	QUANTITY PER TREE PER DBH (INCHES)												TOTAL DBH PER TREE (QTY. * DBH)
	20	22	23	24	26	28	30	32	34	36	38	40	
QTY. OF OAKS	1		1		3		3	1	1			1	
QTY. OF PINES	10	2		1	2								320
QTY. OF POPLARS	4	3		3		1							246
QTY. OF MAPLES					1	1		3		1			186
QTY. OF GUMS	1			1				1					76
							TOTAL DBH REMOVED (INCHES)						828

● SPECIMAN TREE

⊡ SPECIMAN TREE TO BE REMOVED

EX TREE LABLE DESCRIPTIONS

● 12" P SYM', SIZE AND SPECIES

A	ASH	H	HICKORY
B	BIRCH	M	MAPLE
C	CEDAR	MIM	MIMOSA
CH	CHERRY	O	OAK
D	DOGWOOD	P	PINE
G	SWEET GUM	PO	POPLAR
		S	SYCAMORE

SURVEY NOTES:

1) TITLE REPORT SHOWN HEREON BY: INVESTORS TITLE INSURANCE COMPANY, DATED: 07/21/17
2) AREAS COMPUTED BY COORDINATE METHOD.
3) PROPERTY SHOWN HEREON IS SUBJECT TO ALL RIGHTS-OF-WAY, EASEMENTS AND RESTRICTIONS OF RECORD.
4) ALL DISTANCES SHOWN ON SURVEY ARE HORIZONTAL GROUND DISTANCES UNLESS OTHERWISE NOTED.
5) THIS SURVEY DOES NOT REPRESENT A TITLE SEARCH BY THIS FIRM.
6) RIGHTS-OF-WAY INFORMATION IS BASED ON DEEDS AND MAPS OF RECORD.
7) BASIS OF BEARING SHOWN HEREON IS NAD83(2011).
8) BOUNDARY INFORMATION IS BASED IN PART, ON DEEDS AND MAPS OF RECORD, BY OTHERS, AND IN PART, BY AN ACTUAL FIELD SURVEY BY THIS FIRM.
10) THIS SITE LIES IN ZONE X, WHICH IS ACCORDING TO FLOOD INSURANCE RATE MAP 3720171000J PANEL 1710,WITH AN EFFECTIVE DATE OF MAY 2, 2006.
11) WETLANDS HAVE BEEN INVESTIGATED AND ARE SHOWN ON THIS SITE.
12) ALL PROPERTY CORNERS FOUND ARE 5/8" IRON PIPE UNLESS OTHERWISE NOTED HEREON.
13) ALL PROPERTY CORNERS SET ARE 5/8" IRON REBAR UNLESS OTHERWISE NOTED HEREON.

NOTES

1. BOUNDARY TAKEN FROM SURVEY BY TIMMONS GROUP.
2. TOPOGRAPHIC INFORMATION TAKEN FROM COMBINATION OF SURVEY AND GIS DATA.
3. WETLAND AND STREAM DELINEATION BY S&EC, PA.
4. THE SUBJECT PROPERTY CONTAINS FEMA MAPPED FLOOD ZONES.

LEGEND

- 100-YR FLOODPLAIN
- EXISTING WETLANDS
- NEUSE RIVER BUFFER

NAD 83

SCALE 1"=100'

0 100' 200'

NORTH CAROLINA PROFESSIONAL SEAL 026466 ENGINEER JAMES FILLMORE CHANDLER JR.

THIS DRAWING PREPARED AT THE **RALEIGH OFFICE**
5410 Trinity Road, Suite 102 | Raleigh, NC 27607
TEL 919.866.4951 FAX 919.833.8124 www.timmons.com

DATE	REVISION DESCRIPTION

YOUR VISION ACHIEVED THROUGH OURS.

DATE: 02/04/2020
DRAWN BY: 331
DESIGNED BY: 331
CHECKED BY: JFC
SCALE: 1" = 100'

TIMMONS GROUP
NORTH CAROLINA LICENSE NO. C-1652

REGENCY AT HERITAGE - PHASE 3
ROLESVILLE - WAKE COUNTY - NORTH CAROLINA

EXISTING CONDITIONS PLAN

JOB NO. 40013
SHEET NO. C1.0

These plans and associated documents are the exclusive property of TIMMONS GROUP and may not be reproduced in whole or in part and shall not be used for any purpose whatsoever, inclusive, but not limited to construction, bidding, and/or construction staking without the express written consent of TIMMONS GROUP.

S:\331\40013-Regency_at_Heritage_Revision\DWG\Sheet\CD\ROLESVILLE CD\40013-RL-C1.0-EXISTING CONDITIONS PLAN.dwg | Plotted by Sean Hein

RESIDENTIAL YIELD STREET
(50' PUBLIC R/W)
(TEAGUE STREET, PROSECCO COURT, & MARSHALL FARM STREET WITHIN PHASE 3)

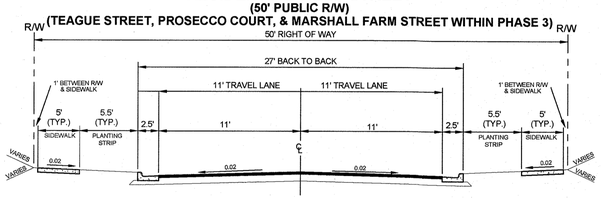

OPEN SPACE STATISTICS			
TOWN OF WAKE FOREST			
OPEN SPACE #1	0.10	Ac	
OPEN SPACE #2	0.83	Ac	
OPEN SPACE #3	7.22	Ac	
OPEN SPACE #4	6.03	Ac	
OPEN SPACE #5	2.20	Ac	
OPEN SPACE #6	0.09	Ac	
TOTAL	16.47	Ac	44.5%
TOWN OF ROLESVILLE			
OPEN SPACE #7	1.17	Ac	
OPEN SPACE #8	1.19	Ac	
TOTAL	2.36	Ac	16.0%

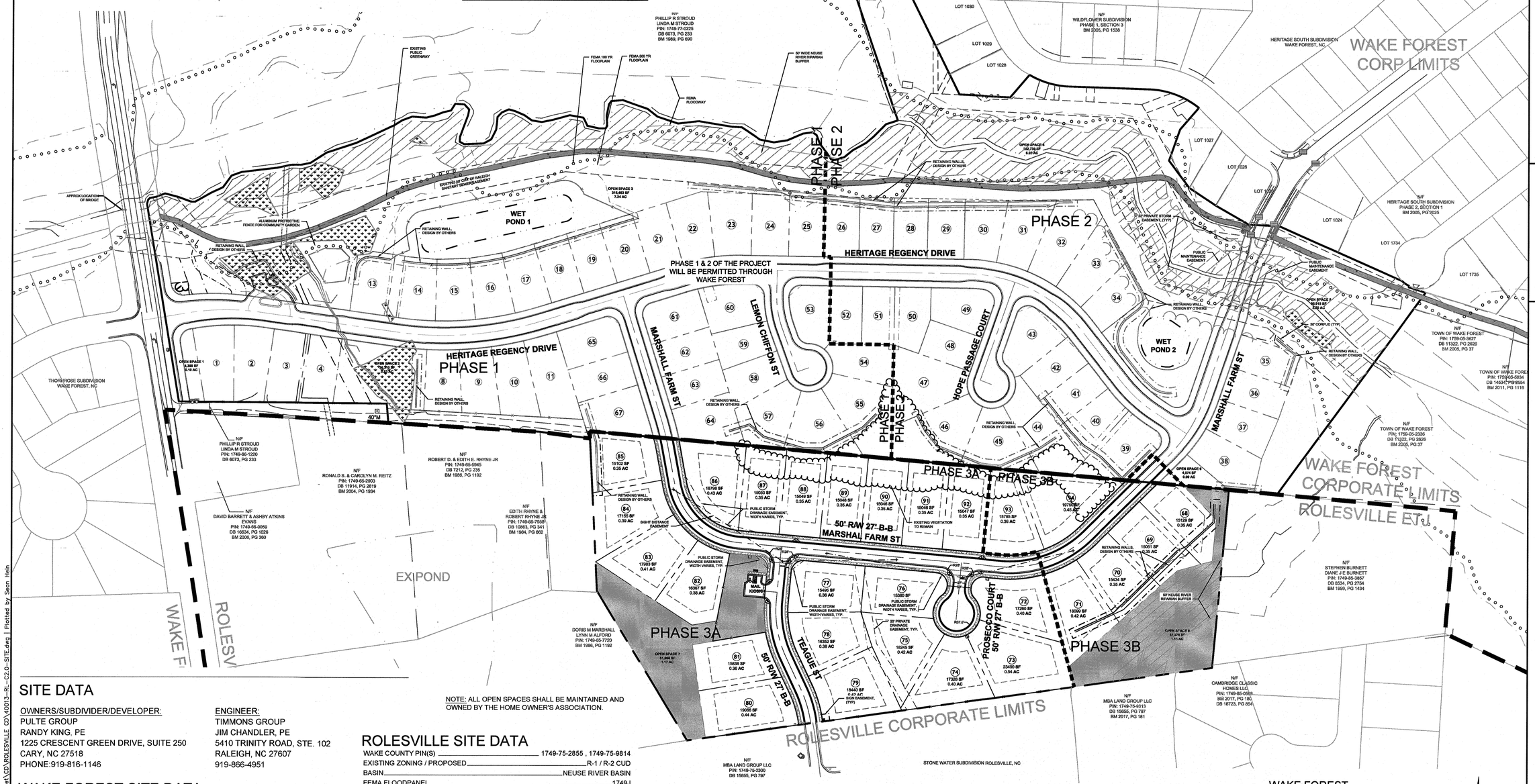

SITE DATA

OWNERS/SUBDIVIDER/DEVELOPER:
PULTE GROUP
RANDY KING, PE
1225 CRESCENT GREEN DRIVE, SUITE 250
CARY, NC 27518
PHONE:919-816-1146

ENGINEER:
TIMMONS GROUP
JIM CHANDLER, PE
5410 TRINITY ROAD, STE. 102
RALEIGH, NC 27607
919-866-4951

NOTE: ALL OPEN SPACES SHALL BE MAINTAINED AND OWNED BY THE HOME OWNER'S ASSOCIATION.

WAKE FOREST SITE DATA

WAKE COUNTY PIN(S)	1749-66-3478, 1749-66-9299, 1749-76-5204, 1749-76-9436
EXISTING ZONING	GR5-CD
BASIN	NEUSE RIVER BASIN
FEMA FLOODPANEL	1749J
GROSS PROJECT AREA	37.02 AC (SURVEY)
AREA IN FUTURE INTERNAL PUBLIC STREET R/W	4.92 AC
AREA IN FORESTVILLE ROAD 20' R/W DEDICATION	0.19 AC
NET PROJECT AREA	31.91 AC
AREA IN RESIDENTIAL LOTS	15.44 AC
AREA IN PRIVATE OPEN SPACE	16.47 AC
NUMBER OF SINGLE FAMILY DETACHED RESIDENTIAL LOTS	67 UNITS
PROPOSED DENSITY	63 / 37.02 — 1.70 UN/AC
MINIMUM LOT SIZE	8,007 SF
AVERAGE LOT SIZE	10,209 SF
MINIMUM LOT WIDTH	50 LF
MAXIMUM BUILDING HEIGHT	3 STORIES

ROLESVILLE SITE DATA

WAKE COUNTY PIN(S)	1749-75-2855 , 1749-75-9814
EXISTING ZONING / PROPOSED	R-1 / R-2 CUD
BASIN	NEUSE RIVER BASIN
FEMA FLOODPANEL	1749J
GROSS PROJECT AREA	14.72 AC (DEEDS & SURVEY)
AREA IN FUTURE INTERNAL PUBLIC STREET R/W	2.02 AC
AREA IN FORESTVILLE ROAD R/W DEDICATION	0.00 AC
NET PROJECT AREA	12.70 AC
AREA IN RESIDENTIAL LOTS	10.34 AC
AREA IN PRIVATE OPEN SPACE	2.36 AC
IMPERVIOUS AREA	4.38 AC
STREETS	0.86 AC
SIDEWALK	0.36 AC
MAIL KIOSK	0.06 AC
RESIDENTIAL LOTS (5,000 SF PER LOT)	3.10 AC
NUMBER OF SINGLE FAMILY DETACHED RESIDENTIAL LOTS	27 UNITS
PROPOSED DENSITY	27 / 14.72 — 1.83 UN/AC
MINIMUM LOT SIZE	15,041 SF
AVERAGE LOT SIZE	16,720 SF
MINIMUM LOT WIDTH	85 LF
MAXIMUM BUILDING HEIGHT	3 STORIES

PUBLIC IMPROVEMENT QUANTITIES	WAKE FOREST		ROLESVILLE		
PHASE	PHASE 1	PHASE 2	PHASE 3A	PHASE 3B	TOTAL
NUMBER OF LOTS	36	27	21	6	90
LOT / BLDG NUMBERS BY PHASE	1-40	41-67	72-92	68-71, 93-94	1-94
OPEN SPACE	YES (PRVT.)	YES (PRVT.)	YES (PRVT.)	YES (PRVT.)	YES (PRVT.)
NUMBER OF OPEN SPACE LOTS	3	3	1	1	8
LINEAR FOOTAGE OF PUBLIC WATERLINE	2,042 L.F.	1,723 L.F.	1,438 L.F.	271 L.F.	5,474 L.F.
LINEAR FOOTAGE OF PUBLIC SANITARY SEWER	2,004 L.F.	1,604 L.F.	1,168 L.F.	290 L.F.	5,066 L.F.
LINEAR FOOTAGE OF PUBLIC SIDEWALK	3,966 L.F.	3,311 L.F.	2,444 L.F.	658 L.F.	10,379 L.F.
LINEAR FOOTAGE OF PUBLIC STREETS	1,932 L.F.	1,720 L.F.	1,365 L.F.	329 L.F.	5,346 L.F.
LINEAR FOOTAGE OF GREENWAY	121 L.F.	0 L.F.	0 L.F.	0 L.F.	121 L.F.
LINEAR FOOTAGE OF CURB AND GUTTER	4,133 L.F.	3,260 L.F.	2,912 L.F.	668 L.F.	10,973 L.F.
LINEAR FOOTAGE OF STORM DRAINAGE	2,736 L.F.	1,917 L.F.	1,385 L.F.	208 L.F.	6,246 L.F.

WAKE FOREST SETBACKS TABLE

FRONT YARD = 20 feet
SIDE YARD = 8 feet
REAR YARD = 25 feet
CORNER YARD = 20 feet

ROLESVILLE SETBACKS TABLE

FRONT YARD = 30 feet
SIDE YARD = 12 feet
REAR YARD = 25 feet
CORNER YARD = 22 feet

NAD 83

SCALE 1"=100'
0 100' 200'

THIS DRAWING PREPARED AT THE
RALEIGH OFFICE
5410 Trinity Road, Suite 102 | Raleigh, NC 27607
TEL 919.866.4951 FAX 919.833.8124 www.timmons.com

YOUR VISION ACHIEVED THROUGH OURS.

REVISION DESCRIPTION	DATE

DATE	02/04/2020
DRAWN BY	331
DESIGNED BY	331
CHECKED BY	JFC
SCALE	1" = 100'

TIMMONS GROUP
NORTH CAROLINA LICENSE NO. C-1652

REGENCY AT HERITAGE - PHASE 3
ROLESVILLE - WAKE COUNTY - NORTH CAROLINA

OVERALL SUBDIVISION & OPEN SPACE PLAN

JOB NO. 40013
SHEET NO. C2.0

These plans and associated documents are the exclusive property of TIMMONS GROUP and may not be reproduced in whole or in part and shall not be used for any purpose whatsoever, inclusive, but not limited to construction, bidding, and/or construction staking without the express written consent of TIMMONS GROUP.

S:\331\40013--Regency_at_Heritage_Revision\DWG\Sheet\CD\ROLESVILLE CD\40013--RL--C2.0--SITE.dwg | Plotted by Sean Hein

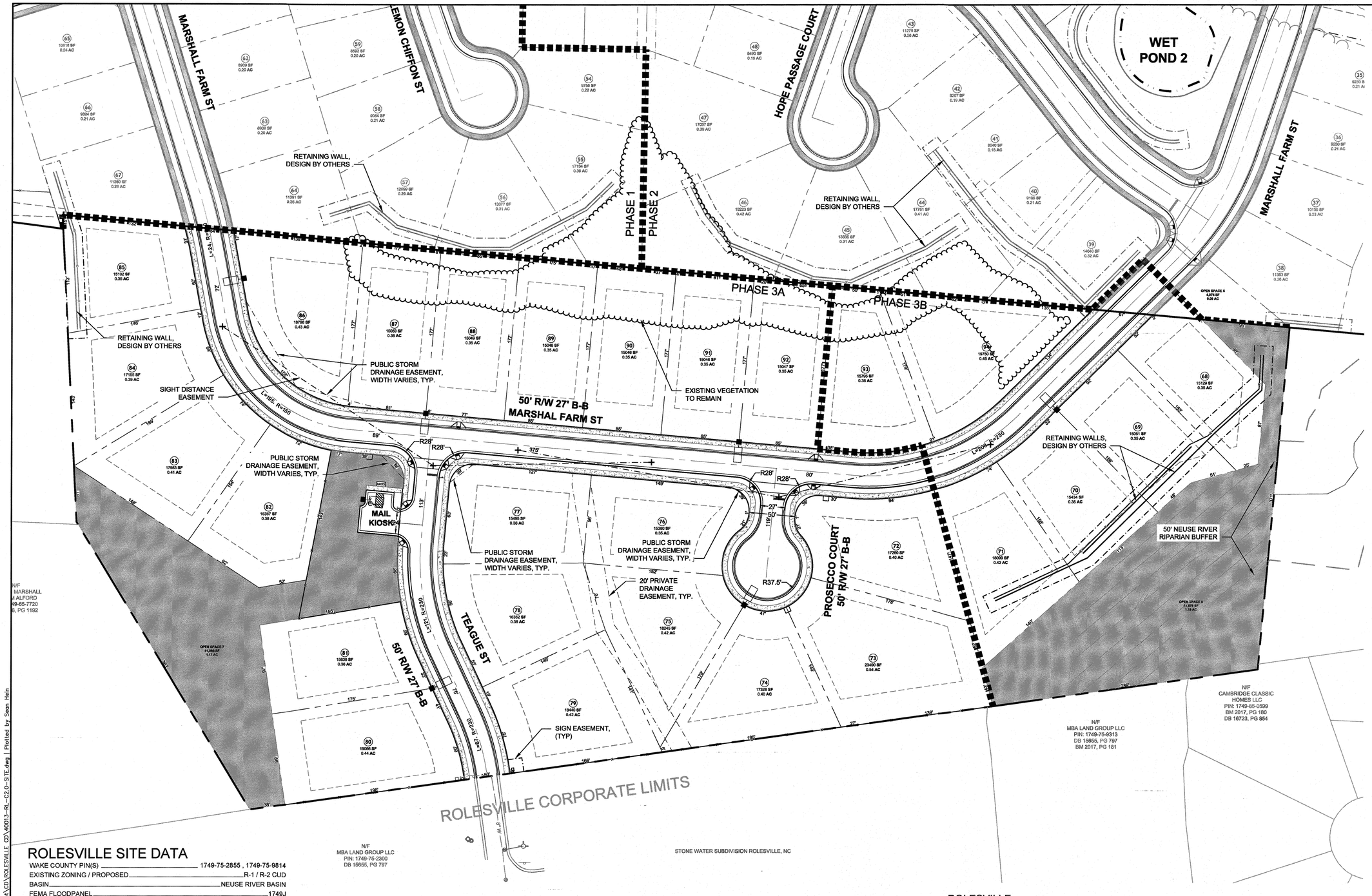

ROLESVILLE SITE DATA

WAKE COUNTY PIN(S)	1749-75-2855 , 1749-75-9814
EXISTING ZONING / PROPOSED	R-1 / R-2 CUD
BASIN	NEUSE RIVER BASIN
FEMA FLOODPANEL	1749J
GROSS PROJECT AREA	14.72 AC (DEEDS & SURVEY)
AREA IN FUTURE INTERNAL PUBLIC STREET R/W	2.02 AC
AREA IN FORESTVILLE ROAD R/W DEDICATION	0.00 AC
NET PROJECT AREA	12.70 AC
AREA IN RESIDENTIAL LOTS	10.34 AC
AREA IN PRIVATE OPEN SPACE	2.36 AC
IMPERVIOUS AREA	4.38 AC
STREETS	0.86 AC
SIDEWALK	0.36 AC
MAIL KIOSK	0.06 AC
RESIDENTIAL LOTS (5,000 SF PER LOT)	3.10 AC
NUMBER OF SINGLE FAMILY DETACHED RESIDENTIAL LOTS	27 UNITS
PROPOSED DENSITY 27 / 14.72	1.83 UN/AC
MINIMUM LOT SIZE	15,041 SF
AVERAGE LOT SIZE	16,720 SF
MINIMUM LOT WIDTH	85 LF
MAXIMUM BUILDING HEIGHT	3 STORIES

PUBLIC IMPROVEMENT QUANTITIES	ROLESVILLE	
PHASE	PHASE 3A	PHASE 3B
NUMBER OF LOTS	21	6
LOT / BLDG NUMBERS BY PHASE	72-92	68-71, 93-94
OPEN SPACE	YES (PRVT.)	YES (PRVT.)
NUMBER OF OPEN SPACE LOTS	1	1
LINEAR FOOTAGE OF PUBLIC WATERLINE	1,438 L.F.	271 L.F.
LINEAR FOOTAGE OF PUBLIC SANITARY SEWER	1,168 L.F.	290 L.F.
LINEAR FOOTAGE OF PUBLIC SIDEWALK	2,444 L.F.	658 L.F.
LINEAR FOOTAGE OF PUBLIC STREETS	1,365 L.F.	329 L.F.
LINEAR FOOTAGE OF GREENWAY	0 L.F.	0 L.F.
LINEAR FOOTAGE OF CURB AND GUTTER	2,912 L.F.	668 L.F.
LINEAR FOOTAGE OF STORM DRAINAGE	1,385 L.F.	208 L.F.

ROLESVILLE SETBACKS TABLE

FRONT YARD = 30 feet
SIDE YARD = 12 feet
REAR YARD = 25 feet
CORNER YARD = 22 feet

LEGEND

- EXISTING WETLANDS
- PRIMARY OPEN SPACE
- SECONDARY OPEN SPACE
- COMMON GREEN

NOTE: ALL OPEN SPACES SHALL BE MAINTAINED AND OWNED BY THE HOME OWNER'S ASSOCIATION.

LEGEND

- PROPERTY LINE
- EXISTING RIGHT-OF-WAY
- EXISTING ROAD CENTER
- ADJACENT PROPERTY LINE
- 100-YR FLOODPLAIN
- PROPOSED PERIMETER BUFFER
- PROPOSED DRAIN EASEMENT
- PROPOSED RIGHT-OF-WAY
- PROPOSED LOT LINE
- BUILDING SETBACK
- PROPOSED ROAD CENTER
- PROPOSED EOP

NAD 83

SCALE 1"=50'
0 50' 100'

THIS DRAWING PREPARED AT THE
5410 Trinity Road, Suite 102 | Raleigh, NC 27607
TEL 919.866.4951 FAX 919.833.8124 www.timmons.com

YOUR VISION ACHIEVED THROUGH OURS.

REVISION DESCRIPTION	DATE

DATE	02/04/2020
DRAWN BY	331
DESIGNED BY	331
CHECKED BY	JFC
SCALE	1" = 50'
JOB NO.	40013
SHEET NO.	C2.1

TIMMONS GROUP

NORTH CAROLINA LICENSE NO. C-1652

REGENCY AT HERITAGE - PHASE 3

ROLESVILLE - WAKE COUNTY - NORTH CAROLINA

DETAILED SUBDIVISION & OPEN SPACE PLAN

These plans and associated documents are the exclusive property of TIMMONS GROUP and may not be reproduced in whole or in part and shall not be used for any purpose whatsoever, inclusive, but not limited to construction, bidding, and/or construction stacking without the express written consent of TIMMONS GROUP.

S:\331\40013-Regency_at_Heritage_Revision\DWG\Sheet\CD\ROLESVILLE CD\40013-RL-C2.0-SITE.dwg | Plotted by Sean Hein

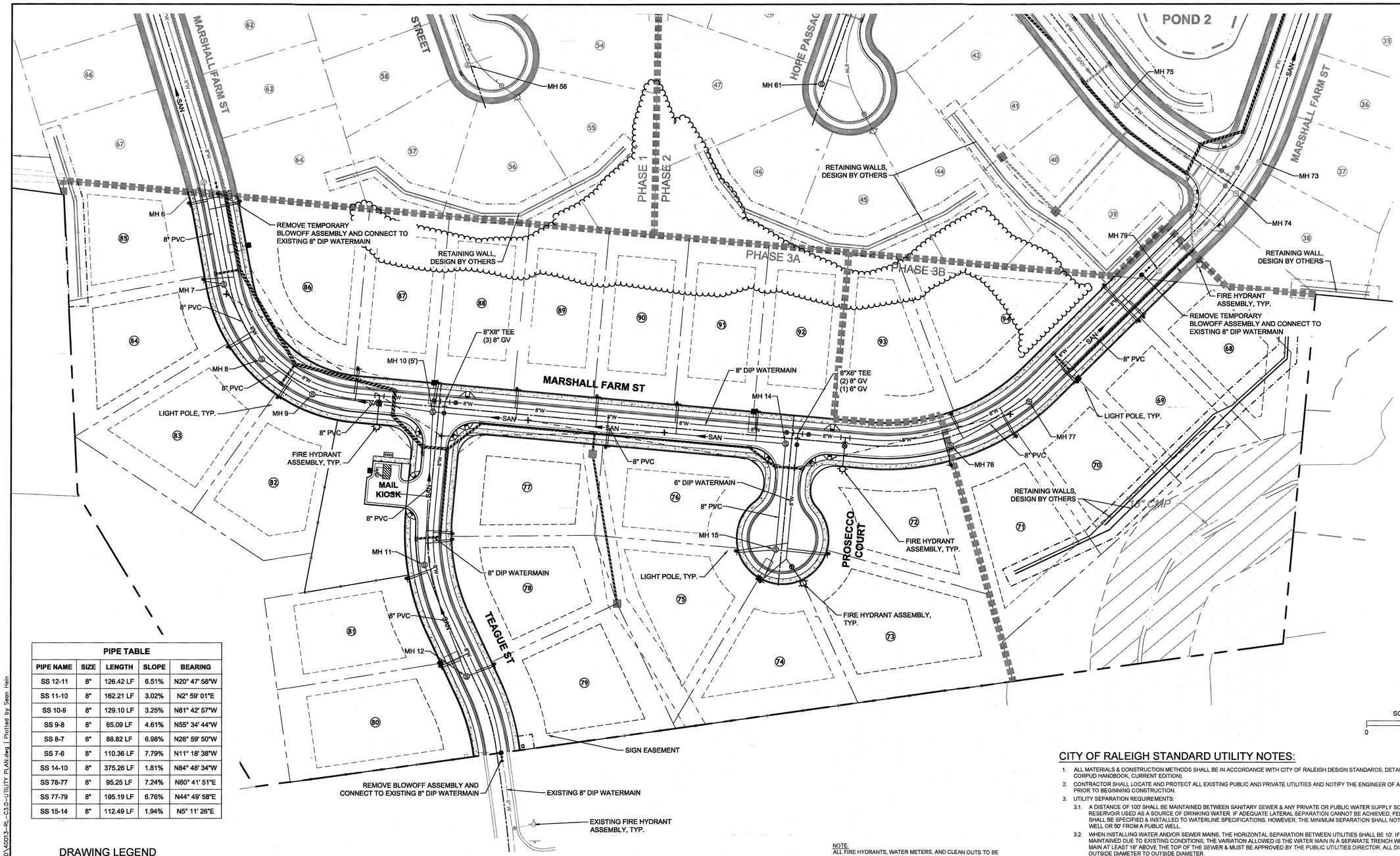

PIPE TABLE				
PIPE NAME	SIZE	LENGTH	SLOPE	BEARING
SS 12-11	8"	126.42 LF	6.51%	N20° 47' 58"W
SS 11-10	8"	162.21 LF	3.02%	N2° 59' 01"E
SS 10-9	8"	129.10 LF	3.25%	N81° 42' 57"W
SS 9-8	8"	65.09 LF	4.61%	N55° 34' 44"W
SS 8-7	8"	88.82 LF	6.98%	N26° 59' 50"W
SS 7-6	8"	110.36 LF	7.79%	N11° 18' 38"W
SS 14-10	8"	375.26 LF	1.81%	N84° 48' 34"W
SS 78-77	8"	95.25 LF	7.24%	N60° 41' 51"E
SS 77-79	8"	195.19 LF	6.76%	N44° 49' 58"E
SS 15-14	8"	112.49 LF	1.94%	N5° 11' 26"E

DRAWING LEGEND

SEWER

- SAN — PROPOSED SANITARY SEWER
- SANITARY MANHOLE

WATER

- EXISTING WATER LINE
- PROPOSED WATER LINE
- WATER VALVE
- FIRE HYDRANT
- BLOWOFF ASSEMBLY
- 1" TYPE "K" COPPER WATER SERVICE & 1" METER
- 4" SCH 40 PVC SAN. SEWER SERVICE & CLEANOUT

STORM DRAINAGE

- STORM DRAINAGE
- STORM JUNCTION BOX
- CURB INLET
- DROP INLET

LEGEND

- 100-YR FLOODPLAIN
- EXISTING WETLANDS
- NEUSE RIVER BUFFER

LEGEND

- PROPERTY LINE
- EXISTING RIGHT-OF-WAY
- EXISTING ROAD CENTER
- ADJACENT PROPERTY LINE
- PROPOSED PERIMETER BUFFER
- PROPOSED DRAIN EASEMENT
- PROPOSED RIGHT-OF-WAY
- PROPOSED LOT LINE
- BUILDING SETBACK
- PROPOSED ROAD CENTER
- PROPOSED EOP

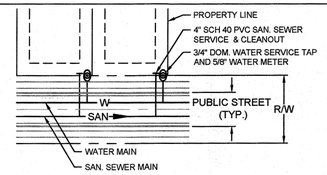

NOTE:

1. DOMESTIC WATER AND SAN. SEWER SERVICES SHALL BE INSTALLED PER CITY OF RALEIGH DESIGN STANDARDS, DETAILS & SPECIFICATIONS.
2. DOMESTIC WATER AND SAN. SEWER SERVICES SHALL BE INSTALLED ON THE LOW SIDE OF THE LOT.

TYPICAL UTILITY SERVICE LOCATION

N.T.S.

NOTE:
ALL FIRE HYDRANTS, WATER METERS, AND CLEAN OUTS TO BE PLACED JUST INSIDE OF THE ROW LINE AND SHALL NOT CONFLICT WITH THE PROPOSED SIDEWALKS.

PUBLIC
SEWER COLLECTION / EXTENTION SYTEM

THE CITY OF RALEIGH CONSENTS TO THE CONNECTION AND EXTENSION OF THE CITY'S PUBLIC SEWER SYSTEM AS SHOWN ON THIS PLAN. THE MATERIAL AND CONSTRUCTION METHODS USED FOR THIS PROJECT SHALL CONFORM TO THE STANDARDS AND SPECIFICATIONS OF THE CITY'S PUBLIC UTILITIES HANDBOOK.

CITY OF RALEIGH
PUBLIC UTILITIES DEPARTMENT PERMIT # S-4605
AUTHORIZATION TO CONSTRUCT
DATE 2/19/20

PUBLIC
WATER DISTRIBUTION/EXTENTION SYTEM

THE CITY OF RALEIGH CONSENTS TO THE CONNECTION AND EXTENSION OF THE CITY'S PUBLIC WATER SYSTEM AS SHOWN ON THIS PLAN. THE MATERIAL AND CONSTRUCTION METHODS USED FOR THIS PROJECT SHALL CONFORM TO THE STANDARDS AND SPECIFICATIONS OF THE CITY'S PUBLIC UTILITIES HANDBOOK.

CITY OF RALEIGH
PUBLIC UTILITIES DEPARTMENT PERMIT # W-3672
AUTHORIZATION TO CONSTRUCT
DATE 2/19/20

CITY OF RALEIGH STANDARD UTILITY NOTES:

1. ALL MATERIALS & CONSTRUCTION METHODS SHALL BE IN ACCORDANCE WITH CITY OF RALEIGH DESIGN STANDARDS, DETAILS & SPECIFICATIONS (REFERENCE: CORPUD HANDBOOK, CURRENT EDITION).
2. CONTRACTOR SHALL LOCATE AND PROTECT ALL EXISTING PUBLIC AND PRIVATE UTILITIES AND NOTIFY THE ENGINEER OF ANY DISCREPANCIES OR CONFLICTS PRIOR TO BEGINNING CONSTRUCTION.
3. UTILITY SEPARATION REQUIREMENTS:
   - 3.1. A DISTANCE OF 100' SHALL BE MAINTAINED BETWEEN SANITARY SEWER & ANY PRIVATE OR PUBLIC WATER SUPPLY SOURCE SUCH AS AN IMPOUNDED RESERVOIR USED AS A SOURCE OF DRINKING WATER. IF ADEQUATE LATERAL SEPARATION CANNOT BE ACHIEVED, FERROUS SANITARY SEWER PIPE SHALL BE SPECIFIED & INSTALLED TO WATERLINE SPECIFICATIONS. HOWEVER, THE MINIMUM SEPARATION SHALL NOT BE LESS THAN 25' FROM A PRIVATE WELL OR 50' FROM A PUBLIC WELL.
   - 3.2. WHEN INSTALLING WATER AND/OR SEWER MAINS, THE HORIZONTAL SEPARATION BETWEEN UTILITIES SHALL BE 10'. IF THIS SEPARATION CANNOT BE MAINTAINED DUE TO EXISTING CONDITIONS, THE VARIATION ALLOWED IS THE WATER MAIN IN A SEPARATE TRENCH WITH THE ELEVATION OF THE WATER MAIN AT LEAST 18" ABOVE THE TOP OF THE SEWER & MUST BE APPROVED BY THE PUBLIC UTILITIES DIRECTOR. ALL DISTANCES ARE MEASURED FROM OUTSIDE DIAMETER TO OUTSIDE DIAMETER.
   - 3.3. WHERE IT IS IMPOSSIBLE TO OBTAIN PROPER SEPARATION, OR ANYTIME A SANITARY SEWER PASSES OVER A WATER MAIN, DIP MATERIALS OR STEEL ENCASEMENT EXTENDED 10' ON EACH SIDE OF CROSSING MUST BE SPECIFIED & INSTALLED TO WATERLINE SPECIFICATIONS.
   - 3.4. 5.0' MINIMUM HORIZONTAL SEPARATION IS REQUIRED BETWEEN ALL SANITARY SEWER & STORM SEWER FACILITIES, UNLESS DIP MATERIAL IS SPECIFIED FOR SANITARY SEWER.
   - 3.5. MAINTAIN 18" MIN. VERTICAL SEPARATION AT ALL WATER MAIN & RCP STORM DRAIN CROSSINGS; MAINTAIN 24" MIN. VERTICAL SEPARATION AT ALL SANITARY SEWER & RCP STORM DRAIN CROSSINGS. WHERE ADEQUATE SEPARATIONS CANNOT BE ACHIEVED, SPECIFY DIP MATERIALS & A CONCRETE CRADLE HAVING 6" MIN. CLEARANCE (PER CORPUD DETAILS W-41 & S-49).
   - 3.6. ALL OTHER UNDERGROUND UTILITIES SHALL CROSS WATER & SEWER FACILITIES WITH 18" MIN. VERTICAL SEPARATION REQUIRED.
4. ANY NECESSARY FIELD REVISIONS ARE SUBJECT TO REVIEW & APPROVAL OF AN AMENDED PLAN &/OR PROFILE BY THE CITY OF RALEIGH PUBLIC UTILITIES DEPARTMENT PRIOR TO CONSTRUCTION.
5. CONTRACTOR SHALL MAINTAIN CONTINUOUS WATER & SEWER SERVICE TO EXISTING RESIDENCES & BUSINESSES THROUGHOUT CONSTRUCTION OF PROJECT. ANY NECESSARY SERVICE INTERRUPTIONS SHALL BE PRECEDED BY A 24-HOUR ADVANCE NOTICE TO THE CITY OF RALEIGH PUBLIC UTILITIES DEPARTMENT.
6. 3.0' MINIMUM COVER IS REQUIRED ON ALL WATER MAINS & SEWER FORCE MAINS.
7. IT IS THE DEVELOPER'S RESPONSIBILITY TO ABANDON OR REMOVE EXISTING WATER & SEWER SERVICES NOT BEING USED IN REDEVELOPMENT OF A SITE UNLESS OTHERWISE DIRECTED BY THE CITY OF RALEIGH PUBLIC UTILITIES DEPARTMENT. THIS INCLUDES ABANDONING TAP AT MAIN & REMOVAL OF SERVICE FROM ROW OR EASEMENT PER CORPUD HANDBOOK PROCEDURE.
8. INSTALL 1" TYPE "K" COPPER WATER SERVICES WITH METERS LOCATED AT ROW OR WITHIN A 2'X2' WATERLINE EASEMENT IMMEDIATELY ADJACENT.
9. INSTALL 4" SCHEDULE 40 PVC SEWER SERVICES @ 1.0% MINIMUM GRADE WITH CLEANOUTS LOCATED AT ROW OR EASEMENT LINE & SPACED EVERY 75 LINEAR FEET MAXIMUM.
10. PRESSURE REDUCING VALVES ARE REQUIRED ON ALL WATER SERVICES EXCEEDING 80 PSI. BACKWATER VALVES ARE REQUIRED ON ALL SANITARY SEWER SERVICES HAVING BUILDING DRAINS LOWER THAN 1.0' ABOVE THE NEXT UPSTREAM MANHOLE.
11. ALL ENVIRONMENTAL PERMITS APPLICABLE TO THE PROJECT MUST BE OBTAINED FROM NCDWQ, USACE AND/OR FEMA FOR ANY RIPARIAN BUFFER, WETLAND &/OR FLOODPLAIN IMPACTS (RESPECTIVELY) PRIOR TO CONSTRUCTION.
12. NCDOT / RAILROAD ENCROACHMENT AGREEMENTS ARE REQUIRED FOR ANY UTILITY WORK (INCLUDING MAIN EXTENSIONS & SERVICE TAPS) WITHIN STATE OR RAILROAD ROW PRIOR TO CONSTRUCTION.
13. CROSS-CONNECTION CONTROL PROTECTION DEVICES ARE REQUIRED BASED ON DEGREE OF HEALTH HAZARD INVOLVED AS LISTED IN APPENDIX-B OF THE RULES GOVERNING PUBLIC WATER SYSTEMS IN NORTH CAROLINA. THESE GUIDELINES ARE THE MINIMUM REQUIREMENTS. THE DEVICES SHALL MEET AMERICAN SOCIETY OF SANITARY ENGINEERING (ASSE) STANDARDS OR BE ON THE UNIVERSITY OF SOUTHERN CALIFORNIA APPROVAL LIST. THE DEVICES SHALL BE INSTALLED AND TESTED (BOTH INITIAL AND PERIODIC TESTING THEREAFTER) IN ACCORDANCE WITH THE MANUFACTURER'S RECOMMENDATIONS OR THE LOCAL CROSS-CONNECTION CONTROL PROGRAM, WHICHEVER IS MORE STRINGENT. CONTACT JOANIE HARTLEY AT (919) 996-5923 OR JOANIE.HARTLEY@RALEIGHNC.GOV FOR MORE INFORMATION.

THIS DRAWING PREPARED AT THE
MAIN OFFICE
5410 Trinity Road, Suite 102 | Raleigh, NC 27607
TEL 919.866.4951 FAX 919.833.8124 www.timmons.com

YOUR VISION ACHIEVED THROUGH OURS.

REVISION DESCRIPTION	DATE

DATE	02/04/2020
DRAWN BY	331
DESIGNED BY	331
CHECKED BY	JFC
SCALE	1" = 50'

TIMMONS GROUP

NORTH CAROLINA LICENSE NO. C-1652

REGENCY AT HERITAGE - PHASE 3

ROLESVILLE - WAKE COUNTY - NORTH CAROLINA

UTILITY PLAN

JOB NO.	40013
SHEET NO.	C3.1

These plans and associated documents are the exclusive property of TIMMONS GROUP and may not be reproduced in whole or in part and shall not be used for any purpose whatsoever, inclusive, but not limited to construction, bidding, and/or construction staking without a written consent of TIMMONS GROUP.

S:\331\40013-Regency_at_Heritage_Revision\DWG\Sheet\CD\ROLESVILLE CD\40013-RL-C3.0-UTILITY PLAN.dwg | Plotted by Sean Hein

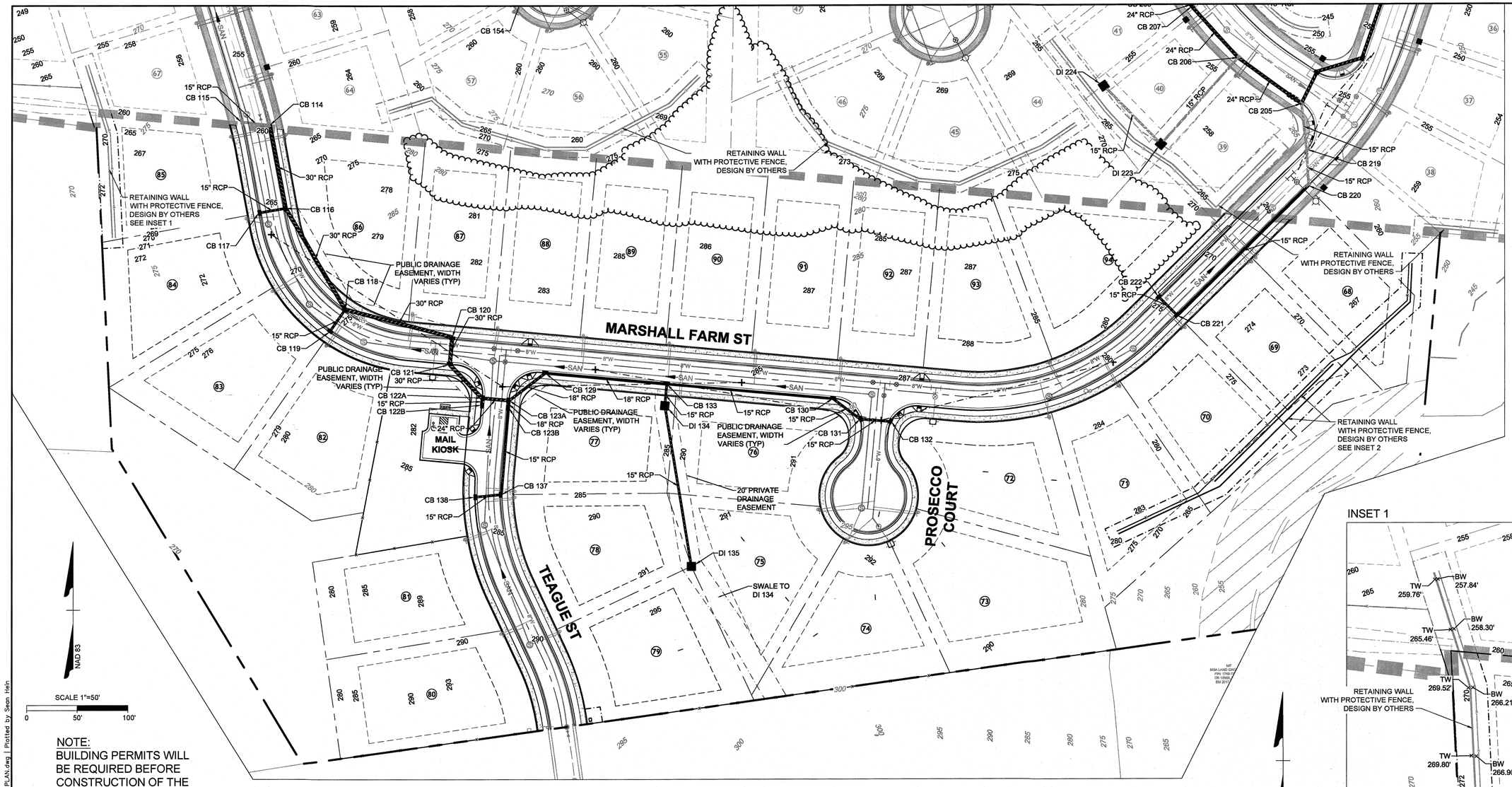

NOTE:
BUILDING PERMITS WILL BE REQUIRED BEFORE CONSTRUCTION OF THE RETAINING WALLS.

SEE SHEET C4.1 FOR STORM SEWER SCHEDULE

SWALE																
LENGTH	DA	L(10)	C	C(10)	N-VALUE	UPPER ELEV	LOWER ELEV	AVERAGE SLOPE	VELOCITY	SHEAR	DEPTH	PROTECTION	X-SECT AREA	WET-PER	HYD RADIUS	BOTTOM WIDTH
300	1.02	7.19	0.60	4.4	0.022	295.0	283.0	4.00%	27.38	7.49	3.00	NAG C125	30.00	10.40	2.88	0

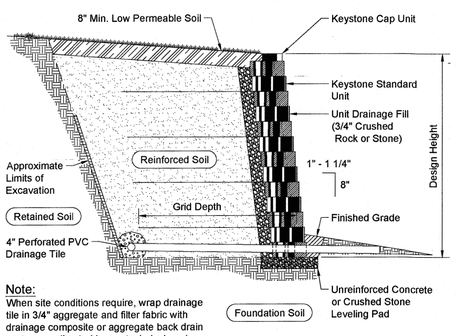

Note:
When site conditions require, wrap drainage tile in 3/4" aggregate and filter fabric with drainage composite or aggregate back drain system, as directed by geotechnical engineer.

Typical Reinforced Wall Section

RETAINING WALLS TO BE DESIGNED BY OTHERS

GENERAL NOTES

- All storm drainage systems within the jurisdiction of the Town of Wake Forest shall meet all the requirements of the Town of Wake Forest Manual of Specifications, Standards and Design, latest revision. The following shall be considered to be the minimum standards of design for storm drainage systems within the jurisdiction of the Town of Wake Forest.
- All storm drainage pipes shall be reinforced concrete class III minimum B or C Wall.
- All storm sewer manhole rings and covers shall be sanitary sewer standard, except that they shall be stamped "storm sewer."
- Design Storm Frequencies for conveyance systems within this development:
  - Local Roadways — 10 Year Storm
  - Bridges / Box Culverts — 100 Year Storm
  - Curb and Gutter and Inlets — 2 Year, 5 min TC
- Precast catch basins with weep holes shall generally be required. See Town of Wake Forest standard Details 9.50 through 9.51 as applicable.
- Flared end sections will be permitted on pipe as follows:
  On single pipe systems up to a 42" diameter
  On twin pipe systems up to 18" diameter.
  Otherwise, head walls will be used for all larger pipe systems and for all other multi-barrel pipe systems.
- For Head/End wall construction details, refer to the NCDOT Highway Design Branch Roadway Standard Drawings, latest revision. Standard Drawings are to be used in conjunction with the NCDOT Standard Specifications
- No storm water drainage shall be discharged into a sanitary sewer.

INSET 1

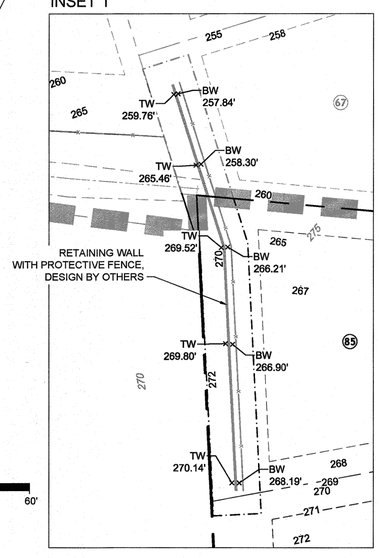

INSET 2

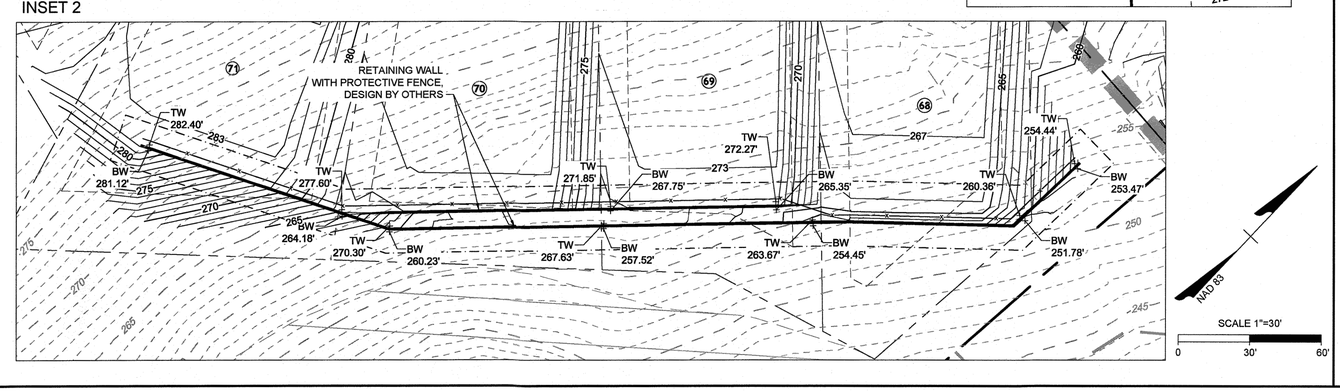

THIS DRAWING PREPARED AT THE RALEIGH OFFICE
5410 Trinity Road, Suite 102 | Raleigh, NC 27607
TEL 919.866.4951 FAX 919.833.8124 www.timmons.com

YOUR VISION ACHIEVED THROUGH OURS.

REVISION DESCRIPTION

DATE
02/04/2020

DRAWN BY 331
DESIGNED BY 331
CHECKED BY JFC
SCALE 1" = 50'

TIMMONS GROUP

NORTH CAROLINA LICENSE NO. C-1652

REGENCY AT HERITAGE - PHASE 3

ROLESVILLE - WAKE COUNTY - NORTH CAROLINA

GRADING & DRAINAGE PLAN

JOB NO. 40013
SHEET NO. C4.0

These plans and associated documents are the exclusive property of TIMMONS GROUP and may not be reproduced in whole or in part and shall not be used for any purpose whatsoever inclusive, but not limited to construction, bidding, and/or construction staking without the express written consent of TIMMONS GROUP.

S:\331\40013-Regency at Heritage_Revision\DWG\Sheet\CD\ROLESVILLE CD\40013-RL-C4.0-GRADING & DRAINAGE PLAN.dwg | Plotted by: Sean Hein

STORM DRAINAGE TABLE (STORM 100)

STRUCTURE UP	HEIGHT	TOP	INV IN	INV OUT	OUTLET PIPE	STRUCTURE DOWN
CB 116	8.31'	265.81	257.50' (30" RCP) CB 118 258.75' (15" RCP) CB 117	257.50' (30" RCP)	84' @ 5.99%	CB 114
CB 117	6.74'	265.79		259.05' (15" RCP)	27' @ 1.11%	CB 116
CB 118	8.30'	274.80	266.50' (30" RCP) CB 120 267.75' (15" RCP) CB 119	266.50' (30" RCP)	116' @ 7.79%	CB 116
CB 119	6.75'	274.80		268.05' (15" RCP)	27' @ 1.11%	CB 118
CB 120	7.41'	280.51	273.10' (30" RCP) CB 121	273.10' (30" RCP)	109' @ 6.04%	CB 118
CB 121	7.21'	280.51	273.30' (30" RCP) CB 122A	273.30' (30" RCP)	27' @ 0.74%	CB 120
CB 122A	6.98'	280.97	274.50' (24" RCP) CB 123A 274.85' (15" RCP) CB 122B	273.99' (30" RCP)	46' @ 1.50%	CB 121
CB 122B	6.11'	281.00		274.89' (15" RCP)	7' @ 0.57%	CB 122A
CB 123A	6.07'	280.97	275.30' (18" RCP) CB 129 275.33' (18" RCP) CB 123B	274.90' (24" RCP)	27' @ 1.48%	CB 122A
CB 123B	5.60'	281.00	275.65' (15" RCP) CB 137	275.40' (18" RCP)	7' @ 0.99%	CB 123A
CB 129	6.33'	282.23	275.90' (18" RCP) CB 133	275.90' (18" RCP)	45' @ 1.35%	CB 123A

STORM DRAINAGE TABLE (STORM 100)

STRUCTURE UP	HEIGHT	TOP	INV IN	INV OUT	OUTLET PIPE	STRUCTURE DOWN
CB 130	5.76'	286.51	280.75' (15" RCP) CB 131	280.75' (15" RCP)	165' @ 1.70%	CB 133
CB 131	5.50'	286.75	281.25' (15" RCP) CB 132	281.25' (15" RCP)	33' @ 1.50%	CB 130
CB 132	5.47'	286.92		281.45' (15" RCP)	31' @ 0.64%	CB 131
CB 133	6.33'	284.03	277.95' (15" RCP) CB 130 277.95' (15" RCP) DI 134	277.70' (18" RCP)	120' @ 1.50%	CB 129
CB 137	6.69'	283.69	277.75' (15" RCP) CB 138	277.00' (15" RCP)	86' @ 1.57%	CB 123B
CB 138	5.52'	283.39		277.88' (15" RCP)	27' @ 0.49%	CB 137
DI 134	4.26'	282.41	278.15' (15" RCP) DI 135	278.15' (15" RCP)	21' @ 0.93%	CB 133
DI 135	4.50'	290.44		285.94' (15" RCP)	161' @ 4.85%	DI 134

STORM PIPE TABLE

PIPE #	DIA	FROM - TO	UPSTREAM INVERT	DOWNSTREAM INVERT	SLOPE	LENGTH	DESCRIPTION
116-114	30"	CB 116 - CB 114	257.50	252.50	5.99%	83.51 LF	NCDOT Circular Pipe
117-116	15"	CB 117 - CB 116	259.05	258.75	1.11%	27.00 LF	NCDOT Circular Pipe
118-116	30"	CB 118 - CB 116	266.50	257.50	7.79%	115.53 LF	NCDOT Circular Pipe
119-118	15"	CB 119 - CB 118	268.05	267.75	1.11%	27.00 LF	NCDOT Circular Pipe
120-118	30"	CB 120 - CB 118	273.10	266.50	6.04%	109.32 LF	NCDOT Circular Pipe
121-120	30"	CB 121 - CB 120	273.30	273.10	0.74%	27.00 LF	NCDOT Circular Pipe
122B-122A	15"	CB 122B - CB 122A	274.89	274.85	0.57%	7.04 LF	NCDOT Circular Pipe
122-121	30"	CB 122A - CB 121	273.99	273.30	1.50%	45.94 LF	NCDOT Circular Pipe
123B-123A	18"	CB 123B - CB 123A	275.40	275.33	0.99%	7.05 LF	NCDOT Circular Pipe
123A-122	24"	CB 123A - CB 122A	274.90	274.50	1.48%	27.00 LF	NCDOT Circular Pipe
129-123A	18"	CB 129 - CB 123A	275.90	275.30	1.35%	44.56 LF	NCDOT Circular Pipe

STORM PIPE TABLE

130-133	15"	CB 130 - CB 133	280.75	277.95	1.70%	164.74 LF	NCDOT Circular Pipe
131-130	15"	CB 131 - CB 130	281.25	280.75	1.50%	33.43 LF	NCDOT Circular Pipe
132-131	15"	CB 132 - CB 131	281.45	281.25	0.64%	31.03 LF	NCDOT Circular Pipe
133-129	18"	CB 133 - CB 129	277.70	275.90	1.50%	120.35 LF	NCDOT Circular Pipe
134-133	15"	DI 134 - CB 133	278.15	277.95	0.93%	21.50 LF	NCDOT Circular Pipe
137-123B	15"	CB 137 - CB 123B	277.00	275.65	1.57%	86.02 LF	NCDOT Circular Pipe
138-137	15"	CB 138 - CB 137	277.88	277.75	0.49%	26.61 LF	NCDOT Circular Pipe

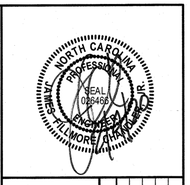

THIS DRAWING PREPARED AT THE
RALEIGH OFFICE
5410 Trinity Road, Suite 102 | Raleigh, NC 27607
TEL 519.866.4951 FAX 919.833.8124 www.timmons.com

YOUR VISION ACHIEVED THROUGH OURS.

REVISION DESCRIPTION	DATE

DATE: 02/04/2020
DRAWN BY: 331
DESIGNED BY: 331
CHECKED BY: JFC
SCALE: N/A

TIMMONS GROUP
NORTH CAROLINA LICENSE NO. C-1652

REGENCY AT HERITAGE - PHASE 3

ROLESVILLE - WAKE COUNTY - NORTH CAROLINA

STORM SEWER SCHEDULE

JOB NO. 40013
SHEET NO. C4.1

These plans and associated documents are the exclusive property of TIMMONS GROUP and may not be reproduced in whole or in part and shall not be used for any purpose whatsoever, inclusive, but not limited to construction, bidding, and/or construction staking without the express written consent of TIMMONS GROUP.

S:\331\40013-Regency_at_Heritage_Revision\DWG\Sheet\02\ROLESVILLE (2)\40013-RL-C4.0-GRADING & DRAINAGE PLAN.dwg | Plotted by Sean Hein

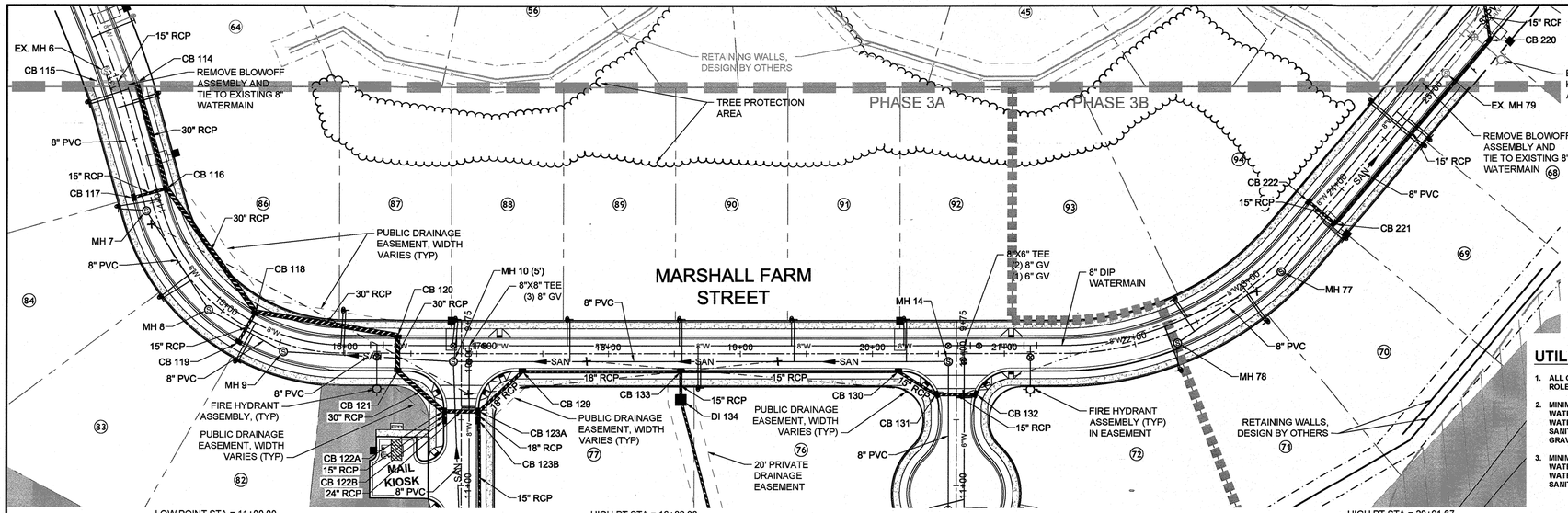

LOW POINT STA = 11+00.00
LOW POINT ELEV = 249.23
PVI STA = 12+00
PVI ELEV = 252.23
A.D. = 3.95%
K = 50.69

HIGH PT STA = 16+82.30
HIGH POINT ELEV = 281.24
PVI STA = 15+99.80
PVI ELEV = 280.00
A.D. = -5.44%
K = 30.32

HIGH PT STA = 20+91.67
HIGH POINT ELEV = 287.05
PVI STA = 21+73.75
PVI ELEV = 288.62
A.D. = -8.44%
K = 30.22

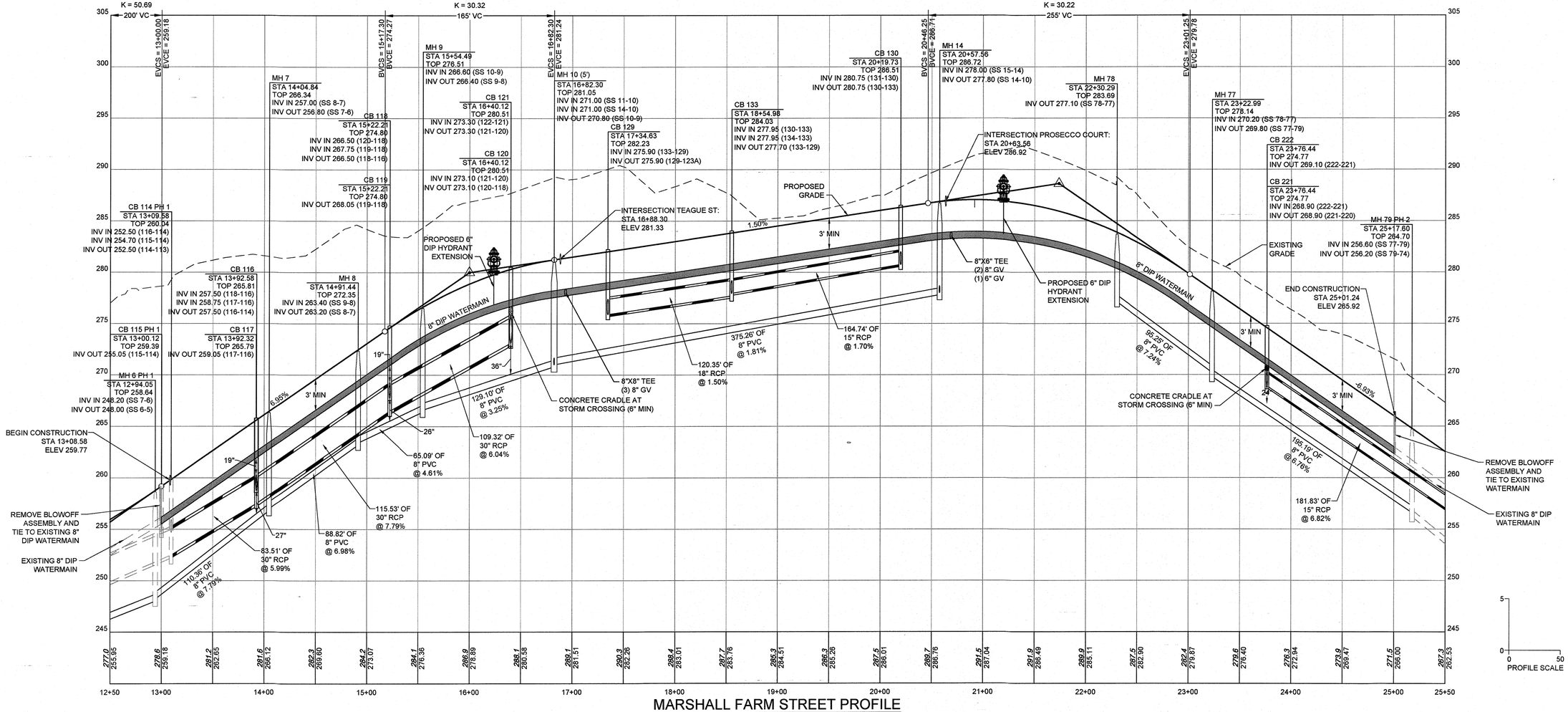

MARSHALL FARM STREET PROFILE

HORIZ SCALE: 1"=50'
VERT SCALE: 1"=5

ATTENTION CONTRACTORS

The ***Construction Contractor*** responsible for the extension of water, sewer, and/or reuse, as approved in these plans, is responsible for ***contacting*** the ***Public Utilities Department*** at *(919) 996-4540* at least *twenty four hours* prior to beginning any of their construction.

Failure to notify both ***City Departments*** in advance of beginning construction, will result in the issuance of ***monetary fines***, and require reinstallation of any water or sewer facilities not inspected as a result of this notification failure.

Failure to call for ***Inspection***, ***Install a Downstream Plug***, have ***Permitted Plans*** on the ***Jobsite***, or any other ***Violation*** of ***City of Raleigh Standards*** will result in a ***Fine and Possible Exclusion*** from future work in the ***City of Raleigh***.

PUBLIC
WATER DISTRIBUTION/EXTENTION SYTEM
THE CITY OF RALEIGH CONSENTS TO THE CONNECTION AND EXTENSION OF THE CITY'S PUBLIC WATER SYSTEM AS SHOWN ON THIS PLAN. THE MATERIAL AND CONSTRUCTION METHODS USED FOR THIS PROJECT SHALL CONFORM TO THE STANDARDS AND SPECIFICATIONS OF THE CITY'S PUBLIC UTILITIES HANDBOOK.

CITY OF RALEIGH
PUBLIC UTILITIES DEPARTMENT PERMIT # W-3672
AUTHORIZATION TO CONSTRUCT
DATE 2/19/20

PUBLIC
SEWER COLLECTION / EXTENTION SYTEM
THE CITY OF RALEIGH CONSENTS TO THE CONNECTION AND EXTENSION OF THE CITY'S PUBLIC SEWER SYSTEM AS SHOWN ON THIS PLAN. THE MATERIAL AND CONSTRUCTION METHODS USED FOR THIS PROJECT SHALL CONFORM TO THE STANDARDS AND SPECIFICATIONS OF THE CITY'S PUBLIC UTILITIES HANDBOOK.

CITY OF RALEIGH
PUBLIC UTILITIES DEPARTMENT PERMIT # S-4605
AUTHORIZATION TO CONSTRUCT
DATE 2/19/20

UTILITY NOTES:

1. **ALL CONSTRUCTION SHALL BE IN ACCORDANCE WITH ROLESVILLE STANDARDS AND SPECIFICATIONS.**
2. **MINIMUM UTILITY HORIZONTAL SEPARATION DISTANCES:**
   WATER AND SANITARY SEWER MAINS - 10 FT.
   WATER AND STORM SEWER MAINS - 5 FT.
   SANITARY SEWER AND STORM SEWER MAINS - 10 FT.
   GRAVITY SANITARY SEWER AND FORCE MAINS - 5 FT.
3. **MINIMUM UTILITY VERTICAL SEPARATION DISTANCES:**
   WATER AND SANITARY SEWER MAINS - 18 IN.
   WATER AND STORM SEWER MAINS - 18 IN.
   SANITARY SEWER AND STORM SEWER MAINS - 24 IN.

NORTH CAROLINA PROFESSIONAL SEAL 026465 ENGINEER JAMES A. FILLMORE, III

THIS DRAWING PREPARED AT THE
RALEIGH OFFICE
5410 Trinity Road, Suite 102 | Raleigh, NC 27607
TEL 919.866.4951 FAX 919.833.8124 www.timmons.com

YOUR VISION ACHIEVED THROUGH OURS.

DATE	REVISION DESCRIPTION

DATE	02/04/2020
DRAWN BY	331
DESIGNED BY	331
CHECKED BY	JFC
SCALE	H: 1"=50' V: 1"=5'

TIMMONS GROUP

NORTH CAROLINA LICENSE NO. C-1652

REGENCY AT HERITAGE - PHASE 3

ROLESVILLE - WAKE COUNTY - NORTH CAROLINA

MARSHALL FARM ST PLAN & PROFILE

JOB NO.	40013
SHEET NO.	C5.1

These plans and associated documents are the exclusive property of TIMMONS GROUP and may not be reproduced in whole or in part and shall not be used for any purpose whatsoever, inclusive, but not limited to construction, bidding, and/or construction staking without the express written consent of TIMMONS GROUP.

S:\331\40013-Regency_at_Heritage_Revision\DWG\Sheet\CD\ROLESVILLE CD\40013-RL-C5.1-PROF.dwg | Plotted by Sean Hein

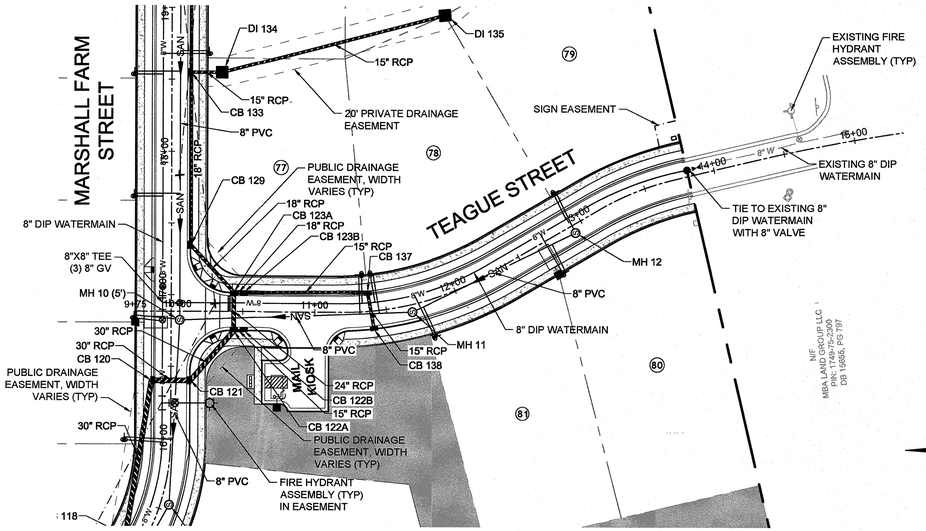

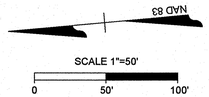

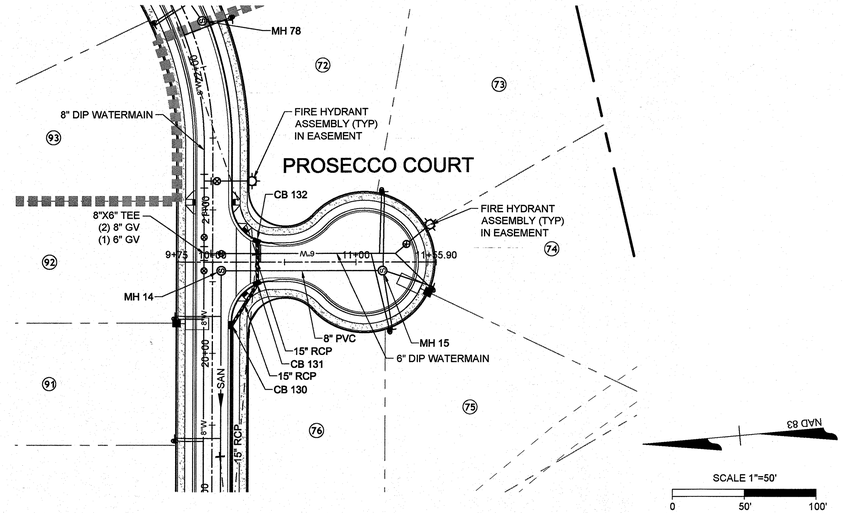

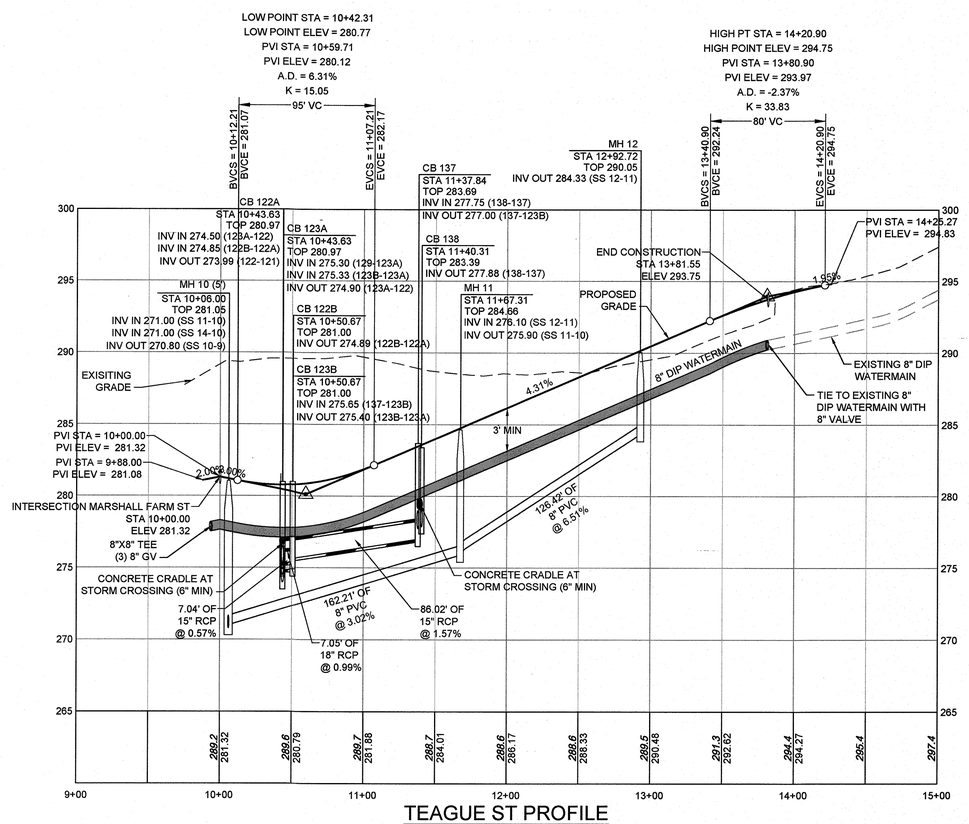

TEAGUE ST PROFILE

HORIZ SCALE: 1"=50'
VERT SCALE: 1"=5

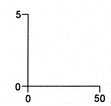

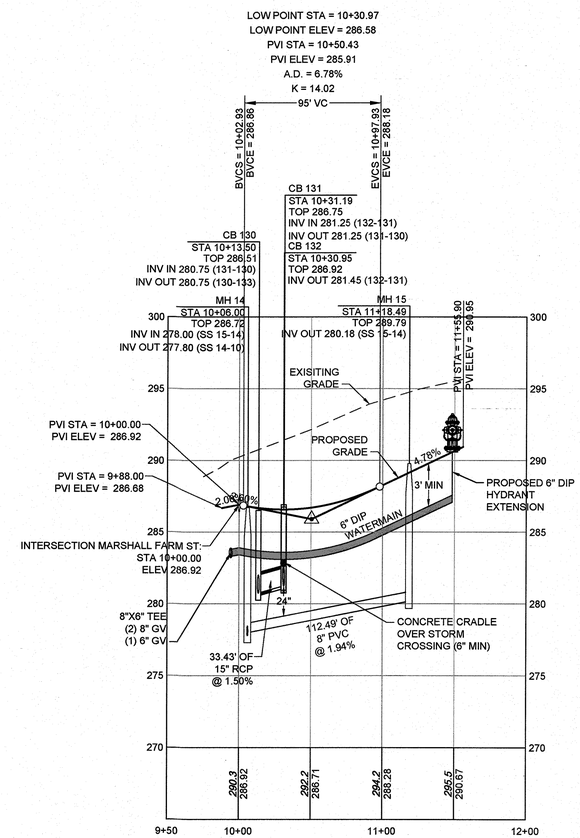

PROSECCO COURT PROFILE

HORIZ SCALE: 1"=50'
VERT SCALE: 1"=5

UTILITY NOTES:

1. ALL CONSTRUCTION SHALL BE IN ACCORDANCE WITH ROLESVILLE STANDARDS AND SPECIFICATIONS.
2. MINIMUM UTILITY HORIZONTAL SEPARATION DISTANCES:
   WATER AND SANITARY SEWER MAINS - 10 FT.
   WATER AND STORM SEWER MAINS - 5 FT.
   SANITARY SEWER AND STORM SEWER MAINS - 10 FT.
   GRAVITY SANITARY SEWER AND FORCE MAINS - 5 FT.
3. MINIMUM UTILITY VERTICAL SEPARATION DISTANCES:
   WATER AND SANITARY SEWER MAINS - 18 IN.
   WATER AND STORM SEWER MAINS - 18 IN.
   SANITARY SEWER AND STORM SEWER MAINS - 24 IN.

ATTENTION CONTRACTORS

The ***Construction Contractor*** responsible for the extension of water, sewer, and/or reuse, as approved in these plans, is responsible for ***contacting*** the ***Public Utilities Department*** at ***(919) 996-4540*** at least ***twenty four hours*** prior to beginning any of their construction.

Failure to notify both ***City Departments*** in advance of beginning construction, will result in the issuance of ***monetary fines***, and require reinstallation of any water or sewer facilities not inspected as a result of this notification failure.

Failure to call for ***Inspection***, ***Install a Downstream Plug***, have ***Permitted Plans*** on the ***Jobsite***, or any other ***Violation*** of ***City of Raleigh Standards*** will result in a ***Fine and Possible Exclusion*** from future work in the ***City of Raleigh***.

PUBLIC
WATER DISTRIBUTIONEXTENTION SYTEM
THE CITY OF RALEIGH CONSENTS TO THE CONNECTION AND EXTENSION OF THE CITY'S PUBLIC WATER SYSTEM AS SHOWN ON THIS PLAN. THE MATERIAL AND CONSTRUCTION METHODS USED FOR THIS PROJECT SHALL CONFORM TO THE STANDARDS AND SPECIFICATIONS OF THE CITY'S PUBLIC UTILITIES HANDBOOK.

CITY OF RALEIGH
PUBLIC UTILITIES DEPARTMENT PERMIT # W-3672
AUTHORIZATION TO CONSTRUCT Jim Beach
DATE 2/19/20

PUBLIC
SEWER COLLECTION / EXTENTION SYTEM
THE CITY OF RALEIGH CONSENTS TO THE CONNECTION AND EXTENSION OF THE CITY'S PUBLIC SEWER SYSTEM AS SHOWN ON THIS PLAN. THE MATERIAL AND CONSTRUCTION METHODS USED FOR THIS PROJECT SHALL CONFORM TO THE STANDARDS AND SPECIFICATIONS OF THE CITY'S PUBLIC UTILITIES HANDBOOK.

CITY OF RALEIGH
PUBLIC UTILITIES DEPARTMENT PERMIT # S-4605
AUTHORIZATION TO CONSTRUCT Jim Beach
DATE 2/19/20

THIS DRAWING PREPARED AT THE
RALEIGH OFFICE
5410 Trinity Road, Suite 102 | Raleigh, NC 27607
TEL 919.866.4951 FAX 919.833.8124 www.timmons.com

YOUR VISION ACHIEVED THROUGH OURS.

REVISION DESCRIPTION	DATE

DATE	02/04/2020
DRAWN BY	331
DESIGNED BY	331
CHECKED BY	JFC
SCALE	H: 1"=50' V: 1"=5'

TIMMONS GROUP

NORTH CAROLINA LICENSE NO. C-1652

REGENCY AT HERITAGE - PHASE 3

ROLESVILLE - WAKE COUNTY - NORTH CAROLINA

TEAGUE ST & PROSECCO COURT PLAN & PROFILE

JOB NO. 40013

SHEET NO. C5.2

These plans and associated documents are the exclusive property of TIMMONS GROUP and may not be reproduced in whole or in part and shall not be used for any purpose whatsoever, inclusive, but not limited to construction, bidding, and/or construction staking without the express written consent of TIMMONS GROUP.

S:\331\40013-Regency_at_Heritage_Revision\DWG\Sheet\CD\ROLESVILLE CD\40013-RL-C6.2-PROF.dwg | Plotted by Sean Hein

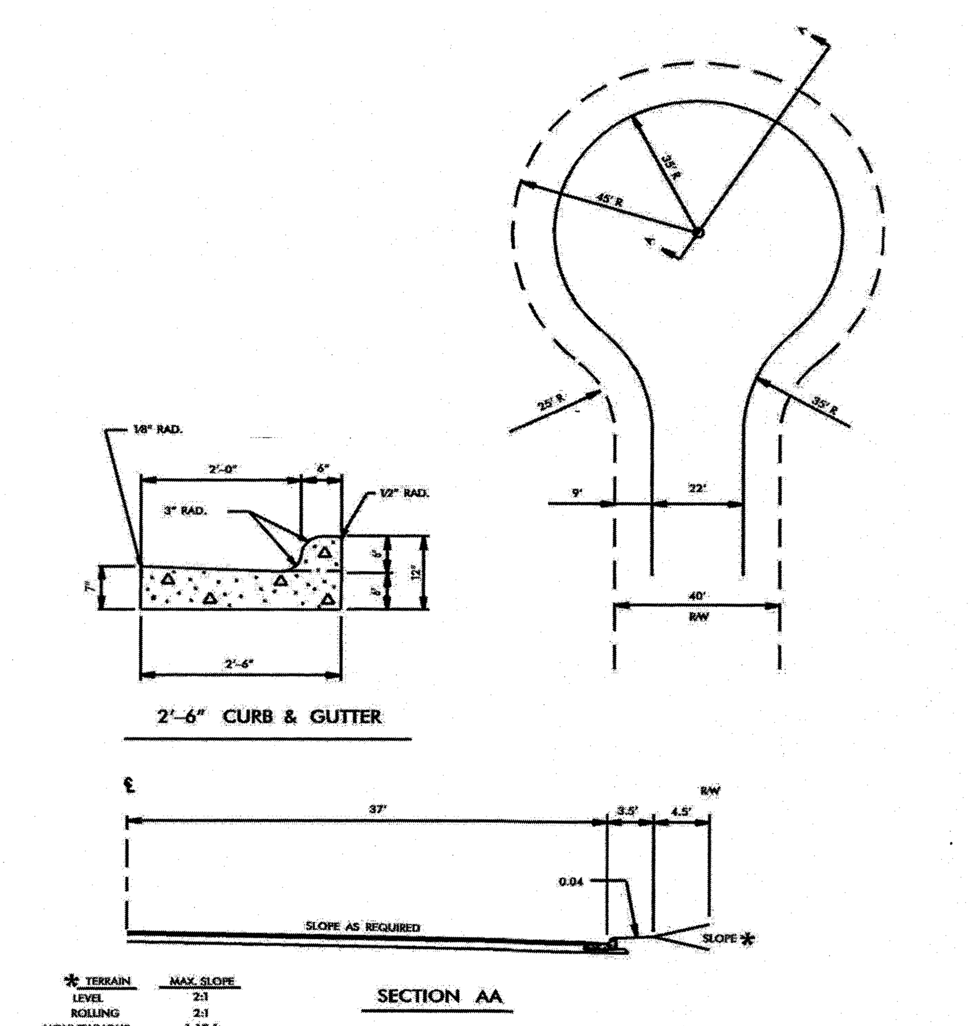

* TERRAIN	MAX. SLOPE
LEVEL	2:1
ROLLING	2:1
MOUNTAINOUS	1-1/2:1

FIGURE 7
SYMMETRICAL CUL-DE-SAC WITH CURB & GUTTER

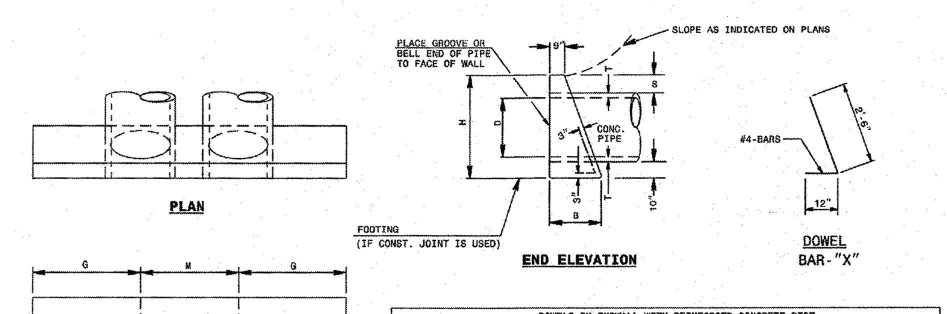

DOWELS IN ENDWALL WITH REINFORCED CONCRETE PIPE

LOC.	PIPE DIA.	SINGLE PIPE 15"	18"	24"	30"	36"	42"		48"		DOUBLE PIPE 15"	18"	24"	30"	36"	42"		48"	
	BARS	"X"	"X"	"X"	"X"	"X"	"X"	Y*	"X"	Y*	"X"	"X"	"X"	"X"	"X"	"X"	Y*	"X"	Y*
G	QTY.	2	2	3	3	4	4	2	5	2	2	2	3	3	4	4	2	5	2
M	QTY.	-	-	-	-	-	-		-		1	1	2	2	2	2		3	
G	QTY.	2	2	3	3	4	4		5		2	2	3	3	4	4		5	
TOTAL LBS.		9	9	14	14	19	55		65		12	12	19	19	23	77		92	

DIMENSIONS AND CONCRETE QUANTITIES
USING CONCRETE PIPE

	COMMON DIMENSIONS					SINGLE PIPE		DOUBLE PIPE		
D	H	B	G	T	S	L	YD³	M	L	YD³
15"	3'-3"	1'-8"	2'-9"	2¼"	9½"	5'-6"	0.7	2'-2"	7'-8"	1.0
18"	3'-7"	1'-10"	3'-2"	2½"	10"	6'-4"	1.0	2'-7"	8'-11"	1.3
24"	4'-2"	2'-1"	4'-0"	3"	10"	8'-0"	1.5	3'-5"	11'-5"	2.0
30"	5'-0"	2'-6"	4'-7"	4¼"	11½"	9'-2"	2.3	4'-3"	13'-5"	3.1
36"	5'-8"	2'-8"	5'-6"	4¾"	11½"	11'-0"	3.4	5'-0"	16'-0"	4.5
42"	6'-2"	3'-1"	6'-4"	5¼"	11½"	12'-8"	4.5	5'-10"	18'-6"	6.0
48"	6'-9"	3'-5"	7'-2"	5¾"	11½"	14'-4"	6.0	6'-8"	21'-0"	8.0

*SEE SHEET 3

1-18 STATE OF NORTH CAROLINA DEPT. OF TRANSPORTATION DIVISION OF HIGHWAYS RALEIGH, N.C.

ROADWAY STANDARD DRAWING FOR **CONCRETE ENDWALL FOR SINGLE AND DOUBLE PIPE CULVERTS** 15" THRU 48" PIPE - 90° SKEW

SHEET 1 OF 3 **838.01**

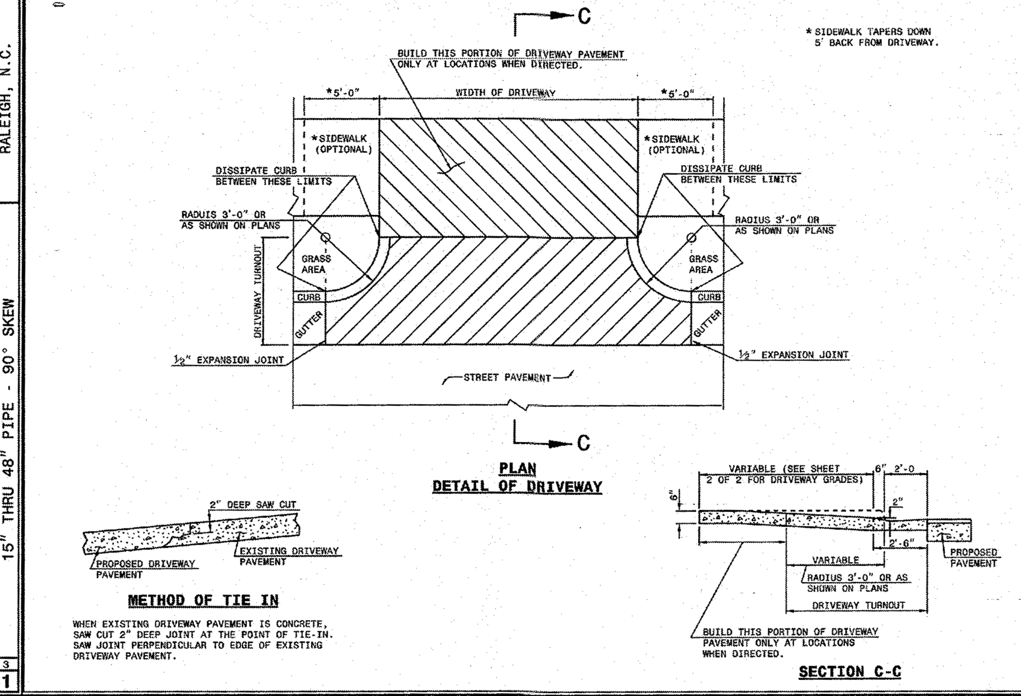

WHEN EXISTING DRIVEWAY PAVEMENT IS CONCRETE, SAW CUT 2" DEEP JOINT AT THE POINT OF TIE-IN. SAW JOINT PERPENDICULAR TO EDGE OF EXISTING DRIVEWAY PAVEMENT.

1-18 STATE OF NORTH CAROLINA DEPT. OF TRANSPORTATION DIVISION OF HIGHWAYS RALEIGH, N.C.

ROADWAY STANDARD DRAWING FOR **DRIVEWAY TURNOUT** RADIUS TYPE

SHEET 1 OF 2 **848.02**

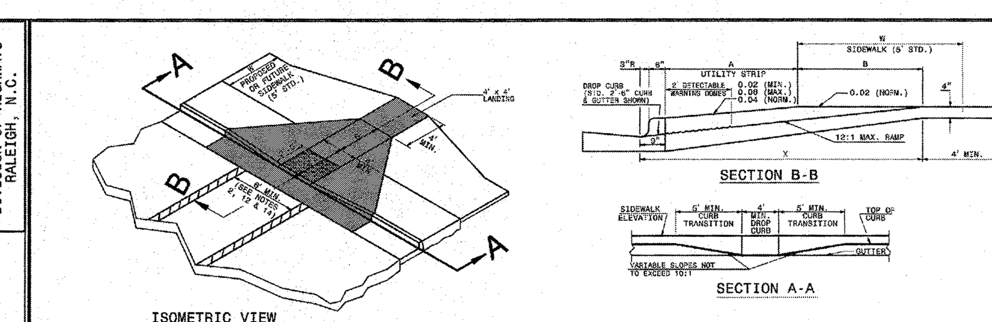

NOTES:
1. DETECTABLE WARNING DOMES WILL COVER 2'-0" LENGTH AND FULL WIDTH OF THE RAMP FLOOR AS SHOWN ON THE DETAILS.
2. DETECTABLE WARNING DOMES WILL CONTRAST VISIBILITY WITH ADJOINING SURFACE, EITHER LIGHT-ON-DARK, OR DARK-ON-LIGHT SEQUENCE COVERING THE ENTIRE RAMP.

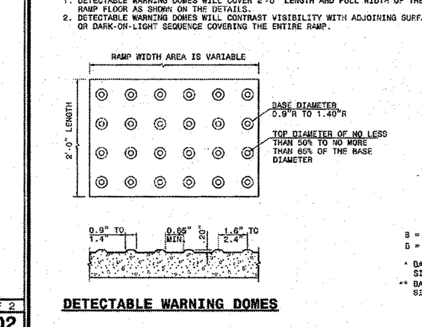

W	A	W+A+9"	X	B
5'	0.0'	5.8'	6.8'	5.0'*
6'	0.0'	6.8'	6.8'	6.0'**
7'	0.0'	7.8'	7.3'	6.5'**
8'	0.0'	8.8'	7.3'	6.5'**
5'	2.0'	7.8'	7.8'	6.0'
5'	2.5'	8.3'	8.1'	4.8'
5'	3.0'	8.8'	8.3'	4.4'
5'	3.5'	9.3'	8.4'	4.1'
5'	4.0'	9.8'	8.6'	3.8'
5'	4.5'	10.3'	8.7'	3.4'
5'	5.0'	10.8'	8.9'	3.1'

B = X-(A+9")
B = DISTANCE FROM FRONT EDGE OF SIDEWALK TO BACK POINT OF 12:1 (8.33%) SLOPE.
* BACK OF SIDEWALK DROP REQUIRED FOR ALL SIDEWALK SLOPES.
** BACK OF SIDEWALK DROP REQUIRED FOR SIDEWALK SLOPES 0.04.

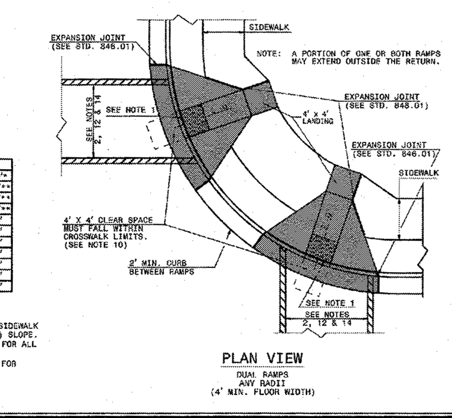

1-18 STATE OF NORTH CAROLINA DEPT. OF TRANSPORTATION DIVISION OF HIGHWAYS RALEIGH, N.C.

ROADWAY STANDARD DRAWING FOR **CURB RAMP** PROPOSED CURB AND GUTTER

SHEET 1 OF 3 **848.05**

GENERAL NOTES:

CHAMFER ALL CORNERS 1" OR HAVE A RADIUS OF 1".

PLACE 2 #6 "Y" BARS IN THE TOP OF ALL ENDWALL FOR PIPE CULVERTS 42" AND OVER WITH A MINIMUM OF 3" COVER AND A LENGTH OF 6" LESS THAN ENDWALL LENGTH.

CONSTRUCT BOTTOM SLAB WITH FORMS.

DO NOT INTERPRET WALL THICKNESS (T) SHOWN FOR THE THICKNESS ACCEPTABLE, BUT IS USED IN COMPUTING ENDWALL QUANTITIES.

WHEN THE CONTRACTOR ELECTS TO USE A CONSTRUCTION JOINT AT THE BOTTOM OF THE PIPE, PLACE BAR "X" DOWELS IN THE BASE AS SHOWN ON PLANS. SPACE BARS APPROXIMATELY ON 12" CENTERS UNLESS OTHERWISE DIRECTED BY THE ENGINEER.

WHEN THE CONTRACTOR ELECTS TO USE A CONSTRUCTION JOINT AT THE BOTTOM OF THE PIPE AND POUR THE BASE SEPARATELY LEAVE THE POUR ROUGH.

USE CLASS "B" CONCRETE.

1-18 STATE OF NORTH CAROLINA DEPT. OF TRANSPORTATION DIVISION OF HIGHWAYS RALEIGH, N.C.

ROADWAY STANDARD DRAWING FOR **CONCRETE ENDWALL FOR SINGLE AND DOUBLE PIPE CULVERTS** 15" THRU 48" PIPE - 90° SKEW

SHEET 3 OF 3 **838.01**

DESIRABLE DRIVEWAY GRADES

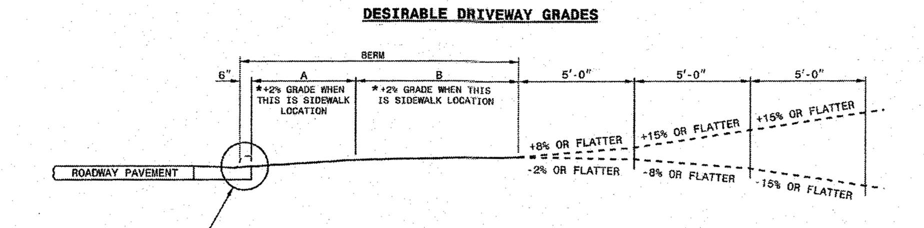

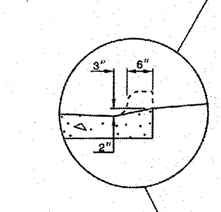

*SIDEWALK LOCATION (DO NOT PLACE SIDEWALK ON BERMS LESS THAN 6' WIDE.)

DESIRABLE OR MAXIMUM DRIVEWAY GRADES

BERM WIDTH	A DIST.	A GRADE	B DIST.	B GRADE
8' OR LESS	5'-0"	+2%*	2'-6"	+5%
8' OR LESS	2'-0"	+6%	5'-6"	+2%*
10'	4'-0"	+4%	5'-6"	+2%*
12' & OVER	4'-6"	+4%	7'-0"	+2%*

MAXIMUM DRIVEWAY GRADES

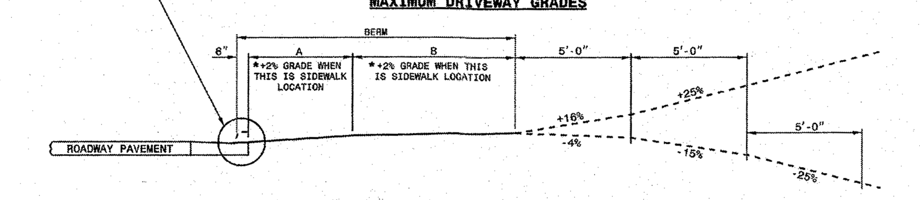

1-18 STATE OF NORTH CAROLINA DEPT. OF TRANSPORTATION DIVISION OF HIGHWAYS RALEIGH, N.C.

ROADWAY STANDARD DRAWING FOR **DRIVEWAY TURNOUT** DRIVEWAY GRADES

SHEET 2 OF 2 **848.02**

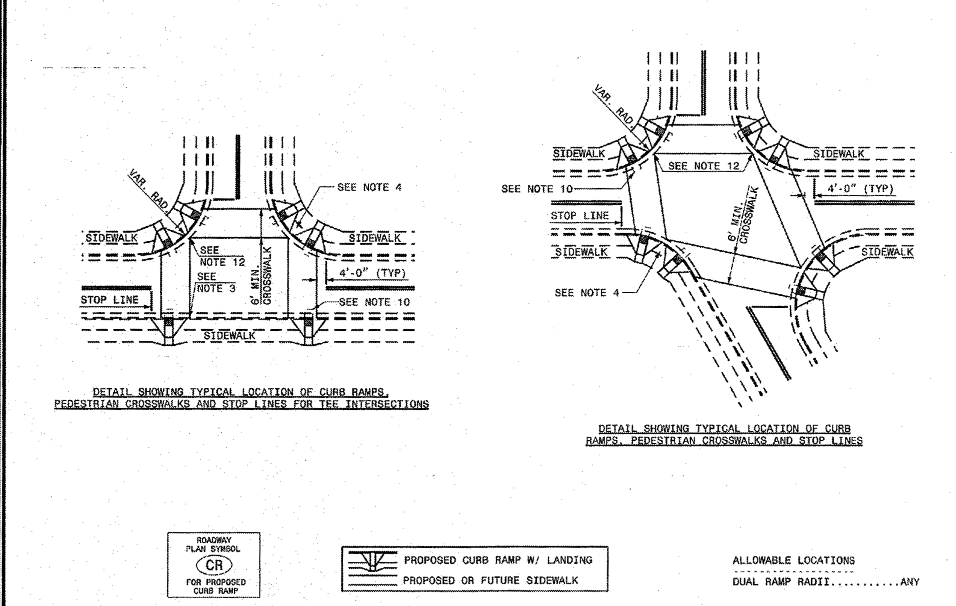

ALLOWABLE LOCATIONS
DUAL RAMP RADII..........ANY

1-18 STATE OF NORTH CAROLINA DEPT. OF TRANSPORTATION DIVISION OF HIGHWAYS RALEIGH, N.C.

ROADWAY STANDARD DRAWING FOR **CURB RAMP** PROPOSED CURB AND GUTTER

SHEET 2 OF 3 **848.05**

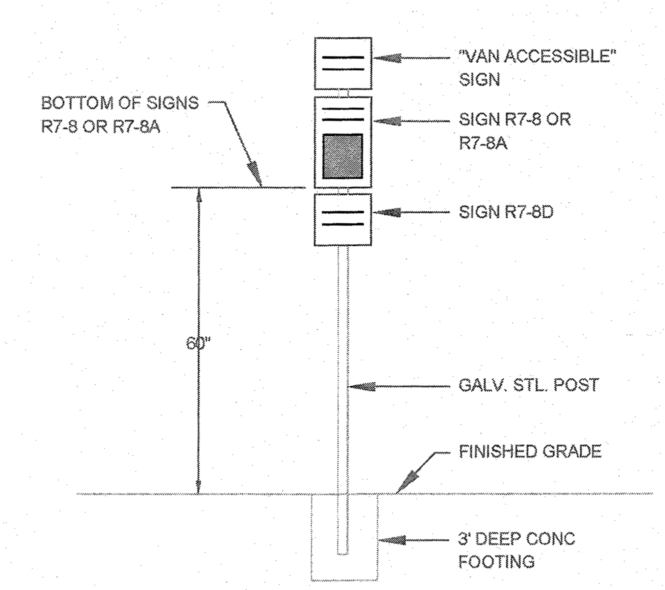

ALL SIGNS SHALL BE PROVIDED AND INSTALLED IN ACCORDANCE WITH LATEST MANUAL ON UNIFORM TRAFFIC CONTROL DEVICES, NCSBC AND ADA SPECIFICATIONS AND REQUIREMENTS.

R7-8D

R7-8A

NOTE: MAXIMUM PENALTY SHALL BE PER LATEST FINE AMOUNT AS SPECIFIED BY LOCAL AUTHORITIES.

VAN ACCESSIBLE

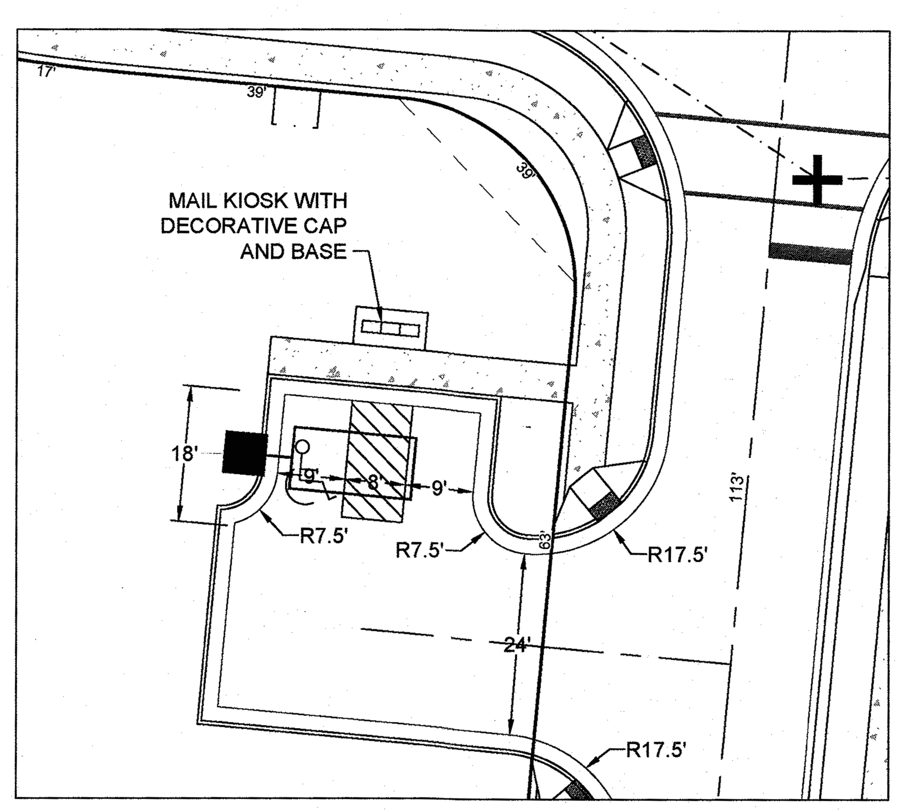

MAIL KIOSK DETAIL
1" = 20'

SOLID COVER SHOWN PERFORATED. PERFORATED AVAILABLE IF SPECIFIED.
STATE USE OF SYSTEM ON COVER (I.E.: SEWER, STORM DRAIN, ELECTRICAL)

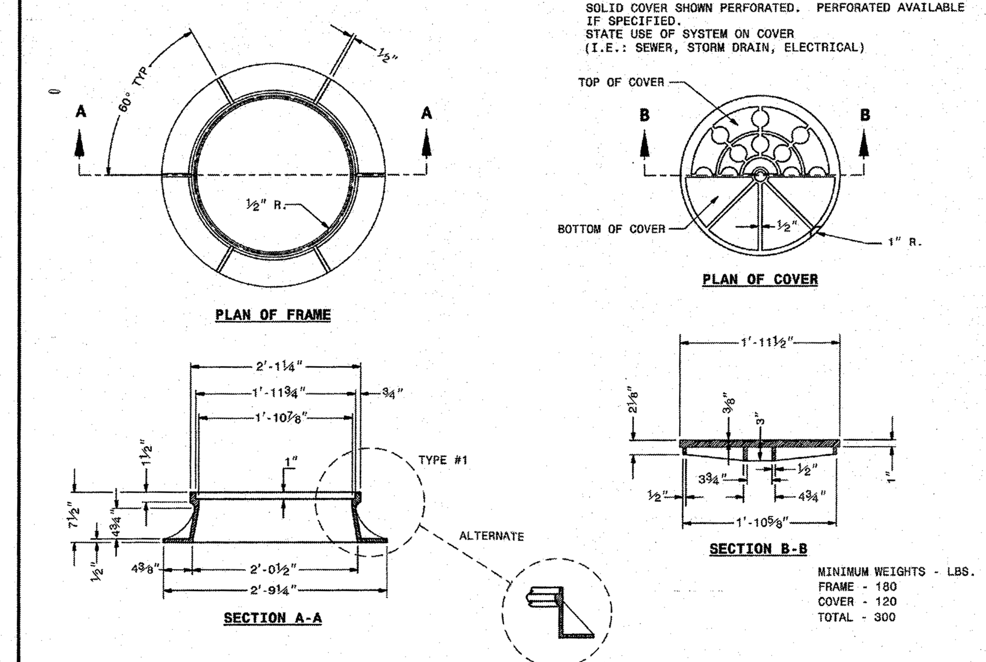

MINIMUM WEIGHTS - LBS.
FRAME - 180
COVER - 120
TOTAL - 300

1-18 STATE OF NORTH CAROLINA DEPT. OF TRANSPORTATION DIVISION OF HIGHWAYS RALEIGH, N.C.

ROADWAY STANDARD DRAWING FOR **MANHOLE FRAME AND COVER**

SHEET 1 OF 1 **840.54**

NOTES:
1. CONSTRUCT THE RAMP SURFACE TO BE STABLE, FIRM, AND SLIP RESISTANT. CONSTRUCT THE CURB RAMP TYPE AS SHOWN IN THE PAVEMENT MARKING PLANS OR AS DIRECTED BY THE ENGINEER.
2. LOCATE CURB RAMPS AND PLACE PEDESTRIAN CROSSWALK MARKINGS AS SHOWN IN THE PAVEMENT MARKING PLANS. WHEN FIELD ADJUSTMENTS REQUIRE MOVING CURB RAMPS OR MARKINGS AS SHOWN, CONTACT THE SIGNING AND DELINEATION UNIT OR LOCATE AS DIRECTED BY THE ENGINEER.
3. COORDINATE THE CURB RAMP AND THE PEDESTRIAN CROSSWALK MARKINGS SO A 4'x4' CLEAR SPACE AT THE BASE OF THE CURB RAMP WILL FALL WITHIN THE PEDESTRIAN CROSSWALK LINES.
4. SET BACK DISTANCE FROM INSIDE CROSSWALK MARKING TO NEAREST EDGE OF TRAVEL LANE IS 4' MINIMUM.
5. REFER TO THE PAVEMENT MARKING PLANS FOR STOP BAR LOCATIONS AT SIGNALIZED INTERSECTIONS. IF A PAVEMENT MARKING PLAN IS NOT PROVIDED, CONTACT THE SIGNAL DESIGN SECTION FOR THE STOP BAR LOCATIONS OR LOCATE AS DIRECTED BY THE ENGINEER.
6. TERMINATE PARKING A MINIMUM OF 20' BACK OF A PEDESTRIAN CROSSWALK.
7. CONSTRUCT CURB RAMPS A MINIMUM OF 4' WIDE.
8. CONSTRUCT THE RUNNING SLOPE OF THE RAMP 8.33% MAXIMUM.
9. ALLOWABLE CROSS SLOPE ON SIDEWALKS AND CURB RAMPS WILL BE 2% MAXIMUM.
10. CONSTRUCT THE SIDE FLARE SLOPE A MAXIMUM OF 10% MEASURED ALONG THE CURB LINE.
11. CONSTRUCT THE COUNTER SLOPE OF THE GUTTER OR STREET AT THE BASE OF THE CURB RAMP A MAXIMUM OF 5% AND MAINTAIN A SMOOTH TRANSITION.
12. CONSTRUCT LANDINGS FOR SIDEWALK A MINIMUM OF 4'x4' WITH A MAXIMUM SLOPE OF 2% IN ANY DIRECTION. CONSTRUCT LANDINGS FOR MEDIAN ISLANDS A MINIMUM OF 5'x5' WITH A MAXIMUM SLOPE OF 2% IN ANY DIRECTION.
13. TO USE A MEDIAN ISLAND AS A PEDESTRIAN REFUGE AREA, MEDIAN ISLANDS WILL BE A MINIMUM OF 6' WIDE. CONSTRUCT MEDIAN ISLANDS TO PROVIDE PASSAGE OVER OR THROUGHT THE ISLAND.
14. SMALL CHANNELIZATION ISLANDS THAT CAN NOT PROVIDE A 5'X5' LANDING AT THE TOP OF A RAMPS, WILL BE CUT THROUGH LEVEL WITH THE SURFACE STREET.
15. CURB RAMPS WITH RETURNED CURBS MAY BE USED ONLY WHERE PEDESTRIANS WOULD NOT NORMALLY WALK ACROSS THE RAMP. THE ADJACENT SURFACE IS PLANTING OR OTHER NON-WALKING SURFACE OR THE SIDE APPROACH IS SUBSTANTIALLY OBSTRUCTED.
16. PLACE A ½" EXPANSION JOINT WHERE THE CONCRETE CURB RAMP JOINS THE CURB AS SHOWN IN ROADWAY STANDARD DRAWING 848.01
17. PLACE ALL PEDESTRIAN PUSH BUTTON ACTUATORS AND CROSSING SIGNALS AS SHOWN IN THE PLANS OR AS SHOWN IN THE MUTCD.
18. CURB RAMPS THROUGH MEDIAN ISLANDS, SINGLE RAMPS AT DUAL CROSSWALKS OR LIMITED R/W SITUATIONS, WILL BE HANDLED BY SPECIAL DETAILS. CONTACT THE CONTRACT STANDARDS AND DEVELOPMENT UNIT FOR THE DETAILS OR FOR A SPECIAL DESIGN.

1-18 STATE OF NORTH CAROLINA DEPT. OF TRANSPORTATION DIVISION OF HIGHWAYS RALEIGH, N.C.

ROADWAY STANDARD DRAWING FOR **CURB RAMPS** NOTES

SHEET 3 OF 3 **848.05**

GENERAL NOTES

USE 4000 PSI MINIMUM COMPRESSIVE STRENGTH CONCRETE.

USE ASTM A615 GRADE 60 REINFORCING STEEL. USE ASTM A1064 WELDED WIRE FABRIC (WWF).

FABRICATE, ASSEMBLE AND DESIGN PRECAST MANHOLE COMPONENTS ACCORDANCE WITH AASHTO M199.

ASSEMBLE RISER AND GRADE RINGS WITH THE STEPS SPACED 12" FROM THE TOP TO THE BOTTOM OF THE MANHOLE.

WHERE THE MANHOLE IS EXPOSED TO ROAD TRAFFIC, CONSTRUCT THE TOP OF THE MANHOLE FLUSH WITH THE GROUND AND A MINIMUM OF 9" ABOVE THE GROUND AT OTHER LOCATIONS.

LIMIT DEPTH OF FILL TO 30'-0" FROM FINISH GRADE TO TOP OF BOTTOM SLAB.

THE MIN. SLAB THICKNESS 'T' IS THE DIMENSION OF THE THINNEST PORTION OF THE TOP/BOTTOM SLAB.

* TOP MAT OF REINFORCEMENT MAY BE NEGLECTED IF TOP SLAB HAS A DISTINGUISHABLE TOP AND BOTTOM.

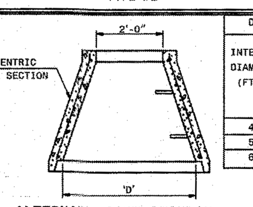

D	W	T	As
INTERNAL DIAMETER (FT.)	MIN. WALL THICKNESS (IN.)	MIN. TOP/BOTTOM SLAB THICKNESS (IN.)	MIN. CIRCUMFERENTIAL AREA OF STEEL PER VERTICAL FT. (SQ. IN.)
4	4	6	0.12
5	5	8	0.15
6	6	8	0.18

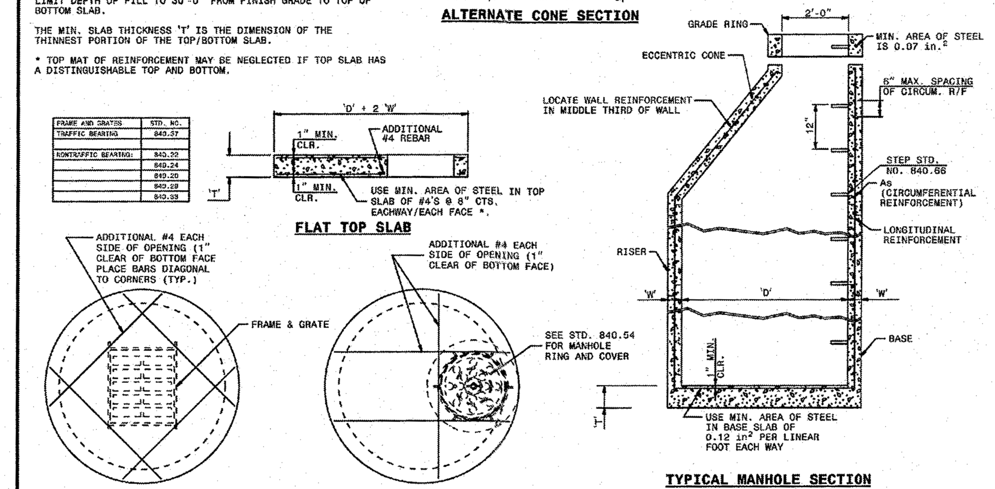

1-18 STATE OF NORTH CAROLINA DEPT. OF TRANSPORTATION DIVISION OF HIGHWAYS RALEIGH, N.C.

ROADWAY STANDARD DRAWING FOR **PRECAST MANHOLE 4',5' AND 6' DIAMETER** 12" THRU 48" PIPE

SHEET 1 OF 1 **840.52**

NOTES:

CONSTRUCT STANDARD SIDEWALK 5' WIDE AND 4" THICK UNLESS OTHERWISE DENOTED ON PLANS.

PLACE A GROOVE JOINT 1" DEEP WITH ⅛" RADII IN THE CONCRETE SIDEWALK AT 5' INTERVALS. ONE ½" EXPANSION JOINT WILL BE REQUIRED AT 50' INTERVALS. A ½" EXPANSION JOINT WILL BE REQUIRED WHERE THE SIDEWALK JOINS ANY RIGID STRUCTURE.

SEE STD. DWG. 848.05 FOR CURB RAMP LOCATION REQUIREMENTS AND CONSTRUCTION GUIDELINES.

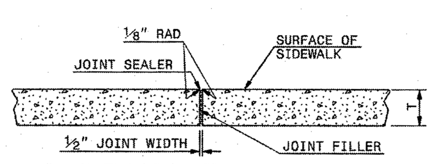

T = SIDEWALK THICKNESS

TRANSVERSE EXPANSION JOINT IN SIDEWALK

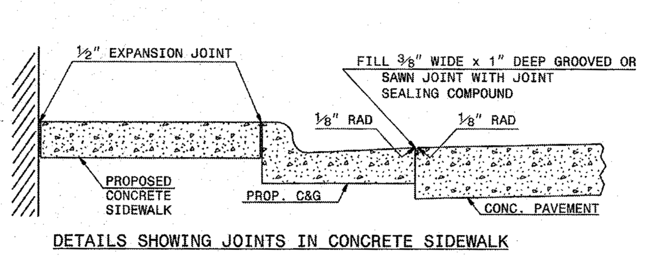

DETAILS SHOWING JOINTS IN CONCRETE SIDEWALK

1-18 STATE OF NORTH CAROLINA DEPT. OF TRANSPORTATION DIVISION OF HIGHWAYS RALEIGH, N.C.

ROADWAY STANDARD DRAWING FOR **CONCRETE SIDEWALK**

SHEET 1 OF 1 **848.01**

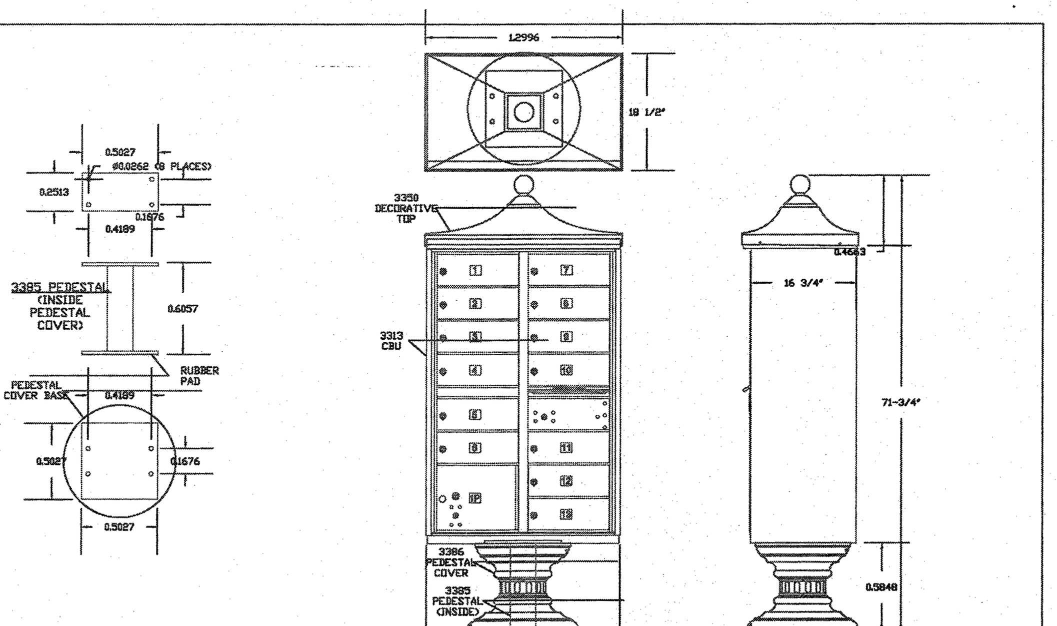

DLN 10/28/2009 1:1	SALSBURY email: engineering@mailboxes.com 1010 E. 62nd Street Los Angeles, CA 90001 Phone: (800) 624-5269 Fax: (800) 624-5299	REGENCY CLUSTER BOX UNITS 3300R SERIES "F" CBUs AVAILABLE FOR USPS ACCESS OR PRIVATE ACCESS	(13) MAILBOXES (1) OUTGOING MAIL COMPARTMENT (1) PARCEL LOCKERS	3313R CAD_3313R

NOTE:
ALL CONSTRUCTION TO BE IN ACCORDANCE WITH ALL TOWN OF ROLESVILLE, CITY OF RALEIGH AND/OR NCDOT STANDARDS AND SPECIFICATIONS

THIS DRAWING PREPARED AT THE
RALEIGH OFFICE
5410 Trinity Road, Suite 102 | Raleigh, NC 27607
TEL 919.866.4951 FAX 919.833.8124 www.timmons.com

YOUR VISION ACHIEVED THROUGH OURS.

REVISION DESCRIPTION	DATE

DATE	02/04/2020
DRAWN BY	331
DESIGNED BY	331
CHECKED BY	JFC
SCALE	NTS

TIMMONS GROUP
NORTH CAROLINA LICENSE NO. C-1652

REGENCY AT HERITAGE - PHASE 3

ROLESVILLE - WAKE COUNTY - NORTH CAROLINA

NOTES & DETAILS

JOB NO.	40013
SHEET NO.	C6.1

These plans and associated documents are the exclusive property of TIMMONS GROUP and may not be reproduced in whole or in part and shall not be used for ... including, but not limited to construction, bidding, and/or construction staking without the express written consent of TIMMONS GROUP.

S:\331\40013-Regency_at_Heritage_Revision\DWG\Sheet\CD\ROLESVILLE CD\40013-RL-C7.0-DETAIL SHEETS.dwg | Plotted by Sean Hein

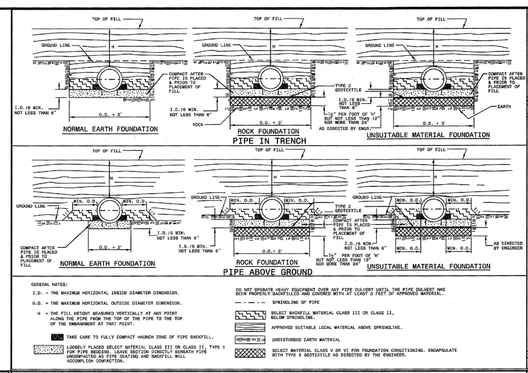

ROADWAY STANDARD DRAWING FOR
METHOD OF PIPE INSTALLATION
RIGID PIPE
STATE OF NORTH CAROLINA DEPT. OF TRANSPORTATION DIVISION OF HIGHWAYS RALEIGH, N.C.
SHEET 2 OF 2
300.01

FLEXIBLE PIPE

Round Corrugated Steel Pipe
2 2/3 x ½ corrugation **

Diameter (inches)	Minimum cover (inches)	Minimum height of cover (feet) (Ga) 14	12	10	8
12	12	102	156	187	204
15	12	102	204		
18	12	135	180	239	
21	12	115	145	204	
24	12	100	125	178	
30	12	79	100	142	
36	12	65	83	117	152
42	12	55	70	100	130	160
48	12	48	61	87	113	139
54	12		54	77	100	123
60	12			69	90	111
66	12				81	100
72	12				74	91
78	12					81
84	12					69

Round Corrugated Aluminum Pipe
2 2/3 x ½ corrugation **

Diameter (inches)	Minimum cover (inches)	Minimum height of cover (feet) (Ga) 14	12	10	8
12	12	123	163	218	244
15	12	96	123	174	224	275
18	12	81	102	144	187	228
21	12	69	87	123	160	190
24	12	60	76	108	139	171
27	12		67	95	133	151
30	12		60	85	111	136
36	12		50	71	92	113
42	12			61	79	97
48	12			52	68	84
54	12			46	50	74
60	12				50	62
66	12					51
72	12					41

** FOR DIFFERENT CORRUGATIONS AND ARCH PIPES REFER TO ROADWAY DESIGN MANUAL OR MANUFACTURERS SPECIFICATION.

REFER TO THE FOLLOWING FOR PIPE SPECIFICATIONS

CSP - AASHTO M36
CAAP - AASHTO M196
HDPE - AASHTO M294
PVC - ASTM F949 or AASHTO M304

NOTES: FILL HEIGHTS SHOWN WERE CALCULATED USING AASHTO LRFD BRIDGE DESIGN SPECIFICATIONS

1' MINIMUM COVER FOR ALL SIDE DRAIN PIPE IN ACCORDANCE WITH THE STANDARD SPECIFICATIONS

HDPE - * (Minimum fill) 8' for pipe diameters ≥ 12" and ≤ 60"
(Maximum fill) 20' for pipe diameters ≥ 24"
17' for pipe diameters ≥ 36" and ≤ 60"

PVC - * (Minimum fill) 8' for pipe diameters ≥ 12" and ≤ 36"
(Maximum fill) 50' for pipe diameters ≥ 12" and ≤ 36"

* FILL HEIGHT IS MEASURED FROM THE TOP OF THE PIPE TO THE BOTTOM OF THE PAVEMENT STRUCTURE

RIGID PIPE

RCP - * (Minimum fill) 1' for Class IV & CLASS V
2' for Class III & Class II

* (Maximum fill) 10' - Class II pipe
20' - Class III pipe
36' - Class IV pipe
42' - Class V pipe

(For fills > 40' & < 80' use LRFD Direct Design Method)

REFER TO THE FOLLOWING FOR PIPE SPECIFICATIONS

RCP - AASHTO M170

NOTES: FILL HEIGHTS SHOWN WERE CALCULATED USING AASHTO LRFD BRIDGE DESIGN SPECIFICATIONS

1' MINIMUM COVER FOR ALL SIDE DRAIN PIPE IN ACCORDANCE WITH THE STANDARD SPECIFICATIONS

* FILL HEIGHT IS MEASURED FROM THE TOP OF THE PIPE TO THE BOTTOM OF THE PAVEMENT STRUCTURE

ROADWAY STANDARD DRAWING FOR
METHOD OF PIPE INSTALLATION
FILL HEIGHT TABLES
STATE OF NORTH CAROLINA DEPT. OF TRANSPORTATION DIVISION OF HIGHWAYS RALEIGH, N.C.
SHEET 3 OF 3
300.01

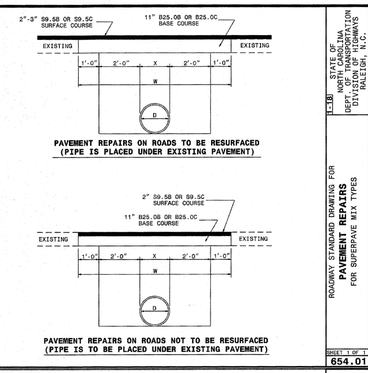

D	X	W
12"	1'-4"	7'-4"
15"	1'-7"	7'-7"
18"	1'-10"	7'-10"
24"	2'-6"	8'-6"
30"	3'-1"	9'-1"
36"	3'-8"	9'-8"
42"	4'-5"	10'-5"
48"	5'-0"	11'-0"

ROADWAY STANDARD DRAWING FOR
METHOD OF PIPE INSTALLATION
FILL HEIGHT TABLES
STATE OF NORTH CAROLINA DEPT. OF TRANSPORTATION DIVISION OF HIGHWAYS RALEIGH, N.C.
SHEET 3 OF 3
300.01

ROADWAY STANDARD DRAWING FOR
PAVEMENT REPAIRS
FOR SUPERPAVE MIX TYPES
STATE OF NORTH CAROLINA DEPT. OF TRANSPORTATION DIVISION OF HIGHWAYS RALEIGH, N.C.
SHEET 1 OF 1
654.01

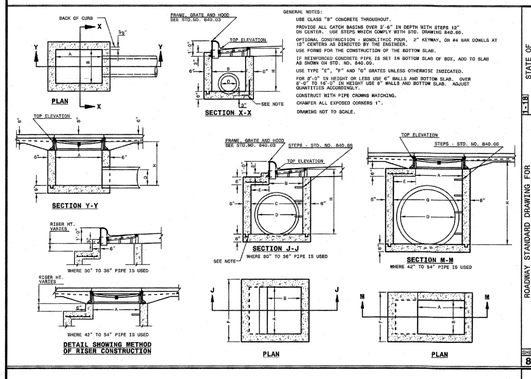

GENERAL NOTES:
USE CLASS "B" CONCRETE THROUGHOUT.
PROVIDE ALL GATOR BASINS OVER 3'-6" IN DEPTH WITH STEPS 12" ON CENTER. USE STEPS WHICH COMPLY WITH STD. DRAWING 840.66.
OPTIONAL CONSTRUCTION - MONOLITHIC POUR. 2" KEYWAY, OR #4 BAR DOWELS AT 12" CENTERS AS DIRECTED BY THE ENGINEER.
USE FORMS FOR THE CONSTRUCTION OF THE BOTTOM SLAB.
IF REINFORCED CONCRETE PIPE IS SET IN BOTTOM SLAB OF BOX, ADD TO SLAB AS SHOWN ON STD. NO. 840.00.
USE TYPE "E", "F" AND "G" GRATES UNLESS OTHERWISE INDICATED.
FOR 3' IN HEIGHT OR LESS USE 8" WALLS AND BOTTOM SLAB. OVER 3'-0" TO 16'-0" IN HEIGHT USE 9" WALLS AND BOTTOM SLAB. ADJUST QUANTITIES ACCORDINGLY.
CONSTRUCT WITH PIPE CHANNEL MATCHING.
CHAMFER ALL EXPOSED CORNERS 1".
DRAWING NOT TO SCALE.

ROADWAY STANDARD DRAWING FOR
CONCRETE CATCH BASIN
12" THRU 54" PIPE
STATE OF NORTH CAROLINA DEPT. OF TRANSPORTATION DIVISION OF HIGHWAYS RALEIGH, N.C.
SHEET 1 OF 2
840.02

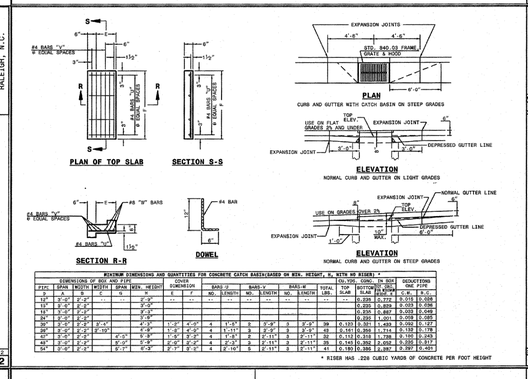

MINIMUM DIMENSIONS AND QUANTITIES FOR CONCRETE CATCH BASIN(BASED ON WEN. HEIGHT, H, WITH NO RISER) *																	
DIMENSIONS OF BOX AND PIPE							COVER DIMENSION		BARS "X"		BARS "Y"		BARS"W"		TOTAL	TOP SLAB	BOTTOM SLAB	CONC. IN BOX CULV. SLAB	DEDUCTIONS ONE PIPE	
PIPE	SPAN	WIDTH	WIDTH	HEIGHT	SPAN	WIDTH	HEIGHT	E	F	NO.	LENGTH	NO.	LENGTH	NO.	LENGTH	LBS.	C.Y.	C.Y.	C.Y.	S.Y.
D	A	B	C	G	H															
12"	2'-0"	2'-0"			2'-0"			--	--	--	--	--	--	--	--	--	0.208	0.172	0.015	0.086
15"	2'-0"	2'-0"			2'-0"			--	--	--	--	--	--	--	--	--	0.220	0.229	0.020	0.098
18"	2'-0"	2'-0"			2'-0"			--	--	--	--	--	--	--	--	--	0.233	0.286	0.025	0.109
24"	2'-0"	2'-0"			2'-0"			--	--	--	--	--	--	--	--	--	0.258	0.402	0.036	0.085
30"	2'-0"	2'-0"	2'-0"		2'-0"	1'-0"	4'-0"	4	1'-11"	5	2'-9"	3	2'-9"	39	0.120	0.321	1.493	0.102	0.127
36"	2'-0"	2'-0"	2'-0"		2'-0"	1'-0"	4'-0"	4	1'-11"	5	2'-9"	48	2'-9"	48	0.141	0.386	1.714	0.118	0.178
42"	2'-0"	2'-0"		4'-0"	2'-0"	1'-0"	4'-0"	4	1'-11"	5	2'-11"	52	2'-11"	52	0.152	0.315	1.726	0.150	0.243
48"	2'-0"	2'-0"		4'-0"	2'-0"	1'-0"	4'-0"	4	1'-11"	5	3'-2"	57	3'-2"	57	0.163	0.286	1.652	0.205	0.317
54"	2'-0"	2'-0"		2'-0"	2'-0"	2'-0"	4'-0"	4	2'-10"	5	2'-11"	3	2'-11"	41	0.180	10.395	1.287	0.297	0.455

* RIBER NMB .226 CUBIC YARDS OF CONCRETE PER FOOT HEIGHT

ROADWAY STANDARD DRAWING FOR
CONCRETE CATCH BASIN
12" THRU 54" PIPE
STATE OF NORTH CAROLINA DEPT. OF TRANSPORTATION DIVISION OF HIGHWAYS RALEIGH, N.C.
SHEET 2 OF 2
840.02

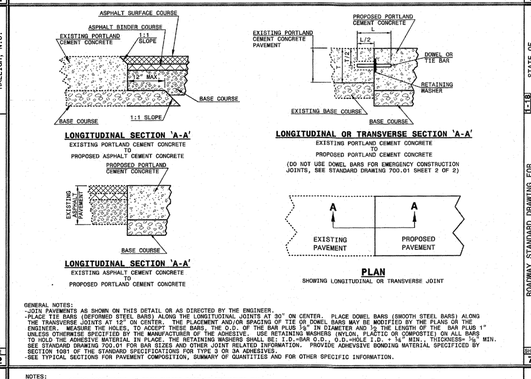

GENERAL NOTES:
-JOIN PAVEMENTS AS SHOWN ON THIS DETAIL OR AS DIRECTED BY THE ENGINEER.
-PLACE TII BARS (DEFORMED STEEL BARS) ALONG THE LONGITUDINAL JOINTS AT 30" ON CENTER. PLACE DOWEL BARS (SMOOTH STEEL BARS) ALONG THE TRANSVERSE JOINTS AT 12" ON CENTER. THE PLACEMENT AND/OR SPACING OF TIE OR DOWEL BARS MAY BE MODIFIED BY THE PLANS OR THE ENGINEER. MEASURE THE HOLES, TO ACCEPT THESE BARS, THE O.D. OF THE BAR PLUS ¼" IN DIAMETER AND ½ THE LENGTH OF THE BAR PLUS 1" UNLESS OTHERWISE SPECIFIED BY THE MANUFACTURER OF THE ADHESIVE. USE RETAINING WASHERS (NYLON, PLACTIC OR COMPOSITE) ON ALL BARS. USE DOWEL BARS (SMOOTH STEEL BARS) WITH DIMENSIONS OF 1" DIA. X 18" LONG, 0.D.=DIA. + 0 - ¼ MIN. PRECISENESS ⅛" MIN. SEE STANDARD DRAWING 700.01 FOR BAR SIZES AND OTHER JOINT RELATED INFORMATION. PROVIDE ADHESIVE BONDING MATERIAL SPECIFIED BY SECTION 1081 OF THE STANDARD SPECIFICATIONS FOR TYPE 3 OR 3A ADHESIVES.
-SEE TYPICAL SECTIONS FOR PAVEMENT COMPOSITION, SUMMARY OF QUANTITIES AND FOR OTHER SPECIFIC INFORMATION.

ROADWAY STANDARD DRAWING FOR
TYING PROPOSED PAVEMENT TO EXISTING PAVEMENT
STATE OF NORTH CAROLINA DEPT. OF TRANSPORTATION DIVISION OF HIGHWAYS RALEIGH, N.C.
SHEET 1 OF 1
700.05

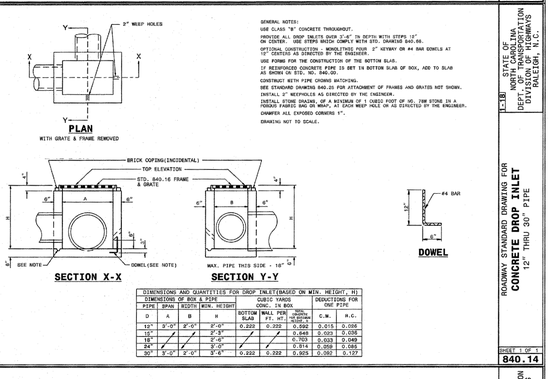

GENERAL NOTES:
USE CLASS "B" CONCRETE THROUGHOUT.
PROVIDE ALL DROP INLETS OVER 3'-6" IN DEPTH WITH STEPS 12" ON CENTER. USE STEPS WHICH COMPLY WITH STD. DRAWING 840.66.
OPTIONAL CONSTRUCTION - MONOLITHIC POUR. 2" KEYWAY OR #4 BAR DOWELS AT 12" CENTERS AS DIRECTED BY THE ENGINEER.
USE FORMS FOR THE CONSTRUCTION OF THE BOTTOM SLAB.
IF REINFORCED CONCRETE PIPE IS SET IN BOTTOM SLAB OF BOX, ADD TO SLAB AS SHOWN ON STD. NO. 840.00.
CONSTRUCT WITH PIPE CHANNEL MATCHING.
USE STANDARD DRAWING 840.20 FOR ATTACHMENT OF FRAMES AND GRATES NOT SHOWN.
INSTALL WEEPHOLES AS DIRECTED BY THE ENGINEER.
PROVIDE STRUCTURAL STEEL FRAME MEETING M 1 CARBON STEEL OF NO. 288 STONE IN A FORGED FABRIC AND 285 WEAK, AT GRADE WEIGHT PAIR OR AS DIRECTED BY THE ENGINEER.
CHAMFER ALL EXPOSED CORNERS 1".
DRAWING NOT TO SCALE.

DIMENSIONS AND QUANTITIES FOR DROP INLET(BASED ON MIN. HEIGHT, H)							
DIMENSIONS OF BOX & PIPE				CUBIC YARDS CONC. IN BOX		DEDUCTIONS FOR ONE PIPE	
PIPE	SPAN	WIDTH	WIDTH	MIN. HEIGHT	BOTTOM SLAB	WALL PER SIDE	TOP SLAB OVER PIPE
D	A	B		H		FT. HT.	C.Y.
12"	3'-0"	2'-0"	2'-0"		0.222	0.222	0.092
15"			2'-0"				0.048
18"			2'-0"				0.063
24"			3'-0"				0.014
30"	3'-0"	2'-0"	3'-0"		0.222	0.222	0.025

C.Y.	A.C.
0.015	0.026
0.023	0.036
0.033	0.049
0.050	0.085
0.050	0.127

ROADWAY STANDARD DRAWING FOR
CONCRETE DROP INLET
12" THRU 30" PIPE
STATE OF NORTH CAROLINA DEPT. OF TRANSPORTATION DIVISION OF HIGHWAYS RALEIGH, N.C.
SHEET 1 OF 4
840.14

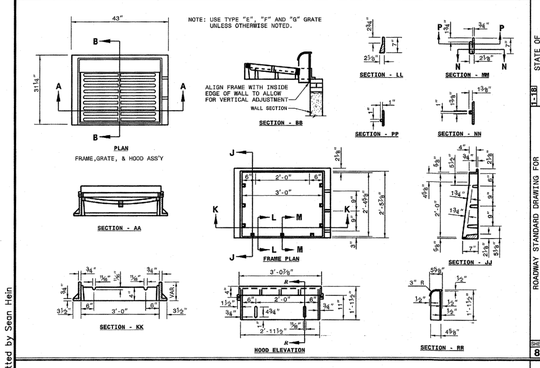

ROADWAY STANDARD DRAWING FOR
FRAME, GRATES, AND HOOD
FOR USE ON STANDARD CATCH BASIN
STATE OF NORTH CAROLINA DEPT. OF TRANSPORTATION DIVISION OF HIGHWAYS RALEIGH, N.C.
SHEET 1 OF 2
840.03

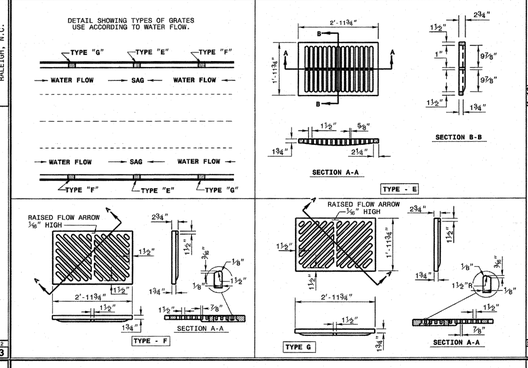

ROADWAY STANDARD DRAWING FOR
FRAME, GRATES, AND HOOD
FOR USE ON STANDARD CATCH BASIN
STATE OF NORTH CAROLINA DEPT. OF TRANSPORTATION DIVISION OF HIGHWAYS RALEIGH, N.C.
SHEET 2 OF 2
840.03

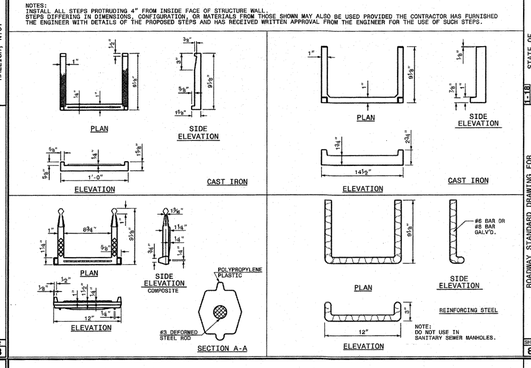

NOTES:
INSIDE ALL STEPS PROTRUDING 4" FROM INSIDE FACE OF STRUCTURE WALL.
STEPS DIFFERING IN DIMENSIONS, CONFIGURATION, OR MATERIALS FROM THOSE SHOWN MAY ALSO BE USED PROVIDED THE CONTRACTOR HAS FURNISHED THE ENGINEER WITH DETAILS OF THE PROPOSED STEPS AND HAS RECEIVED WRITTEN APPROVAL FROM THE ENGINEER FOR THE USE OF SUCH STEPS.

ROADWAY STANDARD DRAWING FOR
DRAINAGE STRUCTURE STEPS
STATE OF NORTH CAROLINA DEPT. OF TRANSPORTATION DIVISION OF HIGHWAYS RALEIGH, N.C.
SHEET 1 OF 1
840.66

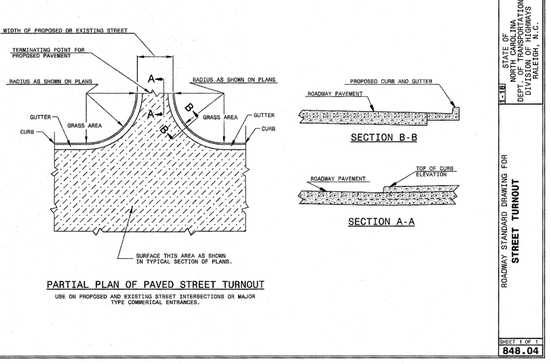

ROADWAY STANDARD DRAWING FOR
STREET TURNOUT
STATE OF NORTH CAROLINA DEPT. OF TRANSPORTATION DIVISION OF HIGHWAYS RALEIGH, N.C.
SHEET 1 OF 4
848.04

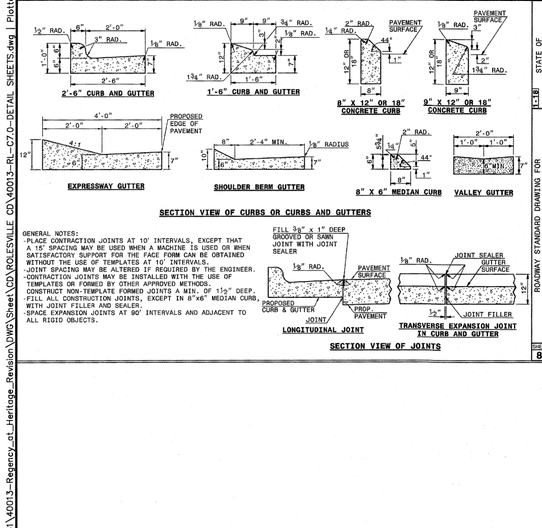

ROADWAY STANDARD DRAWING FOR
CONCRETE CURB, GUTTER AND CURB & GUTTER
STATE OF NORTH CAROLINA DEPT. OF TRANSPORTATION DIVISION OF HIGHWAYS RALEIGH, N.C.
SHEET 1 OF 3
846.01

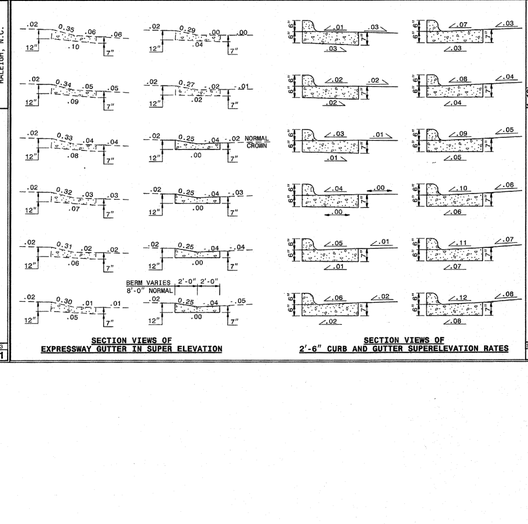

ROADWAY STANDARD DRAWING FOR
CONCRETE CURB, GUTTER AND CURB & GUTTER
STATE OF NORTH CAROLINA DEPT. OF TRANSPORTATION DIVISION OF HIGHWAYS RALEIGH, N.C.
SHEET 2 OF 3
846.01

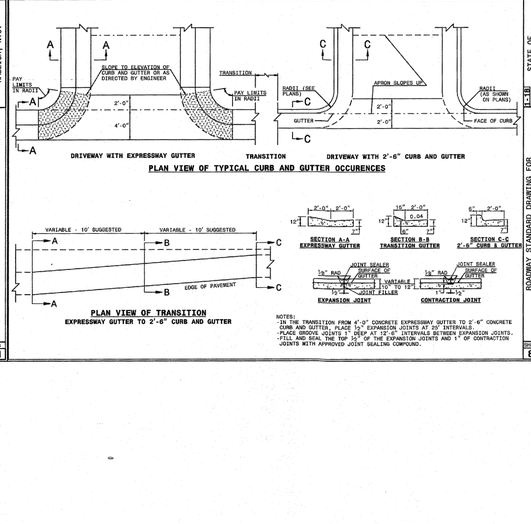

NOTES:
-IN THE TRANSITION FROM 4'-0" CONCRETE EXPRESSWAY GUTTER TO 2'-6" CONCRETE CURB AND GUTTER, PLACE ½" EXPANSION JOINTS AT 30' INTERVALS.
-PLACE GROOVE JOINTS 1" DEEP AT 12'-0" INTERVALS BETWEEN EXPANSION JOINTS.
-FILL AND SEAL THE TOP ½" OF THE EXPANSION JOINTS AND 1" OF CONTRACTION JOINTS WITH APPROVED JOINT SEALING COMPOUND.

ROADWAY STANDARD DRAWING FOR
CONCRETE CURB, GUTTER AND CURB & GUTTER
STATE OF NORTH CAROLINA DEPT. OF TRANSPORTATION DIVISION OF HIGHWAYS RALEIGH, N.C.
SHEET 3 OF 3
846.01

NOTE:
ALL CONSTRUCTION TO BE IN ACCORDANCE WITH ALL TOWN OF ROLESVILLE, CITY OF RALEIGH AND/OR NCDOT STANDARDS AND SPECIFICATIONS

THIS DRAWING PREPARED AT THE
RALEIGH OFFICE
5410 Trinity Road, Suite 102 | Raleigh, NC 27607
TEL 919.866.4951 FAX 919.833.8124 www.timmons.com

YOUR VISION ACHIEVED THROUGH OURS.

REVISION DESCRIPTION	DATE

DATE 02/04/2020
DRAWN BY 331
DESIGNED BY 331
CHECKED BY JFC
SCALE NTS

TIMMONS GROUP

NORTH CAROLINA LICENSE NO. C-1652

REGENCY AT HERITAGE - PHASE 3
ROLESVILLE - WAKE COUNTY - NORTH CAROLINA
NOTES & DETAILS

JOB NO. 40013
SHEET NO. C6.2

These plans and associated documents are the exclusive property of TIMMONS GROUP and may not be reproduced in whole or in part and shall not be used for any purpose whatsoever, inclusive, but not limited to construction, bidding, and/or construction staking without the express written consent of TIMMONS GROUP.

S:\33\40013-Regency at Heritage_Revision\DWG\Sheet\CD\ROLESVILLE CD\40013-RL-C7.0-DETAIL SHEETS.dwg | Plotted by Sean Hein

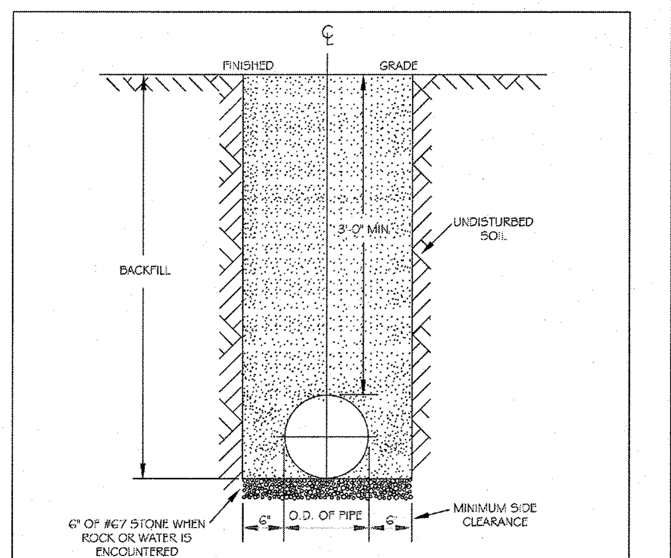

NOTES:
1. TRENCHES REQUIRING SHORING AND BRACING, DIMENSIONS SHALL BE TAKEN FROM THE INSIDE FACE OF THE SHORING AND BRACING.
2. NO ROCKS OR BOULDERS 4" OR LARGER TO BE USED IN BACKFILL.
3. ALL BACKFILL MATERIAL SHALL BE SUITABLE NATIVE MATERIAL.
4. BACKFILL SHALL BE TAMPED IN 6" LIFTS.
5. ACHIEVE 95% COMPACTION IN BACKFILL.

CITY OF RALEIGH
DEPARTMENT OF PUBLIC UTILITIES
TRENCH BOTTOM DIMENSIONS & BACKFILLING REQUIREMENTS FOR DUCTILE IRON

DWG. NO.	REVISIONS	DATE	REVISIONS	DATE
W-3	D.W.C.	9-3-99	ABB	2-15-05
	RRH	3-31-00	J.P.S.	10-29-10

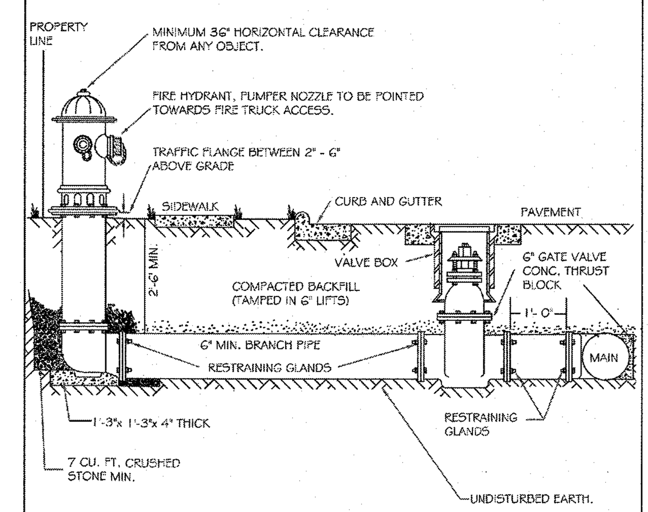

NOTES:
1. FIRE HYDRANT SHALL BE AS MANUFACTURED: MUELLER, AMERICAN DARLING, KENNEDY, M&H, WATEROUS, CLOW, EAST JORDAN IRON WORKS, OR US PIPE.
2. BRANCH PIPE SHALL BE DUCTILE IRON AWWA C150-96
3. 6" GATE VALVE SHALL BE AWWA C500-86 OPEN LEFT
4. STEEL RODS AND BOLTS SHALL BE ¾" HOT DIPPED GALVANIZED
5. FIRE HYDRANTS WILL BE INSTALLED IN TRUE VERTICAL POSITION
RODS SHALL NOT BE COUPLED MORE THAN ONCE. IF THE LENGTH FROM THE VALVE TO THE HYDRANT EXCEEDS 20' THEN A MECHANICAL RESTRAINING GLAND WITH A REBAR CAGE SHALL BE INSTALLED NO MORE THAN 10' FROM HYDRANT AND POURED IN CONCRETE.
FIRE HYDRANTS TO BE LOCATED IN ROW OR 2 FOOT EASEMENT ADJACENT TO ROW

ANYTIME SITE WORK, CONSTRUCTION, ROAD WORK, OR ANY OTHER WORK CHANGES THE GRADE OF THE FIRE HYDRANT, THE PERSON RESPONSIBLE FOR THE WORK IS RESPONSIBLE FOR ADJUSTING THE FIRE HYDRANT TO STAY WITHIN COMPLIANCE.

CITY OF RALEIGH
DEPARTMENT OF PUBLIC UTILITIES
STANDARD FIRE HYDRANT INSTALLATION DETAIL

DWG. NO.	REVISIONS	DATE	REVISIONS	DATE
W-4	ABB	4-6-04	PAP	2/17/09
	DHL	2/14/08		

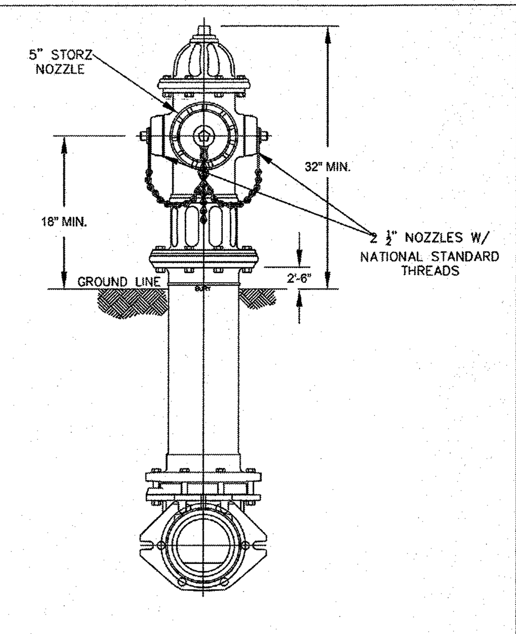

NOTES:
1. ALL PUBLIC FIRE HYDRANTS IN THE CITY OF RALEIGH AND THE MERGER TOWNS OF GARNER, ROLESVILLE, WAKE FOREST, KNIGHTDALE, WENDELL AND ZEBULON SHALL BE PAINTED CHROME YELLOW WITH HIGH REFLECTIVE ALUMINUM SILVER CAPS, BONNETS AND OPERATING NUTS.

CITY OF RALEIGH
DEPARTMENT OF PUBLIC UTILITIES
RALEIGH, GARNER, KNIGHTDALE, ROLESVILLE, WAKE FOREST, WENDELL & ZEBULON
STANDARD FIRE HYDRANT WITH 5" STORZ PUMPER NOZZLE

DWG. NO.	REVISIONS	DATE	REVISIONS	DATE
W-5	MAB	6-30-16		

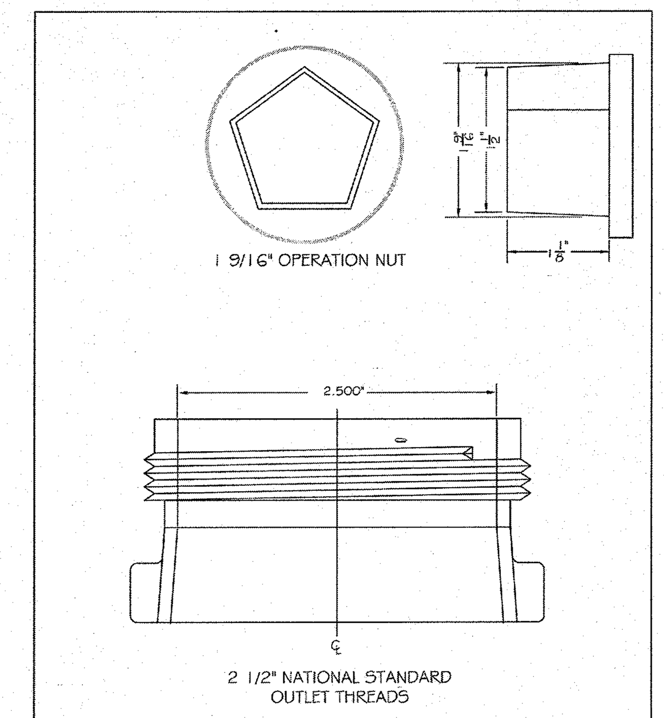

CITY OF RALEIGH
DEPARTMENT OF PUBLIC UTILITIES
HYDRANT OPERATING NUT AND 2 1/2" OUTLET THREADS

DWG. NO.	REVISIONS	DATE	REVISIONS	DATE
W-6	RRH	3-31-00	DHL	2-18-08
	A.B.B.	4-13-04	J.P.S.	11-1-10

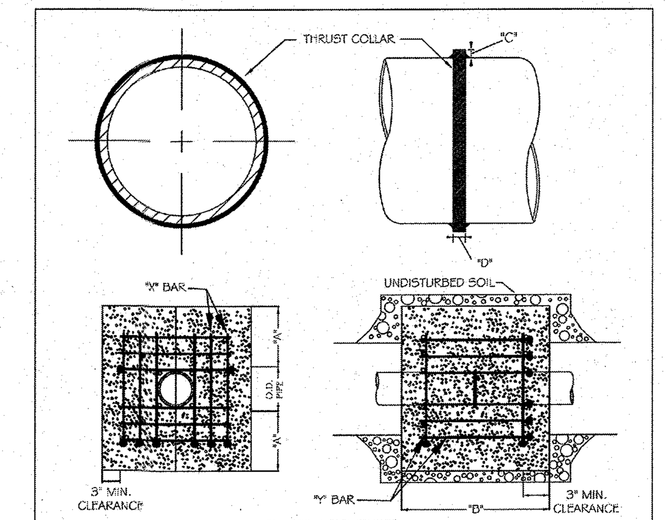

REINFORCING REQUIREMENTS

I.D. PIPE	REBAR SIZE	"X" BAR LENGTH	"X" BAR WEIGHT	"Y" BAR LENGTH	"Y" BAR WEIGHT	NO. REQUIRED
6" - 36"	#5	2'-2"+ O.D. PIPE	1.043 LBS/FT	1'-1"	1.1 LBS. EACH	X-24, Y-12
48" & greater	#6	3'-0"+ O.D. PIPE	1.502 LBS/FT	1'-3"	1.9 LBS EACH	X-24, Y-12

THRUST COLLAR, AND THRUST SCHEDULE

I.D. PIPE	"A"	"B"	"C"	"D"
6" - 16"	1'-4"	1'-7"	2"	3/8"
20" - 24"	1'-4"	1'-7"	3"	1/2"
30" - 36"	1'-4"	1'-7"	4"	5/8"
48" & greater	1'-8"	1'-9"	6"	7/8"

NOTES:
1. SEE STANDARD DETAIL W-9 FOR THRUST BLOCK LOCATIONS.
2. CONCRETE SHALL BE 3000 PSI AND TRANSIT MIXED.
3. REINFORCING BARS SHALL BE DEFORMED AND TIED TOGETHER.
4. TRENCH BOTTOM WIDTH IN VICINITY OF THRUST BLOCK INSTALLATION SHALL BE THE MINIMUM WIDTH AS SHOWN ON STANDARD DETAIL W-3.
5. BACKFILL TAMPED IN 6" LIFTS PER STANDARD DETAIL W-3.
6. THRUST COLLAR MUST BE FACTORY WELDED ON BOTH SIDES ALONG BOTH EDGES OF COLLAR AROUND CIRCUMFERENCE.

CITY OF RALEIGH
DEPARTMENT OF PUBLIC UTILITIES
THRUST BLOCKING DESIGN DATA FOR WATER MAINS

DWG. NO.	REVISIONS	DATE	REVISIONS	DATE
W-7	RRH	1-21-00	J.P.S.	11-1-10
	D.H.L.	6-18-08		

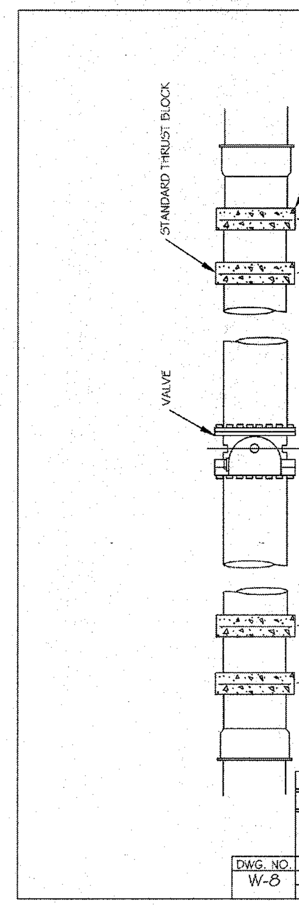

CITY OF RALEIGH
DEPARTMENT OF PUBLIC UTILITIES
STANDARD THRUST BLOCK INSTALLATION FOR 16" AND LARGER VALVES AND DEAD END MAINS

DWG. NO.	REVISIONS	DATE	REVISIONS	DATE
W-8	Y.C.A.	4-12-90	D.W.C.	9-7-99
		6-92	RRH	3-31-00

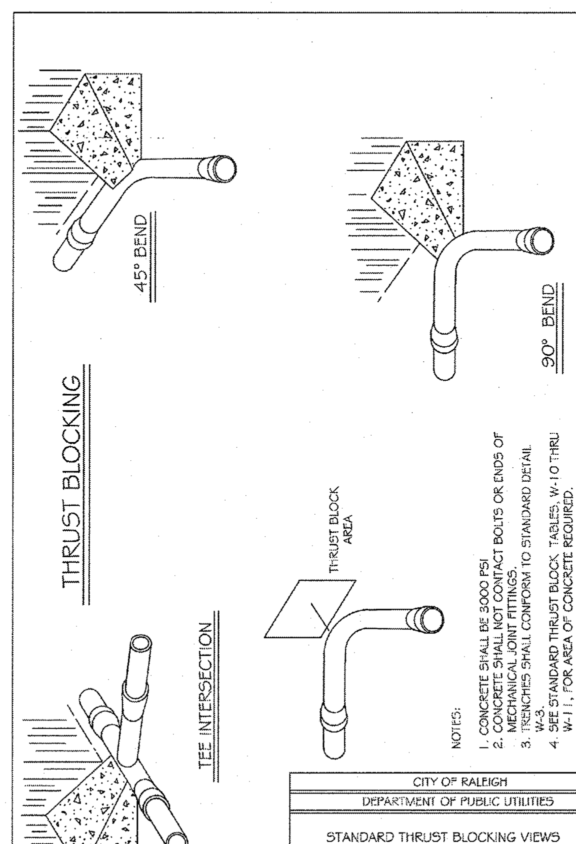

NOTES:
1. CONCRETE SHALL BE 3000 PSI
2. CONCRETE SHALL NOT CONTACT BOLTS OR ENDS OF MECHANICAL JOINT FITTINGS.
3. TRENCHES SHALL CONFORM TO STANDARD DETAIL W-3.
4. SEE STANDARD THRUST BLOCK TABLES, W-10 THRU W-11, FOR AREA OF CONCRETE REQUIRED.
5. ALL BENDS AND INTERSECTIONS SHALL HAVE CONCRETE THRUST BLOCKING.

CITY OF RALEIGH
DEPARTMENT OF PUBLIC UTILITIES
STANDARD THRUST BLOCKING VIEWS

DWG. NO.	REVISIONS	DATE	REVISIONS	DATE
W-9	D.W.C.	3-1-87	RRH	3-31-00
		9-7-99	D.H.L.	6-18-08

REACTION BEARING AREAS FOR HORIZONTAL WATER PIPE BENDS
BASED ON TEST PRESSURE OF 200 P.S.I.
ALL AREAS GIVEN IN SQUARE FEET.

SIZE AND DEGREE OF BEND	STATIC THRUST IN POUNDS	MODERATELY DRY CLAY 4000 LBS/FT²	SOFT CLAY 2000 LBS/FT²	1600 LBS/FT² GRAVEL/ COARSE SAND	8000 LBS/FT² DRY CLAY - ALWAYS DRY	SAND, COMPACT FIRM 6000 LBS/FT²	SAND -CLEAN DRY 4000 LBS/FT²	SOIL 1000 LBS/FT² QUICKSAND - VERY POOR	ROCK - POOR 10,000 LBS/FT²
6"									
11 1/4°	1,108	1	1	1	1	1	1	2	1
22 1/2°	2,207	1	2	2	1	1	1	3	1
45°	4,328	2	3	3	1	1	2	5	1
90°	7,996	2	4	5	1	1	2	8	1
PLUG	5,655	2	3	4	1	1	2	6	1
8"									
11 1/4°	1,970	1	1	2	1	1	1	2	1
22 1/2°	3,922	1	2	3	1	1	1	4	1
45°	7,694	2	4	5	1	1	2	8	1
90°	14,215	4	8	9	2	2	4	15	2
PLUG	10,053	3	5	6	2	2	3	10	1
12"									
11 1/4°	4,433	2	3	3	1	1	2	5	1
22 1/2°	8,826	3	5	6	2	2	3	9	1
45°	17,312	5	9	11	3	3	5	18	2
90°	31,983	8	16	19	4	4	8	32	4
PLUG	22,619	6	12	14	3	3	6	23	3
16"									
11 1/4°	7,881	2	4	5	1	1	2	8	1
22 1/2°	15,891	4	8	10	2	2	4	16	2
45°	30,779	8	16	19	4	4	8	31	4
90°	56,861	15	29	35	8	8	15	57	6
PLUG	40,213	10	21	25	5	5	10	41	5

REACTION BEARING AREAS ARE IN SQUARE FEET MEASURED IN A VERTICAL PLANE IN THE TRENCH SIDE AT AN ANGLE OF 90° TO THE THRUST VECTOR.

USE 6" - 90 BEND VALUE FOR HYDRANTS FOR ADDITIONAL SAFETY FACTOR.

CITY OF RALEIGH
DEPARTMENT OF PUBLIC UTILITIES
THRUST BLOCKING DESIGN QUANTITY TABLE

DWG. NO.	REVISIONS	DATE	REVISIONS	DATE
W-10	D.W.C.	6-23-99		

REACTION BEARING AREAS FOR HORIZONTAL WATER PIPE BENDS
BASED ON TEST PRESSURE OF 200 P.S.I.
ALL AREAS GIVEN IN SQUARE FEET.

SIZE AND DEGREE OF BEND	STATIC THRUST IN POUNDS	MODERATELY DRY CLAY 4000 LBS/FT²	SOFT CLAY 2000 LBS/FT²	GRAVEL/COARSE SAND 1600LBS/FT²	8000 LBS/FT² DRY CLAY - ALWAYS DRY	SAND, COMPACT FIRM 6000 LBS/FT²	SAND -CLEAN DRY 4000 LBS/FT²	SOIL 1000 LBS/FT² QUICKSAND - VERY POOR	ROCK - POOR 10,000 LBS/FT²
24"									
11 1/4°	17,734	5	9	11	3	3	5	18	2
22 1/2°	35,305	9	18	22	5	5	9	36	4
45°	69,252	18	35	42	9	9	18	70	7
90°	127,936	32	64	77	16	16	32	128	13
PLUG	90,478	23	46	55	12	12	23	91	10
30"									
11 1/4°	27,709	7	14	17	4	4	7	2	3
22 1/2°	55,163	14	28	34	7	7	14	56	6
45°	108,206	28	55	65	14	14	28	109	11
90°	199,900	50	100	120	25	25	50	200	20
PLUG	141,372	36	71	85	18	18	36	142	15
36"									
11 1/4°	39,901	10	20	24	5	5	10	40	4
22 1/2°	79,439	20	40	48	10	10	20	30	8
45°	155,816	39	78	94	20	20	39	156	16
90°	287,855	72	144	172	36	36	72	288	29
PLUG	203,575	51	102	122	26	26	51	204	21
48"									
11 1/4°	70,935	18	36	43	9	9	18	71	8
22 1/2°	141,218	36	71	85	18	18	36	142	15
45°	277,007	70	139	166	35	35	70	277	28
90°	511,742	128	256	320	64	64	128	512	52
PLUG	361,911	91	181	217	46	46	91	362	37

REACTION BEARING AREAS ARE IN SQUARE FEET MEASURED IN A VERTICAL PLANE IN THE TRENCH SIDE AT AN ANGLE OF 90° TO THE THRUST VECTOR.

USE 6" - 90° BEND VALUE FOR HYDRANTS FOR ADDITIONAL SAFETY FACTOR.

CITY OF RALEIGH
DEPARTMENT OF PUBLIC UTILITIES
THRUST BLOCKING DESIGN QUANTITY TABLE

DWG. NO.	REVISIONS	DATE	REVISIONS	DATE
W-11	D.W.C.	6-23-99		

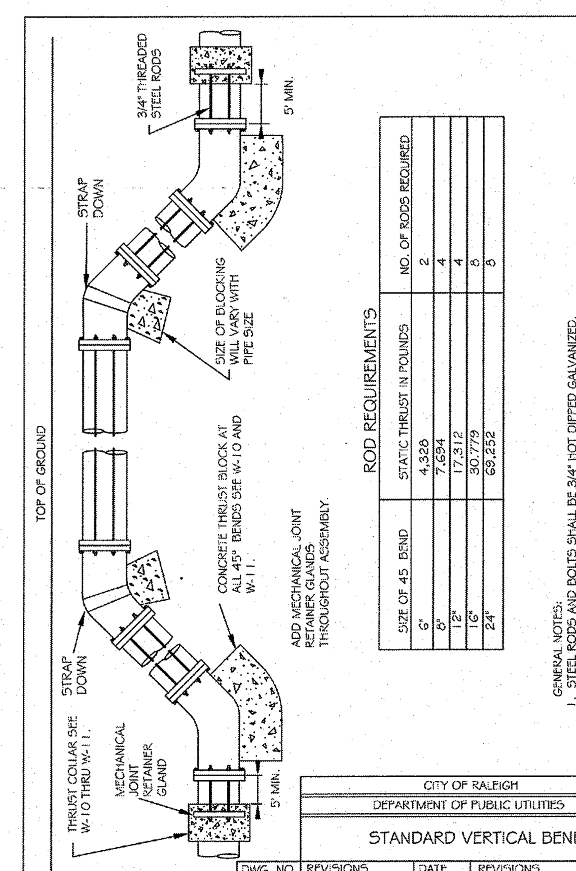

ROD REQUIREMENTS

SIZE OF 45 BEND	STATIC THRUST IN POUNDS	NO. OF RODS REQUIRED
6"	4,328	2
8"	7,694	4
12"	17,312	4
16"	30,779	8
24"	69,252	8

GENERAL NOTES:
1. STEEL RODS AND BOLTS SHALL BE 3/4" HOT DIPPED GALVANIZED.
2. CONCRETE SHALL NOT CONTACT BOLTS OR ENDS OF MECHANICAL JOINT BENDS.
3. RESTRAINED MECHANICAL GLANDS TO BE USED AT ALL FITTINGS.
4. MUST USE DUCTILE IRON EYE BOLTS WHERE NECESSARY.
5. 3' MINIMUM COVER MUST BE MAINTAINED ON ALL WATER MAINS

CITY OF RALEIGH
DEPARTMENT OF PUBLIC UTILITIES
STANDARD VERTICAL BEND

DWG. NO.	REVISIONS	DATE	REVISIONS	DATE
W-12	ABB	4-6-04	J.P.S.	11-1-10
	D.H.L.	6-18-08		

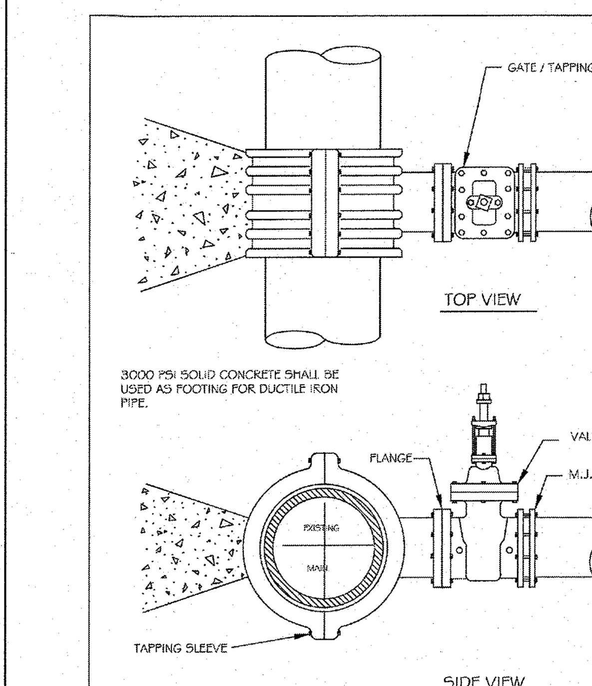

NOTES:
1. CONCRETE SHALL NOT CONTACT BOLTS OR ENDS OF MECHANICAL JOINT FITTINGS.
2. SEE STANDARD REACTION BLOCK TABLES, W-10 AND W-11 FOR AREA OF CONCRETE REQUIRED.

CITY OF RALEIGH
DEPARTMENT OF PUBLIC UTILITIES
4" - 24" STANDARD TAPPING SLEEVE AND VALVE ASSEMBLY

DWG. NO.	REVISIONS	DATE	REVISIONS	DATE
W-14	Y.C.A.	12-31-91	RRH	3-31-00
	D.W.C.	9-7-99	J.P.S.	11-1-10

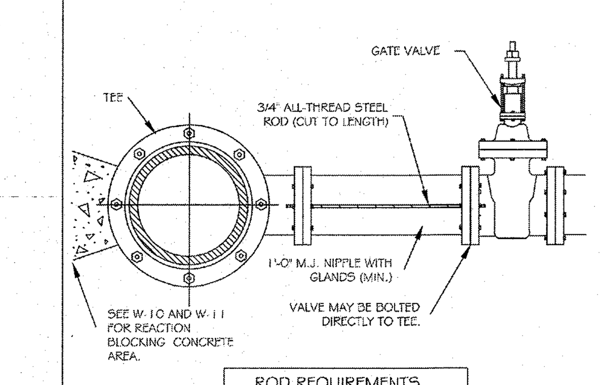

ROD REQUIREMENTS

NO. OF RODS	BRANCH SIZE
4"	2
6"	2
8"	4
12"	4
16"	6
24"	6
30"	8
36"	8

NOTES:
1. STEEL RODS AND BOLTS SHALL BE 3/4" HOT DIPPED GALVANIZED.
2. SEE STANDARD THRUST BLOCK, TABLES W-10 AND W-11 FOR CONCRETE.
3. CONCRETE SHALL NOT CONTACT BOLTS OR ENDS OF MECHANICAL FITTINGS.
4. THIS RODDING REQUIREMENT DOES NOT APPLY TO FIRE HYDRANTS.

CITY OF RALEIGH
DEPARTMENT OF PUBLIC UTILITIES
VALVE RESTRAINT AT TEES AND CROSSES FOR LINES (4"-24")

DWG. NO.	REVISIONS	DATE	REVISIONS	DATE
W-15	RRH	3-31-00	D.H.L.	6-16-08
	A.B.B.	4-19-04	J.P.S.	11-1-10

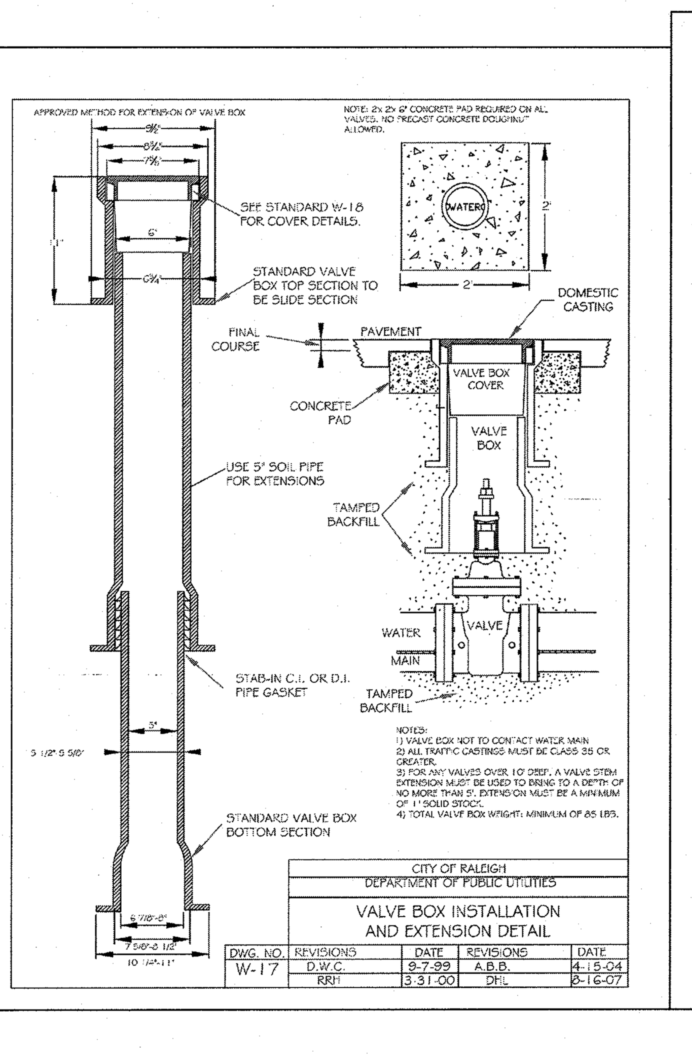

NOTES:
1) VALVE BOX NOT TO CONTACT WATER MAIN
2) ALL TRAFFIC CASTINGS MUST BE CLASS 35 OR GREATER.
3) FOR ANY VALVES OVER 10' DEEP, A VALVE STEM EXTENSION MUST BE USED TO BRING TO A DEPTH OF NO MORE THAN 5'. EXTENSION MUST BE A MINIMUM OF 1" SOLID STOCK.
4) TOTAL VALVE BOX WEIGHT: MINIMUM OF 85 LBS.

CITY OF RALEIGH
DEPARTMENT OF PUBLIC UTILITIES
VALVE BOX INSTALLATION AND EXTENSION DETAIL

DWG. NO.	REVISIONS	DATE	REVISIONS	DATE
W-17	D.W.C.	9-7-99	A.B.B.	4-15-04
	RRH	3-31-00	DHL	8-16-07

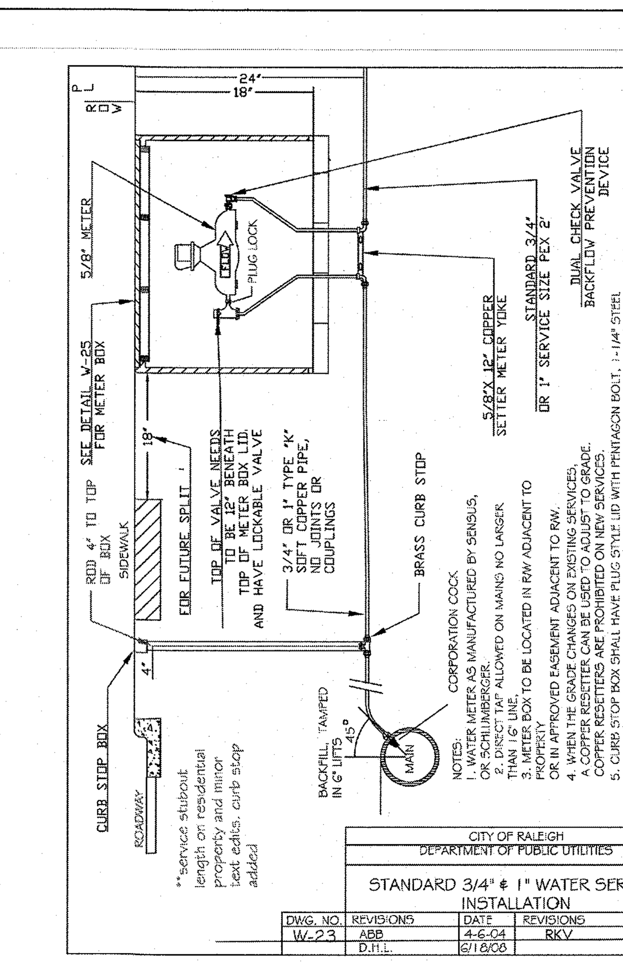

NOTES:
1. WATER METER AS MANUFACTURED BY SENSUS, OR SCHLUMBERGER.
2. DIRECT TAP ALLOWED ON MAINS NO LARGER THAN 16" LINE.
3. METER BOX TO BE LOCATED IN R/W ADJACENT TO PROPERTY OR IN APPROVED EASEMENT ADJACENT TO R/W.
4. WHEN THE GRADE CHANGES ON EXISTING SERVICES, A COPPER RESETTER CAN BE USED TO ADJUST TO GRADE. COPPER RESETTERS ARE PROHIBITED ON NEW SERVICES.
5. CURB STOP BOX SHALL HAVE PLUG STYLE LID WITH PENTAGON BOLT, 1-1/4" STEEL UPPER SECTION, AND ARCH STYLE BASE. STEEL STATIONARY ROD TO BE PROVIDED FOR CURB STOP OPERATION.

CITY OF RALEIGH
DEPARTMENT OF PUBLIC UTILITIES
STANDARD 3/4" & 1" WATER SERVICE INSTALLATION

DWG. NO.	REVISIONS	DATE	REVISIONS	DATE
W-23	ABB	4-6-04	RKV	7/23/13
	D.H.L.	6/18/08		

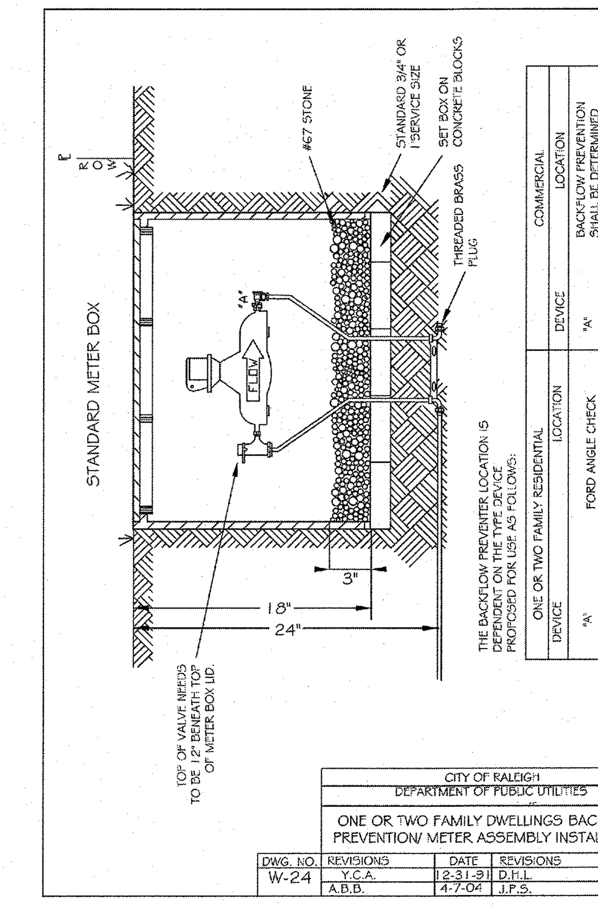

THE BACKFLOW PREVENTER LOCATION IS DEPENDENT ON THE TYPE DEVICE PROPOSED FOR USE AS FOLLOWS:

ONE OR TWO FAMILY RESIDENTIAL		COMMERCIAL	
DEVICE	LOCATION	DEVICE	LOCATION
"A"	FORD ANGLE CHECK OR OTHER APPROVED DUAL CHECK VALVES	"A"	BACKFLOW PREVENTION SHALL BE DETERMINED BY OCCUPANCY & APPROVED BACKFLOW LIST.

CITY OF RALEIGH
DEPARTMENT OF PUBLIC UTILITIES
ONE OR TWO FAMILY DWELLINGS BACKFLOW PREVENTION/ METER ASSEMBLY INSTALLATION

DWG. NO.	REVISIONS	DATE	REVISIONS	DATE
W-24	Y.C.A.	12-31-91	D.H.L.	6/18/08
	A.B.B.	4-7-04	J.P.S.	11/4/10

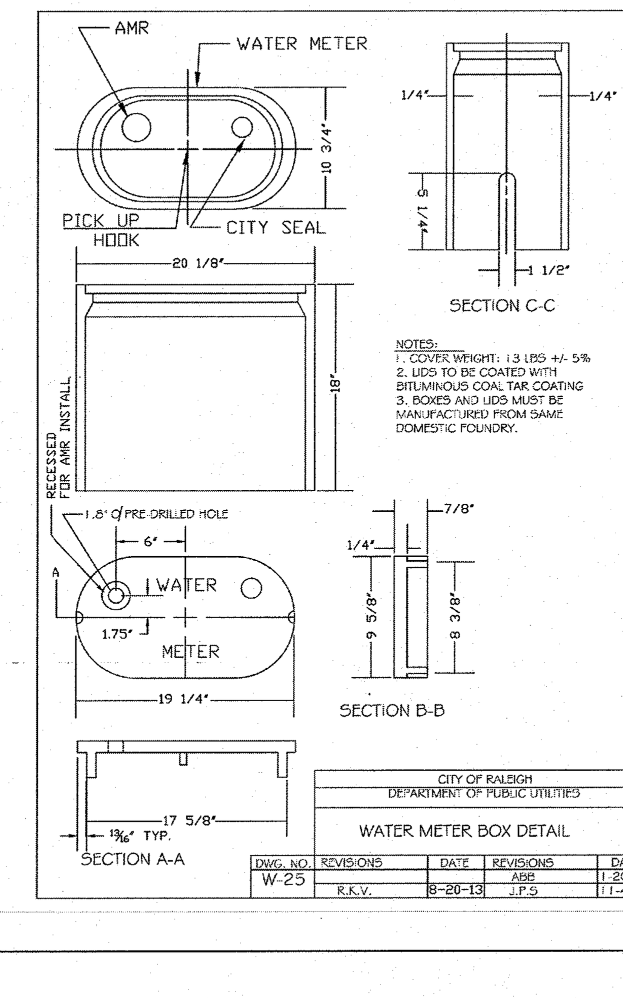

NOTES:
1. COVER WEIGHT: 13 LBS +/- 5%
2. LIDS TO BE COATED WITH BITUMINOUS COAL TAR COATING
3. BOXES AND LIDS MUST BE MANUFACTURED FROM SAME DOMESTIC FOUNDRY.

CITY OF RALEIGH
DEPARTMENT OF PUBLIC UTILITIES
WATER METER BOX DETAIL

DWG. NO.	REVISIONS	DATE	REVISIONS	DATE
W-25			ABB	1-20-05
	R.K.V.	8-20-13	J.P.S.	11-4-10

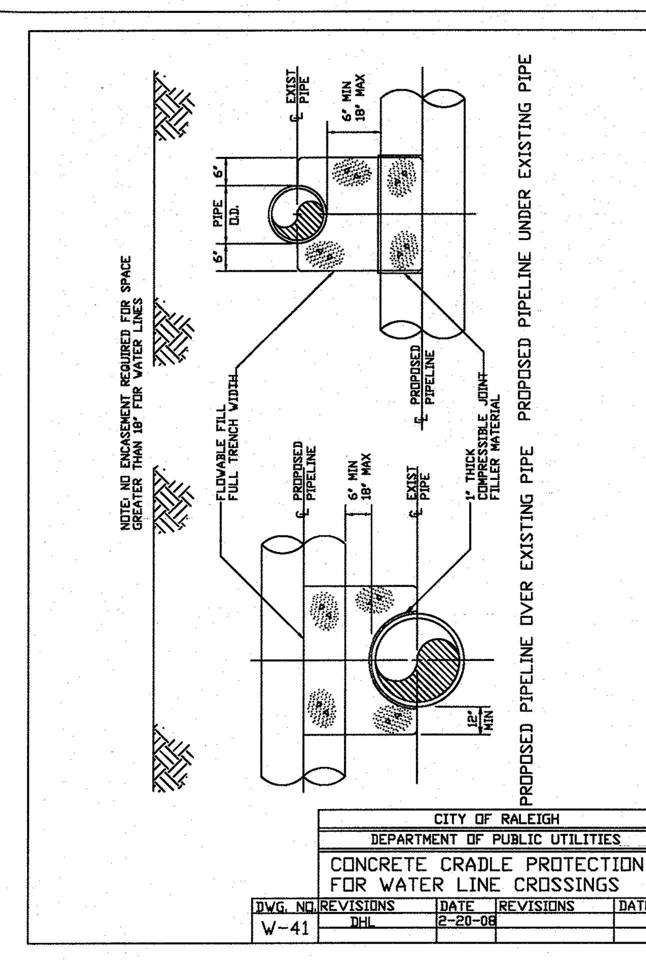

CITY OF RALEIGH
DEPARTMENT OF PUBLIC UTILITIES
CONCRETE CRADLE PROTECTION FOR WATER LINE CROSSINGS

DWG. NO.	REVISIONS	DATE	REVISIONS	DATE
W-41	DHL	2-20-08		

NOTE:
ALL CONSTRUCTION TO BE IN ACCORDANCE WITH ALL TOWN OF ROLESVILLE, CITY OF RALEIGH AND/OR NCDOT STANDARDS AND SPECIFICATIONS

S:\331\40013-Regency_at_Heritage_Revision\DWG\Sheet\CD\ROLESVILLE CD\40013-RL-C7.0-DETAIL SHEETS.dwg | Plotted by Sean Hein

NORTH CAROLINA PROFESSIONAL SEAL 026466 ENGINEER JAMES FILLMORE CHANDLER, JR.

THIS DRAWING PREPARED AT THE
RALEIGH OFFICE
5410 Trinity Road, Suite 102 | Raleigh, NC 27607
TEL 919.866.4951 FAX 919.833.8124 www.timmons.com

YOUR VISION ACHIEVED THROUGH OURS.

DATE	REVISION DESCRIPTION

DATE: 02/04/2020
DRAWN BY: 331
DESIGNED BY: 331
CHECKED BY: JFC
SCALE: NTS

TIMMONS GROUP

NORTH CAROLINA LICENSE NO. C-1652

REGENCY AT HERITAGE - PHASE 3

ROLESVILLE - WAKE COUNTY - NORTH CAROLINA

NOTES & DETAILS

JOB NO. 40013
SHEET NO. C6.3

These plans and associated documents are the exclusive property of TIMMONS GROUP and may not be reproduced in whole or in part and shall not be used for any purpose whatsoever, inclusive, but not limited to construction, bidding, and/or construction staking without the express written consent of TIMMONS GROUP.

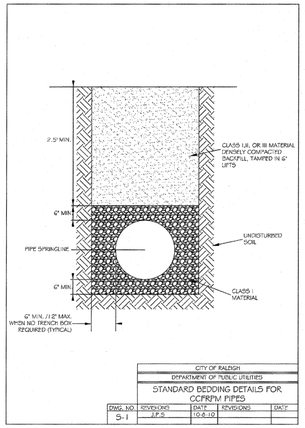

CITY OF RALEIGH
DEPARTMENT OF PUBLIC UTILITIES
STANDARD BEDDING DETAILS FOR CCRFRM PIPES

DWG. NO.	REVISIONS	DATE	REVISIONS	DATE
S-1	J.P.S.	10-8-10		

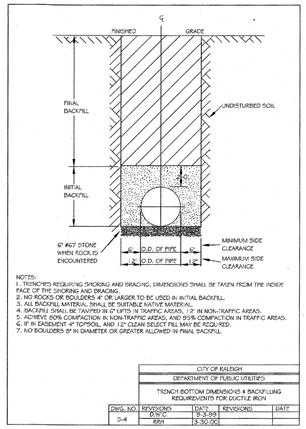

NOTES:
1. TRENCHES REQUIRING SHORING AND BRACING, DIMENSIONS SHALL BE TAKEN FROM THE INSIDE FACE OF THE SHORING AND BRACING.
2. NO ROCKS OR BOULDERS 4" OR LARGER TO BE USED IN INITIAL BACKFILL.
3. ALL BACKFILL MATERIAL SHALL BE SUITABLE NATIVE MATERIAL.
4. BACKFILL SHALL BE TAMPED IN 12" LIFTS IN TRAFFIC AREAS, 12" IN NON-TRAFFIC AREAS.
5. ACHIEVE 90% COMPACTION IN NON-TRAFFIC AREAS, AND 95% COMPACTION IN TRAFFIC AREAS.
6. IF IN EASEMENT #7 TOPSOIL AND 12" CLEAN SELECT FILL MAY BE REQUIRED.
7. NO BOULDERS 8" IN DIAMETER OR GREATER ALLOWED IN FINAL BACKFILL.

CITY OF RALEIGH
DEPARTMENT OF PUBLIC UTILITIES
TRENCH BOTTOM DIMENSIONS FOR CCRFRM PIPE

DWG. NO.	REVISIONS	DATE	REVISIONS	DATE
S-4	D.W.C. RRH	9-3-99 3-30-00		

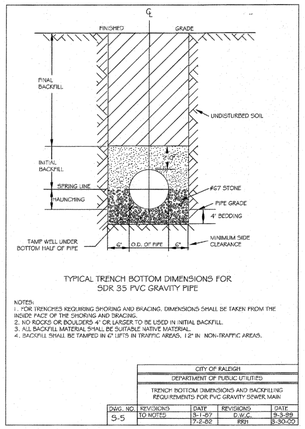

TYPICAL TRENCH BOTTOM DIMENSIONS FOR SDR 35 PVC GRAVITY PIPE

NOTES:
1. FOR TRENCHES REQUIRING SHORING AND BRACING, DIMENSIONS SHALL BE TAKEN FROM THE INSIDE FACE OF THE SHORING AND BRACING.
2. NO ROCKS OR BOULDERS 4" OR LARGER TO BE USED IN INITIAL BACKFILL.
3. ALL BACKFILL MATERIAL SHALL BE SUITABLE NATIVE MATERIAL.
4. BACKFILL SHALL BE TAMPED IN 6" LIFTS IN TRAFFIC AREAS, 12" IN NON-TRAFFIC AREAS.

CITY OF RALEIGH
DEPARTMENT OF PUBLIC UTILITIES
TRENCH BOTTOM DIMENSIONS & BACKFILLING REQUIREMENTS FOR PVC GRAVITY SEWER MAIN

DWG. NO.	REVISIONS	DATE	REVISIONS	DATE
S-5	TO NOTES	5-1-07 7-2-08	D.W.C. RRH	9-3-99 8-30-00

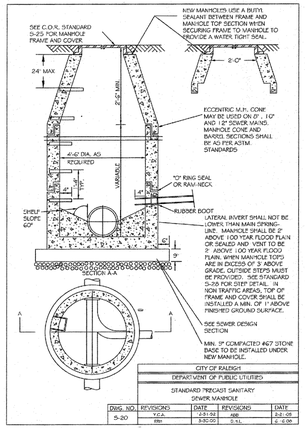

CITY OF RALEIGH
DEPARTMENT OF PUBLIC UTILITIES
STANDARD PRECAST SANITARY SEWER MANHOLE

DWG. NO.	REVISIONS	DATE	REVISIONS	DATE
S-20	Y.C.A. RRH	2-01-99 3-30-00	ABB S.L.	3-01-05 6-6-06

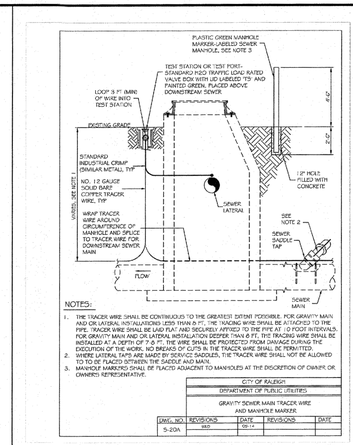

NOTES:
1. THE TRACER WIRE SHALL BE CONTINUOUS TO THE GREATEST EXTENT POSSIBLE. FOR GRAVITY MAIN AND OR LATERAL INSTALLATIONS LESS THAN 8 FT., THE TRACING WIRE SHALL BE ATTACHED TO THE PIPE. TRACER WIRE SHALL BE LAID FLAT AND SECURELY AFFIXED TO THE PIPE AT 10 FOOT INTERVALS. FOR GRAVITY MAIN AND OR LATERAL INSTALLATION DEEPER THAN 8 FT., THE TRACING WIRE SHALL BE INSTALLED AT A DEPTH OF 7-8 FT. THE WIRE SHALL BE PROTECTED FROM DAMAGE DURING THE EXECUTION OF THE WORK. NO BREAKS OF CUTS IN THE TRACER WIRE SHALL BE PERMITTED.
2. WHERE LATERAL TAPS ARE MADE BY SERVICE SADDLES, THE TRACER WIRE SHALL NOT BE ALLOWED TO RE-BY PLACED BETWEEN THE SADDLE AND MAIN.
3. MANHOLE MARKERS SHALL BE PLACED ADJACENT TO MANHOLES AT THE DISCRETION OF OWNER OR OWNERS REPRESENTATIVE.

CITY OF RALEIGH
DEPARTMENT OF PUBLIC UTILITIES
GRAVITY SEWER MAIN TRACER WIRE AND MANHOLE MARKER

DWG. NO.	REVISIONS	DATE	REVISIONS	DATE
S-20A	MED	05-14		

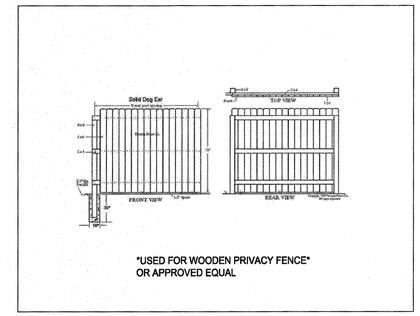

USED FOR WOODEN PRIVACY FENCE
OR APPROVED EQUAL

USED FOR PROTECTIVE FENCE

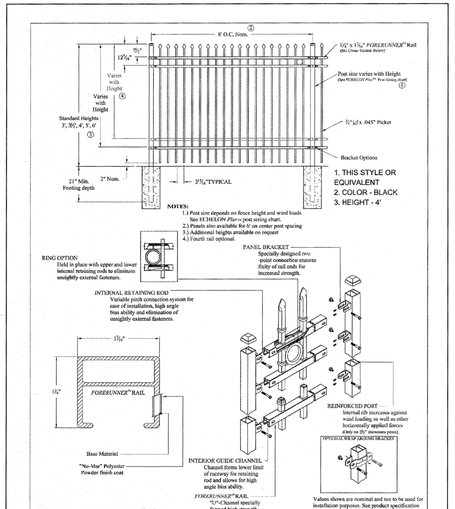

COMMERCIAL STRENGTH ALUMINUM

ECHELON PLUS CLASSIC 3/4-RAIL W/RING OPTION			
DR: CI	SH: 1 of 1	SCALE:	DO NOT SCALE
CK: BS	Date: 11-8-11		REV: e

AMERISTAR®
1555 N. Mingo
Tulsa, OK 74116
1-888-333-3422
www.ameristarfence.com

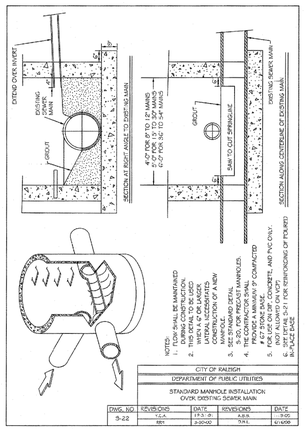

NOTES:
1. FORM SHALL BE MANUFACTURED FOR SPECIFIC PIPE SIZE.
2. THIS DETAIL TO BE USED ONLY WHEN CONNECTING A LATERAL ACCESSIBLE THROUGH THE INTERIOR OF A NEW MANHOLE.
3. SHOULD BE POURED 3" COMPACTED THE CONTRACTOR SHALL 4-6" STONE BASE.
4. USE 3000 PSI CONCRETE, AND PVC ONLY NOT ALLOWED ON HDPE.
5. USE 1:2:4 CONCRETE MIX FOR CONFORMING OF FIGURED IN-PLACE BASE.

CITY OF RALEIGH
DEPARTMENT OF PUBLIC UTILITIES
STANDARD MANHOLE INSTALLATION OVER EXISTING SEWER MAIN

DWG. NO.	REVISIONS	DATE	REVISIONS	DATE
S-22	Y.C.A. RRH	11-1-01 2-20-00	A.B.B. T.H.L.	3-00 10/4/06

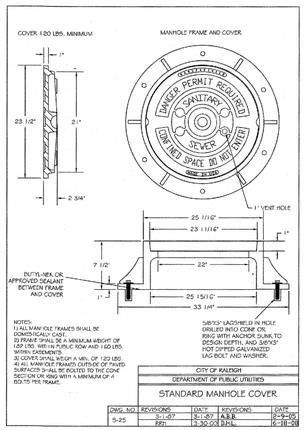

NOTES:
1) ALL MANHOLE FRAMES SHALL BE DOMESTICALLY CAST.
2) COVERS SHALL HAVE A MINIMUM WEIGHT OF 120 LBS. WHEN PUBLIC ROW AND 150 LBS. WITHIN EASEMENTS.
3) COVER SHALL WEIGH A MIN. OF 120 LBS.
4) ALL MANHOLE FRAMES OUTSIDE OF PAVED SURFACES SHALL BE BOLTED TO THE CONE SECTION OR RING WITH A MINIMUM OF 4 BOLTS PER FRAME.

CITY OF RALEIGH
DEPARTMENT OF PUBLIC UTILITIES
STANDARD MANHOLE COVER

DWG. NO.	REVISIONS	DATE	REVISIONS	DATE
S-25	3-1-07 RRH	3-1-07 3-30-00	A.B.B. B.H.L.	2-9-05 6-18-08

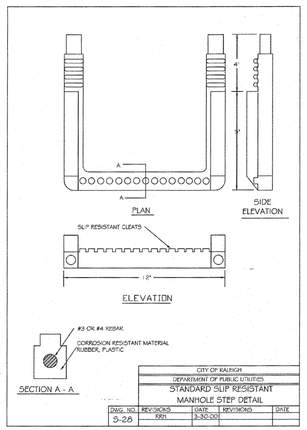

CITY OF RALEIGH
DEPARTMENT OF PUBLIC UTILITIES
STANDARD SLIP RESISTANT MANHOLE STEP DETAIL

DWG. NO.	REVISIONS	DATE	REVISIONS	DATE
S-26	RRH	3-30-00		

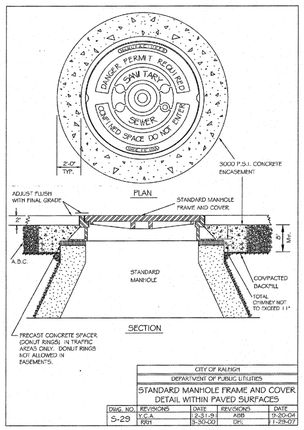

CITY OF RALEIGH
DEPARTMENT OF PUBLIC UTILITIES
STANDARD MANHOLE FRAME AND COVER DETAIL WITHIN PAVED SURFACES

DWG. NO.	REVISIONS	DATE	REVISIONS	DATE
S-29	Y.C.A. RRH	2-31-01 3-30-00	ABB DPL	12-20-04 1-29-07

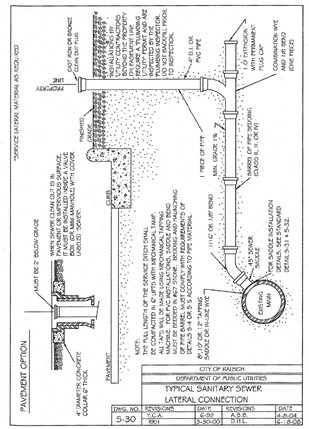

CITY OF RALEIGH
DEPARTMENT OF PUBLIC UTILITIES
TYPICAL SANITARY SEWER LATERAL CONNECTION

DWG. NO.	REVISIONS	DATE	REVISIONS	DATE
S-30	Y.C.A. RRH	6-99 3-30-00	A.B.B. D.H.L.	4-9-04 6-8-06

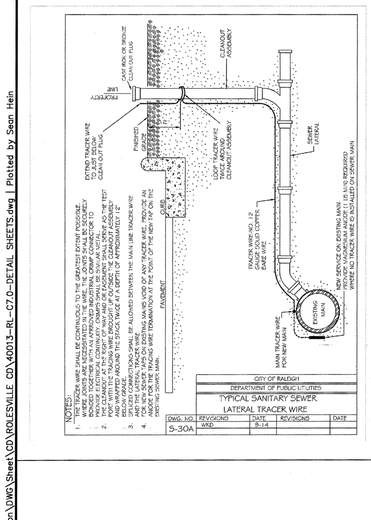

NOTES:
1. THE TRACER WIRE SHALL BE CONTINUOUS TO THE GREATEST EXTENT POSSIBLE. FOR GRAVITY MAIN AND OR LATERAL INSTALLATIONS LESS THAN 8 FT., THE TRACING WIRE SHALL BE ATTACHED TO THE PIPE. TRACER WIRE SHALL BE LAID FLAT AND SECURELY AFFIXED TO THE PIPE AT 10 FOOT INTERVALS. FOR GRAVITY MAIN AND OR LATERAL INSTALLATION DEEPER THAN 8 FT. THE TRACING WIRE SHALL BE INSTALLED AT A DEPTH OF 7-8 FT. THE WIRE SHALL BE PROTECTED FROM DAMAGE DURING THE EXECUTION OF THE WORK. NO BREAKS OF CUTS IN THE TRACER WIRE SHALL BE PERMITTED.
2. WHERE LATERAL TAPS ARE MADE BY SERVICE SADDLES, THE TRACER WIRE SHALL NOT BE ALLOWED TO RE-BY PLACED BETWEEN THE SADDLE AND MAIN.
3. MANHOLE MARKERS SHALL BE PLACED ADJACENT TO MANHOLES AT THE DISCRETION OF OWNER OR OWNERS REPRESENTATIVE.
4. ALL CONNECTIONS SHALL BE MADE WITHOUT DAMAGE TO THE MAIN LINE TRACER WIRE.
5. SPLICES CONNECTIONS SHALL BE ALLOWED BETWEEN THE MAIN LINE TRACER WIRE AND THE SERVICE LATERAL.
6. FOR NEW SERVICE TAPS ON EXISTING MAINS, VOID OF ANY TRACER WIRE, PROVIDE AN 18 GAUGE SOLID COPPER TRACER WIRE TAPED TO THE TOP OF THE PIPE OR ADJACENT TO EXISTING SEWER MAIN.

CITY OF RALEIGH
DEPARTMENT OF PUBLIC UTILITIES
TYPICAL SANITARY SEWER LATERAL TRACER WIRE

DWG. NO.	REVISIONS	DATE	REVISIONS	DATE
S-30A	MED	8-14		

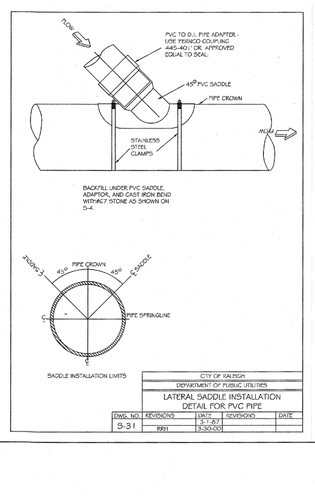

CITY OF RALEIGH
DEPARTMENT OF PUBLIC UTILITIES
LATERAL SADDLE INSTALLATION DETAIL FOR PVC PIPE

DWG. NO.	REVISIONS	DATE	REVISIONS	DATE
S-31	RRH	3-1-07 3-30-00		

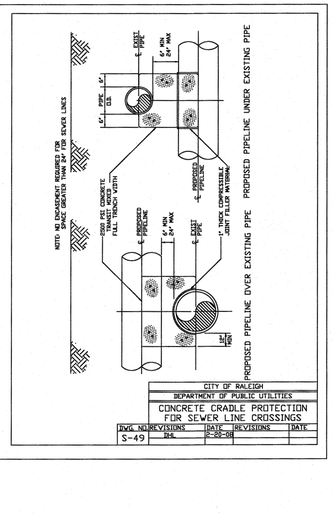

CITY OF RALEIGH
DEPARTMENT OF PUBLIC UTILITIES
CONCRETE CRADLE PROTECTION FOR SEWER LINE CROSSINGS

DWG. NO.	REVISIONS	DATE	REVISIONS	DATE
S-49	R.E.	8-28-08		

NOTE:
ALL CONSTRUCTION TO BE IN ACCORDANCE WITH ALL TOWN OF ROLESVILLE, CITY OF RALEIGH AND/OR NCDOT STANDARDS AND SPECIFICATIONS

THIS DRAWING PREPARED AT THE
RALEIGH OFFICE
5410 Trinity Road, Suite 102 | Raleigh, NC 27607
TEL 919.866.4951 FAX 919.833.8124 www.timmons.com

YOUR VISION ACHIEVED THROUGH OURS.

DATE	REVISION DESCRIPTION

DATE	02/04/2020
DRAWN BY	331
DESIGNED BY	331
CHECKED BY	JFC
SCALE	NTS

TIMMONS GROUP

NORTH CAROLINA LICENSE NO. C-1652

REGENCY AT HERITAGE - PHASE 3

ROLESVILLE - WAKE COUNTY - NORTH CAROLINA

NOTES & DETAILS

JOB NO. 40013

SHEET NO. C6.4

These plans and associated documents are the exclusive property of TIMMONS GROUP and may not be reproduced in whole or in part and shall not be used for any purpose whatsoever, inclusive, but not limited to construction, bidding, and/or construction staking without the express written consent of TIMMONS GROUP.

S:\331\40013-Regency_at_Heritage_Revision\DWG\Sheet\CD\ROLESVILLE CD\40013-RL-C7.0-DETAIL SHEETS.dwg | Plotted by Sean Hein

LEGEND

- LIMITS OF DISTURBANCE
- SF — SILT FENCE
- TPF — TREE PROTECTION FENCE
- TPSF — TREE PROTECTION SILT FENCE
- DD 1-A / DD 1-B — DIVERSION DITCH
- DITCH REINFORCEMENT
- INLET PROTECTION
- SEDIMENT BASIN
- POROUS BAFFLES
- SILT FENCE OUTLET
- SKIMMER
- RIPRAP OR WATTLE CHECK DAM

GROUND STABILIZATION

SITE AREA DESCRIPTION	STABILIZATION TIME FRAME	STABILIZATION TIME FRAME EXCEPTIONS	SITE AREA DESCRIPTION	STABILIZATION TIME FRAME	STABILIZATION TIME FRAME EXCEPTIONS
PERIMETER DIKES, SWALES, DITCHES AND SLOPES	7 DAYS	NONE	SLOPES 3:1 OR FLATTER	14 DAYS	7-DAYS FOR SLOPES GREATER THAN 50 FEET IN LENGTH
HIGH QUALITY WATER (HQW) ZONE	7 DAYS	NONE	ALL OTHER AREAS WITH SLOPES FLATTER THAN 4:1	14 DAYS	NONE (EXCEPT FOR PERIMETERS AND HQW ZONES)
SLOPES STEEPER THAN 3:1	7 DAYS	IF SLOPES ARE 10' OR LESS IN LENGTH AND ARE NOT STEEPER THAN 2:1 14 DAYS ARE ALLOWED	* "EXCEPTIONS OF TIME MAY BE APPROVED BY THE PERMITTING AUTHORITY BASED ON WEATHER OR OTHER SITE-SPECIFIC CONDITIONS THAT MAKE COMPLIANCE IMPRACTICAL ." - (SECTION II.B(2)(b))		

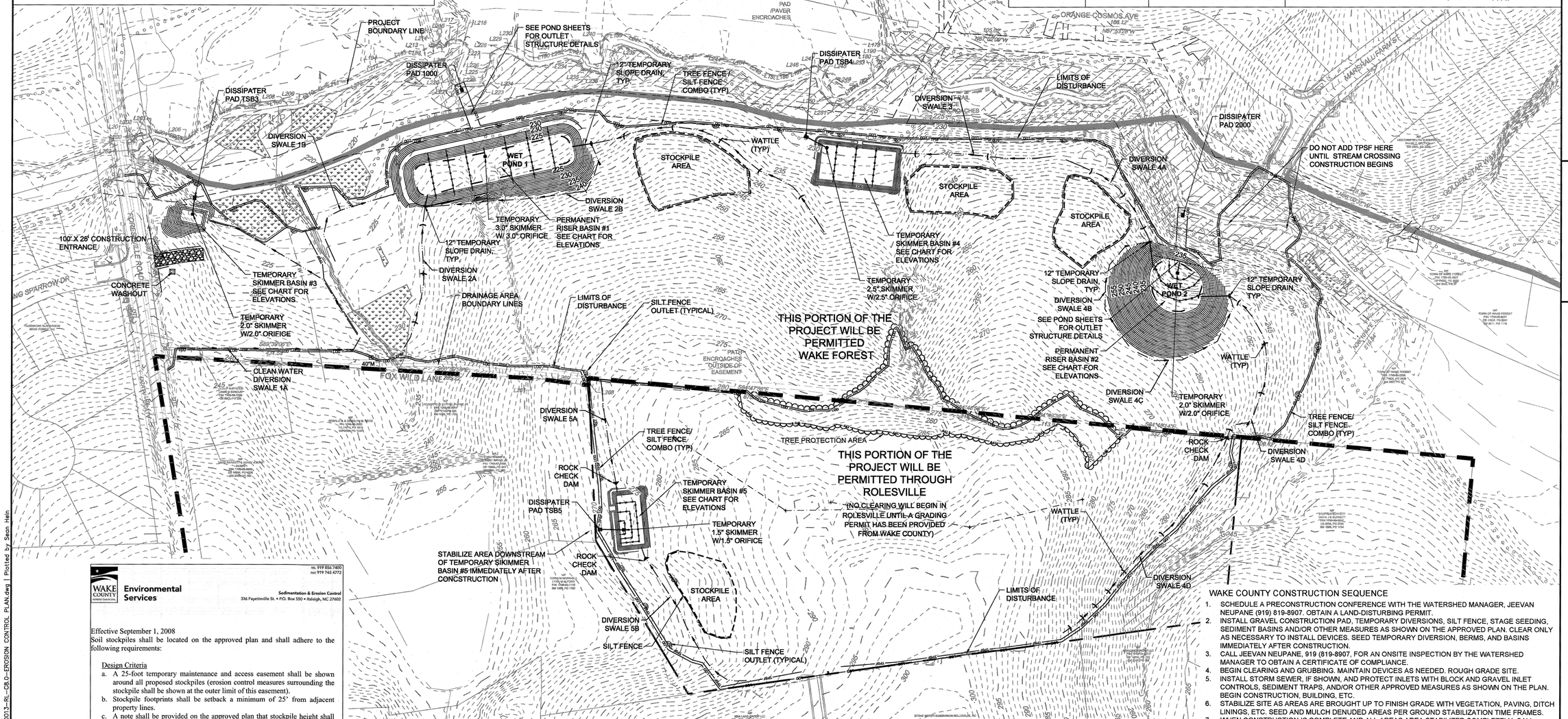

WAKE COUNTY Environmental Services

Sedimentation & Erosion Control
336 Fayetteville St. • P.O. Box 550 • Raleigh, NC 27602
tel. 919 856-7400
fax 919 743-4772

Effective September 1, 2008
Soil stockpiles shall be located on the approved plan and shall adhere to the following requirements:

Design Criteria

a. A 25-foot temporary maintenance and access easement shall be shown around all proposed stockpiles (erosion control measures surrounding the stockpile shall be shown at the outer limit of this easement).
b. Stockpile footprints shall be setback a minimum of 25' from adjacent property lines.
c. A note shall be provided on the approved plan that stockpile height shall not exceed 35 feet.
d. Stockpile slopes shall be 2:1 or flatter.
e. Approved BMPs shall be shown on a plan to control any potential sediment loss from a stockpile.
f. Stockpiling materials adjacent to a ditch, drainageway, watercourse, wetland, stream buffer, or other body of water shall be avoided unless an alternative location is demonstrated to be unavailable.
g. Any concentrated flow likely to affect the stockpile shall be diverted to an approved BMP.
h. Off-site spoil or borrow areas must be in compliance with Wake County UDO and State Regulations. All spoil areas over an acre are required to have an approved sediment control plan. Developer/Contractor shall notify Wake County of any offsite disposal of soil, prior to disposal. Fill of FEMA Floodways and Non-encroachment Areas are prohibited except as otherwise provided by subsection 14-19-2 of the Wake County Unified Development Ordinance (certifications and permits required).

Maintenance Requirements to be Noted on the Plan

i. Seeding or covering stockpiles with tarps or mulch is required and will reduce erosion problems. Tarps should be keyed in at the top of the slope to keep water from running underneath the plastic.
j. If a stockpile is to remain for future use after the project is complete (builders, etc.), the financial responsible party must notify Wake County of a new responsible party for that stockpile.
k. The approved plan shall provide for the use of staged seeding and mulching on a continual basis while the stockpile is in use.
l. Establish and maintain a vegetative buffer at the toe of the slope (where practical).

LEGEND

- 100-YR FLOODPLAIN
- EXISTING WETLANDS
- NEUSE RIVER BUFFER

TEMPORARY DIVERSION DITCHES

DITCH NAME	LENGTH	DA	I (10)	C	Q(10)	N VALUE	UPPER ELEV	LOWER ELEV	AVERAGE SLOPE	VELOCITY	SHEAR	DEPTH	PROTECTION	X-SECT AREA	WET-PER	HYD RADIUS	BOTTOM WIDTH
DS-4D	880	3.72	7.19	0.50	13.4	0.022	281.0	247.0	3.86%	7.02	1.95	0.81	NAG C125	1.97	5.12	0.38	0
DS-5A	230	0.69	7.19	0.50	2.5	0.022	274.0	273.0	0.43%	2.03	0.18	0.65	NAG C125	1.27	4.11	0.31	0
DS-5B	345	2.47	7.19	0.50	8.9	0.022	286.0	275.0	3.19%	5.89	1.43	0.72	NAG C125	1.56	4.55	0.34	0

DISTURBED AREA IN ROLESVILLE IS 12.6 ACRES

(PERMITTED BY WAKE COUNTY)

SEDIMENT BASINS

BASIN ID	DRAINAGE AREA (Pre) (AC)	DRAINAGE AREA (Post) (AC)	DISTURBED AREA (AC)	I(10)	C	Q10 (CFS)	REQUIRED VOLUME (CF)	PROVIDED VOLUME (CF)	BASIN LENGTH (FT)	BASIN WIDTH (FT)	BASIN DEPTH (FT)	SURFACE AREA REQ' (SF)	SURFACE AREA PROVIDED (SF)	WEIR LENGTH (FT)	FLOW DEPTH (FT)	BASIN TYPE	SKIMMER SIZE (IN)	SKIMMER ORFICE(IN)	DEWATER TIME (DAYS)
SEDIMENT BASIN 1	20.00	20.00	20.00	7.19	0.50	71.90	36,000	216,000	360	100	6	23,368	36,000	53	0.59	SKIMMER	3.0	3.00	3
SEDIMENT BASIN 2	7.97	7.97	7.97	7.19	0.50	28.65	14,346	100,750	130	155	5	9,312	20,150	54	0.31	SKIMMER	2.0	2.00	3
SKIMMER BASIN 3	1.75	1.75	1.75	7.19	0.50	6.29	3,150	5,130	36	57	2.5	2,045	2,052	50	0.12	SKIMMER	2.0	2.00	3
SKIMMER BASIN 4	10.14	10.14	10.14	7.19	0.50	36.45	18,252	29,645	77	154	2.5	11,847	11,858	51	0.38	SKIMMER	2.5	2.50	3
SKIMMER BASIN 5	4.45	4.45	4.45	7.19	0.50	16.00	8,010	13,924	59	118	2	5,199	6,962	52	0.22	SKIMMER	3.0	2.75	3

WAKE COUNTY CONSTRUCTION SEQUENCE

1. SCHEDULE A PRECONSTRUCTION CONFERENCE WITH THE WATERSHED MANAGER, JEEVAN NEUPANE (919) 819-8907. OBTAIN A LAND-DISTURBING PERMIT.
2. INSTALL GRAVEL CONSTRUCTION PAD, TEMPORARY DIVERSIONS, SILT FENCE, STAGE SEEDING, SEDIMENT BASINS AND/OR OTHER MEASURES AS SHOWN ON THE APPROVED PLAN. CLEAR ONLY AS NECESSARY TO INSTALL DEVICES. SEED TEMPORARY DIVERSION, BERMS, AND BASINS IMMEDIATELY AFTER CONSTRUCTION.
3. CALL JEEVAN NEUPANE, 919 (819-8907, FOR AN ONSITE INSPECTION BY THE WATERSHED MANAGER TO OBTAIN A CERTIFICATE OF COMPLIANCE.
4. BEGIN CLEARING AND GRUBBING. MAINTAIN DEVICES AS NEEDED. ROUGH GRADE SITE.
5. INSTALL STORM SEWER, IF SHOWN, AND PROTECT INLETS WITH BLOCK AND GRAVEL INLET CONTROLS, SEDIMENT TRAPS, AND/OR OTHER APPROVED MEASURES AS SHOWN ON THE PLAN. BEGIN CONSTRUCTION, BUILDING, ETC.
6. STABILIZE SITE AS AREAS ARE BROUGHT UP TO FINISH GRADE WITH VEGETATION, PAVING, DITCH LININGS, ETC. SEED AND MULCH DENUDED AREAS PER GROUND STABILIZATION TIME FRAMES.
7. WHEN CONSTRUCTION IS COMPLETE AND ALL AREAS AREA STABILIZED COMPLETELY, CALL JEEVAN NEUPANE, (919) 819-8907, FOR AN INSPECTION BY THE WATERSHED MANAGER.
8. IF SITE IS APPROVED, REMOVE TEMPORARY DIVERSIONS, SILT FENCE, SEDIMENT BASINS, ETC., AND SEED OUT OR STABILIZE ANY RESULTING BARE AREAS. ALL REMAINING PERMANENT EROSION CONTROL DEVICES, SUCH AS VELOCITY DISSAPATORS, SHOULD NOW BE INSTALLED.
9. WHEN VEGETATION HAS BECOME ESTABLISHED, CALL FOR A FINAL INSPECTION BY THE WATERSHED MANAGER, JEEVAN NEUPANE (919) 819-8907. OBTAIN A CERTIFICATE OF COMPLETION.

NAD 83

SCALE 1"=100'
0 100' 200'

North Carolina 811 www.nc811.org

THIS DRAWING PREPARED AT THE RALEIGH OFFICE
5410 Trinity Road, Suite 102 | Raleigh, NC 27607
TEL 919.866.4951 FAX 919.833.8124 www.timmons.com

YOUR VISION ACHIEVED THROUGH OURS.

DATE	REVISION DESCRIPTION

DATE	02/04/2020
DRAWN BY	331
DESIGNED BY	331
CHECKED BY	JFC
SCALE	1" = 100'

TIMMONS GROUP

NORTH CAROLINA LICENSE NO. C-1652

REGENCY AT HERITAGE - PHASE 3

ROLESVILLE - WAKE COUNTY - NORTH CAROLINA

STAGE 1 EROSION CONTROL PLAN

JOB NO. 40013

SHEET NO. C7.1

These plans and associated documents are the exclusive property of TIMMONS GROUP and may not be reproduced in whole or in part and shall not be used for any purpose whatsoever, including, but not limited to construction, bidding, and/or construction staking without the express written consent of TIMMONS GROUP.

S:\331\40013-Regency_at_Heritage_Revision\DWG\Sheet\CD\ROLESVILLE CD\40013-RL-C8.0-EROSION CONTROL PLAN.dwg | Plotted by Sean Hein

LEGEND

LIMITS OF DISTURBANCE	INLET PROTECTION
SF — SILT FENCE	SEDIMENT BASIN
TPF — TREE PROTECTION FENCE	POROUS BAFFLES
TPSF — TREE PROTECTION SILT FENCE	SILT FENCE OUTLET
DD 1-A DD 1-B — DIVERSION DITCH	SKIMMER
DITCH REINFORCEMENT	RIPRAP OR WATTLE CHECK DAM

GROUND STABILIZATION

SITE AREA DESCRIPTION	STABILIZATION TIME FRAME	STABILIZATION TIME FRAME EXCEPTIONS	SITE AREA DESCRIPTION	STABILIZATION TIME FRAME	STABILIZATION TIME FRAME EXCEPTIONS
PERIMETER DIKES, SWALES, DITCHES AND SLOPES	7 DAYS	NONE	SLOPES 3:1 OR FLATTER	14 DAYS	7-DAYS FOR SLOPES GREATER THAN 50 FEET IN LENGTH
HIGH QUALITY WATER (HQW) ZONE	7 DAYS	NONE	ALL OTHER AREAS WITH SLOPES FLATTER THAN 4:1	14 DAYS	NONE (EXCEPT FOR PERIMETERS AND HQW ZONES)
SLOPES STEEPER THAN 3:1	7 DAYS	IF SLOPES ARE 10' OR LESS IN LENGTH AND ARE NOT STEEPER THAN 2:1 14 DAYS ARE ALLOWED	* "EXCEPTIONS OF TIME MAY BE APPROVED BY THE PERMITTING AUTHORITY BASED ON WEATHER OR OTHER SITE-SPECIFIC CONDITIONS THAT MAKE COMPLIANCE IMPRACTICAL ." - (SECTION II.B(2)(b))		

BASIN REMOVAL SEQUENCE

1. Schedule a site meeting with the Environmental Engineer/Consultant to determine if a basin can be removed. Install silt fencing or other temporary erosion control measures as needed prior to removal of the basin.
2. Remove Basin(s) and associated temporary diversion ditches. If culvert pipes need to be extended, perform this operation at this time. Fine grade area in preparation for seeding.
3. Perform seedbed preparation, seed, mulch and asphalt tack any resulting bare areas immediately.
4. Install velocity dissipators and/or level spreaders as required on the Erosion Control Plan.
5. When site is fully stabilized, call Environmental Engineer/Consultant for approval of removing remaining temporary erosion control measures and advice on when site can be issued a Certificate of Completion.

Note: A meeting should also be scheduled with the Environmental Engineer/Consultant to determine when a basin may be converted for stormwater use. Some municipalities may also require this.

LEGEND

- 100-YR FLOODPLAIN
- EXISTING WETLANDS
- NEUSE RIVER BUFFER
- EROSION CONTROL BLANKET

DISTURBED AREA IN ROLESVILLE IS 12.6 ACRES

(PERMITTED BY WAKE COUNTY)

SEDIMENT BASINS

BASIN ID	DRAINAGE AREA (Pre) (AC)	DRAINAGE AREA (Post) (AC)	DISTURBED AREA (AC)	I(10)	C	Q10 (CFS)	REQUIRED VOLUME (CF)	PROVIDED VOLUME (CF)	BASIN LENGTH (FT)	BASIN WIDTH (FT)	BASIN DEPTH (FT)	SURFACE AREA REQ' (SF)	SURFACE AREA PROVIDED (SF)	WEIR LENGTH (FT)	FLOW DEPTH (FT)	BASIN TYPE	SKIMMER SIZE (IN)	SKIMMER ORFICE(IN)	DEWATER TIME (DAYS)
SEDIMENT BASIN 1	20.00	20.00	20.00	7.19	0.50	71.90	36,000	216,000	360	100	6	23,368	36,000	53	0.59	SKIMMER	3.0	3.00	3
SEDIMENT BASIN 2	7.97	7.97	7.97	7.19	0.50	28.65	14,346	100,750	130	155	5	9,312	20,150	54	0.31	SKIMMER	2.0	2.00	3
SKIMMER BASIN 3	1.75	1.75	1.75	7.19	0.50	6.29	3,150	5,130	36	57	2.5	2,045	2,052	50	0.12	SKIMMER	2.0	2.00	3
SKIMMER BASIN 4	10.14	10.14	10.14	7.19	0.50	36.45	18,252	29,645	77	154	2.5	11,847	11,858	51	0.38	SKIMMER	2.5	2.50	3
SKIMMER BASIN 5	4.45	4.45	4.45	7.19	0.50	16.00	8,010	13,924	59	118	2	5,199	6,962	52	0.22	SKIMMER	3.0	2.75	3

NAD 83

SCALE 1"=100'

0 100' 200'

North Carolina 811 www.nc811.org

THIS DRAWING PREPARED AT THE
RALEIGH OFFICE
5410 Trinity Road, Suite 102 | Raleigh, NC 27607
TEL 919.866.4951 FAX 919.833.8124 www.timmons.com

YOUR VISION ACHIEVED THROUGH OURS.

DATE	REVISION DESCRIPTION

DATE	02/04/2020
DRAWN BY	331
DESIGNED BY	331
CHECKED BY	JFC
SCALE	1" = 100'

TIMMONS GROUP

NORTH CAROLINA LICENSE NO. C-1652

REGENCY AT HERITAGE - PHASE 3

ROLESVILLE - WAKE COUNTY - NORTH CAROLINA

STAGE 2 EROSION CONTROL PLAN

JOB NO.	40013
SHEET NO.	C7.2

These plans and associated documents are the exclusive property of TIMMONS GROUP and may not be reproduced in whole or in part and shall not be used for any purpose whatsoever, inclusive, but not limited to construction, building, and/or construction staking without the express written consent of TIMMONS GROUP.

S:\331\40013-Regency_at_Heritage_Revision\DWG\Sheet\CD\ROLESVILLE CD\40013-RL-C8.1-EROSION CONTROL PLAN.dwg | Plotted by Sean Hein

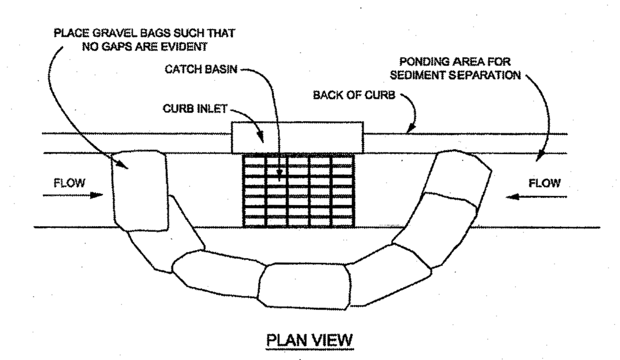

NOTES:

1. PLACE GRAVEL BAG BARRIER ON GENTLY SLOPING STREET, WHERE WATER CAN POND AND ALLOW SEDIMENT TO SEPARATE FROM RUNNOFF.
2. USE SAND BAGS OF WOVEN GEOTEXTILE FABRIC (NOT BURLAP) AND FILL WITH ½ INCH (OR SMALLER) GRAVEL. BAGS MUST BE LAYERED SUCH THAT NO GAPS ARE EVIDENT.
3. INSPECT BARRIERS AND REMOVE SEDIMENT AFTER EACH STORM EVENT, SEDIMENT AND GRAVEL MUST BE REMOVED FROM THE TRAVELED WAY IMMEDIATELY.
4. WHEN INSTALLING CURB INLET PROTECTION DEVICES, **NEVER** BLOCK THE CURB INLET.

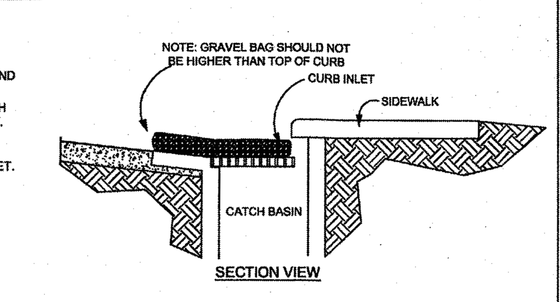

WAKE COUNTY NORTH CAROLINA

EFFECTIVE: 01/31/08

STANDARD GRAVEL BAG CURB INLET PROTECTION

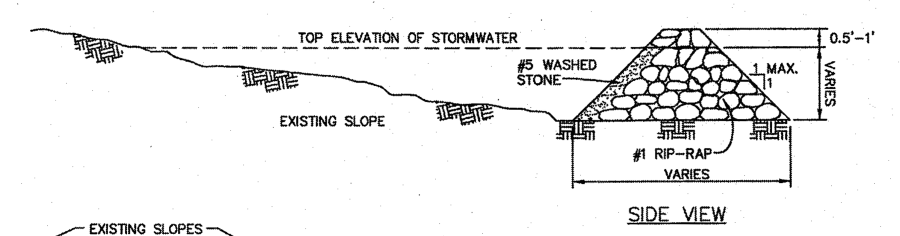

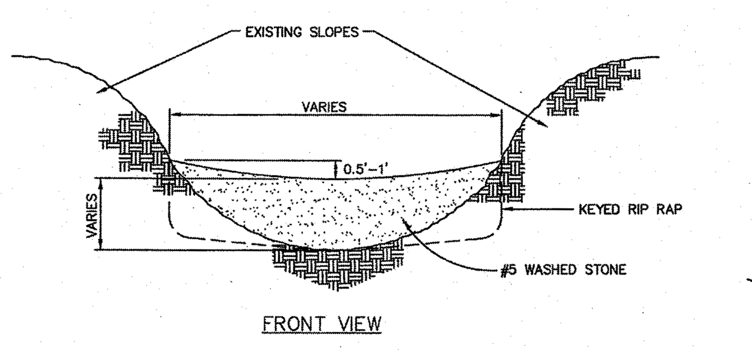

CONSTRUCTION NOTES:

HEIGHT & WIDTH DETERMINED BY EXISTING TOPOGRAPHY AND SEDIMENT STORAGE REQUIRED.

KEY RIP RAP INTO THE DAM FOR STABILIZATION.

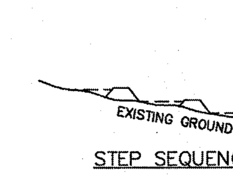

NOTE: REMOVE SEDIMENT ACCUMULATION FROM BEHIND CHECK DAMS TO PREVENT DAMAGE TO CHANNEL VEGETATION. FLOW SHOULD BE MAINTAINED THROUGH THE DAM.

WAKE COUNTY NORTH CAROLINA

EFFECTIVE: 01/31/08

STANDARD CHECK DAM

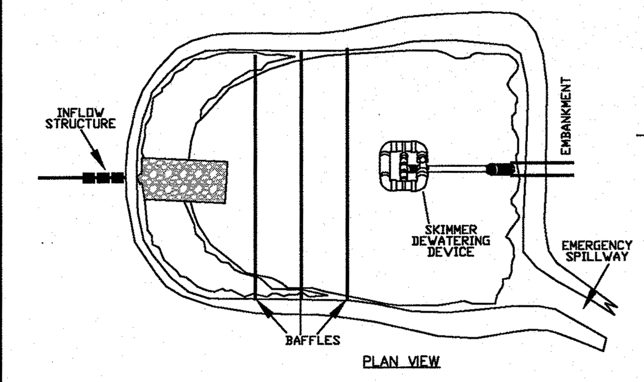

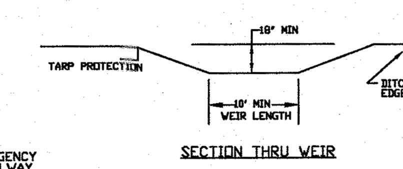

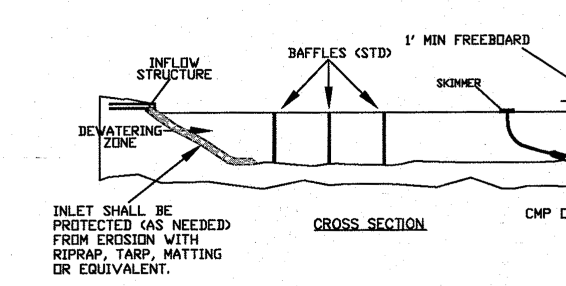

NOTES:
1) BASIN SHOULD BE CLEANED OUT WHEN CAPACITY REACHES AN ELEVATION REPRESENTING THAT THE BASIN IS HALF-FULL.
2) THE TARP USED TO PROTECT THE WEIR SHALL BE THE WIDTH SPECIFIED. THE LENGTH OF THE TARP SHALL BE ACCORDING TO AVAILABLE SUPPLY. IF MULTIPLE TARPS ARE TO BE USED, THEN TARPS SHALL BE OVERLAPPED AT LEAST 12". THE UPSTREAM 12" TARP SHALL OVERLAP THE DOWNSTREAM TARP. THE TARP SHALL BE 50 MIL. HEAVY DUTY SILVER TARPAULINS OR EQUIVALENT FOR U.V. RESISTANCE.
3) PROVIDE A MINIMUM OF THREE POROUS BAFFLES TO EVENLY DISTRIBUTE FLOW ACROSS THE BASIN, REDUCING TURBULENCE.
4) BAFFLE MATERIAL MUST BE SECURED AT THE BOTTOM AND SIDES USING STAPLES OR BY TRENCHING AS FOR A SILT FENCE.
5) MOST OF THE SEDIMENT WILL ACCUMULATE IN THE FIRST BAY, SO THIS SHOULD BE READILY AVAILABLE FOR MAINTENANCE.
6) DURING THE CONSTRUCTION PHASE OF THE PROJECT, PERMANENT STORMWATER RISER SHALL ONLY DEWATER FROM THE TOP OF PIPE.
7) POND SHALL NOT BE CONVERTED FOR STORMWATER USE UNTIL APPROVED BY ENVIRONMENTAL ENGINEER.

WAKE COUNTY NORTH CAROLINA

EFFECTIVE: 01/31/08

STANDARD SKIMMER BASIN

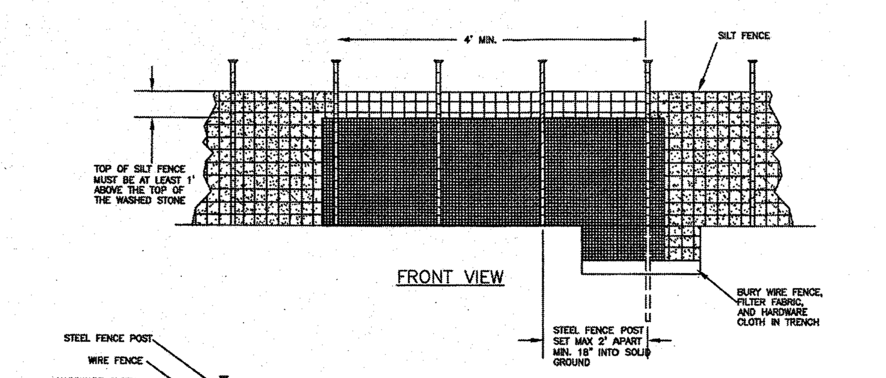

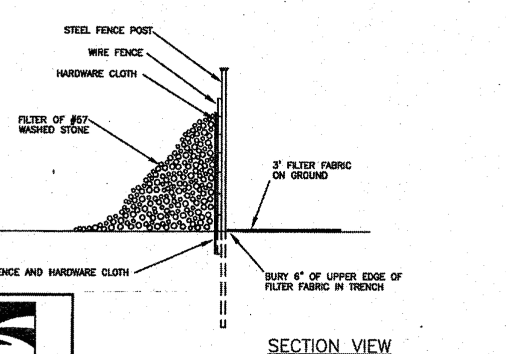

NOTES:
1. REMOVE SEDIMENT WHEN HALF OF STONE OUTLET IS COVERED.
2. REPLACE STONE AS NEEDED TO ENSURE DEWATERING.

WAKE COUNTY NORTH CAROLINA

EFFECTIVE: 01/31/08

STANDARD SILT FENCE OUTLET

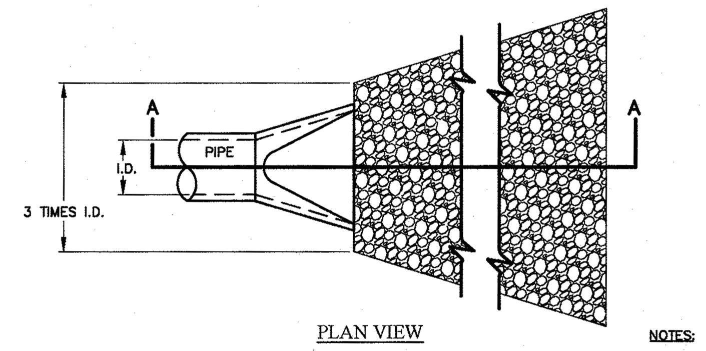

NOTES:

1. L = THE LENGTH OF THE RIPRAP APRON.
2. d = 1.5 TIMES THE MAXIMUM STONE DIAMETER BUT NOT LESS THAN 6" (INCHES).
3. A FILTER BLANKET OR FILTER FABRIC SHOULD BE INSTALLED BETWEEN THE RIPRAP AND SOIL FOUNDATION.

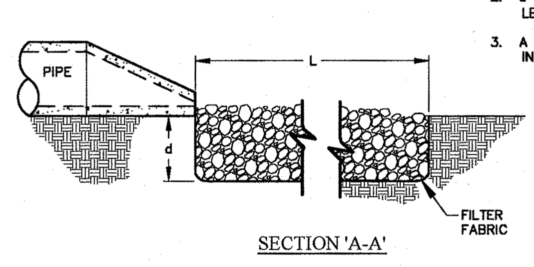

WAKE COUNTY NORTH CAROLINA

EFFECTIVE: 01/31/08

STANDARD PIPE OUTLET TO FLAT AREA
NO WELL-DEFINED CHANNEL

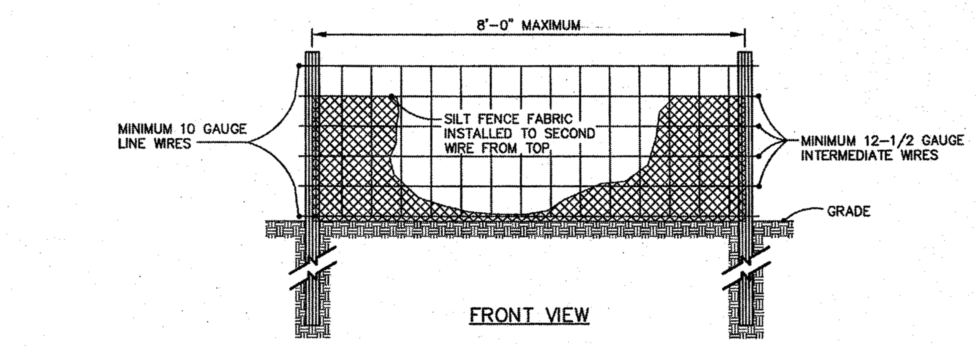

NOTE:

1. USE SILT FENCE ONLY WHEN DRAINAGE AREA DOES NOT EXCEED 1/4 ACRE AND NEVER IN AREAS OF CONCENTRATED FLOW.
2. REMOVE SEDIMENT DEPOSITED AS NEEDED TO PROVIDE STORAGE VOLUME FOR THE NEXT RAIN AND TO REMOVE PRESSURE ON THE SILT FENCE.

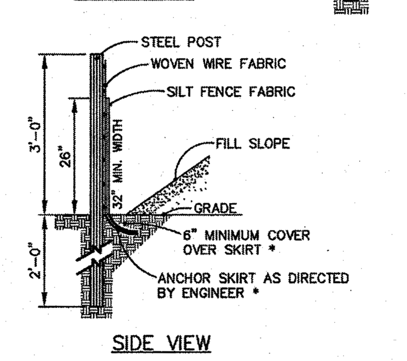

WAKE COUNTY NORTH CAROLINA

EFFECTIVE: 01/31/08

STANDARD TEMPORARY SILT FENCE

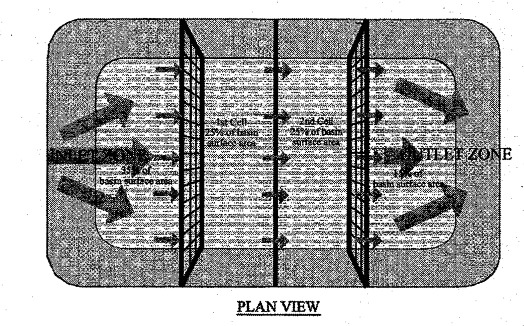

NOTES:
1. BAFFLE MATERIAL SHOULD BE SECURED AT THE BOTTOM AND SIDES USING STAPLES OR BY TRENCHING AS FOR SILT FENCE.
2. MOST OF THE SEDIMENT WILL ACCUMULATE IN THE 1ST BAY, WHICH SHOULD BE READILY ACCESSIBLE FOR MAINTENANCE.
3. PROVIDE 3 BAFFLES (USE TWO IF LESS THAN 20 FEET IN LENGTH). PROVIDE 5 BAFFLES FOR DRAINAGE AREAS GREATER THAN 10 ACRES.
4. BAFFLE SHALL BE 700 G/M2 COIR EROSION BLANKET.
5. TOPS OF BAFFLES SHOULD BE 2 INCHES LOWER THAN THE TOP OF THE BERMS
6. INSPECT BAFFLES FOR REPAIR ONCE A WEEK AND AFTER EACH RAINFALL.

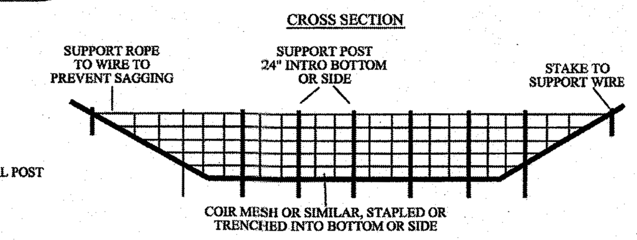

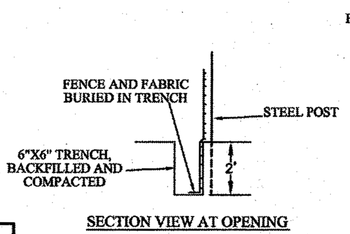

WAKE COUNTY NORTH CAROLINA

EFFECTIVE: 01/31/08

STANDARD BAFFLES DETAIL

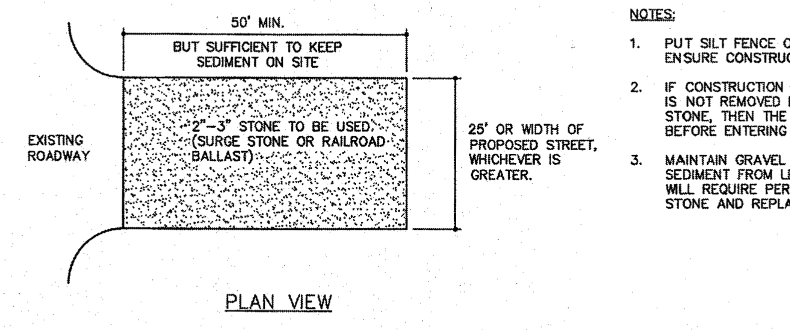

NOTES:

1. PUT SILT FENCE OR TREE PROTECTION FENCE UP TO ENSURE CONSTRUCTION ENTRANCE IS USED.
2. IF CONSTRUCTION ON THE SITES ARE SUCH THAT THE MUD IS NOT REMOVED BY THE VEHICLE TRAVELING OVER THE STONE, THEN THE TIRES OF THE VEHICLES MUST BE WASHED BEFORE ENTERING THE PUBLIC ROAD.
3. MAINTAIN GRAVEL PAD IN A CONDITION TO PREVENT MUD OR SEDIMENT FROM LEAVING CONSTRUCTION SITE. ENTRANCE WILL REQUIRE PERIODIC REMOVAL OF SEDIMENT–LADEN STONE AND REPLACEMENT WITH FRESH STONE.

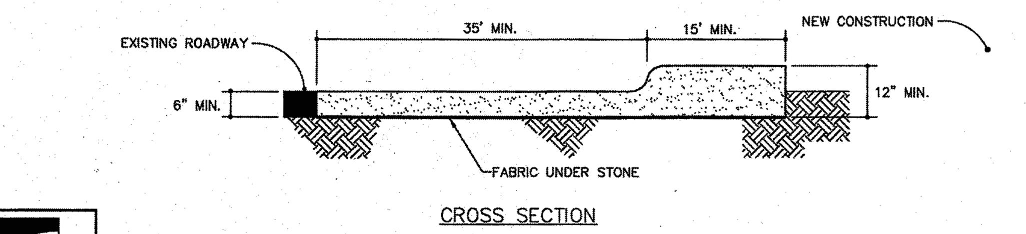

WAKE COUNTY NORTH CAROLINA

EFFECTIVE: 01/31/08

STANDARD CONSTRUCTION ENTRANCE

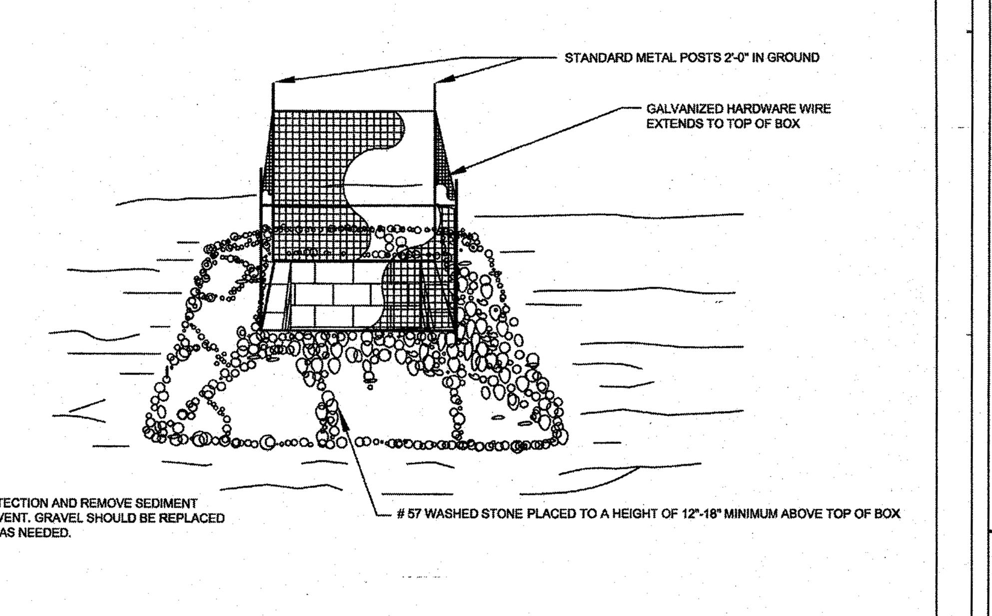

NOTE:

1. INSPECT INLET PROTECTION AND REMOVE SEDIMENT AFTER EACH RAIN EVENT. GRAVEL SHOULD BE REPLACED AND REPAIRS MADE AS NEEDED.

WAKE COUNTY NORTH CAROLINA

EFFECTIVE: 01/31/08

STANDARD GRAVEL YARD INLET PROTECTION

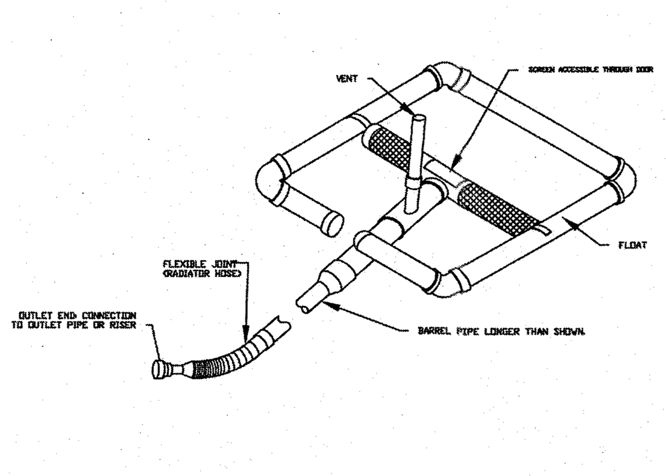

WAKE COUNTY NORTH CAROLINA

EFFECTIVE: 01/31/08

STANDARD SKIMMER DETAIL

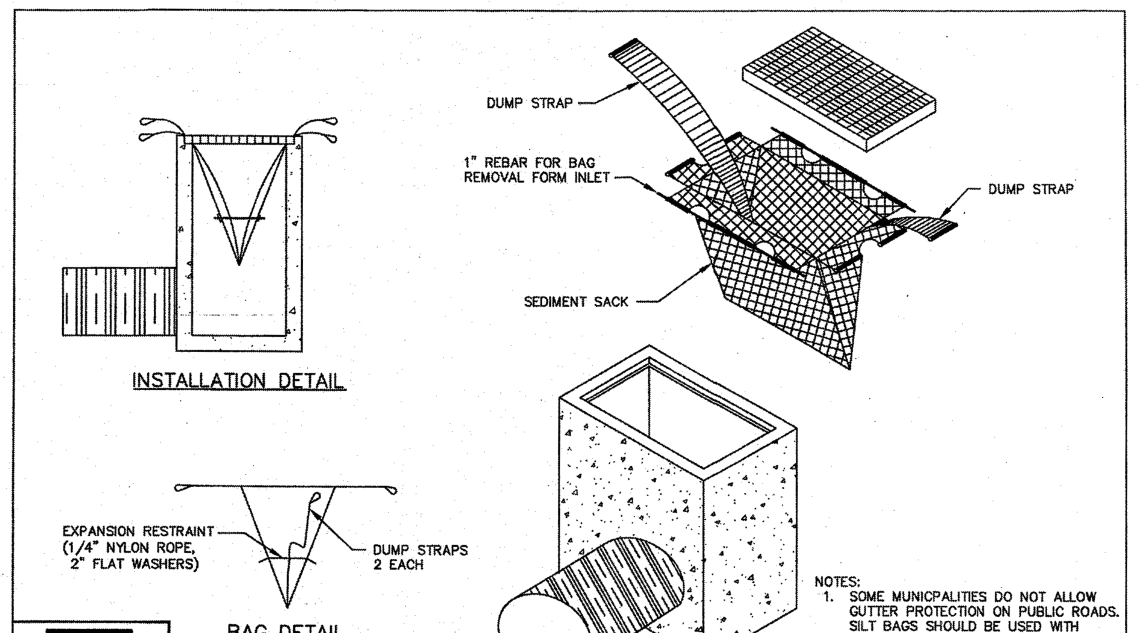

NOTES:
1. SOME MUNICPALITIES DO NOT ALLOW GUTTER PROTECTION ON PUBLIC ROADS. SILT BAGS SHOULD BE USED WITH THESE CASES.
2. BAGS SHOULD BE CLEANED OUT AFTER EVERY RAIN EVENT AND/OR AS NEEDED.

WAKE COUNTY NORTH CAROLINA

EFFECTIVE: 01/31/08

STANDARD SILT BAG - INLET SEDIMENT CONTROL DEVICE

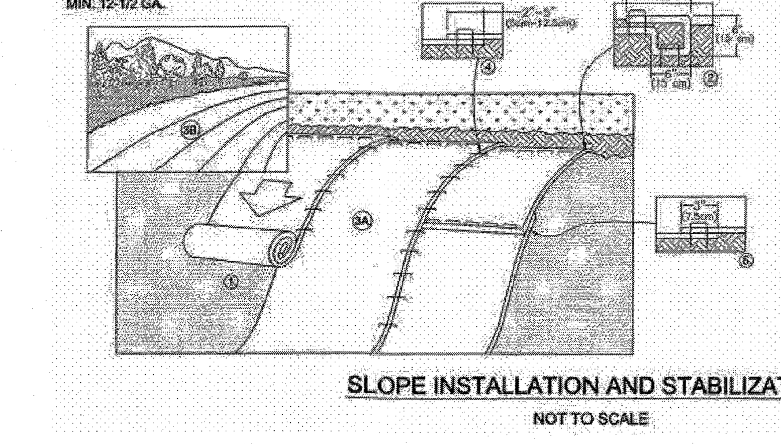

SLOPE INSTALLATION AND STABILIZATION

NOT TO SCALE

1. PREPARE SOIL BEFORE INSTALLING ROLLED EROSION CONTROL PRODUCTS (RECP's), INCLUDING ANY NECESSARY APPLICATION OF LIME, FERTILIZER, AND SEED. WHEN INSTALLING RECP WITH HYDRAMATRICX MULCH, APPLY MULCH PER MULCH DIRECTIONS PRIOR TO RECP INSTALLATION.
2. BEGIN AT THE TOP OF THE SLOPE BY ANCHORING THE RECP's IN A 6" (15 CM) DEEP X 6" (15 CM) WIDE TRENCH WITH APPROXIMATELY 12" (30cm) OF RECP's EXTENDED BEYOND THE UP-SLOPE PORTION OF THE TRENCH. ANCHOR THE RECP's WITH A ROW OF STAPLES/STAKES APPROXIMATELY 12" (30 CM) APART IN THE BOTTOM OF THE TRENCH. BACKFILL AND COMPACT THE TRENCH AFTER STAPLING. APPLY SEED TO COMPACTED SOIL AND FOLD REMAINING 12" (30 CM) PORTION OF RECP's BACK OVER SEED AND COMPACTED SOIL. SECURE RECP's OVER COMPACTED SOIL WITH A ROW OF STAPLES/STAKES SPACED APPROXIMATELY 12" (30 CM) APART ACROSS THE WIDTH OF THE RECP's.
3. ROLL THE RECP's (A.) DOWN OR (B.) HORIZONTALLY ACROSS THE SLOPE. RECP's WILL UNROLL WITH APPROPRIATE SIDE AGAINST THE SOIL SURFACE. ALL RECP's MUST BE SECURELY FASTENED TO SOIL SURFACE BY PLACING STAPLES/STAKES IN APPROPRIATE LOCATIONS AS SHOWN IN THE STAPLE PATTERN GUIDE. WHEN USING THE DOT SYSTEM, STAPLES/STAKES SHOULD BE PLACED THROUGH EACH OF THE COLORED DOTS CORRESPONDING TO THE APPROPRIATE STAPLE PATTERN.
4. THE EDGES OF PARALLEL RECP's MUST BE STAPLED WITH APPROXIMATELY 2" - 5" (5 CM - 12.5 CM) OVERLAP DEPENDING ON RECP's TYPE.
5. CONSECUTIVE RECP's SPLICED DOWN THE SLOPE MUST BE PLACED END OVER END (SHINGLE STYLE) WITH AN APPROXIMATE 3" (7.5 CM) OVERLAP. STAPLE THROUGH OVERLAPPED AREA, APPROXIMATELY 12" (30 CM) APART ACROSS ENTIRE RECP's WIDTH.

NOTE:
*IN LOOSE SOIL CONDITIONS, THE USE OF STAPLE OR STAKE LENGTHS GREATER THAN 6" (15 CM) MAY BE NECESSARY TO PROPERLY SECURE THE RECP's.

MAINTENANCE

INSPECT MATTING ONCE A WEEK AND AFTER EACH RAINFALL. IF WASHOUT, BREAKAGE OR EROSION OCCURS, REPAIR SURFACE, RESEED, REMULCH AND INSTALL NEW NETTING AND ANCHORS AS REQUIRED. CONTINUE INSPECTIONS UNTIL VEGETATION IS FIRMLY ESTABLISHED.

EXISTING GREENWAY TO REMAIN OPEN AT ALL TIMES UNTIL CROSSING IS NECESSARY. WHEN GREENWAY IS TO BE CLOSED, A MINIMUM 72 HOUR NOTIFICATION WILL BE GIVEN TO THE TOWN.

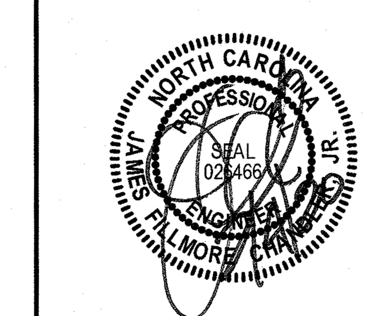

THIS DRAWING PREPARED AT THE
RALEIGH OFFICE
5410 Trinity Road, Suite 102 | Raleigh, NC 27607
TEL 919.866.4951 FAX 919.833.8124 www.timmons.com

YOUR VISION ACHIEVED THROUGH OURS.

REVISION DESCRIPTION	DATE

DATE 02/04/2020

DRAWN BY 331

DESIGNED BY 331

CHECKED BY JFC

SCALE NTS

TIMMONS GROUP

NORTH CAROLINA LICENSE NO. C-1652

REGENCY AT HERITAGE - PHASE 3

ROLESVILLE - WAKE COUNTY - NORTH CAROLINA

EROSION CONTROL NOTES & DETAILS

JOB NO. 40013

SHEET NO. C7.3

These plans and associated documents are the exclusive property of TIMMONS GROUP and may not be reproduced in whole or in part and shall not be used for any purpose whatsoever, inclusive, but not limited to construction, bidding, and/or construction staking without the express written consent of TIMMONS GROUP.

S:\331\40013-Regency_at_Heritage_Revision\DWG\Sheet\CD\ROLESVILLE CD\40013-RL-C8.0-EROSION CONTROL PLAN.dwg | Plotted by Sean Hein

SILT / SEDIMENT FENCE

MATERIALS

1. USE A SYNTHETIC FILTER FABRIC OF AT LEAST 95% BY WEIGHT OF POLYOLEFINS OR POLYESTER. WHICH IS CERTIFIED BY THE MANUFACTURER OR SUPPLIER AS CONFORMING TO THE REQUIREMENTS IN ASTM D 646 1. WHICH IS SHOWN IN PART IN TABLE 6.62B. SYNTHETIC FILTER FABRIC SHOULD CONTAIN ULTRAVIOLET RAY INHIBITORS AND STABILIZERS TO PROVIDE A MINIMUM OF 6 MONTHS OF EXPECTED USABLE CONSTRUCTION LIFE AT A TEMPERATURE RANGE OF 0 TO 1200 F.
2. ENSURE THAT POSTS FOR SEDIMENT FENCES ARC 1.25 LB / LINEAR FT MINIMUM STEEL WITH A MINIMUM LENGTH OF 5 FEET. MAKE SURE THAT STEEL POSTS HAVE PROJECTIONS TO FACILITATE FASTENING THE FABRIC.
3. FOR REINFORCEMENT OF STANDARD STRENGTH FILTER FABRIC, USE WIRE FENCE WITH A MINIMUM 14 GAUGE AND A MAXIMUM MESH SPACING OF 6 INCHES.

CONSTRUCTION

1. CONSTRUCT THE SEDIMENT BARRIER OF STANDARD STRENGTH OR EXTRA STRENGTH SYNTHETIC FILTER FABRICS,
2. ENSURE THAT THE HEIGHT OF THE SEDIMENT FENCE DOCS NOT EXCEED 24 INCHES ABOVE THE GROUND SURFACE, (HIGHER FENCES MAY IMPOUND VOLUMES OF WATER SUFFICIENT TO CAUSE FAILURE OF THE STRUCTURE .)
3. CONSTRUCT THE FILTER FABRIC FROM A CONTINUOUS ROLL CUT TO THE LENGTH OF THE BARRIER TO AVOID JOINTS. WHEN JOINTS ARC NECESSARY, SECURELY FASTEN THE FILTER CLOTH ONLY AT A SUPPORT POST WITH 4 FEET MINIMUM OVERLAP TO THE NEXT POST.
4. SUPPORT STANDARD STRENGTH FILTER FABRIC BY WIRE MESH FASTENED SECURELY TO THE UPSLOPE SIDE OF THE POSTS. EXTEND THE WIRE MESH SUPPORT TO THE BOTTOM OF THE TRENCH. FASTEN THE WIRE REINFORCEMENT. THEN FABRIC ON THE UPSLOPE SIDE OF THE FENCE POST. WIRE OR PLASTIC ZIP TICS SHOULD HAVE MINIMUM 50 POUND TENSILE STRENGTH.
5. WHEN A WIRE MESH SUPPORT FENCE IS USED. SPACE POSTS A MAXIMUM OF 8 FEET APART. SUPPORT POSTS SHOULD BE DRIVEN SECURELY INTO THE GROUND A MINIMUM OF 24 INCHES.
6. EXTRA STRENGTH FILTER FABRIC WITH 6 FEET POST SPACING DOCS NOT REQUIRE WIRE MESH SUPPORT FENCE. SECURELY FASTEN THE FILTER FABRIC DIRECTLY TO POSTS. WIRE OR PLASTIC ZIP TICS SHOULD HAVE MINIMUM 50 POUND TENSILE STRENGTH.
7. EXCAVATE A TRENCH APPROXIMATELY 4 INCHES WIDE AMI XINDIES DEEP ALONG THE PROPOSED LINE OR POSTS AND UPSLOPE FROM THE BARRIER (FIGURE 6.62A).
8. PLACE 12 INCHES OF THE FABRIC ALONG THE BOTTOM AND SIDE OF THE TRENCH.
9. BACKFILLTHE TRENCH WITH SOIL PLACED OVER THE FILTER FABRIC AND COMPACT. THOROUGH COMPACTION OF THE BACKFILL IS CRITICAL TO THE SILT FENCE PERFORMANCE.
10. DO NOT ATTACH FILTER FABRIC TO EXISTING TREES.

SEDIMENT FENCE INSTALLATION USING THE SLICING METHOD

INSTEAD OF EXCAVATING A TRENCH, PLACING FABRIC AND THEN BACKFILLING TRENCH, SEDIMENT FENCE MAY BE INSTALLED USING SPECIALLY DESIGNED EQUIPMENT THAT INSERTS THE FABRIC INTO A CUT SLICED IN THE GROUND WITH A DISC (FIGURE 6.62B).

1. THE BASE OF BOTH END POSTS SHOULD BE AT LEAST ONE FOOT HIGHER THAN THE MIDDLE OF THE FENCE. CHECK WITH A LEVEL IF NECESSARY.
2. INSTALL POSTS 4 FEET APART IN CRITICAL AREAS AND 6 FEET APART ON STANDARD APPLICATIONS.
3. INSTALL POSTS 2 FEET DEEP ON THE DOWNSTREAM SIDE OF THE SILT FENCE, AND AS CLOSE AS POSSIBLE TO THE FABRIC, ENABLING POSTS TO SUPPORT THE FABRIC FROM UPSTREAM WATER PRESSURE.
4. INSTALL POSTS WITH NIPPLES FACING AWAY FROM THE SILT FABRIC.
5. ATTACH THE FABRIC TO EACH POST WITH THREE TICS, ALL SPACED WITHIN THE TOP 8 INCHES OF THE FABRIC . ATTACH EACH TIE DIAGONALLY 45 DEGREES THROUGH THE FABRIC, WITH EACH PUNCTURE AT LEAST 1 INCH VERTICALLY APART. ALSO, EACH TIE SHOULD BE POSITIONED TO HANG ON A POST NIPPLE WHEN TIGHTENED TO PREVENT SAGGING.
6. WRAP APPROXIMATELY 6 INCHES OF FABRIC AROUND THE END POSTS AND SECURE WITH 3 TIES.
7. NO MORE THAN 24 INCHES OF A 36 INCH FABRIC IS ALLOWED ABOVE GROUND LEVEL.
8. THE INSTALLATION SHOULD BE CHECKED AND CORRECTED FOR ANY DEVIATIONS BEFORE COMPACTION.
9. COMPACTION IS VITALLY IMPORTANT FOR EFFECTIVE RESULTS. COMPACT THE SOIL IMMEDIATELY NEXT TO THE SILT FENCE FABRIC WITH THE FRONT WHEEL OF THE TRACTOR, SKID STEER, OR ROLLER EXERTING AT LEAST 60 POUNDS PER SQUARE INCH. COMPACT THE UPSTREAM SIDE FIRST, AND THEN EACH SIDE TWICE FOR A TOTAL OF 4 TRIPS.

MAINTENANCE

INSPECT SEDIMENT FENCES AT LEAST ONCE A WEEK AND AFTER EACH RAINFALL. MAKE ANY REQUIRED REPAIRS IMMEDIATELY.

SHOULD THE FABRIC OF A SEDIMENT FENCE COLLAPSE, TEAR DECOMPOSE OR BECOME INEFFECTIVE, REPLACE IT PROMPTLY.

REMOVED SEDIMENT DEPOSITS AS NECESSARY TO PROVIDE ADEQUATE STORAGE VOLUME FOR THE NEXT RAIN AND TO REDUCE PRESSURE ON THE FENCE. TAKE CARE TO AVOID UNDERMINING THE FENCE DURING CLEANOUT.

REMOVE ALL FENCING MATERIALS AND UNSTABLE SEDIMENT DEPOSITS AND BRING THE AREA TO GRADE AND STABILIZE IT AFTER THE CONTRIBUTING DRAINAGE AREA HAS BEEN PROPERLY STABILIZED.

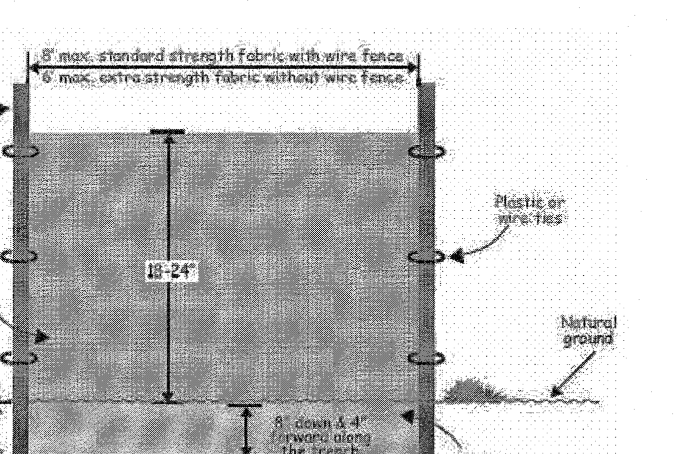

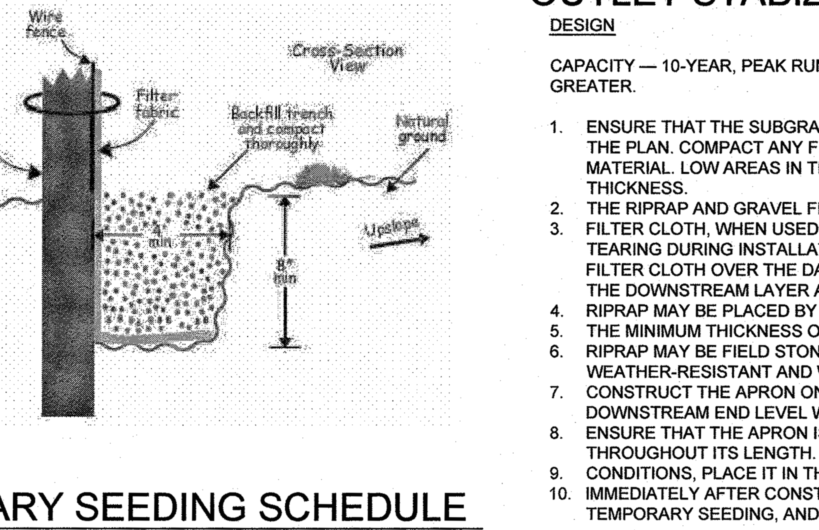

TEMPORARY SEEDING SCHEDULE

WINTER / EARLY SPRING

Seeding mixture

Species	Rate (lb/acre)
Rye (grain)	120
Annual lespedeza (Kobe in Piedmont and Coastal Plain, Korean in Mountains)	50

Omit annual lespedeza when duration of temporary cover is not to extend beyond June.

Seeding dates
Mountains—Above 2500 feet: Feb. 15 - May 15
Below 2500 feet: Feb. 1- May 1
Piedmont—Jan. 1 - May 1
Coastal Plain—Dec. 1 - Apr. 15

Soil amendments
Follow recommendations of soil tests or apply 2,000 lb/acre ground agricultural limestone and 750 lb/acre 10-10-10 fertilizer.

Mulch
Apply 4,000 lb/acre straw. Anchor straw by tacking with asphalt, netting, or a mulch anchoring tool. A disk with blades set nearly straight can be used as a mulch anchoring tool.

Maintenance
Refertilize if growth is not fully adequate. Reseed, refertilize and mulch immediately following erosion or other damage.

FALL

Seeding mixture

Species	Rate (lb/acre)
Rye (grain)	120

Seeding dates
Mountains—Aug. 15 - Dec. 15
Coastal Plain and Piedmont—Aug. 15 - Dec. 30

Soil amendments
Follow soil tests or apply 2,000 lb/acre ground agricultural limestone and 1,000 lb/acre 10-10-10 fertilizer.

Mulch
Apply 4,000 lb/acre straw. Anchor straw by tacking with asphalt, netting, or a mulch anchoring tool. A disk with blades set nearly straight can be used as a mulch anchoring tool.

Maintenance
Repair and refertilize damaged areas immediately. Topdress with 50 lb/acre of nitrogen in March. If it is necessary to extent temporary cover beyond June 15, overseed with 50 lb/acre Kobe (Piedmont and Coastal Plain) or Korean (Mountains) lespedeza in late February or early March.

SUMMER

Seeding mixture

Species	Rate (lb/acre)
German millet	40

In the Piedmont and Mountains, a small-stemmed Sudangrass may be substituted at a rate of 50 lb/acre.

Seeding dates
Mountains—May 15 - Aug. 15
Piedmont—May 1 - Aug. 15
Coastal Plain—Apr. 15 - Aug. 15

Soil amendments
Follow recommendations of soil tests or apply 2,000 lb/acre ground agricultural limestone and 750 lb/acre 10-10-10 fertilizer.

Mulch
Apply 4,000 lb/acre straw. Anchor straw by tacking with asphalt, netting, or a mulch anchoring tool. A disk with blades set nearly straight can be used as a mulch anchoring tool.

Maintenance
Refertilize if growth is not fully adequate. Reseed, refertilize and mulch immediately following erosion or other damage.

PERMANENT SEEDING SCHEDULE

Table 6.11l: Seeding No. 2P for:
Gental Slopes, Average Soil; Low Maintenance

SEEDING MIXTURE

Species 1*	Rate (lb/acre)
Tall Fescue	80
Sericea Lespedeza	20
Kobe Lespedeza	10

SEEDING NOTES
1. After Aug. 1, use unscarified seed for sericea seed.
2. Where periodic mowing is planned or a neat appearance is desired, omit sericea and increase Kobe lespedeza to 40 lb/acre.
3. To extend spring seeding dates into June, and 15 lb/acre hulled Bermudagrass. However, after mid-Apr. It is preferable to seed temporary cover.

NURSE PLANTS
Between May 1 and Aug. 15 add 10 lb/acre German millet of 15 lb/acre Sudangrass. Prior to May 1 or After Aug. 15, add 40 lb/acre rye (grain).

SEEDING DATES

	BEST	Possible
Fall:	Aug. 25-Sept. 15	Aug. 20-Oct. 25
Late Winter	Feb. 15- Mar. 21	Feb. 1-Apr. 15

Fall is best for tall fescue and late winter for lespedezas. Overseeding of Kobe lespedeza over fall-seeded tall fescue is very effective.

SOIL AMENDMENTS
Follow soil tests or apply 2 tons/acre ground agricultural limestone (3 tons/acre in clay soils) and 1,000 lb/acre (750 lb/acre for late winter, early spring, and summer) 10-10-10 fertilizer.

MULCH
Apply 4,000 lb/acre straw. Anchor straw by tacking with asphalt, netting, or roving. If crimping with a mulching anchoring tool, apply 2,000 lb/acre of straw, crimp, then apply additional 2,000 lb/acre of straw. Apply tack at a rate of 400 gallons per acre.

MAINTENANCE
Refertilization in the second year unless growth is fully adequate. May be mowed once or twice a year, but mowing is not necessary. Reseed, fertilize, and much damaged areas immediately.

*1 Refer to Appendix 8.02 for botanical names.

TABLE 6.04A		
DEPTH (IN)	PER 1,000 SF	PER AC
1	3.1	134
2	6.2	268
3	9.3	403
4	12.4	536
5	15.5	670
6	18.6	804

SEE NORTH CAROLINA EROSION AND SEDIMENT CONTROL PLANNING AND DESIGN MANUAL FOR ADDTIONAL DETAILS, TABLES AND SPECIFICATIONS REFERENCED WITHIN THESE EROSION CONTROL PLANS.

OUTLET STABIZATION

DESIGN

CAPACITY — 10-YEAR, PEAK RUNOFF OR THE DESIGN DISCHARGE OF THE WATER CONVEYANCE STRUCTURE, WHICHEVER IS GREATER.

1. ENSURE THAT THE SUBGRADE FOR THE FILTER AND RIPRAP FOLLOWS THE REQUIRED LINES AND GRADES SHOWN IN THE PLAN. COMPACT ANY FILL REQUIRED IN THE SUBGRADE TO THE DENSITY OF THE SURROUNDING UNDISTURBED MATERIAL. LOW AREAS IN THE SUBGRADE ON UNDISTURBED SOIL MAY ALSO BE FILLED BY INCREASING THE RIPRAP THICKNESS.
2. THE RIPRAP AND GRAVEL FILTER MUST CONFORM TO THE SPECIFIED GRADING LIMITS SHOWN ON THE PLANS.
3. FILTER CLOTH, WHEN USED, MUST MEET DESIGN REQUIREMENTS AND BE PROPERLY PROTECTED FROM PUNCHING OR TEARING DURING INSTALLATION. REPAIR ANY DAMAGE BY REMOVING THE RIPRAP AND PLACING ANOTHER PIECE OF FILTER CLOTH OVER THE DAMAGED AREA. ALL CONNECTING JOINTS SHOULD OVERLAP SO THE TOP LAYER IS ABOVE THE DOWNSTREAM LAYER A MINIMUM OF 1 FOOT. IF THE DAMAGE IS EXTENSIVE, REPLACE THE ENTIRE FILTER CLOTH.
4. RIPRAP MAY BE PLACED BY EQUIPMENT, BUT TAKE CARE TO AVOID DAMAGING THE FILTER.
5. THE MINIMUM THICKNESS OF THE RIPRAP SHOULD BE 1.5 TIMES THE MAXIMUM STONE DIAMETER.
6. RIPRAP MAY BE FIELD STONE OR ROUGH QUARRY STONE. IT SHOULD BE HARD, ANGULAR, HIGHLY WEATHER-RESISTANT AND WELL GRADED.
7. CONSTRUCT THE APRON ON ZERO GRADE WITH NO OVERFILL AT THE END. MAKE THE TOP OF THE RIPRAP AT THE DOWNSTREAM END LEVEL WITH THE RECEIVING AREA OR SLIGHTLY BELOW IT.
8. ENSURE THAT THE APRON IS PROPERLY ALIGNED WITH THE RECEIVING STREAM AND PREFERABLY STRAIGHT THROUGHOUT ITS LENGTH. IF A CURVE IS NEEDED TO FIT SITE
9. CONDITIONS, PLACE IT IN THE UPPER SECTION OF THE APRON.
10. IMMEDIATELY AFTER CONSTRUCTION, STABILIZE ALL DISTURBED AREAS WITH VEGETATION (PRACTICES 6.10, TEMPORARY SEEDING, AND 6.11, PERMANENT SEEDING).

MAINTENANCE

INSPECT RIPRAP OUTLET STRUCTURES WEEKLY AND AFTER SIGNIFICANT (1/2 INCH OR GREATER) RAINFALL EVENTS TO SEE IF ANY EROSION AROUND OR BELOW THE RIPRAP HAS TAKEN PLACE, OR IF STONES HAVE BEEN DISLODGED. IMMEDIATELY MAKE ALL NEEDED REPAIRS TO PREVENT FURTHER DAMAGE.

CONSTRUCTION SPECIFICATIONS:

1. CONSTRUCT AND MAINTAIN ALL EROSION AND SEDIMENTATION CONTROL PRACTICES AND MEASURES IN ACCORDANCE WITH THE APPROVED SEDIMENTATION CONTROL PLAN AND CONSTRUCTION SCHEDULE.
2. REMOVE GOOD TOPSOIL FROM AREAS TO BE GRADED AND FILLED, AND PRESERVE IT FOR USE IN FINISHING THE GRADING OF ALL CRITICAL AREAS.
3. SCARIFY AREAS TO BE TOPSOILED TO A MINIMUM DEPTH OF 2 INCHES BEFORE PLACING TOPSOIL (PRACTICE 6.04, TOPSOILING).
4. CLEAR AND GRUB AREAS TO BE FILLED BY REMOVING TREES, VEGETATION, ROOTS, OR OTHER OBJECTIONABLE MATERIAL THAT WOULD AFFECT THE PLANNED STABILITY OF THE FILL.
5. ENSURE THAT FILL MATERIAL IS FREE OF BRUSH, RUBBISH, ROCKS, LOGS, STUMPS, BUILDING DEBRIS, AND OTHER MATERIALS INAPPROPRIATE FOR CONSTRUCTING STABLE FILLS.
6. PLACE ALL FILL IN LAYERS NOT TO EXCEED 9 INCHES IN THICKNESS, AND COMPACT THE LAYERS AS REQUIRED TO REDUCE EROSION, SLIPPAGE, SETTLEMENT, OR OTHER RELATED PROBLEMS.
7. DO NOT INCORPORATE FROZEN, SOFT, MUCKY, OR HIGHLY COMPRESSIBLE MATERIALS INTO FILL SLOPES.
8. DO NOT PLACE FILL ON A FROZEN FOUNDATION, DUE TO POSSIBLE SUBSIDENCE AND SLIPPAGE.
9. KEEP DIVERSIONS AND OTHER WATER CONVEYANCE MEASURES FREE OF SEDIMENT DURING ALL PHASES OF DEVELOPMENT.
10. HANDLE SEEPS OR SPRINGS ENCOUNTERED DURING CONSTRUCTION IN ACCORDANCE WITH APPROVED METHODS (PRACTICE 6.81, SUBSURFACE DRAIN).
11. PERMANENTLY STABILIZE ALL GRADED AREAS IMMEDIATELY AFTER FINAL GRADING IS COMPLETED ON EACH AREA IN THE GRADING PLAN. APPLY TEMPORARY STABILIZATION MEASURES ON ALL GRADED AREAS WHEN WORK IS TO BE INTERRUPTED OR DELAYED FOR 30 WORKING DAYS OR LONGER.
12. SHOW TOPSOIL STOCKPILES, BORROW AREAS, AND SPOIL AREAS ON THE PLANS, AND MAKE SURE THEY ARE ADEQUATELY PROTECTED FROM EROSION. INCLUDE FINAL STABILIZATION OF THESE AREAS IN THE PLAN.

MAINTENANCE

PERIODICALLY, CHECK ALL GRADED AREAS AND THE SUPPORTING EROSION AND SEDIMENTATION CONTROL PRACTICES, ESPECIALLY AFTER HEAVY RAINFALLS. PROMPTLY REMOVE ALL SEDIMENT FROM DIVERSIONS AND OTHER WATER-DISPOSAL PRACTICES. IF WASHOUTS OR BREAKS OCCUR, REPAIR THEM IMMEDIATELY. PROMPT MAINTENANCE OF SMALL ERODED AREAS BEFORE THEY BECOME SIGNIFICANT GULLIES IS AN ESSENTIAL PART OF AN EFFECTIVE EROSION AND SEDIMENTATION CONTROL PLAN.

CONSTRUCTION ENTRANCES

DESIGN

AGGREGATE SIZE — USE 2-3 INCH SURGE STONE OR RAILWAY BALLAST.

DIMENSIONS OF GRAVEL PAD —

THICKNESS:	6 INCHES MINIMUM
WIDTH:	12-FEET MINIMUM OR FULL WIDTH AT ALL POINTS OF THE VEHICULAR ENTRANCE AND EXIT AREA, WHICHEVER IS GREATER
LENGTH:	50-FEET MINIMUM

LOCATION — LOCATE CONSTRUCTION ENTRANCES AND EXITS TO LIMIT SEDIMENT FROM LEAVING THE SITE AND TO PROVIDE FOR MAXIMUM UTILITY BY ALL CONSTRUCTION VEHICLES. AVOID STEEP GRADES, AND ENTRANCES AT CURVES IN PUBLIC ROADS.

WASHING — IF CONDITIONS AT THE SITE ARE SUCH THAT MOST OF THE MUD AND SEDIMENT ARE NOT REMOVED BY VEHICLES TRAVELING OVER THE GRAVEL, THE TIRES SHOULD BE WASHED. WASHING SHOULD BE DONE ON AN AREA STABILIZED WITH CRUSHED STONE THAT DRAINS INTO A SEDIMENT TRAP OR OTHER SUITABLE DISPOSAL AREA. A WASH RACK MAY ALSO BE USED TO MAKE WASHING MORE CONVENIENT AND EFFECTIVE.

CONSTRUCTION SPECIFICATIONS

1. CLEAR THE ENTRANCE AND EXIT AREA OF ALL VEGETATION, ROOTS, AND OTHER OBJECTIONABLE MATERIAL AND PROPERLY GRADE IT.
2. PLACE THE GRAVEL TO THE SPECIFIC GRADE AND DIMENSIONS SHOWN ON THE PLANS, AND SMOOTH IT.
3. PROVIDE DRAINAGE TO CARRY WATER TO A SEDIMENT TRAP OR OTHER SUITABLE OUTLET.
4. USE GEOTEXTILE FABRICS BECAUSE THEY IMPROVE STABILITY OF THE FOUNDATION IN LOCATIONS SUBJECT TO SEEPAGE OR HIGH WATER TABLE.

MAINTENANCE

MAINTAIN THE GRAVEL PAD IN A CONDITION TO PREVENT MUD OR SEDIMENT FROM LEAVING THE CONSTRUCTION SITE. THIS MAY REQUIRE PERIODIC TOP DRESSING WITH 2-INCH STONE. AFTER EACH RAINFALL, INSPECT ANY STRUCTURE USED TO TRAP SEDIMENT AND CLEAN IT OUT AS NECESSARY. IMMEDIATELY REMOVE ALL OBJECTIONABLE MATERIALS SPILLED, WASHED, OR TRACKED ONTO PUBLIC ROADWAYS.

SURFACE ROUGHENING

CUT SLOPE ROUGHENING FOR AREAS NOT TO BE MOWED

STAIR-STEP GRADE OR GROOVE CUT SLOPES WITH A GRADIENT STEEPER THAN 3:1.

USE STAIR-STEP GRADING ON ANY ERODIBLE MATERIAL SOFT ENOUGH TO BE RIPPED WITH A BULLDOZER. SLOPES CONSISTING OF SOFT ROCK WITH SOME SUBSOIL ARE PARTICULARLY SUITED TO STAIR-STEP GRADING.

MAKE THE VERTICAL CUT DISTANCE LESS THAN THE HORIZONTAL DISTANCE, AND SLIGHTLY SLOPE THE HORIZONTAL POSITION OF THE "STEP" IN TOWARD THE VERTICAL WALL.

DO NOT MAKE INDIVIDUAL VERTICAL CUTS MORE THAN 2 FEET IN SOFT MATERIALS OR MORE THAN 3 FEET IN ROCKY MATERIALS.

GROOVING USES MACHINERY TO CREATE A SERIES OF RIDGES AND DEPRESSIONS THAT RUN ACROSS THE SLOPE (ON THE CONTOUR).

GROOVE USING ANY APPROPRIATE IMPLEMENT THAT CAN BE SAFELY OPERATED ON THE SLOPE, SUCH AS DISKS, TILLERS, SPRING HARROWS, OR THE TEETH ON A FRONT-END LOADER BUCKET. DO NOT MAKE SUCH GROOVES LESS THAN 3 INCHES DEEP NOR MORE THAN 15 INCHES APART.

FILL SLOPE ROUGHENING FOR AREAS NOT TO BE MOWED

PLACE FILL SLOPES WITH A GRADIENT STEEPER THAN 3:1 IN LIFTS NOT TO EXCEED 9 INCHES, AND MAKE SURE EACH LIFT IS PROPERLY COMPACTED. ENSURE THAT THE FACE OF THE SLOPE CONSISTS OF LOOSE, UNCOMPACTED FILL 4 TO 6 INCHES DEEP. USE GROOVING, AS DESCRIBED ABOVE, TO ROUGHEN THE FACE OF THE SLOPES, IF NECESSARY.

DO NOT BLADE OR SCRAPE THE FINAL SLOPE FACE.

CUTS, FILLS, AND GRADED AREAS THAT WILL BE MOWED

MAKE MOWED SLOPES NO STEEPER THAN 3:1.

ROUGHEN THESE AREAS TO SHALLOW GROOVES BY NORMAL TILLING, DISKING, HARROWING, OR USE OF CULTIPACKER-SEEDER. MAKE THE FINAL PASS OF ANY SUCH TILLAGE IMPLEMENT ON THE CONTOUR.

MAKE GROOVES, FORMED BY SUCH IMPLEMENTS, CLOSE TOGETHER (LESS THAN 10 INCHES) AND NOT LESS THAN 1 INCH DEEP.

EXCESSIVE ROUGHNESS IS UNDESIRABLE WHERE MOWING IS PLANNED.

ROUGHENING WITH TRACKED MACHINERY

LIMIT ROUGHENING WITH TRACKED MACHINERY TO SANDY SOILS TO AVOID UNDUE COMPACTION OF THE SOIL SURFACE. TRACKING IS GENERALLY NOT AS EFFECTIVE AS THE OTHER ROUGHENING METHODS DESCRIBED.

OPERATE TRACKED MACHINERY UP AND DOWN THE SLOPE TO LEAVE HORIZONTAL DEPRESSIONS IN THE SOIL. DO NOT BACK-BLADE DURING THE FINAL GRADING OPERATION.

SEEDING

IMMEDIATELY SEED AND MULCH ROUGHENED AREAS TO OBTAIN OPTIMUM SEED GERMINATION AND GROWTH.

SEDIMENT BASINS

CONSTRUCTION SPECIFICATIONS

1. SITE PREPARATIONS- CLEAR, GRUB, AND STRIP TOPSOIL FROM AREAS UNDER THE SPECIFICATIONS EMBANKMENT TO REMOVE TREES, VEGETATION, ROOTS, AND OTHER OBJECTIONABLE MATERIAL. DELAY CLEARING THE POOL AREA UNTIL THE DAM IS COMPLETE AND THEN REMOVE BRUSH, TREES, AND OTHER OBJECTIONABLE MATERIALS TO FACILITATE SEDIMENT CLEANOUT. STOCKPILE ALL TOPSOIL OR SOIL CONTAINING ORGANIC MATTER FOR USE ON THE OUTER SHELL OF THE EMBANKMENT TO FACILITATE VEGETATIVE ESTABLISHMENT. PLACE TEMPORARY SEDIMENT CONTROL MEASURES BELOW THE BASIN AS NEEDED.
2. CUT-OFF TRENCH- EXCAVATE A CUT-OFF TRENCH ALONG THE CENTER LINE OF THE EARTH FILL EMBANKMENT. CUT THE TRENCH TO STABLE SOIL MATERIAL, BUT IN NO CASE MAKE IT LESS THAN 2 FEET DEEP. THE CUT-OFF TRENCH MUST EXTEND INTO BOTH ABUTMENTS TO AT LEAST THE ELEVATION OF THE RISER CREST. MAKE THE MINIMUM BOTTOM WIDTH WIDE ENOUGH TO PERMIT OPERATION OF EXCAVATION AND COMPACTION EQUIPMENT, BUT IN NO CASE LESS THAN 2 FEET. MAKE SIDE SLOPES OF THE TRENCH NO STEEPER THAN 1:1. COMPACTION REQUIREMENTS ARE THE SAME AS THOSE FOR THE EMBANKMENT. KEEP THE TRENCH DRY DURING BACKFILLING AND COMPACTION OPERATIONS.
3. EMBANKMENT- TAKE FILL MATERIAL FROM THE APPROVED AREAS SHOWN ON THE PLANS. IT SHOULD BE CLEAN MINERAL SOIL, FREE OF ROOTS, WOODY VEGETATION, ROCKS, AND OTHER OBJECTIONABLE MATERIAL. SCARIFY AREAS ON WHICH FILL IS TO BE PLACED BEFORE PLACING FILL. THE FILL MATERIAL MUST CONTAIN SUFFICIENT MOISTURE SO IT CAN BE FORMED BY HAND INTO A BALL WITHOUT CRUMBLING. IF WATER CAN BE SQUEEZED OUT OF THE BALL, IT IS TOO WET FOR PROPER COMPACTION. PLACE FILL MATERIAL IN 6 TO 8 INCH CONTINUOUS LAYERS OVER THE ENTIRE LENGTH OF THE FILL AREA AND COMPACT IT. COMPACTION MAY BE OBTAINED BY ROUTING THE CONSTRUCTION HAULING EQUIPMENT OVER THE FILL SO THAT THE ENTIRE SURFACE OF EACH LAYER IS TRAVERSED BY AT LEAST ONE WHEEL OR TREAD TRACK OF HEAVY EQUIPMENT, OR A COMPACTOR MAY BE USED. CONSTRUCT THE EMBANKMENT TO AN ELEVATION 10 PERCENT HIGHER THAN THE DESIGN HEIGHT TO ALLOW FOR SETTLING.
4. CONDUIT SPILLWAYS- SECURELY ATTACH THE RISER TO THE BARREL OR BARREL STUB TO MAKE A WATERTIGHT STRUCTURAL CONNECTION. SECURE ALL CONNECTIONS BETWEEN BARREL SECTIONS BY APPROVED WATERTIGHT ASSEMBLIES. PLACE THE BARREL AND RISER ON A FIRM, SMOOTH FOUNDATION OF IMPERVIOUS SOIL. DO NOT USE PERVIOUS MATERIAL SUCH AS SAND, GRAVEL, OR CRUSHED STONE AS BACKFILL AROUND THE PIPE OR ANTI-SEEP COLLARS. PLACE THE FILL MATERIAL AROUND THE PIPE SPILLWAY IN 4-INCH LAYERS, AND COMPACT IT UNDER AND AROUND THE PIPE TO AT LEAST THE SAME DENSITY AS THE ADJACENT EMBANKMENT. CARE MUST BE TAKEN NOT TO RAISE THE PIPE FROM FIRM CONTACT WITH ITS FOUNDATION WHEN COMPACTING UNDER THE PIPE HAUNCHES. PLACE A MINIMUM DEPTH OF 2 FEET OF COMPACTED BACKFILL OVER THE PIPE SPILLWAY BEFORE CROSSING IT WITH CONSTRUCTION EQUIPMENT. ANCHOR THE RISER IN PLACE BY CONCRETE OR OTHER SATISFACTORY MEANS TO PREVENT FLOTATION. IN NO CASE SHOULD THE PIPE CONDUIT BE INSTALLED BY CUTTING A TRENCH THROUGH THE DAM AFTER THE EMBANKMENT IS COMPLETE.
5. EMERGENCY SPILLWAY- INSTALL THE EMERGENCY SPILLWAY IN UNDISTURBED SOIL. THE ACHIEVEMENT OF PLANNED ELEVATIONS, GRADE, DESIGN WIDTH, AND ENTRANCE AND EXIT CHANNEL SLOPES ARE CRITICAL TO THE SUCCESSFUL OPERATION OF THE EMERGENCY SPILLWAY.
6. INLETS- DISCHARGE WATER INTO THE BASIN IN A MANNER TO PREVENT EROSION. USE DIVERSIONS WITH OUTLET PROTECTION TO DIVERT SEDIMENT-LADEN WATER TO THE UPPER END OF THE POOL AREA TO IMPROVE BASIN TRAP EFFICIENCY (REFERENCES: RUNOFF CONTROL MEASURES AND OUTLET PROTECTION).
7. EROSION CONTROL- CONSTRUCT THE STRUCTURE SO THAT THE DISTURBED AREA IS MINIMIZED. DIVERT SURFACE WATER AWAY FROM BARE AREAS. COMPLETE THE EMBANKMENT BEFORE THE AREA IS CLEARED. STABILIZE THE EMERGENCY SPILLWAY EMBANKMENT AND ALL OTHER DISTURBED AREAS ABOVE THE CREST OF THE PRINCIPAL SPILLWAY IMMEDIATELY AFTER CONSTRUCTION (REFERENCES: SURFACE STABILIZATION).
8. INSTALL POROUS BAFFLES AS SPECIFIED IN PRACTICE 6.65, POROUS BAFFLES.
9. SAFETY- SEDIMENT BASINS MAY ATTRACT CHILDREN AND CAN BE DANGEROUS. AVOID STEEP SIDE SLOPES, AND FENCE AND MARK BASINS WITH WARNING SIGNS IF TRESPASSING IS LIKELY. FOLLOW ALL STATE AND LOCAL REQUIREMENTS.

MAINTENANCE

INSPECT TEMPORARY SEDIMENT BASINS AT LEAST WEEKLY AND AFTER EACH SIGNIFICANT (1/2 INCH OR GREATER) RAINFALL EVENT AND REPAIR IMMEDIATELY. REMOVE SEDIMENT AND RESTORE THE BASIN TO ITS ORIGINAL DIMENSIONS WHEN IT ACCUMULATES TO ONE-HALF THE DESIGN DEPTH. PLACE REMOVED SEDIMENT IN AN AREA WITH SEDIMENT CONTROLS. CHECK THE EMBANKMENT, SPILLWAYS, AND OUTLET FOR EROSION DAMAGE, AND INSPECT THE EMBANKMENT FOR PIPING AND SETTLEMENT. MAKE ALL NECESSARY REPAIRS IMMEDIATELY. REMOVE ALL TRASH AND OTHER DEBRIS FROM THE RISER AND POOL AREA.

TREE PROTECTION

1. ERECT TPZ FENCES. RESTRICT ACCESS TO TPZS, WITH TALL, BRIGHT, PROTECTIVE FENCING. MOST FENCING IS INEXPENSIVE AND DURABLE ENOUGH TO LAST THROUGHOUT MOST CONSTRUCTION PROJECTS. TEMPORARY TREE PROTECTION FENCING SHOULD BE ERECTED BEFORE CLEARING, DELIVERIES AND OTHER CONSTRUCTION ACTIVITIES BEGIN ON THE SITE.
2. PROHIBIT OR RESTRICT ACCESS TO TPZS. ALL ON-SITE WORKERS SHOULD BE AWARE OF THE TPZS AND THE RESTRICTIONS ON ACTIVITIES WITHIN THE ZONES. USE THESE TPZ GUIDELINES FOR THE BEST EFFECT:
   • POST "KEEP OUT" SIGNS ON ALL SIDES OF FENCING. DO NOT STORE CONSTRUCTION EQUIPMENT OR MATERIALS IN TPZS.
   • PROHIBIT CONSTRUCTION ACTIVITIES NEAR THE MOST VALUABLE TREES, AND RESTRICT ACTIVITIES AROUND OTHERS.
   • ASSESS CREW AND CONTRACTOR PENALTIES, IF NECESSARY, TO KEEP THE TPZS INTACT.
3. MONITOR TREES. VIGILANCE IS REQUIRED TO PROTECT TREES ON CONSTRUCTION SITES. USE A TREE PROFESSIONAL OR TRAIN YOUR STAFF TO MONITOR TREE HEALTH DURING AND AFTER CONSTRUCTION ON A REGULAR, FREQUENT BASIS. WATCH FOR SIGNS OF TREE STRESS, SUCH AS DIEBACK, LEAF LOSS, OR GENERAL DECLINE IN TREE HEALTH OR APPEARANCE.
4. MONITOR TPZ FENCES. ASSIGN A CREW MEMBER THE WEEKLY RESPONSIBILITY OF CHECKING THE INTEGRITY OF TPZ FENCES. REPAIR AND REPLACE TPZ FENCING AS NEEDED.
5. OPTIMIZE TREE HEALTH. ASSIGN A TRAINED CREW MEMBER OR HIRE A PROFESSIONAL TO COMPLETE REGULAR TREE MAINTENANCE TASKS, INCLUDING WATERING, FERTILIZATION, AND MULCHING TO PROTECT TREE ROOTS. CONSULT A TREE PROFESSIONAL FOR ADVICE ON THESE PRACTICES IF NEEDED. SURVIVAL OF PROTECTED TREES WILL INCREASE IF THESE PRACTICES CONTINUE DURING CONSTRUCTION. HEALTHY TREES REQUIRE UNDISTURBED HEALTHY SOILS. DO NOT CAUSE INJURIES TO TREES AND ROOTS. DO NOT CHANGE THE SOIL, GRADE, DRAINAGE, OR AERATION WITHOUT PROTECTING PRIORITY TREES

MAINTENANCE

CONTINUE TO CARE FOR THE SITE UNTIL THE NEW OWNER TAKES POSSESSION. TAKE THESE STEPS AFTER ALL MATERIALS AND EQUIPMENT HAVE BEEN REMOVED FROM THE SITE:

- REMOVE TREE PROTECTION ZONE FENCES.
- PRUNE ANY DAMAGED TREES. IN SPITE OF PRECAUTIONS, SOME DAMAGE TO PROTECTED TREES MAY OCCUR. IN SUCH CASES, REPAIR ANY DAMAGE TO THE CROWN, TRUNK, OR ROOT SYSTEM IMMEDIATELY.
- REPAIR ROOTS BY CUTTING OFF THE DAMAGED AREAS AND PAINTING THEM WITH TREE PAINT. SPREAD PEAT MOSS OR MOIST TOPSOIL OVER EXPOSED ROOTS.
- REPAIR DAMAGE TO BARK BY TRIMMING AROUND THE DAMAGED AREA AS SHOWN IN FIGURE 6.05D, TAPER THE CUT TO PROVIDE DRAINAGE, AND PAINT WITH TREE PAINT.
- CUT OFF ALL DAMAGED TREE LIMBS ABOVE THE TREE COLLAR AT THE TRUNK OR MAIN BRANCH. USE THREE SEPARATE CUTS AS SHOWN IN FIGURE 6.05D TO AVOID PEELING BARK FROM HEALTHY AREAS OF THE TREE.
- CONTINUE MAINTENANCE CARE. PAY SPECIAL ATTENTION TO ANY STRESSED, DISEASED, OR INSECT-INFESTED TREES. REDUCE TREE STRESS CAUSED BY UNINTENDED CONSTRUCTION DAMAGE BY OPTIMIZING PLANT CARE WITH WATER, MULCH, AND FERTILIZER WHERE APPROPRIATE. CONSULT YOUR TREE EXPERT IF NEEDED.
- INFORM THE PROPERTY OWNER ABOUT THE MEASURES EMPLOYED DURING CONSTRUCTION, WHY THOSE MEASURES WERE TAKEN, AND HOW THE EFFORT CAN BE CONTINUED.

TOPSOILING

MATERIALS

DETERMINE WHETHER THE QUALITY AND QUANTITY OF AVAILABLE TOPSOIL JUSTIFIES SELECTIVE HANDLING. QUALITY TOPSOIL HAS THE FOLLOWING CHARACTERISTICS:

TEXTURE— LOAM, SANDY LOAM, AND SILT LOAM ARE BEST; SANDY CLAY LOAM, SILTY CLAY LOAM, CLAY LOAM, AND LOAMY SAND ARE FAIR. DO NOT USE HEAVY CLAY AND ORGANIC SOILS SUCH AS PEAT OR MUCK AS TOPSOIL

ORGANIC MATTER CONTENT— (SOMETIMES REFERRED TO AS "HUMIC MATTER") SHOULD BE GREATER THAN 1.5% BY WEIGHT.

ACIDITY — PH SHOULD BE GREATER THAN 3.6 BEFORE LIMING, AND LIMING IS REQUIRED IF IT IS LESS THAN 6.0.

SOLUBLE SALTS — SHOULD BE LESS THAN 500 PPM.

SODIUM — SODIUM ADSORPTION RATIO SHOULD BE LESS THAN 12.

THE DEPTH OF MATERIAL MEETING THE ABOVE QUALIFICATIONS SHOULD BE AT LEAST 2 INCHES. SOIL FACTORS SUCH AS ROCK FRAGMENTS, SLOPE, DEPTH TO WATER TABLE, AND LAYER THICKNESS AFFECT THE EASE OF EXCAVATION AND SPREADING OF TOPSOIL. GENERALLY, THE UPPER PART OF THE SOIL, WHICH IS RICHEST IN ORGANIC MATTER, IS MOST DESIRABLE; HOWEVER, MATERIAL EXCAVATED FROM DEEPER LAYERS MAY BE WORTH STORING IF IT MEETS THE OTHER CRITERIA LISTED ABOVE. ORGANIC SOILS SUCH AS MUCKS AND PEATS DO NOT MAKE GOOD TOPSOIL. THEY CAN BE IDENTIFIED BY THEIR EXTREMELY LIGHT WEIGHT WHEN DRY.

STRIPPING

STRIP TOPSOIL ONLY FROM THOSE AREAS THAT WILL BE DISTURBED BY EXCAVATION, FILLING, ROADBUILDING, OR COMPACTION BY EQUIPMENT. A 4-6 INCH STRIPPING DEPTH IS COMMON, BUT DEPTH VARIES DEPENDING ON THE SITE. DETERMINE DEPTH OF STRIPPING BY TAKING SOIL CORES AT SEVERAL LOCATIONS WITHIN EACH AREA TO BE STRIPPED. TOPSOIL DEPTH GENERALLY VARIES ALONG A GRADIENT FROM HILLTOP TO TOE OF THE SLOPE. PUT SEDIMENT BASINS, DIVERSIONS, AND OTHER CONTROLS INTO PLACE BEFORE STRIPPING.

STOCKPILING

SELECT STOCKPILE LOCATION TO AVOID SLOPES, NATURAL DRAINAGEWAYS, AND TRAFFIC ROUTES. ON LARGE SITES, RESPREADING IS EASIER AND MORE ECONOMICAL WHEN TOPSOIL IS STOCKPILED IN SMALL PILES LOCATED NEAR AREAS WHERE THEY WILL BE USED.

SEDIMENT BARRIERS — USE SEDIMENT FENCES OR OTHER BARRIERS WHERE NECESSARY TO RETAIN SEDIMENT.

TEMPORARY SEEDING — PROTECT TOPSOIL STOCKPILES BY TEMPORARILY SEEDING AS SOON AS POSSIBLE, NO MORE THAN 21 CALENDAR DAYS AFTER THE FORMATION OF THE STOCKPILE (PRACTICE 6.10, TEMPORARY SEEDING).

PERMANENT VEGETATION—IF STOCKPILES WILL NOT BE USED WITHIN 90 DAYS THEY MUST BE STABILIZED WITH PERMANENT VEGETATION TO CONTROL EROSION AND WEED GROWTH (PRACTICE 6.11, PERMANENT SEEDING).

SITE PREPARATION

BEFORE SPREADING TOPSOIL, ESTABLISH EROSION AND SEDIMENTATION CONTROL PRACTICES SUCH AS DIVERSIONS, BERMS, DIKES, WATERWAYS, AND SEDIMENT BASINS.

GRADING — MAINTAIN GRADES ON THE AREAS TO BE TOPSOILED ACCORDING TO THE APPROVED PLAN AND DO NOT ALTER THEM BY ADDING TOPSOIL.

LIMIT OF SUBSOIL — WHERE THE PH OF THE EXISTING SUBSOIL IS 6.0 OR LESS, OR THE SOIL IS COMPOSED OF HEAVY CLAYS, INCORPORATE AGRICULTURAL LIMESTONE IN AMOUNTS RECOMMENDED BY SOIL TESTS OR SPECIFIED FOR THE SEEDING MIXTURE TO BE USED (PRACTICE 6.11, PERMANENT SEEDING). INCORPORATE LIME TO A DEPTH OF AT LEAST 2 INCHES BY DISKING.

ROUGHENING — IMMEDIATELY PRIOR TO SPREADING THE TOPSOIL, LOOSEN THE SUBGRADE BY DISKING OR SCARIFYING TO A DEPTH OF AT LEAST 4 INCHES, TO ENSURE BONDING OF THE TOPSOIL AND SUBSOIL. IF NO AMENDMENTS HAVE BEEN INCORPORATED, LOOSEN THE SOIL TO A DEPTH OF AT LEAST 6 INCHES BEFORE SPREADING TOPSOIL.

SPREADING TOPSOIL

UNIFORMLY DISTRIBUTE TOPSOIL TO A MINIMUM COMPACTED DEPTH OF 2 INCHES ON 3:1 SLOPES AND 4 INCHES ON FLATTER SLOPES. TO DETERMINE THE VOLUME OF TOPSOIL REQUIRED FOR APPLICATION TO VARIOUS DEPTHS, USE TABLE 6.04A. DO NOT SPREAD TOPSOIL WHILE IT IS FROZEN OR MUDDY OR WHEN THE SUBGRADE IS WET OR FROZEN. CORRECT ANY IRREGULARITIES IN THE SURFACE THAT RESULT FROM TOPSOILING OR OTHER OPERATIONS TO PREVENT THE FORMATION OF DEPRESSIONS OR WATER POCKETS.

COMPACT THE TOPSOIL ENOUGH TO ENSURE GOOD CONTACT WITH THE UNDERLYING SOIL, BUT AVOID EXCESSIVE COMPACTION, AS IT INCREASES RUNOFF AND INHIBITS SEED GERMINATION. LIGHT PACKING WITH A ROLLER IS RECOMMENDED WHERE HIGH MAINTENANCE TURF IS TO BE ESTABLISHED.

TEMPORARY SEEDING

SPECIFICATIONS

COMPLETE GRADING BEFORE PREPARING SEEDBEDS, AND INSTALL ALL NECESSARY EROSION CONTROL PRACTICES SUCH AS, DIKES, WATERWAYS, AND BASINS. MINIMIZE STEEP SLOPES BECAUSE THEY MAKE SEEDBED PREPARATION DIFFICULT AND INCREASE THE EROSION HAZARD. IF SOILS BECOME COMPACTED DURING GRADING, LOOSEN THEM TO A DEPTH OF 6-8 INCHES USING A RIPPER, HARROW, OR CHISEL PLOW.

SEEDBED PREPARATION

GOOD SEEDBED PREPARATION IS ESSENTIAL TO SUCCESSFUL PLANT ESTABLISHMENT. A GOOD SEEDBED IS WELL-PULVERIZED, LOOSE, AND UNIFORM. WHERE HYDROSEEDING METHODS ARE USED, THE SURFACE MAY BE LEFT WITH A MORE IRREGULAR SURFACE OF LARGE CLODS AND STONES.

LIMING--APPLY LIME ACCORDING TO SOIL TEST RECOMMENDATIONS. IF THE PH (ACIDITY) OF THE SOIL IS NOT KNOWN, AN APPLICATION OF GROUND AGRICULTURAL LIMESTONE AT THE RATE OF 1 TO 1 1/2 TONS/ACRE ON COARSE-TEXTURED SOILS AND 2-3 TONS/ACRE ON FINE-TEXTURED SOILS IS USUALLY SUFFICIENT. APPLY LIMESTONE UNIFORMLY AND INCORPORATE INTO THE TOP 4-6 INCHES OF SOIL. SOILS WITH A PH OF 6 OR HIGHER NEED NOT BE LIMED.

FERTILIZER--BASE APPLICATION RATES ON SOIL TESTS. WHEN THESE ARE NOT POSSIBLE, APPLY A 10-10-10 GRADE FERTILIZER AT 700-1,000 LB/ACRE. BOTH FERTILIZER AND LIME SHOULD BE INCORPORATED INTO THE TOP 4-6 INCHES OF SOIL. IF A HYDRAULIC SEEDER IS USED, DO NOT MIX SEED AND FERTILIZER MORE THAN 30 MINUTES BEFORE APPLICATION.

SURFACE ROUGHENING--IF RECENT TILLAGE OPERATIONS HAVE RESULTED IN A LOOSE SURFACE, ADDITIONAL ROUGHENING MAY NOT BE REQUIRED, EXCEPT TO BREAK UP LARGE CLODS. IF RAINFALL CAUSES THE SURFACE TO BECOME SEALED OR CRUSTED, LOOSEN IT JUST PRIOR TO SEEDING BY DISKING, RAKING, HARROWING, OR OTHER SUITABLE METHODS. GROOVE OR FURROW SLOPES STEEPER THAN 3:1 ON THE CONTOUR BEFORE SEEDING (PRACTICE 6.03, SURFACE ROUGHENING).

PLANT SELECTION

SELECT AN APPROPRIATE SPECIES OR SPECIES MIXTURE FROM TABLE 6.10A FOR SEEDING IN LATE WINTER AND EARLY SPRING, TABLE 6.10B FOR SUMMER, AND TABLE 6.10C FOR FALL.
IN THE MOUNTAINS, DECEMBER AND JANUARY SEEDINGS HAVE POOR CHANCES OF SUCCESS. WHEN IT IS NECESSARY TO PLANT AT THESE TIMES, USE RECOMMENDATIONS FOR FALL AND A SECURELY TACKED MULCH.

SEEDING

EVENLY APPLY SEED USING A CYCLONE SEEDER (BROADCAST), DRILL, CULTIPACKER SEEDER, OR HYDROSEEDER. USE SEEDING RATES GIVEN IN TABLES 6.10A-6.10C. BROADCAST SEEDING AND HYDROSEEDING ARE APPROPRIATE FOR STEEP SLOPES WHERE EQUIPMENT CANNOT BE DRIVEN. HAND BROADCASTING IS NOT RECOMMENDED BECAUSE OF THE DIFFICULTY IN ACHIEVING A UNIFORM DISTRIBUTION.
SMALL GRAINS SHOULD BE PLANTED NO MORE THAN 1 INCH DEEP, AND GRASSES AND LEGUMES NO MORE THAN 1/2 INCH. BROADCAST SEED MUST BE COVERED BY RAKING OR CHAIN DRAGGING, AND THEN LIGHTLY FIRMED WITH A ROLLER OR CULTIPACKER. HYDROSEEDED MIXTURES SHOULD INCLUDE A WOOD FIBER (CELLULOSE) MULCH.

MULCHING

THE USE OF AN APPROPRIATE MULCH WILL HELP ENSURE ESTABLISHMENT UNDER NORMAL CONDITIONS, AND IS ESSENTIAL TO SEEDING SUCCESS UNDER HARSH SITE CONDITIONS (PRACTICE 6.14, MULCHING). HARSH SITE CONDITIONS INCLUDE:

- SEEDING IN FALL FOR WINTER COVER (WOOD FIBER MULCHES ARE NOT CONSIDERED ADEQUATE FOR THIS USE),
- SLOPES STEEPER THAN 3:1,
- EXCESSIVELY HOT OR DRY WEATHER,
- ADVERSE SOILS (SHALLOW, ROCKY, OR HIGH IN CLAY OR SAND), AND
- AREAS RECEIVING CONCENTRATED FLOW.

IF THE AREA TO BE MULCHED IS SUBJECT TO CONCENTRATED WATERFLOW, AS IN CHANNELS, ANCHOR MULCH WITH NETTING (PRACTICE 6.14, MULCHING).
SPECIFICATIONS

MAINTENANCE

RESEED AND MULCH AREAS WHERE SEEDLING EMERGENCE IS POOR, OR WHERE EROSION OCCURS, AS SOON AS POSSIBLE. DO NOT MOW. PROTECT FROM TRAFFIC AS MUCH AS POSSIBLE.

NORTH CAROLINA PROFESSIONAL ENGINEER SEAL 026466 JAMES FILLMORE CHANDLER JR.

THIS DRAWING PREPARED AT THE
RALEIGH OFFICE
5410 Trinity Road, Suite 102 | Raleigh, NC 27607
TEL 919.866.4951 FAX 919.833.8124 www.timmons.com

YOUR VISION ACHIEVED THROUGH OURS.

REVISION DESCRIPTION	DATE

DATE	02/04/2020
DRAWN BY	331
DESIGNED BY	331
CHECKED BY	JFC
SCALE	NTS
JOB NO.	40013
SHEET NO.	C7.4

TIMMONS GROUP
NORTH CAROLINA LICENSE NO. C-1652

REGENCY AT HERITAGE - PHASE 3
ROLESVILLE - WAKE COUNTY - NORTH CAROLINA
EROSION CONTROL NOTES & DETAILS

These plans and associated documents are the exclusive property of TIMMONS GROUP and may not be reproduced in whole or in part and shall not be used for any purpose whatsoever, inclusive, but not limited to construction, bidding, and/or construction staking without the express written consent of TIMMONS GROUP.

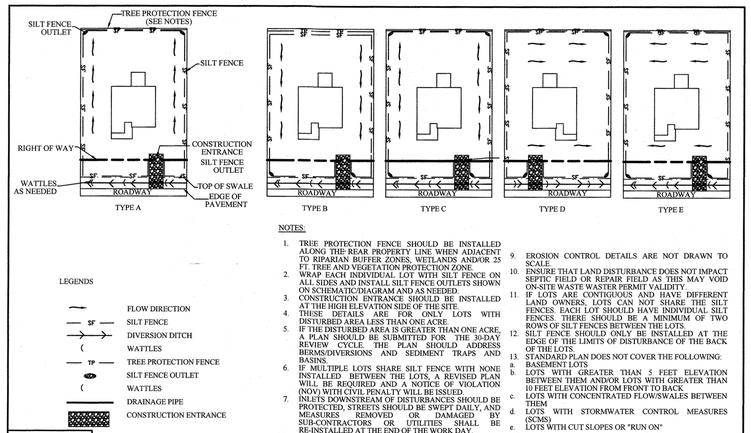

NOTES:

1. TREE PROTECTION FENCE SHOULD BE INSTALLED ALONG THE REAR PROPERTY LINE WHEN ADJACENT TO RIPARIAN BUFFER ZONES, WETLANDS AND/OR 25 FT. TREE AND VEGETATION PROTECTION ZONE.
2. WRAP EACH INDIVIDUAL LOT WITH SILT FENCE ON ALL SIDES AND INSTALL SILT FENCE OUTLETS SHOWN ON SCHEMATIC/DIAGRAM AND AS NEEDED.
3. CONSTRUCTION ENTRANCE SHOULD BE INSTALLED AT THE HIGH ELEVATION SIDE OF THE SITE.
4. THESE DETAILS ARE FOR ONLY LOTS WITH DISTURBED AREA LESS THAN ONE ACRE.
5. IF THE DISTURBED AREA IS GREATER THAN ONE ACRE, A PLAN SHOULD BE SUBMITTED FOR THE 30-DAY REVIEW CYCLE. THE PLAN SHOULD ADDRESS BERMS/DIVERSIONS AND SEDIMENT TRAPS AND BASINS.
6. IF MULTIPLE LOTS SHARE SILT FENCE WITH NONE INSTALLED BETWEEN THE LOTS, A REVISED PLAN WILL BE REQUIRED AND A NOTICE OF VIOLATION (NOV) WITH CIVIL PENALTY WILL BE ISSUED.
7. INLETS DOWNSTREAM OF DISTURBANCES SHOULD BE PROTECTED, STREETS SHOULD BE SWEPT DAILY, AND MEASURES REMOVED OR DAMAGED BY SUB-CONTRACTORS OR UTILITIES SHALL BE RE-INSTALLED AT THE END OF THE WORK DAY.
8. DETAILS FOR SILT FENCE, SILT FENCE OUTLET, CONSTRUCTION ENTRANCE AND OTHER MEASURES PROVIDED ON OTHER SHEETS.
9. EROSION CONTROL DETAILS ARE NOT DRAWN TO SCALE.
10. ENSURE THAT LAND DISTURBANCE DOES NOT IMPACT SBPTIC FIELD OR REPAIR FIELD AS THIS MAY VOID ON-SITE WASTE WASTER PERMIT VALIDITY.
11. IF LOTS ARE CONTIGUOUS AND HAVE DIFFERENT LAND OWNERS, LOTS CAN NOT SHARE THE SILT FENCES. EACH LOT SHOULD HAVE INDIVIDUAL SILT FENCES. THERE SHOULD BE A MINIMUM OF TWO ROWS OF SILT FENCES BETWEEN THE LOTS.
12. SILT FENCE SHOULD ONLY BE INSTALLED AT THE EDGE OF THE LIMITS OF DISTURBANCE OF THE BACK OF THE LOTS.
13. STANDARD PLAN DOES NOT COVER THE FOLLOWING:
    a. BASEMENT LOTS
    b. LOTS WITH GREATER THAN 5 FEET ELEVATION BETWEEN THEM AND/OR LOTS WITH GREATER THAN 10 FEET ELEVATION FROM FRONT TO BACK
    c. LOTS WITH CONCENTRATED FLOW/SWALES BETWEEN THEM
    d. LOTS WITH STORMWATER CONTROL MEASURES (SCMS)
    e. LOTS WITH CUT SLOPES OR "RUN ON"

WAKE COUNTY NORTH CAROLINA

EFFECTIVE: 2/15/19

TYPICAL INDIVIDUAL LOT SEDIMENT & EROSION CONTROL MEASURES DETAIL

GROUND STABILIZATION AND MATERIALS HANDLING PRACTICES FOR COMPLIANCE WITH THE NCG01 CONSTRUCTION GENERAL PERMIT

Implementing the details and specifications on this plan sheet will result in the construction activity being considered compliant with the Ground Stabilization and Materials Handling sections of the NCG01 Construction General Permit (Sections E and F, respectively). The permittee shall comply with the Erosion and Sediment Control plan approved by the delegated authority having jurisdiction. All details and specifications shown on this sheet may not apply depending on site conditions and the delegated authority having jurisdiction.

SECTION E: GROUND STABILIZATION

Required Ground Stabilization Timeframes

Site Area Description	Stabilize within this many calendar days after ceasing land disturbance	Timeframe variations
(a) Perimeter dikes, swales, ditches, and perimeter slopes	7	None
(b) High Quality Water (HQW) Zones	7	None
(c) Slopes steeper than 3:1	7	If slopes are 10' or less in length and are not steeper than 2:1, 14 days are allowed
(d) Slopes 3:1 to 4:1	14	-7 days for slopes greater than 50' in length and with slopes steeper than 4:1 -7 days for perimeter dikes, swales, ditches, perimeter slopes and HQW Zones -10 days for Falls Lake Watershed
(e) Areas with slopes flatter than 4:1	14	-7 days for perimeter dikes, swales, ditches, perimeter slopes and HQW Zones -10 days for Falls Lake Watershed unless there is zero slope

Note: After the permanent cessation of construction activities, any areas with temporary ground stabilization shall be converted to permanent ground stabilization as soon as practicable but in no case longer than 90 calendar days after the last land disturbing activity. Temporary ground stabilization shall be maintained in a manner to render the surface stable against accelerated erosion until permanent ground stabilization is achieved.

GROUND STABILIZATION SPECIFICATION

Stabilize the ground sufficiently so that rain will not dislodge the soil. Use one of the techniques in the table below:

Temporary Stabilization	Permanent Stabilization
• Temporary grass seed covered with straw or other mulches and tackifiers • Hydroseeding • Rolled erosion control products with or without temporary grass seed • Appropriately applied straw or other mulch • Plastic sheeting	• Permanent grass seed covered with straw or other mulches and tackifiers • Geotextile fabrics such as permanent soil reinforcement matting • Hydroseeding • Shrubs or other permanent plantings covered with mulch • Uniform and evenly distributed ground cover sufficient to restrain erosion • Structural methods such as concrete, asphalt or retaining walls • Rolled erosion control products with grass seed

POLYACRYLAMIDES (PAMS) AND FLOCCULANTS

1. Select flocculants that are appropriate for the soils being exposed during construction, selecting from the *NC DWR List of Approved PAMS/Flocculants*.
2. Apply flocculants at or before the inlets to Erosion and Sediment Control Measures.
3. Apply flocculants at the concentrations specified in the *NC DWR List of Approved PAMS/Flocculants* and in accordance with the manufacturer's instructions.
4. Provide ponding area for containment of treated Stormwater before discharging offsite.
5. Store flocculants in leak-proof containers that are kept under storm-resistant cover or surrounded by secondary containment structures.

EQUIPMENT AND VEHICLE MAINTENANCE

1. Maintain vehicles and equipment to prevent discharge of fluids.
2. Provide drip pans under any stored equipment.
3. Identify leaks and repair as soon as feasible, or remove leaking equipment from the project.
4. Collect all spent fluids, store in separate containers and properly dispose as hazardous waste (recycle when possible).
5. Remove leaking vehicles and construction equipment from service until the problem has been corrected.
6. Bring used fuels, lubricants, coolants, hydraulic fluids and other petroleum products to a recycling or disposal center that handles these materials.

LITTER, BUILDING MATERIAL AND LAND CLEARING WASTE

1. Never bury or burn waste. Place litter and debris in approved waste containers.
2. Provide a sufficient number and size of waste containers (e.g dumpster, trash receptacle) on site to contain construction and domestic wastes.
3. Locate waste containers at least 50 feet away from storm drain inlets and surface waters unless no other alternatives are reasonably available.
4. Locate waste containers on areas that do not receive substantial amounts of runoff from upland areas and does not drain directly to a storm drain, stream or wetland.
5. Cover waste containers at the end of each workday and before storm events or provide secondary containment. Repair or replace damaged waste containers.
6. Anchor all lightweight items in waste containers during times of high winds.
7. Empty waste containers as needed to prevent overflow. Clean up immediately if containers overflow.
8. Dispose waste off-site at an approved disposal facility.
9. On business days, clean up and dispose of waste in designated waste containers.

PAINT AND OTHER LIQUID WASTE

1. Do not dump paint and other liquid waste into storm drains, streams or wetlands.
2. Locate paint washouts at least 50 feet away from storm drain inlets and surface waters unless no other alternatives are reasonably available.
3. Contain liquid wastes in a controlled area.
4. Containment must be labeled, sized and placed appropriately for the needs of site.
5. Prevent the discharge of soaps, solvents, detergents and other liquid wastes from construction sites.

PORTABLE TOILETS

1. Install portable toilets on level ground, at least 50 feet away from storm drains, streams or wetlands unless there is no alternative reasonably available. If 50 foot offset is not attainable, provide relocation of portable toilet behind silt fence or place on a gravel pad and surround with sand bags.
2. Provide staking or anchoring of portable toilets during periods of high winds or in high foot traffic areas.
3. Monitor portable toilets for leaking and properly dispose of any leaked material. Utilize a licensed sanitary waste hauler to remove leaking portable toilets and replace with properly operating unit.

EARTHEN STOCKPILE MANAGEMENT

1. Show stockpile locations on plans. Locate earthen-material stockpile areas at least 50 feet away from storm drain inlets, sediment basins, perimeter sediment controls and surface waters unless it can be shown no other alternatives are reasonably available.
2. Protect stockpile with silt fence installed along toe of slope with a minimum offset of five feet from the toe of stockpile.
3. Provide stable stone access point when feasible.
4. Stabilize stockpile within the timeframes provided on this sheet and in accordance with the approved plan and any additional requirements. Soil stabilization is defined as vegetative, physical or chemical coverage techniques that will restrain accelerated erosion on disturbed soils for temporary or permanent control needs.

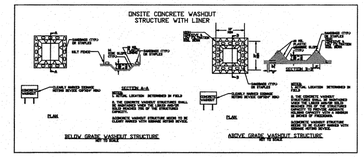

CONCRETE WASHOUTS

1. Do not discharge concrete or cement slurry from the site.
2. Dispose of, or recycle settled, hardened concrete residue in accordance with local and state solid waste regulations and at an approved facility.
3. Manage washout from mortar mixers in accordance with the above item and in addition place the mixer and associated materials on impervious barrier and within lot perimeter silt fence.
4. Install temporary concrete washouts per local requirements, where applicable. If an alternate method or product is to be used, contact your approval authority for review and approval. If local standard details are not available, use one of the two types of temporary concrete washouts provided on this detail.
5. Do not use concrete washouts for dewatering or storing defective curb or sidewalk sections. Stormwater accumulated within the washout may not be pumped into or discharged to the storm drain system or receiving surface waters. Liquid waste must be pumped out and removed from project.
6. Locate washouts at least 50 feet from storm drain inlets and surface waters unless it can be shown that no other alternatives are reasonably available. At a minimum, install protection of storm drain inlet(s) closest to the washout which could receive spills or overflow.
7. Locate washouts in an easily accessible area, on level ground and install a stone entrance pad in front of the washout. Additional controls may be required by the approving authority.
8. Install at least one sign directing concrete trucks to the washout within the project limits. Post signage on the washout itself to identify this location.
9. Remove leavings from the washout when at approximately 75% capacity to limit overflow events. Replace the tarp, sand bags or other temporary structural components when no longer functional. When utilizing alternative or proprietary products, follow manufacturer's instructions.
10. At the completion of the concrete work, remove remaining leavings and dispose of in an approved disposal facility. Fill pit, if applicable, and stabilize any disturbance caused by removal of washout.

HERBICIDES, PESTICIDES AND RODENTICIDES

1. Store and apply herbicides, pesticides and rodenticides in accordance with label restrictions.
2. Store herbicides, pesticides and rodenticides in their original containers with the label, which lists directions for use, ingredients and first aid steps in case of accidental poisoning.
3. Do not store herbicides, pesticides and rodenticides in areas where flooding is possible or where they may spill or leak into wells, stormwater drains, ground water or surface water. If a spill occurs, clean area immediately.
4. Do not stockpile these materials onsite.

HAZARDOUS AND TOXIC WASTE

1. Create designated hazardous waste collection areas on-site.
2. Place hazardous waste containers under cover or in secondary containment.
3. Do not store hazardous chemicals, drums or bagged materials directly on the ground.

NCG01 GROUND STABILIZATION AND MATERIALS HANDLING

EFFECTIVE: 04/01/19

PART III
SELF-INSPECTION, RECORDKEEPING AND REPORTING

SECTION A: SELF-INSPECTION

Self-inspections are required during normal business hours in accordance with the table below. When adverse weather or site conditions would cause the safety of the inspection personnel to be in jeopardy, the inspection may be delayed until the next business day on which it is safe to perform the inspection. In addition, when a storm event of equal to or greater than 1.0 inch occurs outside of normal business hours, the self-inspection shall be performed upon the commencement of the next business day. Any time when inspections were delayed shall be noted in the Inspection Record.

Inspect	Frequency (during normal business hours)	Inspection records must include:
(1) Rain gauge maintained in good working order	Daily	Daily rainfall amounts. If no daily rain gauge observations are made during weekend or holiday periods, and no individual-day rainfall information is available, record the cumulative rain measurement for those un-attended days (and this will determine if a site inspection is needed). Days on which no rainfall occurred shall be recorded as "zero." The permittee may use another rain monitoring device approved by the Division
(2) E&SC Measures	At least once per 7 calendar days and within 24 hours of a rain event ≥ 1.0 inch in 24 hours	1. Identification of the measures inspected, 2. Date and time of the inspection, 3. Name of the person performing the inspection, 4. Indication of whether the measures were operating properly, 5. Description of maintenance needs for the measure, 6. Description, evidence, and date of corrective actions taken.
(3) Stormwater discharge outfalls (SDOs)	At least once per 7 calendar days and within 24 hours of a rain event ≥ 1.0 inch in 24 hours	1. Identification of the discharge outfalls inspected, 2. Date and time of the inspection, 3. Name of the person performing the inspection, 4. Evidence of indicators of stormwater pollution such as oil sheen, floating or suspended solids or discoloration, 5. Indication of visible sediment leaving the site, 6. Description, evidence, and date of corrective actions taken.
(4) Perimeter of site	At least once per 7 calendar days and within 24 hours of a rain event ≥ 1.0 inch in 24 hours	If visible sedimentation is found outside site limits, then a record of the following shall be made: 1. Actions taken to clean up or stabilize the sediment that has left the site limits, 2. Description, evidence, and date of corrective actions taken, and 3. An explanation as to the actions taken to control future releases.
(5) Streams or wetlands onsite or offsite (where accessible)	At least once per 7 calendar days and within 24 hours of a rain event ≥ 1.0 inch in 24 hours	If the stream or wetland has increased visible sedimentation or a stream has visible increased turbidity from the construction activity, then a record of the following shall be made: 1. Description, evidence and date of corrective actions taken, and 2. Records of the required reports to the appropriate Division Regional Office per Part III, Section C, Item (2)(a) of this permit.
(6) Ground stabilization measures	After each phase of grading	1. The phase of grading (installation of perimeter E&SC measures, clearing and grubbing, installation of storm drainage facilities, completion of all land-disturbing activity, construction or redevelopment, permanent ground cover). 2. Documentation that the required ground stabilization measures have been provided within the required timeframe or an assurance that they will be provided as soon as possible.

NOTE: The rain inspection resets the required 7 calendar day inspection requirement.

PART III
SELF-INSPECTION, RECORDKEEPING AND REPORTING

SECTION B: RECORDKEEPING

1. E&SC Plan Documentation

The approved E&SC plan as well as any approved deviation shall be kept on the site. The approved E&SC plan must be kept up-to-date throughout the coverage under this permit. The following items pertaining to the E&SC plan shall be kept on site and available for inspection at all times during normal business hours.

Item to Document	Documentation Requirements
(a) Each E&SC measure has been installed and does not significantly deviate from the locations, dimensions and relative elevations shown on the approved E&SC plan.	Initial and date each E&SC measure on a copy of the approved E&SC plan or complete, date and sign an inspection report that lists each E&SC measure shown on the approved E&SC plan. This documentation is required upon the initial installation of the E&SC measures or if the E&SC measures are modified after initial installation.
(b) A phase of grading has been completed.	Initial and date a copy of the approved E&SC plan or complete, date and sign an inspection report to indicate completion of the construction phase.
(c) Ground cover is located and installed in accordance with the approved E&SC plan.	Initial and date a copy of the approved E&SC plan or complete, date and sign an inspection report to indicate compliance with approved ground cover specifications.
(d) The maintenance and repair requirements for all E&SC measures have been performed.	Complete, date and sign an inspection report.
(e) Corrective actions have been taken to E&SC measures.	Initial and date a copy of the approved E&SC plan or complete, date and sign an inspection report to indicate the completion of the corrective action.

2. Additional Documentation to be Kept on Site

In addition to the E&SC plan documents above, the following items shall be kept on the site and available for inspectors at all times during normal business hours, unless the Division provides a site-specific exemption based on unique site conditions that make this requirement not practical:

(a) This General Permit as well as the Certificate of Coverage, after it is received.

(b) Records of inspections made during the previous twelve months. The permittee shall record the required observations on the Inspection Record Form provided by the Division or a similar inspection form that includes all the required elements. Use of electronically-available records in lieu of the required paper copies will be allowed if shown to provide equal access and utility as the hard-copy records.

3. Documentation to be Retained for Three Years

All data used to complete the e-NOI and all inspection records shall be maintained for a period of three years after project completion and made available upon request. [40 CFR 122.41]

PART III
SELF-INSPECTION, RECORDKEEPING AND REPORTING

SECTION C: REPORTING

1. Occurrences that Must be Reported

Permittees shall report the following occurrences:

(a) Visible sediment deposition in a stream or wetland.

(b) Oil spills if:
- They are 25 gallons or more,
- They are less than 25 gallons but cannot be cleaned up within 24 hours,
- They cause sheen on surface waters (regardless of volume), or
- They are within 100 feet of surface waters (regardless of volume).

(c) Releases of hazardous substances in excess of reportable quantities under Section 311 of the Clean Water Act (Ref: 40 CFR 110.3 and 40 CFR 117.3) or Section 102 of CERCLA (Ref: 40 CFR 302.4) or G.S. 143-215.85.

(d) Anticipated bypasses and unanticipated bypasses.

(e) Noncompliance with the conditions of this permit that may endanger health or the environment.

2. Reporting Timeframes and Other Requirements

After a permittee becomes aware of an occurrence that must be reported, he shall contact the appropriate Division regional office within the timeframes and in accordance with the other requirements listed below. Occurrences outside normal business hours may also be reported to the Department's Environmental Emergency Center personnel at (800) 858-0368.

Occurrence	Reporting Timeframes (After Discovery) and Other Requirements
(a) Visible sediment deposition in a stream or wetland	• ***Within 24 hours,*** an oral or electronic notification. • ***Within 7 calendar days,*** a report that contains a description of the sediment and actions taken to address the cause of the deposition. Division staff may waive the requirement for a written report on a case-by-case basis. • If the stream is named on the NC 303(d) list as impaired for sediment-related causes, the permittee may be required to perform additional monitoring, inspections or apply more stringent practices if staff determine that additional requirements are needed to assure compliance with the federal or state impaired-waters conditions.
(b) Oil spills and release of hazardous substances per Item 1(b)-(c) above	• ***Within 24 hours,*** an oral or electronic notification. The notification shall include information about the date, time, nature, volume and location of the spill or release.
(c) Anticipated bypasses [40 CFR 122.41(m)(3)]	• ***A report at least ten days before the date of the bypass, if possible.*** The report shall include an evaluation of the anticipated quality and effect of the bypass.
(d) Unanticipated bypasses [40 CFR 122.41(m)(3)]	• ***Within 24 hours,*** an oral or electronic notification. • ***Within 7 calendar days,*** a report that includes an evaluation of the quality and effect of the bypass.
(e) Noncompliance with the conditions of this permit that may endanger health or the environment[40 CFR 122.41(l)(7)]	• ***Within 24 hours,*** an oral or electronic notification. • ***Within 7 calendar days,*** a report that contains a description of the noncompliance, and its causes; the period of noncompliance, including exact dates and times, and if the noncompliance has not been corrected, the anticipated time noncompliance is expected to continue; and steps taken or planned to reduce, eliminate, and prevent reoccurrence of the noncompliance. [40 CFR 122.41(l)(6). • Division staff may waive the requirement for a written report on a case-by-case basis.

PART II, SECTION G, ITEM (4)
DRAW DOWN OF SEDIMENT BASINS FOR MAINTENANCE OR CLOSE OUT

Sediment basins and traps that receive runoff from drainage areas of one acre or more shall use outlet structures that withdraw water from the surface when these devices need to be drawn down for maintenance or close out unless this is infeasible. The circumstances in which it is not feasible to withdraw water from the surface shall be rare (for example, times with extended cold weather). Non-surface withdrawals from sediment basins shall be allowed only when all of the following criteria have been met:

(a) The E&SC plan authority has been provided with documentation of the non-surface withdrawal and the specific time periods or conditions in which it will occur. The non-surface withdrawal shall not commence until the E&SC plan authority has approved these items,
(b) The non-surface withdrawal has been reported as an anticipated bypass in accordance with Part III, Section C, Item (2)(c) and (d) of this permit,
(c) Dewatering discharges are treated with controls to minimize discharges of pollutants from stormwater that is removed from the sediment basin. Examples of appropriate controls include properly sited, designed and maintained dewatering tanks, weir tanks, and filtration systems,
(d) Vegetated, upland areas of the sites or a properly designed stone pad is used to the extent feasible at the outlet of the dewatering treatment devices described in Item (c) above,
(e) Velocity dissipation devices such as check dams, sediment traps, and riprap are provided at the discharge points of all dewatering devices, and
(f) Sediment removed from the dewatering treatment devices described in Item (c) above is disposed of in a manner that does not cause deposition of sediment into waters of the United States.

NCG01 SELF-INSPECTION, RECORDKEEPING AND REPORTING

EFFECTIVE: 04/01/19

THIS DRAWING PREPARED AT THE
5410 Trinity Road, Suite 102 | Raleigh, NC 27607
TEL: 919.866.4951 FAX: 919.833.8124 www.timmons.com

YOUR VISION ACHIEVED THROUGH OURS.

DATE	REVISION DESCRIPTION

DATE 02/04/2020
DRAWN BY 331
DESIGNED BY 331
CHECKED BY JFC
SCALE NTS

TIMMONS GROUP
NORTH CAROLINA LICENSE NO. C-1652

REGENCY AT HERITAGE - PHASE 3
ROLESVILLE - WAKE COUNTY - NORTH CAROLINA
EROSION CONTROL NOTES & DETAILS

JOB NO. 40013
SHEET NO. C7.5

These plans and associated documents are the exclusive property of TIMMONS GROUP and may not be reproduced in whole or in part and shall not be used for any purpose whatsoever, including, but not limited to construction, building, and/or subdivision staking without the express written consent of TIMMONS GROUP.

S:\331\40013-Regency_at_Heritage_Revision\DWG\Sheet\CD\ROLESVILLE CD\40013-RL-C8.0-EROSION CONTROL PLAN.dwg | Plotted by Sean Hein

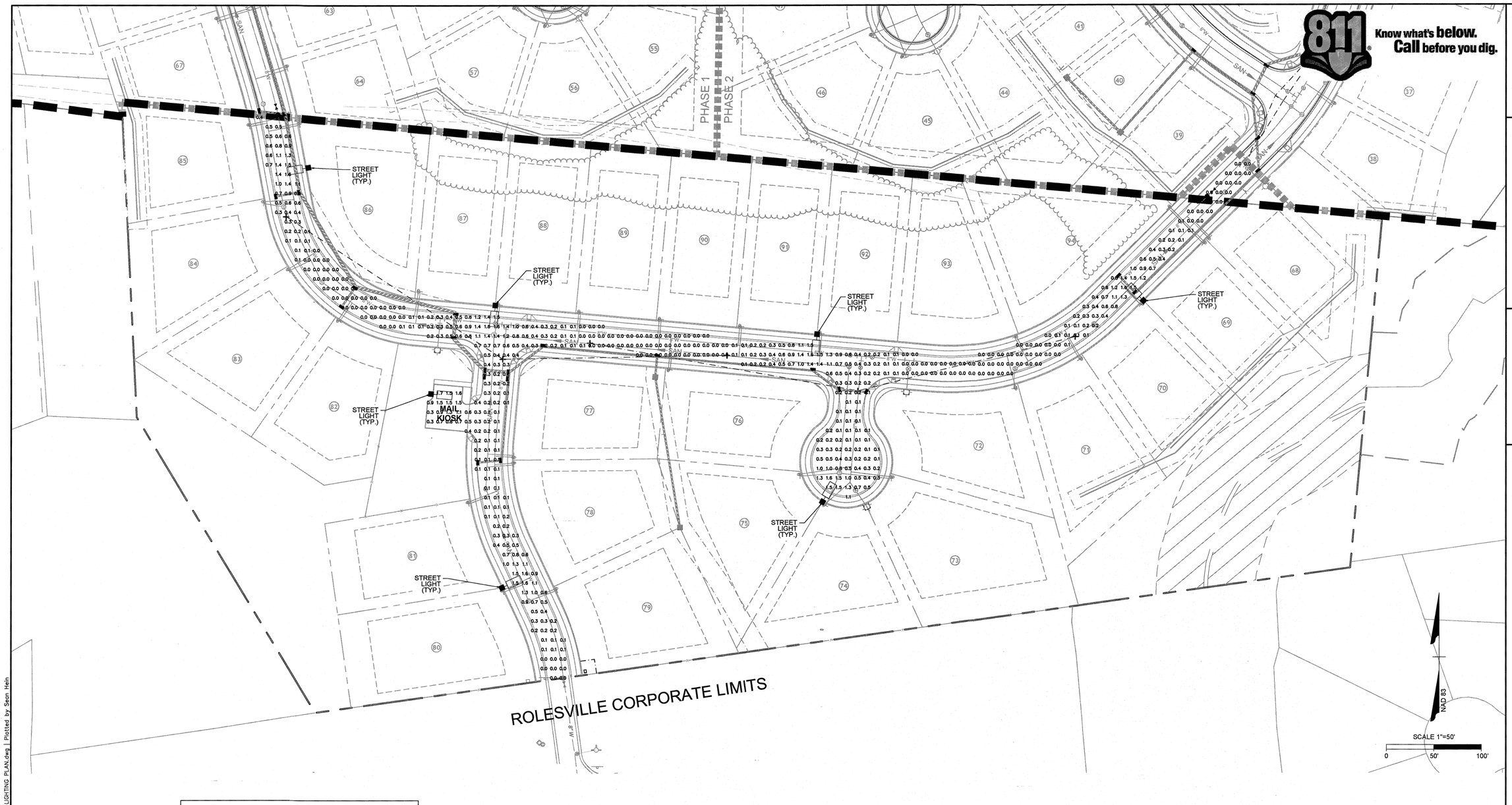

GENERAL PHOTOMETRIC SCHEDULE	
MINIMUM FOOT-CANDLES	0
MAXIMUM FOOT-CANDLES	1.7
AVERAGE FOOT-CANDLES	0.36
AVERAGE TO MINIMUM FC RATIO	297.14

LUMINAIRE SCHEDULE

SYMBOL	QUANTITY	LUMENS / LAMP	DESCRIPTION	LAMP DEPRECIATION	WATTS
	7	6760	Autobahn ATBS, P20 Performance Package, Roadway Type III, 4000K/5000K CCT, 70 CRI Min.	0.85	50W

LIGHTING NOTES:

1. ALL OUTDOOR LIGHTING FIXTURES NOT MOUNTED ON BUILDINGS SHALL BE LOCATED A MINIMUM OF 10' FROM A PROPERTY LINE OR RIGHT-OF-WAY LINE, AND SHOULD BE NO CLOSER THAN 2' FROM ANY REQUIRED PERIMETER OR STREETSCAPE BUFFER.
2. ALL OUTDOOR LIGHTING SHALL BE DESIGNED AND LOCATED SUCH THAT THE MAXIMUM ILLUMINATION MEASURED IN FOOT-CANDLES AT THE PROPERTY LINE DOES NOT EXCEED 0.3 ONTO ADJACENT RESIDENTIAL PROPERTY AND 1.0 ONTO ADJACENT COMMERCIAL SITES AND PUBLIC RIGHT-OF-WAY.
3. LAMPS FOR NON-CUTOFF FIXTURES SHALL NOT EXCEED 100 WATTS. LAMPS FOR CUTOFF FIXTURES SHALL NOT EXCEED 250 WATTS UNLESS THE TOWN MANAGER GIVES SPECIAL PERMISSION AND THE OVERALL LIGHTING PLAN IS APPROVED DURING THE DEVELOPMENT REVIEW PROCESS.
4. BEFORE CERTIFICATES OF OCCUPANCY ARE RELEASED, THE OWNER / BUILDER MUST SUPPLY THE TOWN WITH A FINAL LETTER OF CERTIFICATION FROM THE LIGHTING ENGINEER AND / OR MANUFACTURER VERIFYING THAT ALL SITE LIGHTING IS INSTALLED ACCORDING TO TOWN STANDARDS, THE APPROVED PLANS AND ANY APPLICABLE CONDITIONS.

LEGEND

AUTOBAHN LED ROADWAY & SECURITY PACKAGE E(4,700 LUMENS LED, ROADWAY TYPE III) ALUMINUM POLE - HEIGHT 30'

FIXTURE TYPE SHALL BE FULL CUT-OFF

LEGEND

- 100-YR FLOODPLAIN
- EXISTING WETLANDS
- NEUSE RIVER BUFFER

LEGEND

- PROPERTY LINE
- EXISTING RIGHT-OF-WAY
- EXISTING ROAD CENTER
- ADJACENT PROPERTY LINE
- 100-YR FLOODPLAIN
- PROPOSED PERIMETER BUFFER
- PROPOSED DRAIN EASEMENT
- PROPOSED RIGHT-OF-WAY
- PROPOSED LOT LINE
- BUILDING SETBACK
- PROPOSED ROAD CENTER
- PROPOSED EOP

811 Know what's below. Call before you dig.

NORTH CAROLINA PROFESSIONAL SEAL 026465 ENGINEER JAMES FRANCIS CHAMBERS

THIS DRAWING PREPARED AT THE
RALEIGH OFFICE
5410 Trinity Road, Suite 102 | Raleigh, NC 27607
TEL 919.866.4951 FAX 919.833.8124 www.timmons.com

YOUR VISION ACHIEVED THROUGH OURS.

DATE	REVISION DESCRIPTION

DATE	02/04/2020
DRAWN BY	331
DESIGNED BY	331
CHECKED BY	JFC
SCALE	AS SHOWN

TIMMONS GROUP

NORTH CAROLINA LICENSE NO. C-1652

REGENCY AT HERITAGE - PHASE 3

ROLESVILLE - WAKE COUNTY - NORTH CAROLINA

LIGHTING PLAN

JOB NO. 40013

SHEET NO. C8.0

These plans and associated documents are the exclusive property of TIMMONS GROUP and may not be reproduced in whole or in part and shall not be used for any purposes whatsoever, inclusive, but not limited to construction, bidding, and/or construction staking without the express written consent of TIMMONS GROUP.

S:\331\40013-Regency_at_Heritage_Revision\DWG\Sheet\CD\ROLESVILLE CD\40013-RL-C8.0-LIGHTING PLAN.dwg | Plotted by Sean Hein

Consistent with LEED® goals & Green Globes℠ criteria for light pollution reduction

NIGHTTIME FRIENDLY

Autobahn Series ATBS
Roadway & Security Lighting

PRODUCT OVERVIEW

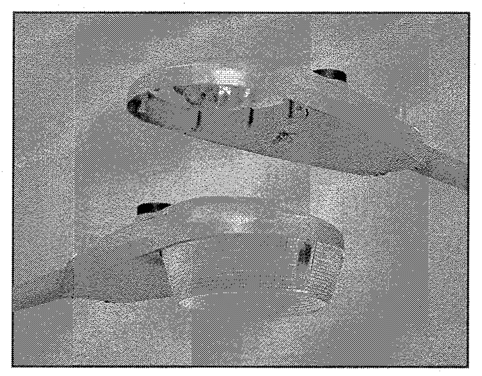

Applications:
Residential streets
Parking lots
General security lighting

DIMENSIONS

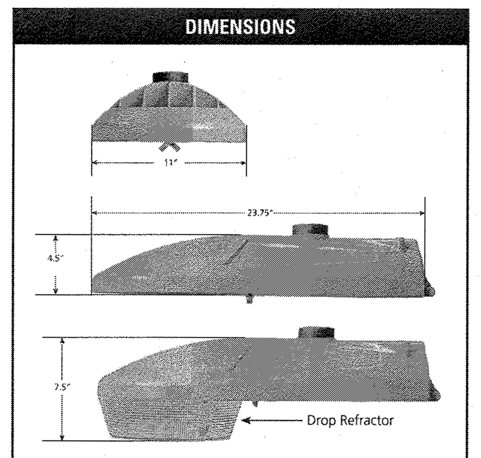

Effective Projected Area (EPA) The EPA for the ATBS is 0.3 sq. ft., Approx. Wt. = 12 lbs. (5 kg)

STANDARDS
DesignLights Consortium® (DLC) qualified product. Not all versions of this product may be DLC qualified. Please check the DLC Qualified Products List at www.designlights.org/QPL to confirm which versions are qualified.

Color temperatures of ≤ 3000K must be specified for International Dark-Sky Association certification.

Rated for -40°C to 40°C ambient
CSA Certified to U.S. and Canadian standards
Complies with ANSI: C136.2, C136.10, C136.14, C136.31, C136.15, C136.37

Features:

OPTICAL
Same Light: Performance is comparable to 50W – 150W HPS and up to 175W Mercury Vapor roadway and security lighting luminaires.

White Light: Correlated color temperature - 4000K, 70 CRI minimum, 3000K, 70 CRI minimum or optional 5000K, 70 CRI minimum.

IP66 rated borosilicate glass optics ensure longevity and minimize dirt depreciation. Unique IP66 rated LED light engines provide 0% uplight and restrict backlight to within sidewalk depth, providing optimal application coverage and optimal pole spacing.

Available distributions are Type II, III, and V roadway distributions. When used with the optional acrylic refractor the unit provides approximately 10% uplight and increased vertical foot-candles

ELECTRICAL
Expected Life: LED light engines are rated >100,000 hours at 25°C, L70. Electronic driver has an expected life of 100,000 hours at a 25°C ambient.

Lower Energy: Saves an expected 40-60% over comparable HID luminaires.

Robust Surge Protection: Three different surge protection options provide a minimum of ANSI C136.2 10kV/5kA protection. 20kV/10kA surge protection is also available.

MECHANICAL
Includes standard AEL lineman-friendly features such as tool-less entry, 3 station terminal block and quick disconnects. Bubble level located inside the electrical compartment for easy leveling at installation.

Rugged die-cast aluminum housing and door are polyester powder-coated for durability and corrosion resistance. Rigorous five-stage pre-treating and painting process yields a finish that achieves a scribe creepage rating of 8 (per ASTM D1654) after over 5000 hours exposure to salt fog chamber (operated per ASTM B117).

Mast arm mount is adjustable for arms from 1-1/4" to 2" (1-5/8" to 2-3/8" O.D.) diameter. The 2-bolt clamping mechanism provides 3G vibration rating per ANSI C136.

The Wildlife shield is cast into the housing (not a separate piece).

CONTROLS
NEMA 3 pin photocontrol receptacle is standard, with the Acuity designed ANSI standard 5 pin and 7 pin receptacles optionally available.

Premium solid state locking-style photocontrol – PCSS (10 year rated life) Extreme long life solid state locking-style photocontrol – PCL1 (20 year rated life)

Optional onboard Adjustable Output module allows the light output and input wattage to be modified to meet site specific requirements, and also can allow a single fixture to be flexibly applied in many different applications.

Note: Actual performance may differ as a result of end-user environment and application. Specifications subject to change without notice.

© 2014-2017 Acuity Brands Lighting, Inc. 11/20/17 ATBS

AEL American Electric Lighting

Autobahn Series ATBS
Roadway & Security Lighting

ORDERING INFORMATION

Example: ATBS A MVOLT R2

Series
- **ATBS** Autobahn LED Roadway & Security

Performance Packages
- **A** 2,500 lumens
- **B** 3,200 lumens
- **C** 3,800 lumens
- **E** 4,700 lumens
- **F** 5,400 lumens
- **G** 6,100 lumens
- **H** 7,100 lumens
- **I** 8,500 lumens

Voltage
- **MVOLT** Multi-volt, 120-277V

Optics
- **R2** Roadway Type II
- **R3** Roadway Type III
- **R5** Roadway Type V
- **D2** Type II, Drop Refractor included
- **D3** Type III, Drop Refractor included
- **D5** Type V, Drop Refractor included

Options

Color Temperature (CCT)
- **(Blank)** 4000K CCT, 70 CRI Min.
- **3K** 3000K CCT, 70 CRI Min.
- **5K** 5000K CCT, 70 CRI Min.

Paint
- **Blank** Gray (Standard)
- **BK** Black
- **WH** White
- **BZ** Bronze

Surge Protection
- Standard 10kV/5kA SPD
- **Blank** Acuity SPD-10kV/5kA with inductive filter (Standard)
- **20** 20kV/10KA SPD
- **MP** MOV Pack
- **IL** SPD with Indicator Light

Misc.
- **HSS** House Side Shield
- **NL** NEMA Label

- **XL** Not CSA Certified

Controls
- **(Blank)** 3 Pin NEMA Photocontrol Receptacle
- **NR**[1] No Photocontrol Receptacle
- **DM**[2] 0V-10V Dimmable Driver
- **P5** 5 Pin Photocontrol Receptacle (dimmable driver included)
- **P7** 7 Pin Photocontrol Receptacle (dimmable driver included)
- **PCSS**[1] DTL DSS Photocontrol
- **PCL1**[1] DTL DLL Photocontrol 120-277V
- **AO** Field Adjustable Output
- **SH** Shorting Cap

Packages
- **(Blank)** Standard Pack
- **JP** Job Pack (54/pallet)

Install Packages
- **PKGS** DTL DSS Photocontrol
- **PKGL** DTL DLL Photocontrol

Packages ship with selected photocontrol, 24", 1 1/4" diameter arm, 5' of prewire and mounting hardware

Accessories
- **ATBSREF** Drop Refractor for field installation
- **ATBSHSS** House Side Shield for field installation
- **ATBSLTS** Light Trespass Shield for field installation

Notes
1. Not available with Install Packages.
2. Not available with AO option.

AEL American Electric Lighting
AEL Headquarters, 3825 Columbus Road, Granville, OH 43023
www.americanelectriclighting.com
© 2014-2017 Acuity Brands Lighting, Inc. All Rights Reserved. 11/20/17 ATBS

Warranty Five-year limited warranty. Complete warranty terms located at: www.acuitybrands.com/CustomerResources/Terms_and_conditions.aspx
Actual performance may differ as a result of end-user environment and application.
All values are design or typical values, measured under laboratory conditions at 25 °C.
Specifications subject to change without notice.
Please contact your sales representative for the latest product information.

Autobahn Series ATBS
Roadway & Security Lighting

PERFORMANCE PACKAGE

Performance Package	Distribution	Lumens	Input Watts	LPW	50K Hours	LLD @ 25°C 75K Hours	100K Hours
A	R2	2,514	19	132	0.93	0.89	0.85
	R3	2,515		132			
	R5	2,649		139			
	D2	2,394		126			
	D3	2,372		125			
	D5	2,521		133			
B	R2	3,166	24	132	0.93	0.89	0.85
	R3	3,167		132			
	R5	3,336		139			
	D2	3,015		126			
	D3	2,988		124			
	D5	3,175		132			
C	R2	3,784	31	122	0.93	0.89	0.85
	R3	3,780		122			
	R5	4,029		130			
	D2	3,604		116			
	D3	3,566		115			
	D5	3,835		124			
E	R2	4,770	40	119	0.93	0.89	0.85
	R3	4,704		118			
	R5	4,867		122			
	D2	4,543		114			
	D3	4,438		111			
	D5	4,650		116			
F	R2	5,392	47	115	0.93	0.89	0.85
	R3	5,407		115			
	R5	5,175		110			
	D2	5,135		109			
	D3	5,101		109			
	D5	5,051		107			
G	R2	6,235	50	125	0.94	0.92	0.90
	R3	6,101		122			
	R5	6,404		128			
	D2	5,938		119			
	D3	5,756		115			
	D5	6,193		124			
H	R2	7194	60	120	0.94	0.92	0.90
	R3	7,141		119			
	R5	7,508		125			
	D2	6,851		114			
	D3	6,737		112			
	D5	7,150		119			
I	R2	8,653	76	114	0.94	0.92	0.90
	R3	8,525		112			
	R5	9,003		118			
	D2	8,241		108			
	D3	8,042		106			
	D5	8,574		113			

Note: Information shown above is based on 4000K nominal system data. Individual fixture performance may vary. Specifications subject to change without notice.

AEL American Electric Lighting
AEL Headquarters, 3825 Columbus Road, Granville, OH 43023
www.americanelectriclighting.com
© 2014-2017 Acuity Brands Lighting, Inc. All Rights Reserved. 11/20/17 ATBS

Warranty Five-year limited warranty. Complete warranty terms located at: www.acuitybrands.com/CustomerResources/Terms_and_conditions.aspx
Actual performance may differ as a result of end-user environment and application.
All values are design or typical values, measured under laboratory conditions at 25 °C.
Specifications subject to change without notice.
Please contact your sales representative for the latest product information.

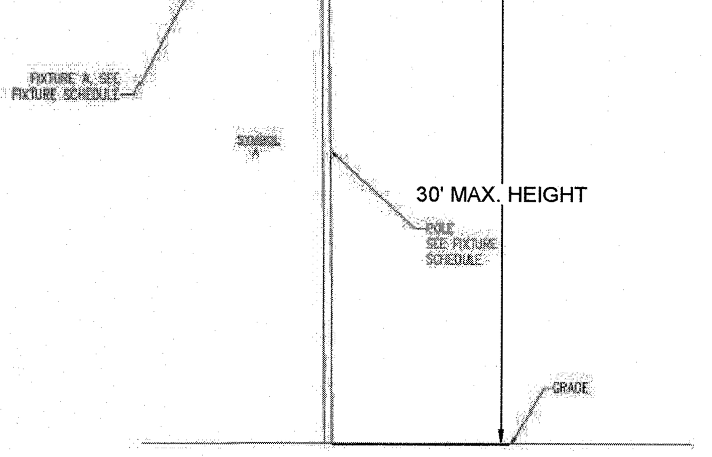

2 FIXTURE 'A' DETAIL
SCALE: N.T.S.

THIS DRAWING PREPARED AT THE **RALEIGH OFFICE**
5410 Trinity Road, Suite 102 | Raleigh, NC 27607
TEL 919.866.4951 FAX 919.833.8124 www.timmons.com

YOUR VISION ACHIEVED THROUGH OURS.

DATE	REVISION DESCRIPTION

DATE	02/04/2020
DRAWN BY	331
DESIGNED BY	331
CHECKED BY	JFC
SCALE	N/A

TIMMONS GROUP
NORTH CAROLINA LICENSE NO. C-1652

REGENCY AT HERITAGE - PHASE 3
ROLESVILLE - WAKE COUNTY - NORTH CAROLINA
LIGHTING SPECS & DETAILS

JOB NO.	40013
SHEET NO.	C8.1

These plans and associated documents are the exclusive property of TIMMONS GROUP and may not be reproduced in whole or in part and shall not be used for any purpose whatsoever, inclusive, but not limited to construction, bidding, and/or construction staking without the express written consent of TIMMONS GROUP.

S:\331\40013-Regency_at_Heritage_Revision\DWG\Sheet\CD\ROLESVILLE CD\40013-RL-C8.0-LIGHTING PLAN.dwg | Plotted by Sean Hein

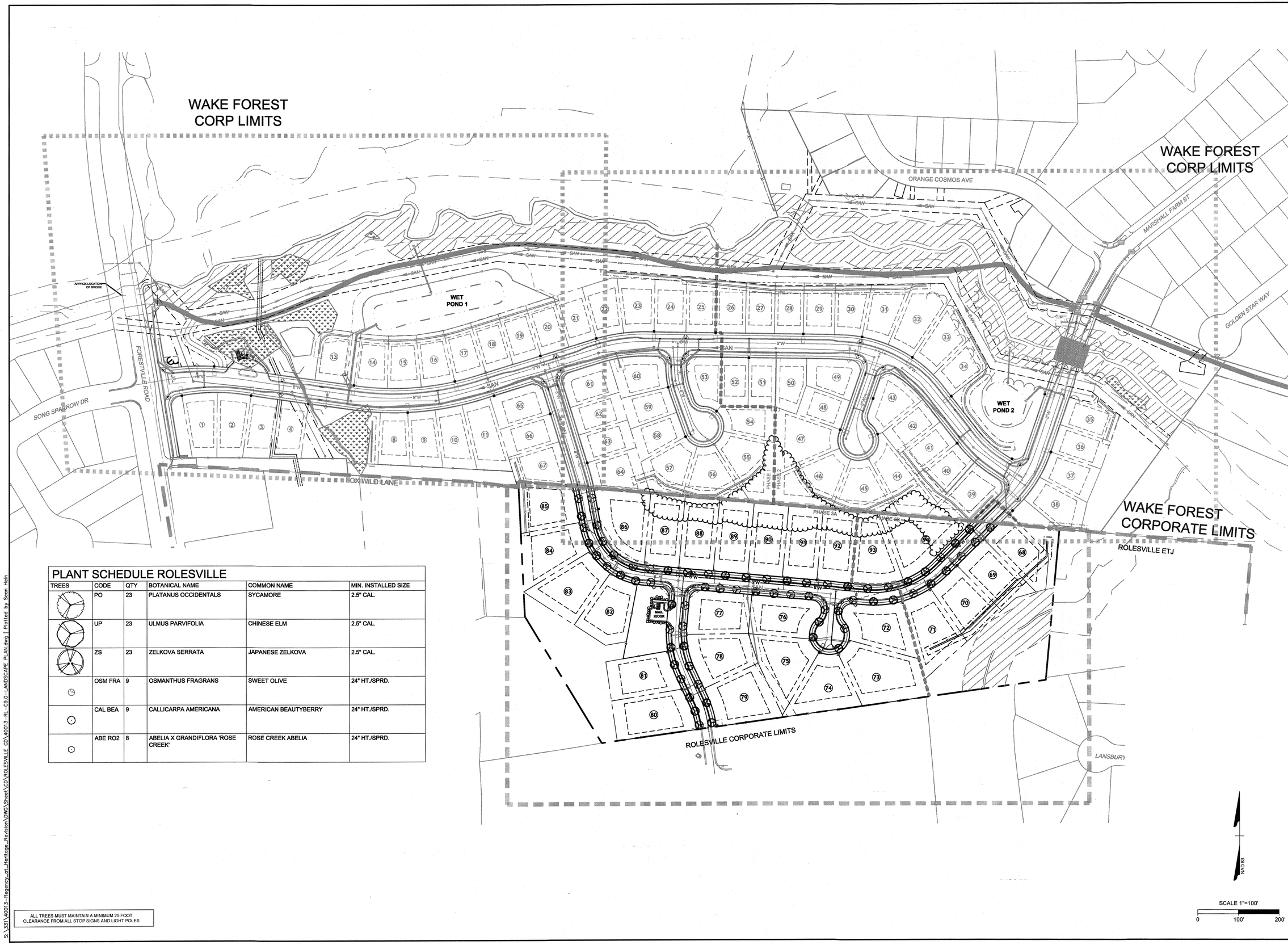

PLANT SCHEDULE ROLESVILLE

TREES	CODE	QTY	BOTANICAL NAME	COMMON NAME	MIN. INSTALLED SIZE
	PO	23	PLATANUS OCCIDENTALS	SYCAMORE	2.5" CAL.
	UP	23	ULMUS PARVIFOLIA	CHINESE ELM	2.5" CAL.
	ZS	23	ZELKOVA SERRATA	JAPANESE ZELKOVA	2.5" CAL.
	OSM FRA	9	OSMANTHUS FRAGRANS	SWEET OLIVE	24" HT./SPRD.
	CAL BEA	9	CALLICARPA AMERICANA	AMERICAN BEAUTYBERRY	24" HT./SPRD.
	ABE RO2	8	ABELIA X GRANDIFLORA 'ROSE CREEK'	ROSE CREEK ABELIA	24" HT./SPRD.

ALL TREES MUST MAINTAIN A MINIMUM 25 FOOT CLEARANCE FROM ALL STOP SIGNS AND LIGHT POLES

S:\331\40013-Regency_at_Heritage_Revision\DWG\Sheet\CD\ROLESVILLE CD\40013-RL-C9.0-LANDSCAPE PLAN.dwg | Plotted by Sean Hein

THIS DRAWING PREPARED AT THE
RALEIGH OFFICE
5410 Trinity Road, Suite 102 | Raleigh, NC 27607
TEL 919.866.4951 FAX 919.833.8124 www.timmons.com

YOUR VISION ACHIEVED THROUGH OURS.

DATE	REVISION DESCRIPTION

DATE	02/04/2020
DRAWN BY	331
DESIGNED BY	331
CHECKED BY	JFC
SCALE	1" = 100'

TIMMONS GROUP

NORTH CAROLINA LICENSE NO. C-1652

REGENCY AT HERITAGE - PHASE 3

ROLESVILLE - WAKE COUNTY - NORTH CAROLINA

OVERALL LANDSCAPE PLAN

JOB NO.	40013
SHEET NO.	C9.0

These plans and associated documents are the exclusive property of TIMMONS GROUP and may not be reproduced in whole or in part and shall not be used for any purpose whatsoever, inclusive, but not limited to construction, bidding, and/or construction staking without the express written consent of TIMMONS GROUP.

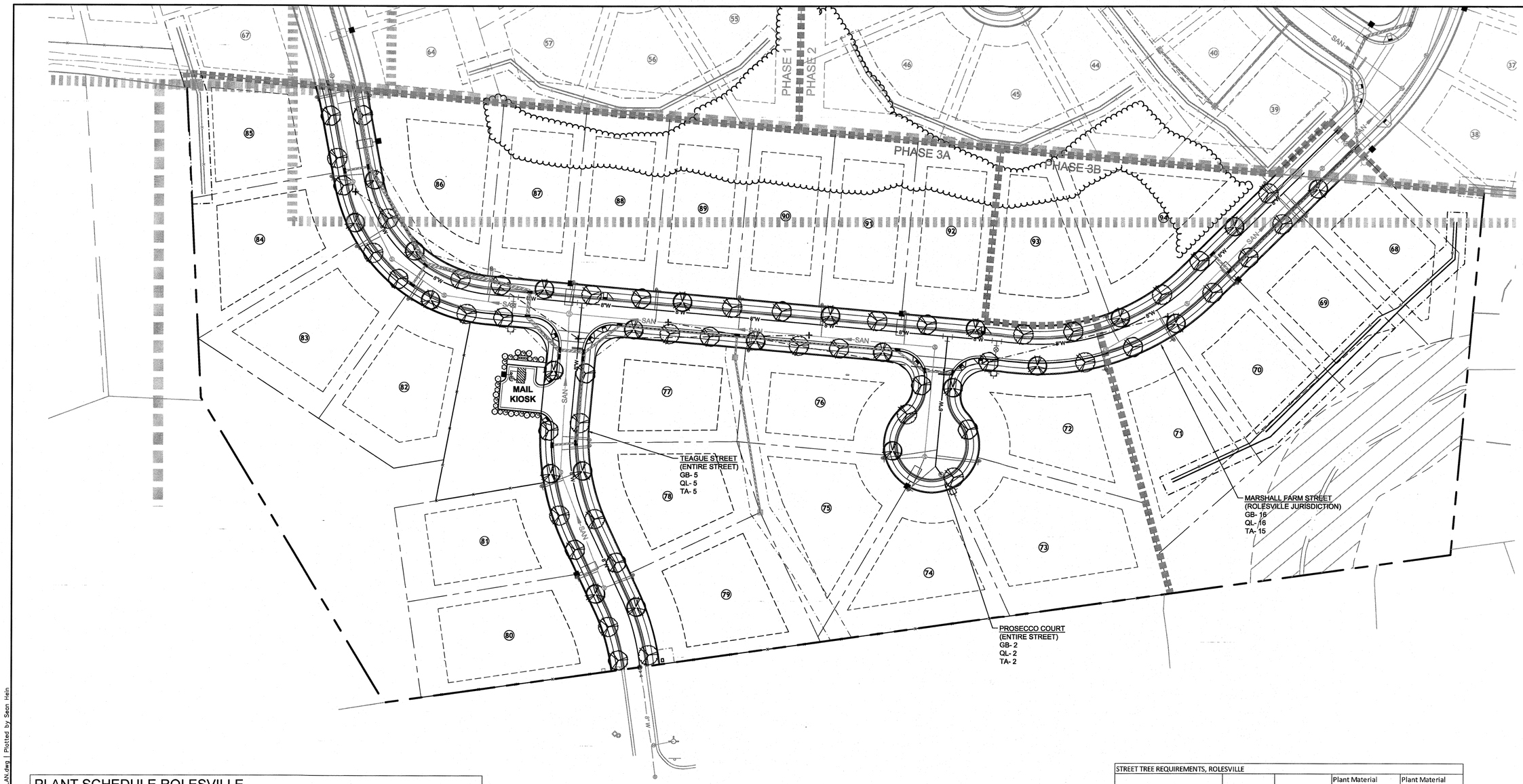

PLANT SCHEDULE ROLESVILLE

TREES	CODE	QTY	BOTANICAL NAME	COMMON NAME	MIN. INSTALLED SIZE
	PO	23	PLATANUS OCCIDENTALS	SYCAMORE	2.5" CAL.
	UP	23	ULMUS PARVIFOLIA	CHINESE ELM	2.5" CAL.
	ZS	23	ZELKOVA SERRATA	JAPANESE ZELKOVA	2.5" CAL.
	OSM FRA	9	OSMANTHUS FRAGRANS	SWEET OLIVE	24" HT./SPRD.
	CAL BEA	9	CALLICARPA AMERICANA	AMERICAN BEAUTYBERRY	24" HT./SPRD.
	ABE RO2	8	ABELIA X GRANDIFLORA 'ROSE CREEK'	ROSE CREEK ABELIA	24" HT./SPRD.

GENERAL NOTES

PRE-CONSTRUCTION

- PRIOR TO THE COMMENCEMENT OF ANY ACTIVITIES REQUIRING A BUILDING OR ZONING PERMIT AN ON-SITE PRE CONSTRUCTION CONFERENCE SHALL TAKE PLACE WITH THE DEVELOPER AND THE ADMINISTRATOR TO REVIEW PROCEDURES FOR THE PROTECTION AND MANAGEMENT OF ALL LANDSCAPE ELEMENTS THAT ARE TO REMAIN AS IDENTIFIED ON THE LANDSCAPE PLAN.
- CONTACT "NC ONE CALL" AT 811 FOR LOCATION OF ALL UTILITY LINES. TREES SHALL BE LOCATED A MINIMUM OF 5 FEET FROM SEWER/WATER CONNECTIONS. NOTIFY LANDSCAPE ARCHITECT OF CONFLICTS.
- VERIFY ALL PLANT MATERIAL QUANTITIES ON THE PLAN PRIOR TO BIDDING, PLANT LIST TOTALS ARE FOR CONVENIENCE ONLY AND SHALL BE VERIFIED PRIOR TO BIDDING.
- PROVIDE PLANT MATERIALS OF QUANTITY, SIZE, GENUS, SPECIES, AND VARIETY INDICATED ON PLANS. ALL PLANT MATERIALS AND INSTALLATION SHALL COMPLY WITH RECOMMENDATIONS AND REQUIREMENTS OF ANSI Z60.1 "AMERICAN STANDARD FOR NURSERY STOCK". IF SPECIFIED PLANT MATERIAL IS NOT OBTAINABLE, SUBMIT PROOF OF NON AVAILABILITY TO THE ARCHITECTS, TOGETHER WITH PROPOSAL FOR USE OF EQUIVALENT MATERIAL.
- PROVIDE AND INSTALL ALL PLANTS AS IN ACCORDANCE WITH DETAILS AND CONTRACT SPECIFICATIONS.

CONSTRUCTION/INSTALLATION

- LANDSCAPE ARCHITECT RESERVES THE RIGHT TO REJECT ANY PLANTS AND MATERIALS THAT ARE IN AN UNHEALTHY OR UNSIGHTLY CONDITION, AS WELL AS PLANTS AND MATERIALS THAT DO NOT CONFORM TO ANSI Z60.1 "AMERICAN STANDARD FOR NURSERY STOCK".
- LABEL AT LEAST ONE TREE AND ONE SHRUB OF EACH VARIETY AND CALIPER WITH A SECURELY ATTACHED, WATERPROOF TAG BEARING THE DESIGNATION OF BOTANICAL AND COMMON NAME.
- INSTALL LANDSCAPE PLANTINGS AT ENTRANCES/EXITS AND PARKING AREAS ACCORDING TO PLANS SO THAT MATERIALS WILL NOT INTERFERE WITH SIGHT DISTANCES.
- CONTRACTOR IS RESPONSIBLE FOR WATERING ALL PLANT MATERIAL DURING INSTALLATION AND UNTIL FINAL INSPECTION AND ACCEPTANCE BY OWNER. CONTRACTOR SHALL NOTIFY OWNER OF CONDITIONS WHICH AFFECTS THE GUARANTEE.
- CONTRACTOR IS PERFORM PRUDENT INSTALLATION OF ALL HARDSCAPE AND PLANT MATERIAL WITHIN 50" RED OAK DRIP LINE. CONTACT LANDSCAPE ARCHITECT FOR QUESTIONS CONCERNING INSTALLATION THAT MAY CAUSE CRITICAL HARM WITH THE INSTALLATION OF HARDSCAPE OR PLANT MATERIAL IN DRIP LINE AREA.

INSPECTIONS/GUARANTEE

- UPON COMPLETION OF LANDSCAPE INSTALLATION, THE LANDSCAPE CONTRACTOR SHALL NOTIFY THE GENERAL CONTRACTOR WHO WILL VERIFY COMPLETENESS, INCLUDING THE REPLACEMENT OF ALL DEAD PLANT MATERIAL. CONTRACTOR IS RESPONSIBLE FOR SCHEDULING A FINAL INSPECTION BY THE LANDSCAPE ARCHITECT.
- ALL EXTERIOR PLANT MATERIALS SHALL BE GUARANTEED FOR ONE FULL YEAR AFTER DATE OF FINAL INSPECTION AGAINST DEFECTS INCLUDING DEATH AND UNSATISFACTORY GROWTH. DEFECTS RESULTING FROM NEGLECT BY THE OWNER, ABUSE OR DAMAGE BY OTHERS, OR UNUSUAL PHENOMENA OR INCIDENTS WHICH ARE BEYOND THE CONTRACTORS CONTROL ARE NOT THE RESPONSIBILITY OF THE CONTRACTOR.
- PLANT MATERIAL QUANTITIES AND SIZES WILL BE INSPECTED FOR COMPLIANCE WITH APPROVED PLANS BY A SITE PLAN REVIEW AGENT OF THE PLANNING DEPARTMENT PRIOR TO THE RELEASE OF THE CERTIFICATE OF OCCUPANCY.
- REMOVE ALL GUY WIRES AND STAKES 12 MONTHS AFTER INSTALLATION.

STREET TREE REQUIREMENTS, ROLESVILLE

Street Name	LF of Drive	Notes	Plant Material Required	Plant Material Provided
Marshall Farm Street	1193	1 canopy tree	24	47
Teague Street	381	every 50 lf	8	15
Prosecco Court	119		2	6
		Total	34	68

S:\331\40013-Regency_at_Heritage_Revision\DWG\Sheet\CD\ROLESVILLE CD\40013-RL-C9.0-LANDSCAPE PLAN.dwg | Plotted by: Sean Hein

NORTH CAROLINA PROFESSIONAL SEAL 026461 ENGINEERING JAMES FITZ MOTTS

THIS DRAWING PREPARED AT THE
RALEIGH OFFICE
5410 Trinity Road, Suite 102 | Raleigh, NC 27607
TEL 919.866.4951 FAX 919.833.8124 www.timmons.com

YOUR VISION ACHIEVED THROUGH OURS.

REVISION DESCRIPTION	DATE

DATE 02/04/2020
DRAWN BY 331
DESIGNED BY 331
CHECKED BY JFC
SCALE 1" = 100'

TIMMONS GROUP

NORTH CAROLINA LICENSE NO. C-1652

REGENCY AT HERITAGE - PHASE 3

ROLESVILLE - WAKE COUNTY - NORTH CAROLINA

LANDSCAPE PLAN

JOB NO. 40013

SHEET NO. C9.1

These plans and associated documents are the exclusive property of TIMMONS GROUP and may not be reproduced in whole or in part and shall not be used for any purpose whatsoever, inclusive, but not limited to construction, bidding, and/or construction staking without the express written consent of TIMMONS GROUP.