TOWN OF ROLESVILLE
PUBLIC WORKS FACILITY

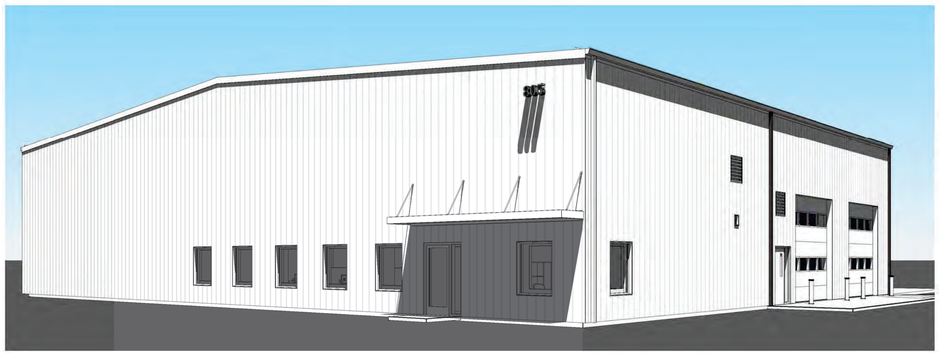

SITE LOCATION MAP

VICINITY MAP

CONTACTS

OWNER:
TOWN OF ROLESVILLE
502 SOUTHTOWN CIRCLE
ROLESVILLE, NC 27571
(919) 556-3506
contact: ERIC MARSH
email: eric.marsh@rolesville.nc.gov

ARCHITECT:
IBI GROUP
421 FAYETTEVILLE ST, SUITE 1609
RALEIGH, NC 27601
(919) 851-4211 EXT. 51519
contact: COLIN MCCARVILLE, AIA
email: colin.mccarville@ibigroup.com

CIVIL ENGINEER:
WITHERS RAVENEL
115 MACKENAN DRIVE
CARY, NC 27511
(919) 469-3340
(919) 467-6008 fax
contact: PAUL DEVLIN
email: pdevlin@withersravenel.com

ELECTRICAL:
IBI GROUP
421 FAYETTEVILLE STREET
SUITE 1609
RALEIGH, NC 27601
(919) 851-4211 x 51505
contact: KEVIN SCHAEFER
email: kevin.schaefer@ibigroup.com

STRUCTURAL ENGINEER:
IBI GROUP
421 FAYETTEVILLE STREET
SUITE 1609
RALEIGH, NC 27601
(919) 851-4211
contact: ROBERT AECK, P.E.
email: robert.aeck@ibigroup.com

MECHANICAL, PLUMBING, & FIRE PROTECTION ENGINEER:
IBI GROUP
421 FAYETTEVILLE STREET
SUITE 1609
RALEIGH, NC 27601
(607) 772-0007 x 52033
contact: DAN IGO
email: dan.igo@ibigroup.com

INDEX OF DRAWINGS

PROJECT DESCRIPTION

NEW SINGLE-STORY PRE-ENGINEERED METAL BUILDING WITH STORAGE AND PM&E EQUIPMENT MEZZANINE TO HOUSE TOWN OF ROLESVILLE PUBLIC WORKS OPERATIONS. BUILDING HOUSES OFFICE AREA FOR 7 STAFF, PLUS WAREHOUSE STORAGE, WORKSHOP, AND SERVICE BAYS FOR MINOR VEHICLE & EQUIPMENT MAINTENANCE SUCH AS CHANGING FLUIDS, AND LAWN MOWER REPAIRS.

CLIENT

Rolesville
Genuine Community • Capital Connection
Est. 1837

ISSUES

ISSUE	ISSUANCE	DATE
A	SD PHASE PRICING PACKAGE	12/10/2021
B	OWNER REVIEW SET	05/05/2022
0	BUILDING PERMIT & BID SET	07/01/2022

CONSULTANTS

WITHERS RAVENEL

WithersRavenel
Engineers | Planners | Surveyors

SEAL

MARK A. HUMIENNY
REGISTERED ARCHITECT
6741
7-01-2022
NORTH CAROLINA
RALEIGH, N.C.

PRIME CONSULTANT

IBI GROUP
421 Fayetteville Street, Suite 1609
Raleigh, NC 27601, USA
tel 919 851 4211
ibigroup.com

PROJECT

ROLESVILLE PUBLIC WORKS

805 E. YOUNG STREET
ROLESVILLE NC

PROJECT NO: 135941	
DRAWN BY: **CM**	CHECKED BY: **MH**
PROJECT MGR: **MH**	APPROVED BY: **MH**
SCALE:	DATE: **07/01/2022**

SHEET TITLE

COVER SHEET

SHEET NUMBER **G000** | ISSUE **0**

BIM 360://135941-Rolesville_Public_Works P2020/135941-Rolesville-ARCH_v20.rvt

SCALE CHECK | 1 in | 10mm

2022-09-26 4:22:15 PM

CODE SUMMARY

2018 APPENDIX B
BUILDING CODE SUMMARY FOR ALL COMMERCIAL PROJECTS
(EXCEPT 1 AND 2-FAMILY DWELLINGS AND TOWNHOUSES)
(Reproduce the following data on the building plans sheet 1 or 2)

Name of Project: TOWN OF ROLESVILLE PUBLIC WORKS
Address: 805 E. YOUNG STREET, ROLESVILLE, NC Zip Code 27571
Owner/Authorized Agent: Eric Marsh Phone # (919) 556 - 3506 E-Mail eric.marsh@rolesville.nc.gov
Owned By: [X] City/County [ ] Private [ ] State
Code Enforcement Jurisdiction: [ ] City_____ [X] County WAKE [ ] State

CONTACT: COLIN MCCCARVILLE, (919) 851-4211 EXT. 51519

DESIGNER	FIRM	NAME	LICENSE #	TELEPHONE #	E-MAIL
Architectural	IBI	Mark Humienny	6741	(919)851-4210	mark.humienny@ibigroup.com
Civil	Withers Ravenel	Paul Devlin	049219	(919)469-3340	pdevlin@withersravenel.com
Electrical	IBI	Kevin Schaefer	034828	(919) 851 4211	kevin.schaefer@ibigroup.com
Fire Alarm				( )	
Plumbing	IBI	Dan Igo	054060	(607)772-0007	dan.igo@ibigroup.com
Mechanical	IBI	Dan Igo	054060	(607)772-0007	dan.igo@ibigroup.com
Sprinkler-Standpipe	IBI	Dan Igo	054060	(607)772-0007	dan.igo@ibigroup.com
Structural	IBI	Robert Aeck	047766	(919)851-4211	robert.aeck@ibigroup.com
Retaining Walls >5' High	N/A			( )	
Other				( )	

("Other" should include firms and individuals such as truss, precast, pre-engineered, interior designers, etc.)

2018 NC BUILDING CODE: [X] New Building [ ] Shell/Core [ ] 1st Time Interior Completions
[ ] Addition [ ] Phased Construction – Shell Core

2018 NC EXISTING BUILDING CODE: (check all that apply) [ ] Prescriptive [ ] Alteration Level I [ ] Historic Property
[ ] Repair [ ] Alteration Level II [ ] Change of Use
[ ] Chapter 14 [ ] Alteration Level III

CONSTRUCTED: (date) _____ **CURRENT OCCUPANCY(S)** (Ch. 3): _____
RENOVATED: (date) _____ **PROPOSED OCCUPANCY(S)** (Ch. 3): _____

OCCUPANCY CATEGORY (Table 1604.5): **Current:** II **Proposed:** II

BASIC BUILDING DATA
Construction Type: (check all that apply) [ ] I-A [ ] I-B [ ] II-A [X] II-B [ ] III-A [ ] III-B [ ] IV [ ] V-A [ ] V-B
Sprinklers: [ ] No [ ] Partial [X] NFPA 13 [ ] NFPA 13R [ ] NFPA 13D
Standpipes: [X] No Class [ ] I [ ] II [ ] III [ ] Wet [ ] Dry
Primary Fire District: [X] No [ ] Yes **Flood Hazard Area:** [ ] No [ ] Yes
Special Inspections Required: [X] No [ ] Yes

GROSS BUILDING AREA TABLE

FLOOR	EXISTING (SQ FT)	NEW (SQ FT)	SUB-TOTAL
3rd Floor			
2nd Floor			
Mezzanine		2,418	2,418
1st Floor		9,708	9,708
Basement			
TOTAL			9,708

NCDOI- 1

ALLOWABLE AREA

Primary Occupancy Classification(s):
Assembly [ ] A-1 [ ] A-2 [ ] A-3 [ ] A-4 [ ] A-5
Business [X]
Educational [ ]
Factory [ ] F-1 Moderate [ ] F-2 Low
Hazardous [ ] H-1 Detonate [ ] H-2 Deflagrate [ ] H-3 Combust [ ] H-4 Health [ ] H-5 HPM
Institutional [ ] I-1 [ ] I-2 [ ] I-3 [ ] I-4
I-1 Condition [ ] 1 [ ] 2
I-2 Condition [ ] 1 [ ] 2
I-3 Condition [ ] 1 [ ] 2 [ ] 3 [ ] 4 [ ] 5
Mercantile [ ]
Residential [ ] R-1 [ ] R-2 [ ] R-3 [ ] R-4
Storage [X] S-1 Moderate [ ] S-2 Low [ ] High-piled
[ ] Parking Garage [ ] Open [ ] Enclosed [X] Repair Garage
Utility and Miscellaneous [ ]
Accessory Occupancy Classification(s): _____
Incidental Uses (Table 509): _____
This separation is not exempt as a Non-Separated Use (see exceptions).
Special Uses (Chapter 4 – List Code Sections): 406.8 REPAIR GARAGE
Special Provisions: (Chapter 5 – List Code Sections): 505.2.1 MEZZANINE AREA LIMITATION
Mixed Occupancy: Select one Separation: Select one Exception: 508.3.3
Select one YES 0
Actual Area of Occupancy A / *Allowable Area of Occupancy A* + *Actual Area of Occupancy B* / *Allowable Area of Occupancy B* ≤ 1
_____ + _____ + ... = _____ ≤ 1.00

STORY NO.	DESCRIPTION AND USE	(A) BLDG AREA PER STORY (ACTUAL)	(B) TABLE 506.2[4] AREA	(C) AREA FOR FRONTAGE INCREASE[1,5]	(D) ALLOWABLE AREA PER STORY OR UNLIMITED[2,3]
1	REPAIR GARAGE & STORAGE	9,675	70,000	17,500	UNLIMITED
1	BUSINESS	2,412	92,000	23,000	UNLIMITED

[1] Frontage area increases from Section 506.2 are computed thus:
a. Perimeter which fronts a public way or open space having 20 feet minimum width = 402 (F)
b. Total Building Perimeter = 402 (P)
c. Ratio (F/P) = 1.0 (F/P)
d. W = Minimum width of public way = 60 (W)
[2] Unlimited area applicable under conditions of Section 507.
[3] Maximum Building Area = total number of stories in the building x D (maximum3 stories) (506.2).
[4] The maximum area of open parking garages must comply with Table 406.5.4. The maximum area of air traffic control towers must comply with Table 412.3.1.
[5] Frontage increase is based on the unsprinklered area value in Table 506.2.

NCDOI- 2

ALLOWABLE HEIGHT

	ALLOWABLE	SHOWN ON PLANS	CODE REFERENCE
Building Height in Feet (Table 504.3)	75	28'-10"	504.3
Building Height in Stories (Table 504.4)	3	1	504.4

[1] Provide code reference if the "Shown on Plans" quantity is not based on Table 504.3 or 504.4.

FIRE PROTECTION REQUIREMENTS

BUILDING ELEMENT	FIRE SEPARATION DISTANCE (FEET)	RATING REQ'D	RATING PROVIDED (W/_____ REDUCTION)	DETAIL # AND SHEET #	DESIGN # FOR RATED ASSEMBLY	SHEET # FOR RATED PENETRATION	SHEET # FOR RATED JOINTS
Structural Frame, including columns, girders, trusses	N/A	0	0				
Bearing Walls							
Exterior							
North	N/A	N/A	N/A				
East	N/A	N/A	N/A				
West	N/A	N/A	N/A				
South	N/A	N/A	N/A				
Interior							
Nonbearing Walls and Partitions							
Exterior walls							
North	>30'-0"	0	0				
East	>30'-0"	0	0				
West	>30'-0"	0	0				
South	>30'-0"	0	0				
Interior walls and partitions		0	0				
Floor Construction Including supporting beams and joists	N/A	N/A					
Floor Ceiling Assembly	N/A	N/A					
Columns Supporting Floors	0	0					
Roof Construction, including supporting beams and joists	0	0					
Roof Ceiling Assembly	0	0					
Columns Supporting Roof	0	0					
Shaft Enclosures - Exit	0	0					
Shaft Enclosures - Other	0	0					
Corridor Separation	0	0					
Occupancy/Fire Barrier Separation	N/A	N/A					
Party/Fire Wall Separation	N/A	N/A					
Smoke Barrier Separation	0	0					
Smoke Partition	0	0					
Tenant/Dwelling Unit/ Sleeping Unit Separation	N/A	N/A					
Incidental Use Separation	0	0					

* Indicate section number permitting reduction

NCDOI- 3

PERCENTAGE OF WALL OPENING CALCULATIONS

FIRE SEPARATION DISTANCE (FEET) FROM PROPERTY LINES	DEGREE OF OPENINGS PROTECTION (TABLE 705.8)	ALLOWABLE AREA (%)	ACTUAL SHOWN ON PLANS (%)
30+	UP, S	N.L.	17%

LIFE SAFETY SYSTEM REQUIREMENTS

Emergency Lighting: [X] Yes [ ] No
Exit Signs: [X] Yes [ ] No
Fire Alarm: [X] Yes [ ] No
Smoke Detection Systems: [X] Yes [ ] No
Carbon Monoxide Detection: [X] Yes [ ] No

LIFE SAFETY PLAN REQUIREMENTS

Life Safety Plan Sheet #: G002

[ ] Fire and/or smoke rated wall locations (Chapter 7)
[ ] Assumed and real property line locations (if not on the site plan)
[ ] Exterior wall opening area with respect to distance to assumed property lines (705.8)
[X] Occupancy Use for each area as it relates to occupant load calculation (Table 1004.1.2)
[X] Occupant loads for each area
[X] Exit access travel distances (1017)
[X] Common path of travel distances (Tables 1006.2.1 & 1006.3.2(1))
[ ] Dead end lengths (1020.4)
[X] Clear exit widths for each exit door
[X] Maximum calculated occupant load capacity each exit door can accommodate based on egress width (1005.3)
[X] Actual occupant load for each exit door
[ ] A separate schematic plan indicating where fire rated floor/ceiling and/or roof structure is provided for purposes of occupancy separation
[ ] Location of doors with panic hardware (1010.1.10)
[ ] Location of doors with delayed egress locks and the amount of delay (1010.1.9.7)
[ ] Location of doors with electromagnetic egress locks (1010.1.9.9)
[ ] Location of doors equipped with hold-open devices
[ ] Location of emergency escape windows (1030)
[X] The square footage of each fire area (202)
[ ] The square footage of each smoke compartment for Occupancy Classification I-2 (407.5)
[ ] Note any code exceptions or table notes that may have been utilized regarding the items above

NCDOI- 4

ACCESSIBLE DWELLING UNITS N/A
(SECTION 1107)

TOTAL UNITS	ACCESSIBLE UNITS REQUIRED	ACCESSIBLE UNITS PROVIDED	TYPE A UNITS REQUIRED	TYPE A UNITS PROVIDED	TYPE B UNITS REQUIRED	TYPE B UNITS PROVIDED	TOTAL ACCESSIBLE UNITS PROVIDED

ACCESSIBLE PARKING
(SECTION 1106)

LOT OR PARKING AREA	TOTAL # OF PARKING SPACES REQUIRED	TOTAL # OF PARKING SPACES PROVIDED	# OF ACCESSIBLE SPACES PROVIDED: REGULAR WITH 5' ACCESS AISLE	VAN SPACES WITH 132" ACCESS AISLE	VAN SPACES WITH 8' ACCESS AISLE	TOTAL # ACCESSIBLE PROVIDED
	11	11			1	1
TOTAL						

PLUMBING FIXTURE REQUIREMENTS
(TABLE 2902.1)

USE		WATERCLOSETS MALE	WATERCLOSETS FEMALE	WATERCLOSETS UNISEX	URINALS	LAVATORIES MALE	LAVATORIES FEMALE	LAVATORIES UNISEX	SHOWERS /TUBS	DRINKING FOUNTAINS REGULAR	DRINKING FOUNTAINS ACCESSIBLE
SPACE	EXIST'G	N/A	N/A	N/A							
	NEW	1	2		1	1	1		2	1	1
	REQ'D	1	1			1	1			1	1

SPECIAL APPROVALS

Special approval: (Local Jurisdiction, Department of Insurance, OSC, DPI, DHHS, etc., describe below)

_____

_____

NCDOI- 5

ENERGY SUMMARY
THIS SECTION FOR NEW, ADDITIONS, CHANGE OF USE, AND INTERIOR COMPLETION

ENERGY REQUIREMENTS:
The following data shall be considered minimum and any special attribute required to meet the energy code shall also be provided. Each Designer shall furnish the required portions of the project information for the plan data sheet. If energy cost budget method, state the annual energy cost budget vs. allowable annual energy cost budget.

Method of Compliance: [X] Prescriptive [ ] Performance [ ] Energy Cost Budget

THERMAL ENVELOPE:

Roof/ceiling Assembly (each assembly):
Description of assembly METAL ROOFING, FIBERGLASS INSULATION, VAPOR BARRIER
U-Value of total assembly 0.033
R-Value of insulation 30
Skylights in each assembly
U-Value of skylight 0.27
Total square footage of skylights in each assembly 67

Exterior Walls (each assembly):
Description of assembly METAL SIDING, DRYWALL, R13 & R 11 BATT INSULATION
U-Value of total assembly 0.042
R-Value of insulation 24
Openings (windows or doors with glazing)
U-Value of assembly 0.45 MAX
Solar heat gain coefficient 0.25
Projection factor _____
Low-e required, if applicable YES
Door R-Values 7

Walls adjacent to unconditioned space (each assembly): N/A
Description of assembly _____
U-Value of total assembly _____
R-Value of insulation _____
Openings (windows or doors with glazing)
U-Value of assembly _____
Low-e required, if applicable _____
Door R-Values _____

Walls below grade (each assembly): N/A
Description of assembly _____
U-Value of total assembly _____
R-Value of insulation _____

Floors over unconditioned space (each assembly): N/A
Description of assembly _____
U-Value of total assembly _____
R-Value of insulation _____

Floors slab on grade (each assembly):
Description of assembly CIP CONC, VAPOR BARRIER, STONE
U-Value of total assembly N/R
R-Value of insulation N/R
Horizontal/Vertical requirement N/R
Slab heated N/A

NOT REQ. / NCEC 2018, TABLE C402.1.3

NCDOI- 6

2018 APPENDIX B
BUILDING CODE SUMMARY FOR ALL COMMERCIAL PROJECTS
STRUCTURAL DESIGN
(PROVIDE ON SHEET 1 OR 2 OF THE STRUCTURAL SHEETS)

DESIGN LOADS:

Importance Factors: Wind (I_W) _____ Snow (I_S) _____ Seismic (I_E) _____

SEE STRUCTURAL DRAWINGS

Live Loads: Roof _____ psf Mezzanine _____ psf Floor _____ psf

Ground Snow Load: _____ psf

Wind Load: Basic Wind Speed _____ mph (ASCE-7) Exposure Category _____

SEISMIC DESIGN CATEGORY: [ ] A [ ] B [ ] C [X] D
Provide the following Seismic Design Parameters:
Occupancy Category (Table 1604.5) [ ] I [ ] II [ ] III [ ] IV
Spectral Response Acceleration S_S _____ %g S_1 _____ %g
Site Classification (ASCE 7) [ ] A [ ] B [ ] C [ ] D [ ] E [ ] F
Data Source: [ ] Field Test [ ] Presumptive [ ] Historical Data
Basic structural system (check one)
[ ] Bearing Wall [ ] Dual w/Special Moment Frame
[ ] Building Frame [ ] Dual w/Intermediate R/C or Special Steel
[ ] Moment Frame [ ] Inverted Pendulum
Analysis Procedure: [ ] Simplified [ ] Equivalent Lateral Force [ ] Dynamic
Architectural, Mechanical, Components anchored? [ ] Yes [ ] No

LATERAL DESIGN CONTROL: Earthquake [ ] Wind [ ]

SOIL BEARING CAPACITIES:
Field Test (provide copy of test report) 2,000 psf
Presumptive Bearing capacity _____ psf
Pile size, type, and capacity _____

NCDOI- 7

2018 APPENDIX B
BUILDING CODE SUMMARY FOR ALL COMMERCIAL PROJECTS
MECHANICAL DESIGN
(PROVIDE ON THE MECHANICAL SHEETS IF APPLICABLE)

MECHANICAL SUMMARY

MECHANICAL SYSTEMS, SERVICE SYSTEMS AND EQUIPMENT

Thermal Zone
winter dry bulb: _____
summer dry bulb: _____

SEE MECHANICAL DRAWINGS

Interior design conditions
winter dry bulb: _____
summer dry bulb: _____
relative humidity: _____

Building heating load: _____

Building cooling load: _____

Mechanical Spacing Conditioning System
Unitary
description of unit: _____
heating efficiency: _____
cooling efficiency: _____
size category of unit: _____
Boiler
Size category. If oversized, state reason.: _____
Chiller
Size category. If oversized, state reason.: _____

List equipment efficiencies: _____

NCDOI- 8

2018 APPENDIX B
BUILDING CODE SUMMARY FOR ALL COMMERCIAL PROJECTS
ELECTRICAL DESIGN
(PROVIDE ON THE ELECTRICAL SHEETS IF APPLICABLE)

ELECTRICAL SUMMARY

ELECTRICAL SYSTEM AND EQUIPMENT

Method of Compliance:
Energy Code: [ ] Prescriptive [ ] Performance
ASHRAE 90.1: [ ] Prescriptive [ ] Performance

SEE ELECTRICAL DRAWINGS

Lighting schedule (each fixture type)
lamp type required in fixture
number of lamps in fixture
ballast type used in the fixture
number of ballasts in fixture
total wattage per fixture
total interior wattage specified vs. allowed (whole building or space by space)
total exterior wattage specified vs. allowed

Additional Prescriptive Compliance
[ ] 506.2.1 More Efficient Mechanical Equipment
[ ] 506.2.2 Reduced Lighting Power Density
[ ] 506.2.3 Energy Recovery Ventilation Systems
[ ] 506.2.4 Higher Efficiency Service Water Heating
[ ] 506.2.5 On-Site Supply of Renewable Energy
[ ] 506.2.6 Automatic Daylighting Control Systems

NCDOI- 9

CLIENT
Rolesville
Genuine Community • Capital Connection
Est. 1837

ISSUES

ISSUE	ISSUANCE	DATE
A	SD PHASE PRICING PACKAGE	12/10/2021
B	OWNER REVIEW SET	05/05/2022
0	BUILDING PERMIT & BID SET	07/01/2022

CONSULTANTS
WITHERS RAVENEL
WithersRavenel
Engineers | Planners | Surveyors

SEAL
MARK A. HUMIENNY
REGISTERED ARCHITECT
6741
7-01-2022
NORTH CAROLINA
RALEIGH, N.C.

PRIME CONSULTANT
IBI GROUP
421 Fayetteville Street, Suite 1609
Raleigh, NC 27601, USA
tel 919 851 4211
ibigroup.com

PROJECT
ROLESVILLE PUBLIC WORKS
805 E. YOUNG STREET
ROLESVILLE NC

PROJECT NO: 135941	
DRAWN BY: CM	CHECKED BY: MH
PROJECT MGR: MH	APPROVED BY: MH
SCALE:	DATE: 07/01/2022

SHEET TITLE
CODE SUMMARY

SHEET NUMBER G001 ISSUE 0

BIM 360://135941-Rolesville_Public_Works R2020/135941-Rolesville-ARCH_v20.rvt
SCALE CHECK 10mm 1 in

2022-09-26 4:22:15 PM

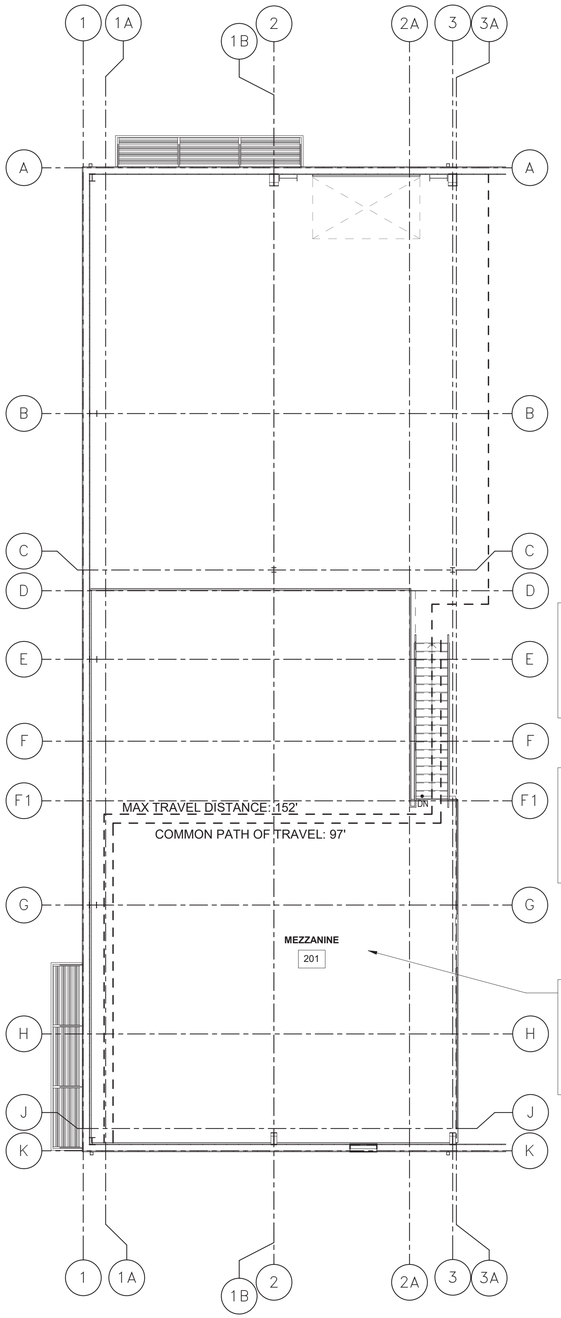

2 G002 LIFE SAFETY MEZZANINE
Scale: 1/8" = 1'-0"

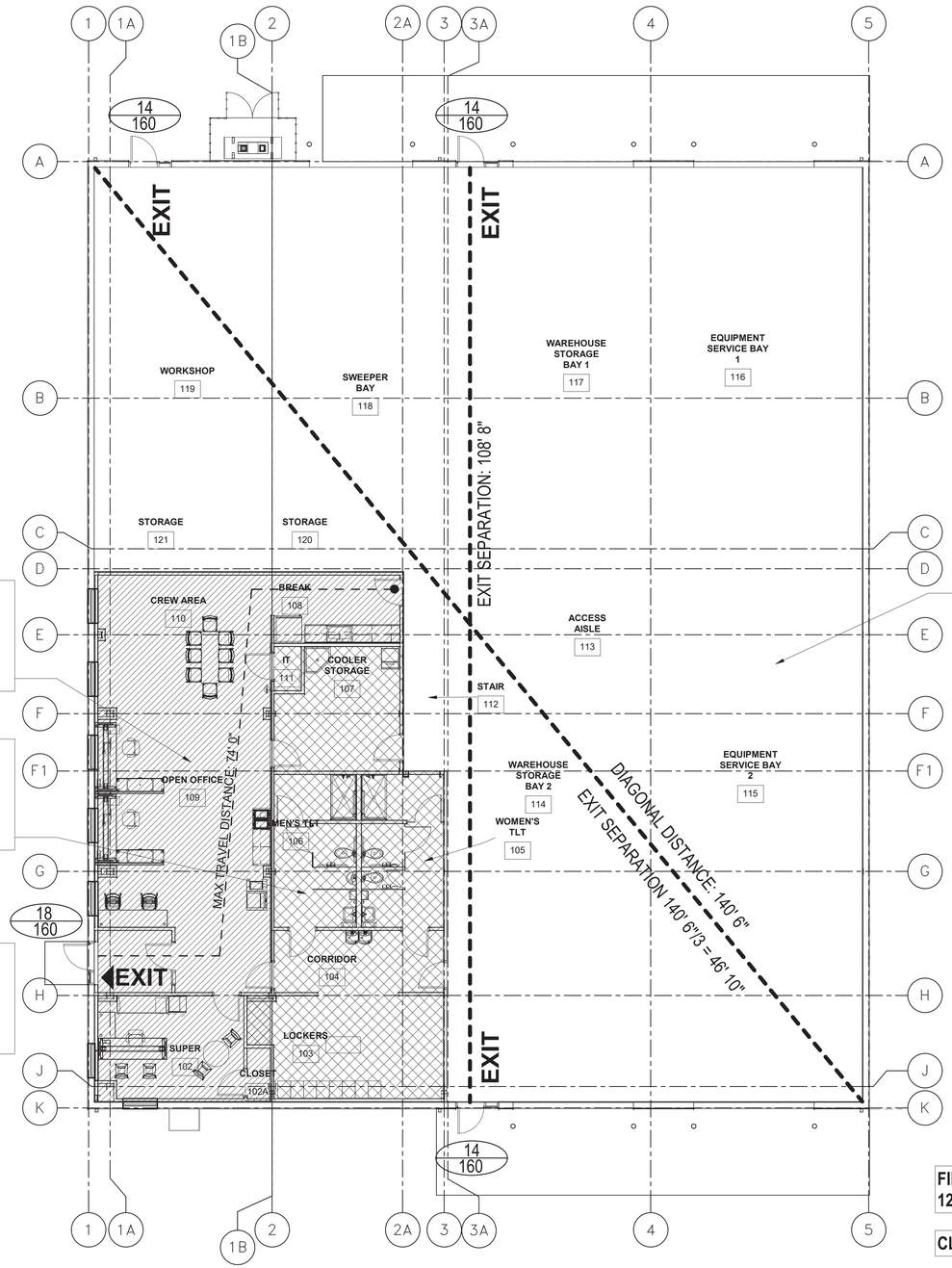

1 G002 LIFE SAFETY PLAN
Scale: 1/8" = 1'-0"

FIRE AREA (FIRST FLOOR + MEZZANINE) : 12,126 SF

CLEAR EXIT WIDTH OF SINGLE DOOR: 32"

LSP NOTES

1. FOR THE PURPOSES OF SHOWING OCCUPANTS SERVED BY EXITS, INDIVIDUAL AREA OCCUPANT TOTALS HAVE BEEN ROUNDED UP PER SPACE.

2. UNLESS OTHERWISE NOTED, ALL INTERIOR SINGLE DOORS HAVE 32" CLEAR WIDTH. ALL DOUBLE DOORS HAVE 64" CLEAR WIDTH.

3. BUILDING IS SPRINKLERED. ALLOWABLE TRAVEL DISTANCE PER TABLE 1016.1 FOR THIS BUILDING= 250

LEGEND

OCCUPANCY GROUPS

- STORAGE OCCUPANCY (S-1) REPAIR GARAGE
- STORAGE OCCUPANCY (S-1) STORAGE/LOCKERS
- BUSINESS OCCUPANCY B - OFFICE AREA

EXIT OCCUPANT LOADING

EXIT OCC.LOAD / EXIT CAPACITY

CLIENT

Rolesville
Genuine Community • Capital Connection
Est. 1837

ISSUES

ISSUE	ISSUANCE	DATE
A	SD PHASE PRICING PACKAGE	12/10/2021
B	OWNER REVIEW SET	05/05/2022
0	BUILDING PERMIT & BID SET	07/01/2022

KEYPLAN

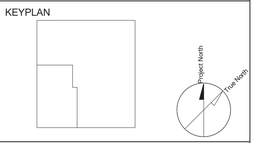

CONSULTANTS

WITHERS RAVENEL

WithersRavenel
Engineers | Planners | Surveyors

SEAL

PRIME CONSULTANT

IBI GROUP
421 Fayetteville Street, Suite 1609
Raleigh, NC 27601, USA
tel 919 851 4211
ibigroup.com

PROJECT

ROLESVILLE PUBLIC WORKS

805 E. YOUNG STREET
ROLESVILLE NC

PROJECT NO: 135941	
DRAWN BY: ST,CM	CHECKED BY: MH
PROJECT MGR: MH	APPROVED BY: MH
SCALE: As indicated	DATE: 07/01/2022

SHEET TITLE

LIFE SAFETY PLAN

SHEET NUMBER G002

ISSUE 0

2022-09-06 5:23:27 PM

BIM 360://135941-Rolesville_Public_Works R2020/135941-Rolesville-ARCH_v20.rvt

SCALE CHECK 10mm 1 in

PROJECT # SP 22-02

SITE PLAN & CONSTRUCTION DRAWINGS FOR
ROLESVILLE PUBLIC WORKS FACILITY

805 EAST YOUNG STREET
ROLESVILLE, NC, 27571

JULY 1, 2022

SITE PLAN & CONSTRUCTION DRAWINGS FOR ROLESVILLE
WR PROJECT NO. 022107.10.00

VICINITY MAP
1"=800'

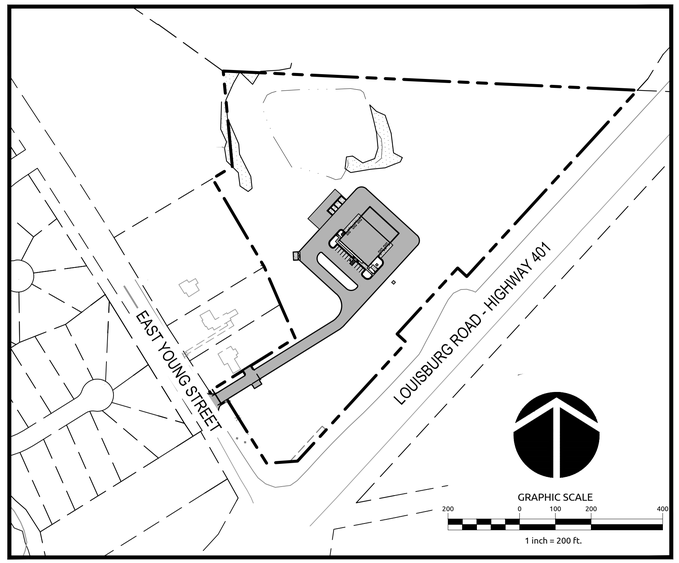

INDEX OF SHEETS

SITE DATA TABLE

PROPERTY INFORMATION:

PARCEL ADDRESS:	805 E YOUNG ST ROLESVILLE, NC 27571
PIN:	1768381703
REID:	0060852
OWNER NAME:	TOWN OF ROLESVILLE
OWNER ADDRESS:	502 SOUTHTOWN CIRCLE ROLESVILLE, NC 27571
OWNER CONTACT:	KELLY ARNOLD
OWNER PHONE:	(919) 556-3506
ARCHITECT NAME:	IBI GROUP
ARCHITECT ADDRESS:	421 FAYETTEVILLE ST RALEIGH, NC 27601
ARCHITECT CONTACT:	MARK HUMIENNY
ARCHITECT PHONE:	(919) 851-4210
ZONING:	BT
ACREAGE:	15.22 ACRES

SETBACKS:

E YOUNG ST:	30'
HWY 401:	15'
REAR:	35'
ADJACENT LOTS:	15'

EXISTING IMPERVIOUS AREA:	0.03 ACRES
PROPOSED IMPERVIOUS AREA:	1.79 ACRES
PROPOSED DENSITY:	11.76%
EXISTING USE:	VACANT
PROPOSED USE:	GOVERNMENT OFFICE/FLEX
EXISTING BUILDING AREA:	0 SF
PROPOSED BUILDING AREA:	±10,200 SF
PROPOSED BUILDING HEIGHT:	24'
PARKING SPACES REQUIRED:	±2653 SF GOVERNMENT OFFICE @ 2.5/1000SF = 7 SPACES ±7,089 SF WAREHOUSE @ 0.5/1000SF = 4 SPACES
PARKING SPACES PROVIDED:	11 SPACES
BICYCLE PARKING REQUIRED:	±9,742 SF GROSS FLOOR AREA @ 1/5000SF = 2 SPACES
BICYCLE PARKING PROVIDED:	2 SPACES
OPEN SPACE REQUIRED:	SMALL (500 SF - 1 ACRE)
OPEN SPACE PROVIDED:	14,772 SF
PEDESTRIAN AMENITIES PROVIDED:	4
PICNIC TABLE:	2
BENCH:	1
GRILL (FOCAL POINT):	1

PORTION OF SITE IS WITHIN NON-CRITICAL WATER SUPPLY WATER SHED WSO-2NC PER WAKE COUNTY GIS ACCESSED 2/10/2022.

PROPERTY DOES NOT FALL WITHIN FEMA FLOODPLAIN BOUNDARY PER FEMA FIRM MAP 3720176800J DATED 5/2/2006.

DISTURBED AREA:	±4.9 ACRES

DEVELOPER/OWNER

TOWN OF ROLESVILLE
502 SOUTHTOWN CIRCLE
ROLESVILLE, NC 27571
(919) 556-3506

ATTN: KELLY ARNOLD

SEAL

NORTH CAROLINA PROFESSIONAL SEAL 049219 ENGINEER PAUL DEVLIN
7/1/2022

PREPARED BY:

WithersRavenel
Engineers | Planners

137 S Wilmington Street | Suite 200 | Raleigh, NC 27601 | t: 919.469.3340 | license #: F-1479 | www.withersravenel.com

ATTENTION CONTRACTORS

The ***Construction Contractor*** responsible for the extension of water, sewer, and/or reuse, as approved in these plans, is responsible for ***contacting*** the ***Public Utilities Department*** at ***(919) 996-4540*** at least ***twenty four hours*** prior to beginning any of their construction.

Failure to notify both ***City Departments*** in advance of beginning construction, will result in the issuance of ***monetary fines***, and require reinstallation of any water or sewer facilities not inspected as a result of this notification failure.

Failure to call for ***Inspection***, ***Install a Downstream Plug***, have ***Permitted Plans*** on the ***Jobsite***, or any other ***Violation*** of ***City of Raleigh Standards*** will result in a ***Fine and Possible Exclusion*** from future work in the ***City of Raleigh***.

Rolesville
Genuine Community • Capital Connection
Est. 1837

APPROVED
Case: _____
Date: _____

_____
Town of Rolesville
Planning Department

EROSION CONTROL, STORMWATER AND FLOODPLAIN MANAGEMENT

APPROVED
EROSION CONTROL ☐ S-_____
STORMWATER MGMT. ☐ S-_____
FLOOD STUDY ☐ S-_____
DATE_____

WAKE COUNTY ENVIRONMENTAL SERVICES
ENVIRONMENTAL CONSULTANT SIGNATURE

Public
Sewer Collection / Extension System
The City of Raleigh consents to the connection and extension of the City's public sewer system as shown on this plan. The material and Construction methods used for this project shall conform to the standards and specifications of the City's Public Utilities Handbook.

City of Raleigh
Public Utilities Department Permit # S-5071

Authorization to Construct See digital signature

CITY OF RALEIGH - PLANS AUTHORIZED FOR CONSTRUCTION

Plans for the proposed use have been reviewed for general compliance with applicable codes. This limited review, and authorization for construction is not to be considered to represent total compliance with all legal requirements for development and construction. The property owner, design consultants, and contractors are each responsible for compliance with all applicable City, State and Federal laws. This specific authorization below is not a permit, nor shall it be construed to permit any violation of City, State or Federal Law. All Construction must be in accordance with all Local, State, and Federal Rules and Regulations. This approval of this electronic document is only valid if the document has not been modified and the digital signature below is valid:

City of Raleigh Development Approval _____

GENERAL NOTES:

1. PROPERTY BOUNDARY SHOWN AS PROVIDED BY WITHERSRAVENEL, DATED APRIL 2021.
2. TOPOGRAPHIC SURVEY SHOWN AS PROVIDED BY WITHERSRAVENEL, DATED APRIL 2021. SUPPLEMENTED BY WITHERSRAVENEL IN FEBRUARY 2022.
3. TREE SURVEY SHOWN AS PROVIDED BY WITHERSRAVENEL, DATED OCTOBER 2021.
4. WETLANDS SHOWN AS PROVIDED BY WITHERSRAVENEL, DATED JULY 2020.
5. PROPERTY DOES NOT FALL WITHIN FEMA FLOODPLAIN BOUNDARY PER FEMA FIRM MAP 3720176800J DATED 5/2/2006.
6. SOIL TYPES INCLUDE WeB, W, HeB PER WAKE COUNTY GIS ACCESSED 2/10/2022.
7. PORTION OF SITE IS WITHIN NON-CRITICAL WATER SUPPLY WATER SHED WSO-2NC PER WAKE COUNTY GIS ACCESSED 2/10/2022.
8. ALL CONSTRUCTION SHALL BE IN ACCORDANCE WITH MUNICIPAL REQUIREMENTS AND NCDOT STANDARD DETAILS AND SPECIFICATIONS, LATEST REVISIONS, AS APPLICABLE.
9. WORK ON THIS PROJECT SHALL CONFORM TO THESE PLANS, THE LATEST EDITIONS OF THE NORTH CAROLINA DEPARTMENT OF TRANSPORTATION (NCDOT) ROAD AND BRIDGE SPECIFICATIONS, THE NCDOT ROAD AND BRIDGE STANDARDS, THE NORTH CAROLINA EROSION AND SEDIMENT CONTROL HANDBOOK, THE NORTH CAROLINA EROSION AND SEDIMENT CONTROL REGULATIONS, MUNICIPAL STANDARDS AND SPECIFICATIONS, ANY GEOTECHNICAL REPORTS, AND ANY OTHER APPLICABLE DESIGN STANDARDS. IN THE EVENT OF CONFLICT BETWEEN ANY OF THESE STANDARDS, SPECIFICATIONS, OR PLANS, THE MOST STRINGENT SHALL GOVERN, UNLESS OTHERWISE NOTED IN THESE PLANS.
10. ANY DISCREPANCIES, INCONSISTENCIES OR AMBIGUITIES FOUND BETWEEN THE DRAWINGS, SPECIFICATIONS, AND SITE CONDITIONS SHALL BE IMMEDIATELY REPORTED TO THE ENGINEER IN WRITING AND PRIOR TO BIDDING IF APPLICABLE. WORK DONE BY THE CONTRACTOR AFTER THE DISCOVERY OF SUCH DISCREPANCIES, INCONSISTENCIES, OR AMBIGUITIES WITHOUT WRITTEN CLARIFICATION FROM THE ENGINEER AND APPROVAL BY OWNER SHALL BE DONE AT THE CONTRACTOR'S RISK.
11. THE CONTRACTOR SHALL BE SOLELY RESPONSIBLE FOR ALL JOBSITE SAFETY DURING ALL PHASES OF CONSTRUCTION. ALL WORK SHALL COMPLY WITH MUNICIPAL, COUNTY AND STATE REGULATIONS, AND O.S.H.A. STANDARDS. CONTRACTOR SHALL COMPLY WITH THE LATEST REVISIONS AND INTERPRETATIONS OF THE DEPARTMENT OF LABOR SAFETY AND HEALTH REGULATIONS FOR CONSTRUCTION PROMULGATED UNDER THE OCCUPATIONAL SAFETY AND HEALTH ACT (OSHA).
12. THE CONTRACTOR IS RESPONSIBLE FOR HORIZONTALLY AND VERTICALLY LOCATING, AND SUBSEQUENTLY PROTECTING, ALL PUBLIC OR PRIVATE UTILITIES (SHOWN OR NOT SHOWN) THAT LIE IN OR ADJACENT TO THE PROJECT SITE. THE CONTRACTOR SHALL CALL “811” FOR PROPER IDENTIFICATION OF EXISTING UTILITIES AT LEAST 48 HOURS PRIOR TO ANY DEMOLITION, GRADING, OR CONSTRUCTION ACTIVITY. THE CONTRACTOR SHALL REPAIR, AT HIS OWN EXPENSE, ANY EXISTING UTILITIES DAMAGED DURING CONSTRUCTION.
13. THE CONTRACTOR SHALL PROTECT ALL EXISTING SITE ELEMENTS, INCLUDING BUT NOT LIMITED TO SIGNS, ROADWAYS, PATHS, STRUCTURES, ELECTRICAL, COMMUNICATION, AND OTHER DRY UTILITIES, WET UTILITIES (SEWER, WATER, STORM SEWER), NATURAL VEGETATION, AND OTHER EXISITNG PROPERTY ITEMS, DURING ALL CONSTRUCTION PHASES. THE CONTRACTOR SHALL REPAIR, AT HIS OWN EXPENSE, ANY EXISTING ITEMS DAMAGED DURING CONSTRUCTION.
14. CONTRACTOR SHALL MAKE EVERY EFFORT TO SAVE PROPERTY IRONS, MONUMENTS, OTHER PERMANENT POINTS AND LINES OF REFERENCE AND CONSTRUCTION STAKES. A LICENSED LAND SURVEYOR AT THE CONTRACTOR'S EXPENSE SHALL REPLACE PROPERTY IRONS, MONUMENTS, AND OTHER PERMANENT POINTS OF REFERENCE DESTROYED BY THE CONTRACTOR.
15. TRAFFIC CONTROL ON PUBLIC STREETS IS THE RESPONSIBILITY OF THE CONTRACTOR AND SHALL BE IN CONFORMANCE WITH THESE PLANS, THE “MANUAL OF UNIFORM TRAFFIC CONTROL DEVICES,” AND/OR AS FURTHER DIRECTED BY THE MUNICIPALITY AND/OR NCDOT.
16. CONTRACTOR SHALL PROVIDE, ERECT, AND MAINTAIN SUITABLE BARRIERS, FENCES, SIGNS, FLAGMEN, WATCHMEN, AND OTHER ADEQUATE PROTECTION AS NECESSARY TO ENSURE THE SAFETY OF THE PUBLIC AND THOSE ENGAGED IN THE CONSTRUCTION WORK. ALL SAFETY MEASURES SHALL BE MAINTAINED AT ALL TIMES DURING THE PROGRESS OR TEMPORARY SUSPENSION OF WORK. CONSTRUCTION SIGNING SHALL BE CLEARLY LEGIBLE, PROMINENTLY DISPLAYED, AND IN ACCORDANCE WITH THE LATEST EDITION OF "CONSTRUCTION AND MAINTENANCE OPERATIONS SUPPLEMENT TO THE MANUAL ON UNIFORM TRAFFIC CONTROL DEVICES", UNLESS OTHERWISE NOTED ON THE PLANS.
17. CONTRACTOR SHALL PLAN AND CONSTRUCT WORK IN ORDER TO CAUSE MINIMUM INCONVENIENCE TO THE OWNER AND THE PUBLIC AND SHALL COORDINATE WITH AND OBTAIN APPROVAL FROM STATE AND LOCAL REGULATORY AGENCIES ON TRAFFIC CONTROL PLANS.
18. ALL MATERIAL CLEARED OR DEMOLISHED BY THE CONTRACTOR IN ORDER TO CONSTRUCT THE WORK SHALL BECOME THE PROPERTY OF THE CONTRACTOR AND SHALL BE PROPERLY DISPOSED OF OFF-SITE AND IF APPLICABLE AT AN APPROVED DISPOSAL FACILITY.
19. THE CONTRACTOR SHALL HAVE A COMPLETE SET OF CONTRACT DOCUMENTS AS WELL AS ALL PERMIT APPROVALS AND EASEMENTS ON THE JOB SITE AT ALL TIMES.
20. WETLANDS SHOWN WILL HAVE DEED RESTRICTION PROHIBITING GRADING OR FILLING OF LOTS UNLESS SPECIFICALLY PERMITTED BY THE USACOE & NCEDNR-DWQ.
21. DELINEATED WETLAND AREAS SHALL NOT BE CLEARED, DRAINED, OR OTHERWISE DISTURBED UNLESS SPECIFICALLY PERMITTED BY THE U.S. ARMY CORPS OF ENGINEERS AND NCDENR-DWQ.
22. CONSTRUCTION STAKEOUT FOR THIS PROJECT MAY BE PERFORMED BY THE CONTRACTOR, USING A DIGITAL (CADD) FILE PROVIDED BY THE ENGINEER. THE CONTRACTOR SHALL NOTIFY THE ENGINEER IMMEDIATELY OF ANY DISCREPANCIES FOUND BETWEEN THE DIGITAL FILE AND THE CRITICAL STAKING DIMENSIONS SHOWN ON THIS PLAN (I.E. PAVEMENT WIDTHS, CURB RADII, BUILDING SETBACKS, BUILDING FOOTPRINTS, ETC.). ANY MODIFICATIONS MADE BY OTHERS TO THE DIGITAL FILE PROVIDED BY THE ENGINEER SHALL RENDER IT VOID.
23. CONTRACTOR SHALL FURNISH AND INSTALL ALL PAVEMENT MARKINGS FOR FIRE LANES, PARKING STALLS, ACCESSIBLE PARKING SYMBOLS, AND MISCELLANEOUS STRIPING WITHIN PARKING LOT AND AROUND BUILDINGS AS SHOWN ON THE PLANS. ALL PAINT FOR PAVEMENT MARKINGS SHALL ADHERE TO NCDOT STANDARDS, UNLESS NOTED OTHERWISE.
24. TESTING OF MATERIAL REQUIRED FOR THE CONSTRUCTION OF THE IMPROVEMENTS SHALL BE PERFORMED BY AN APPROVED AGENCY FOR TESTING MATERIALS. THE NOMINATION OF THE TESTING LAB AND THE PAYMENT OF EACH TESTING SERVICES SHALL BE MADE BY THE OWNER. IT SHALL BE THE CONTRACTOR’S RESPONSIBILITY TO SHOW BY STANDARD TESTING PROCEDURES THAT THE WORK CONSTRUCTED MEETS THE REQUIREMENT OF THE NCDOT AND MUNICIPAL SPECIFICATIONS.

DEMOLITION NOTES:

1. CONTRACTOR TO COORDINATE WITH THE OWNER TO PROPERLY MAINTAIN OR RELOCATE EXISTING SERVICE CONNECTIONS WHEN NECESSARY.
2. CONTRACTOR IS TO WALK THE SITE AND BECOME FAMILIAR WITH THE SCOPE OF DEMOLITION REQUIRED. ALL DEMOLITION WORK REQUIRED TO CONSTRUCT NEW SITE IMPROVEMENTS WILL BE PERFORMED BY THE CONTRACTOR AND WILL BE UNCLASSIFIED EXCAVATION.
3. DEMOLITION SHALL INCLUDE, BUT IS NOT LIMITED TO, THE EXCAVATION, HAULING AND OFFSITE DISPOSAL OF CONCRETE PADS, CONCRETE DITCHES, FOUNDATIONS, SLABS, STEPS, AND STRUCTURES; ABANDONED UTILITIES, BUILDINGS, PAVEMENTS AND ALL MATERIALS CLEARED AND STRIPPED TO THE EXTENT NECESSARY AS DIRECTED BY THE SOILS ENGINEER FOR THE INSTALLATION OF THE NEW IMPROVEMENTS AND WITHIN THE LIMITS OF CLEARING AND GRADING AND AS SHOWN ON THESE PLANS.
4. THE CONTRACTOR SHALL PROTECT ALL ADJACENT PROPERTY, STRUCTURES AND UTILITIES ON THE PROPERTY NOT TO BE DEMOLISHED. DAMAGE TO PROPERTIES OF OTHERS DUE TO THE CONTRACTOR'S ACTIVITIES SHALL BE REPLACED IN KIND BY THE CONTRACTOR AT NO COST TO OWNER.
5. ELECTRIC, TELEPHONE, SANITARY SEWER, WATER AND STORM SEWER UTILITIES THAT SERVICE OFF-SITE PROPERTIES SHALL BE MAINTAINED DURING THE CONSTRUCTION PROCESS BY THE CONTRACTOR.
6. EXISTING UTILITIES NOT INTENDED FOR DEMOLITION SHALL BE MAINTAINED, PROTECTED AND UNDISTURBED DURING DEMOLITION.
7. ALL EXISTING IMPROVEMENTS INDICATED OR REQUIRED TO BE DEMOLISHED SHALL INCLUDE REMOVAL FROM THE PROPERTY AND PROPER DISPOSAL.
8. CONTRACTOR SHALL COORDINATE RELOCATION OF ALL EXISTING OVER HEAD AND UNDERGROUND UTILITIES INCLUDING CABLE, GAS, TELEPHONE AND ELECTRIC AND ANY OTHER UTILITIES THROUGH THE SITE WITH THE RESPECTIVE COMPANIES.
9. PROVIDE SMOOTH SAW CUT OF EXISTING PAVEMENTS, CURBS AND GUTTERS AND SIDEWALKS TO BE DEMOLISHED.
10. ALL DEMOLITION WORK SHALL BE DONE IN STRICT ACCORDANCE WITH LOCAL, STATE AND FEDERAL REGULATIONS AS WELL AS OSHA REGULATIONS.
11. INFORMATION CONCERNING UNDERGROUND UTILITIES WAS OBTAINED FROM AVAILABLE RECORDS, BUT THE CONTRACTOR MUST DETERMINE THE EXACT LOCATION AND ELEVATIONS OF THE MAINS BY DIGGING TEST PITS BY HAND.

STORM DRAINAGE NOTES:

1. CONTRACTOR SHALL VERIFY AND COORDINATE ALL DIMENSIONS SHOWN, INCLUDING THE HORIZONTAL AND VERTICAL LOCATION OF CURB INLETS AND GRATE INLETS AND ALL UTILITIES CROSSING THE STORM SEWER.
2. CONTRACTOR SHALL PROVIDE ALL MATERIALS AND APPURTENANCES NECESSARY FOR COMPLETE INSTALLATION OF THE STORM SEWER.
3. ALL RCP STORM SEWER SHALL BE MINIMUM CLASS III REINFORCED CONCRETE PIPE, UNLESS OTHERWISE NOTED.
4. THE LOCATIONS OF STORM SEWER STRUCTURES SHOWN ON THESE PLANS ARE APPROXIMATE. WHERE PROPOSED STORM SEWER PIPING TIES TO EXISTING STRUCTURES, PIPES, SWALES, ETC., THE CONTRACTOR SHALL FIELD ADJUST PROPOSED STORM SEWERS TO MATCH THE LOCATIONS OF THESE EXISTING FEATURES.
5. UPON COMPLETION OF A PROJECT, AND BEFORE A CERTIFICATE OF OCCUPANCY SHALL BE GRANTED, THE APPLICANT SHALL CERTIFY THAT THE COMPLETED PROJECT IS IN ACCORDANCE WITH THE APPROVED STORMWATER MANAGEMENT PLANS AND DESIGNS, AND SHALL SUBMIT ACTUAL “AS BUILT” PLANS FOR ALL STORMWATER MANAGEMENT FACILITIES OR PRACTICES AFTER FINAL CONSTRUCTION IS COMPLETED.”
6. ALL STORM DRAINAGE PIPE SHALL HAVE A MINIMUM COVER OF 2 FEET FROM FINISHED SUBGRADE TO THE PIPE CROWN IN TRAFFIC, UNLESS APPROVED BY TOWN OF ROLESVILLE AND/OR NCDOT.
7. ALL STORM DRAINAGE PIPE SHALL HAVE A MINIMUM COVER OF 1 FOOT TO THE PIPE CROWN IN NON-TRAFFIC AREAS.
8. STORM SEWER PIPE ENDS SHALL BE FURNISHED WITH REINFORCED CONCRETE PIPE FLARED END SECTION UNLESS OTHERWISE SPECIFIED ON PLANS.
9. EACH DRAINAGE STRUCTURE SHALL HAVE A SHAPED INVERT CONSTRUCTED FROM CONCRETE, AND A BENCH WITH A MAXIMUM 5:1 SLOPE. THE BENCH SHALL BEGIN AT A HEIGHT OF ONE-HALF THE PIPE DIAMETER FOR 12 TO 24 INCH PIPE, ONE-THIRD THE PIPE DIAMETER FOR 30-48 INCH PIPE, AND ONE-FOURTH THE DIAMETER FOR PIPE GREATER THAN 48 INCHES.

GRADING NOTES:

1. REFER TO SITE CONSTRUCTION PLANS FOR CLEARING LIMITS AND TEMPORARY EROSION CONTROL DEVICES TO BE INSTALLED PRIOR TO COMMENCING CONSTRUCTION.
2. ALL AREAS SHALL BE GRADED FOR POSITIVE DRAINAGE, AND AS SHOWN ON THESE PLANS. THE CONTRACTOR SHALL MAINTAIN ADEQUATE SITE DRAINAGE DURING ALL PHASES OF CONSTRUCTION. IN ADDITION TO THE MEASURES SHOWN IN THESE PLANS, THE CONTRACTOR SHALL USE INTERIM DIVERSION DITCHES, BERMS, OR OTHER METHODS AS REQUIRED TO DIRECT DRAINAGE AS SHOWN ON THESE PLANS AND TO PREVENT SILT AND CONSTRUCTION DEBRIS FROM FLOWING ONTO ADJACENT PROPERTIES, ROADWAYS, AND ENVIRONMENTALLY SENSITIVE AREAS SUCH AS BUFFERS AND WETLANDS.
3. CONTRACTOR SHALL COORDINATE WITH THE UTILITY COMPANIES FOR ANY REQUIRED UTILITY ADJUSTMENTS AND/OR RELOCATIONS.
4. ALL MATERIALS USED FOR BACKFILL SHALL BE FREE OF WOOD, ROOTS, ROCKS, BOULDERS, OR ANY OTHER NON-COMPATIBLE SOIL TYPE MATERIAL. UNSATISFACTORY MATERIALS ALSO INCLUDE MAN-MADE FILLS AND REFUSE DEBRIS DERIVED FROM ANY SOURCE. REFER TO FINAL GEOTECHNICAL REPORT FOR ANY SPECIAL FILL MATERIAL REQUIRED FOR THIS PROJECT, IF ANY.
5. MATERIALS USED TO CONSTRUCT EMBANKMENTS FOR ANY PURPOSE, BACKFILL AROUND DRAINAGE STRUCTURES, OR IN UTILITY TRENCHES FOR ANY OTHER DEPRESSION REQUIRING FILL OR BACKFILL SHALL MEET THE REQUIREMENTS OF THE FINAL GEOTECHNICAL REPORT RECOMMENDATIONS, AND SHALL AT A MINIMUM BE COMPACTED TO 95% OF MAXIMUM DENSITY AS DETERMINED BY THE MODIFIED PROCTOR TEST AS SET OUT IN ASTM STANDARD D-1557.
6. THE CONTRACTOR SHALL, PRIOR TO ANY OPERATIONS INVOLVING FILLING OR BACKFILLING, SUBMIT THE RESULTS OF THE PROCTOR TEST TOGETHER WITH A CERTIFICATION THAT THE SOIL TESTED IS REPRESENTATIVE OF THE MATERIALS TO BE USED ON THE PROJECT. TESTS SHALL BE CONDUCTED BY A CERTIFIED MATERIALS TESTING LABORATORY AND CERTIFICATIONS MADE BY A LICENSED PROFESSIONAL ENGINEER REPRESENTING THE LABORATORY.
7. RETAINING SYSTEMS PROVIDING A CUMULATIVE VERTICAL RELIEF GREATER THAN FIVE FEET IN HEIGHT WITHIN A HORIZONTAL DISTANCE OF 50 FEET OR LESS, INCLUDING RETAINING WALLS OR MECHANICALLY STABILIZED EARTH WALLS SHALL BE DESIGNED AND CONSTRUCTED UNDER THE RESPONSIBLE CHARGE OF A REGISTERED PROFESSIONAL ENGINEER AND COMPLY IN ALL ASPECTS WITH THE NC BUILDING CODE SECTION 1610. RETAINING SYSTEMS MEETING THESE CRITERIA WILL REQUIRE A SEPARATE BUILDING PERMIT PRIOR TO THE START OF WORK.
8. ALL DEMOLITION DEBRIS AND OTHER EXCESS MATERIAL SHALL BE HAULED OFF-SITE.
9. REFERENCE STRUCTURAL DRAWINGS AND SPECIFICATIONS AND GEOTECHNICAL REPORT FOR BUILDING PAD AND PAVING SUBGRADE INFORMATION.
10. PROPOSED CONTOURS AND GUTTER GRADIENTS ARE APPROXIMATE. PROPOSED SPOT ELEVATIONS ARE TO BE USED IN CASE OF DISCREPANCY.
11. CONTRACTOR SHALL OBTAIN ALL PERMITS REQUIRED FOR BLASTING ROCK IF BLASTING ROCK IS ENCOUNTERED. CONTRACTOR SHALL BE SOLELY RESPONSIBLE FOR COMPLYING WITH ALL BLASTING AND SAFETY REQUIREMENTS.
12. CONTRACTOR SHALL INCLUDE IN THE CONTRACT PRICE ANY DEWATERING NECESSARY TO CONSTRUCT THE PROJECT AS SHOWN ON THE PLANS.
13. ACCESSIBLE ROUTES AND PARKING AREAS MUST BE PROVIDED IN ACCORDANCE WITH THE CURRENT ADA REQUIREMENTS. THE RUNNING SLOPE OF WALKING SURFACES CANNOT BE STEEPER THAN 1:20 AND CROSS SLOPE OF WALKING SURFACES CANNOT BE STEEPER THAN 1:48, WHICH INCLUDES CROSSWALKS.
14. THE PLACEMENT OF ANY FILL MATERIAL MUST BE CONDUCTED UNDER THE OBSERVATION OF A QUALIFIED LICENSED GEOTECHNICAL ENGINEER AND UPON COMPLETION OF THE EARTHWORK ACTIVITIES THE TOWN MUST BE PROVIDED WITH A FINAL GRADING REPORT THAT INCLUDES THE CORRESPONDING COMPACTION TEST RESULTS AND CERTIFIES THE TYPE OF FILL MATERIAL AND ITS PROPER PLACEMENT.
15. MASS GRADING OPERATIONS SHALL BE PHASED TO LIMIT EXPOSED AREAS. PRIOR TO PROCEEDING TO ANOTHER PHASE, THE PRESENT PHASE SHALL BE STABILIZED WITH ADEQUATE GROUND COVER SUFFICIENT TO RESTRAIN EROSION AND HAVE ALL INFRASTRUCTURE INSTALLED. MASS GRADING AND CLEARING SHALL NOT EXCEED 20 ACRES PER PHASE INCLUDING GRADING NECESSARY FOR INFRASTRUCTURE, EXCEPT WHERE THE TECHNICAL REVIEW COMMITTEE APPROVES AN INCREASE SUBJECT TO REVIEW OF AN EROSION CONTROL PLAN SUBMITTED WITH THE CONSTRUCTION DRAWINGS.
16. WETLANDS SHOWN WILL HAVE DEED RESTRICTION PROHIBITING GRADING OR FILLING OF LOTS UNLESS SPECIFICALLY PERMITTED BY THE USACOE & NCEDNR-DWQ.
17. DELINEATED WETLAND AREAS SHALL NOT BE CLEARED, DRAINED, OR OTHERWISE DISTURBED UNLESS SPECIFICALLY PERMITTED BY THE U.S. ARMY CORPS OF ENGINEERS AND NCDENR-DWQ.
18. CONSTRUCTION STAKEOUT FOR THIS PROJECT MAY BE PERFORMED BY THE CONTRACTOR, USING A DIGITAL (CADD) FILE PROVIDED BY THE ENGINEER. THE CONTRACTOR SHALL NOTIFY THE ENGINEER IMMEDIATELY OF ANY DISCREPANCIES FOUND BETWEEN THE DIGITAL FILE AND THE CRITICAL STAKING DIMENSIONS SHOWN ON THIS PLAN (I.E. PAVEMENT WIDTHS, CURB RADII, BUILDING SETBACKS, BUILDING FOOTPRINTS, ETC.). ANY MODIFICATIONS MADE BY OTHERS TO THE DIGITAL FILE PROVIDED BY THE ENGINEER SHALL RENDER IT VOID.
19. THE FRAMES AND COVERS OF ALL EXISTING AND PROPOSED DRAINAGE, SANITARY SEWER, WATER MAIN, GAS AND WIRE UTILITY STRUCTURES SHALL BE ADJUSTED TO MATCH PROPOSED FINISHED ELEVATIONS AND SLOPES.
20. WHERE PROPOSED CURB AND GUTTER TIES TO EXISTING CURB OR CURB AND GUTTER, A TRANSITION OF 10’ SHALL BE MADE TO CONFORM TO THE EXISTING HEIGHTS AND SHAPES.
21. BEFORE ANY EARTHWORK IS DONE, THE CONTRACTOR SHALL STAKE OUT AND MARK THE LIMITS OF PAVEMENT AND OTHER ITEMS ESTABLISHED IN THE PLANS. THE CONTRACTOR SHALL PROVIDE ALL NECESSARY SURVEYING FOR LINE AND GRADE CONTROL POINTS RELATED TO EARTHWORK.
22. ALL PAVEMENT SUBGRADES SHALL BE SCARIFIED TO A DEPTH OF 8 INCHES AND COMPACTED TO A MINIMUM DENSITY OF 100 PERCENT OF ASTM D-1557 DENSITY AT OPTIMUM MOISTURE CONTENT UNLESS OTHERWISE SHOWN ON THE CONSTRUCTION PLANS OR AS DIRECTED BY THE GEOTECHNICAL ENGINEER.
23. FILL SHALL BE PLACED AND COMPACTED AS DIRECTED BY THE GEOTECHNICAL ENGINEER.
24. ALL CURB JOINTS SHALL EXTEND THROUGH THE CURB. MINIMUM LENGTH OF OFFSET JOINTS AT RADIUS POINTS IS 1.5’. ALL JOINTS SHALL BE SEALED WITH JOINT SEALANT.
25. THE CONTRACTOR IS RESPONSIBLE FOR ENSURING ALL SOIL TESTING IS PERFORMED AND THE RESULTS FORWARDED TO THE ENGINEER AND OWNER.
26. TREE PROTECTION FENCING SHALL BE INSTALLED AND INSPECTED PRIOR TO ISSUANCE OF A GRADING PERMIT. FENCING SHALL NOT BE REQUIRED ADJACENT TO AREAS WITHOUT WOODED VEGETATION. FENCING SHALL BE MAINTAINED ON THE SITE UNTIL ALL SITE WORK IS COMPLETED AND THE FINAL SITE INSPECTION PRIOR TO THE CERTIFICATE OF OCCUPANCY (CO) IS SCHEDULED. THE FENCING SHALL BE REMOVED PRIOR TO FINAL SITE INSPECTION FOR THE CO.

EROSION & SEDIMENT CONTROL NOTES:

1. CONTRACTOR SHALL CONSTRUCT DIVERSION DITCHES AS NECESSARY TO ENSURE ALL SEDIMENT IS DIRECTED INTO EROSION CONTROL MEASURES.
2. CONTRACTOR SHALL CLEAR ONLY AS REQUIRED TO INSTALL EROSION AND SEDIMENT CONTROL MEASURES. CONTRACTOR SHALL INSTALL SILT FENCE, SEDIMENT BASINS, DIVERSION DITCHES, AND THEN BEGIN GRADING ROADWAYS.
3. IF STORM CROSS DRAINAGE CAN NOT BE INSTALLED PRIOR TO GRADING, TEMPORARY HDPE SHALL BE USED TO CROSS WET WEATHER CHANNELS.
4. CONTRACTOR SHALL ENSURE GRADING OPERATION IS CONDUCTED IN A MANNER THAT DOES NOT ALLOW ANY SEDIMENT INTO CREEKS.
5. ALL STORM DRAINAGE PIPE SHALL BE PROTECTED DURING CONSTRUCTION.
6. CONTRACTOR SHALL PROVIDE RIP RAP LINED TAIL DITCHES AT THE STORM DRAINAGE PIPE DISCHARGE POINTS AS REQUIRED TO ENSURE POSITIVE DRAINAGE.
7. TO AVOID SLOPE EROSION, CONTRACTOR SHALL INSTALL TEMPORARY SLOPE DRAINS PER DETAIL AT LOCATIONS WHERE TEMPORARY DIVERSION DITCHES DISCHARGE INTO A SKIMMER BASIN.
8. SEDIMENT BASINS SHALL BE KEPT OUT OF WETLAND AREAS.
9. PERMANENT GROUND COVER SHALL BE ESTABLISHED PER NPDES LATEST REQUIREMENTS. ALL PERIMETER DIKES, SWALES, DITCHES, PERIMETER SLOPES AND ALL SLOPES STEEPER THAN 3:1 SHALL BE PROVIDED GROUND COVER WITHIN 7 CALENDAR DAYS FROM THE LAST DISTURBANCE. ALL OTHER DISTURBED AREAS SHALL BE PROVIDED GROUND COVER WITHIN 14 CALENDAR DAYS FROM THE LAST DISTURBANCE. TOPSOIL SHALL BE WASTED OFFSITE OR IN FILL AREAS AS SHOWN.
10. TEMPORARY DIVERSIONS ARE TO REMAIN IN PLACE UNTIL THE STORM DRAINAGE SYSTEM IS IN PLACE AND THE UPSTREAM AREA IS STABILIZED.
11. THE TREE PROTECTION FENCE SHALL BE MAINTAINED ON THE SITE UNTIL ALL SITE WORK IS COMPLETED AND THE FINAL SITE INSPECTION PRIOR TO THE CERTIFICATE OF OCCUPANCY (CO) IS SCHEDULED. THE FENCING SHALL BE REMOVED PRIOR TO FINAL SITE INSPECTION FOR THE CO.
12. A GRAVEL CONSTRUCTION ENTRANCE SHALL BE CONSTRUCTED AT EACH POINT OF CONSTRUCTION ACCESS.
13. THE CONTRACTOR SHALL MARK THE LIMITS OF THE BUFFER WITH ORANGE TREE PROTECTION FENCE WITH APPROPRIATE SIGNAGE. TREE PROTECTION FENCE SHALL BE INSTALLED ALONG THE OUTER ZONE OF ANY STREAM BUFFERS IF THERE IS ANY CONSTRUCTION WITHIN 50 FEET OF THE EDGE OF THE BUFFER. THIS MUST BE DONE PRIOR TO STARTING ANY CLEARING, AND MUST BE DONE TO OBTAIN A CERTIFICATE OF COMPLIANCE. IF THE DEVELOPER HAS RECEIVED APPROVAL TO WORK IN THE FIRST 20 FEET OF THE BUFFER, THEN THE LAST 30 FEET BOUNDARY SHALL BE MARKED IN THE AREA ADJACENT TO THIS WORK. OTHERWISE THE ENTIRE 50 FEET SHALL BE MARKED. THIS MARKING SHALL REMAIN IN PLACE UNTIL ALL ADJACENT DISTURBED AREAS HAVE BEEN COMPLETED AND STABILIZED.

GENERAL LANDSCAPE NOTES:

1. THE CONTRACTOR SHALL TAKE PROPER PRECAUTIONS NOT TO DAMAGE EXISTING PLANTS, FACILITIES AND STRUCTURES THAT ARE TO REMAIN. THE CONTRACTOR SHALL RESTORE DISTURBED AREAS TO THEIR ORIGINAL CONDITION TO THE SATISFACTION OF THE LANDSCAPE ARCHITECT AND OWNER. ADJACENT STREETS AND SIDEWALKS SHALL BE MAINTAINED IN A CLEAN CONDITION, MUD AND DUST-FREE.
2. ALL CONSTRUCTION IS TO BE IN ACCORDANCE WITH MUNICIPAL STANDARDS AND SPECIFICATIONS, AND NCDOT, STANDARDS AND SPECIFICATIONS IF APPLICABLE.
3. NO CHANGES TO ANY ASPECT OF APPROVED SITE PLAN, INCLUDING BUT NOT LIMITED TO LANDSCAPING, GRADING, BUILDING ELEVATIONS, LIGHTING, OR UTILITIES SHALL BE MADE WITHOUT THE APPROVAL OF THE GOVERNING MUNICIPALITY.
4. ALL PLANTS PROVIDED BY THE CONTRACTOR SHALL MEET OR SURPASS THE SPECIFICATIONS GIVEN IN THE PLANT TABLE AND CONFORM TO THE AMERICAN STANDARD OF NURSERY STOCK, ANSI Z601-1973 IN REGARD TO SIZING, GROWING AND B&B SPECIFICATIONS. PLANTS SHALL BE FULL AND HEAVY, AND IN HEALTHY CONDITION AT THE TIME OF PLANTING. LANDSCAPE ARCHITECT SHALL REJECT ANY PLANT NOT MEETING THESE GUIDELINES AND REQUIRE REPLACEMENT.
5. ALL PLANTS ARE TO BE FULLY GUARANTEED (INCLUDING LABOR AND MATERIALS) FOR A PERIOD OF NOT LESS THAN ONE (1) YEAR FROM FINAL ACCEPTANCE.
6. [PLANTING SHALL FOLLOW NCDOT STANDARD SPECIFICATIONS AS OUTLINED IN SECTION 1670. PLANTING SEASON IS OCTOBER 15 - MARCH 15, UNLESS OTHERWISE NOTED OR APPROVED BY NCDOT ENGINEER.] ALL PLANTS THAT ARE UNABLE TO BE IMMEDIATELY PLANTED SHALL BE STORED IN A PROTECTED AREA OUT OF DIRECT SUN AND WIND. PLANTS SHALL BE EVENLY AND CONSISTENTLY WATERED, AS NEEDED, TO PREVENT DRYING OF ROOTS. ROOT BALLS OF B&B STOCK SHALL BE COVERED WITH AT LEAST 4 INCHES OF HARDWOOD MULCH TO MAINTAIN MOISTURE IN ROOTS.
7. THE CONTRACTOR SHALL VERIFY ALL PLANT QUANTITIES SHOWN ON PLANS AND CLARIFY ANY DISCREPANCIES WITH LANDSCAPE ARCHITECT PRIOR TO PURCHASING PLANTS. CONTRACTOR SHALL TAG ALL TREES (AS DESIGNATED IN THE MASTER PLANT LIST) AT THE NURSERY FOR APPROVAL BY THE LANDSCAPE ARCHITECT PRIOR TO PURCHASING PLANTS.
8. LANDSCAPE ARCHITECT SHALL BE NOTIFIED IN WRITING OF ANY PROPOSED PLANT SUBSTITUTIONS BY THE CONTRACTOR. NO SUBSTITUTIONS SHALL BE MADE UNDER ANY CIRCUMSTANCES WITHOUT PRIOR APPROVAL BY THE LANDSCAPE ARCHITECT OR OWNER'S REPRESENTATIVE.
9. ALL PLANTS AND PLANTING BEDS ARE TO BE LOCATED BY SCALED DIMENSIONS FROM BUILDINGS, CURBS, PAVEMENTS, ETC. SPECIFIC ATTENTION SHALL BE GIVEN TO ENSURE THAT PLANTS INDIVIDUALLY SHOWN ON THE PLAN ARE ACCURATELY LOCATED. LOCATION OF ALL PLANTS SHALL BE REVIEWED IN THE FIELD BY THE LANDSCAPE ARCHITECT PRIOR TO INSTALLATION. CONTRACTOR SHALL PROVIDE 48 HOURS NOTICE FOR REVIEW.
10. A PRE-EMERGENT HERBICIDE SHALL BE APPLIED TO ALL NEW PLANTING BEDS IN ACCORDANCE WITH MANUFACTURER'S RECOMMENDATIONS AND ALLOWED TO DISSIPATE PRIOR TO INSTALLATION OF ANY PLANT MATERIAL.
11. ALL LANDSCAPE AREAS ARE TO BE GRADED FOR POSITIVE DRAINAGE AND TO ENSURE NO STANDING WATER. SEE GRADING PLAN FOR SPECIFIC GRADING INFORMATION.
12. ESTABLISH AND MAINTAIN TOP OF GRADE BELOW ADJACENT CURBS, WALKWAYS AND OTHER HARDSCAPE AREAS TO ALLOW FOR INSTALLATION OF MULCH.
13. ALL PLANTING BEDS ARE TO BE COVERED WITH MULCH TO A MINIMUM DEPTH OF 3 INCHES. MULCH SHALL BE DARK BROWN, DESIGNER-GRADE, DOUBLE-SHREDDED HARDWOOD. NO PINE STRAW IS PERMITTED. CONTRACTOR TO SUBMIT A SAMPLE FOR APPROVAL BY LANDSCAPE ARCHITECT PRIOR TO PURCHASE AND DELIVERY TO PROJECT SITE.
14. FINISH OFF 2-4' CLEAR ZONE AROUND TREES WITH A 3" LAYER OF MULCH, BUT DO NOT PLACE UP AGAINST OR MOUND AROUND THE ROOT FLARE.
15. MIXED GROUNDCOVER AND PLANTS SPECIFIED FOR MASS PLANTINGS SHALL BE PLANTED IN GROUPS OF 3-7 AND LOCATED AS REQUIRED TO PROVIDE A GENERAL MIXING OF SPECIES. DO NOT PLANT IN ROWS OR REPETITIVE PATTERNS UNLESS OTHERWISE DIRECTED.
16. ALL TREES ADJACENT TO PEDESTRIAN WALKWAYS AND IN SIGHT TRIANGLES SHALL BE UNDER-TRIMMED SUFFICIENTLY TO ALLOW CLEAR SIGHT AND PEDESTRIAN ACCESS UP TO 6 FEET ABOVE SIDEWALK ELEVATION. ALL PRUNING SHALL BE PERFORMED BY A CERTIFIED ARBORIST, AND ADHERE TO THE ANSI A300 PRUNING STANDARD. PRUNING CUTS ARE TO BE DELIBERATE AND TARGETED ONLY TO THE NECESSARY BRANCHES IN ORDER TO SATISFY SIGHT AND CLEARANCE REQUIREMENTS WHILE MAINTAINING THE INTEGRITY OF THE TREES.

WithersRavenel
Engineers | Planners
137 S Wilmington Street | Suite 200 | Raleigh, NC 27601 | t: 919.469.3340 | license #: F-1479
www.withersravenel.com

PROJECT # SP 22-02

ROLESVILLE PUBLIC
WORKS FACILITY

ROLESVILLE, NORTH CAROLINA

GENERAL NOTES

Job No. 02210710.00	
Date 7/1/2022	Drawn By DBG
Checked By PED	Designer PED/DBG

DocuSigned by:
D66BFCDE6B04494...

PAUL DEVLIN
049219
7/1/2022

Revisions

Sheet No.
C0.01

17. CONTRACTOR IS RESPONSIBLE FOR FULLY MAINTAINING ALL PLANTING (INCLUDING, BUT NOT LIMITED TO WATERING, MULCHING, SPRAYING, FERTILIZING, ETC.) OF THE PLANTING AREAS UNTIL FINAL ACCEPTANCE.

18. ANY PLANT WHICH DIES, TURNS BROWN OR DEFOLIATES PRIOR TO FINAL ACCEPTANCE OF THE WORK SHALL BE PROMPTLY REMOVED FROM THE SITE AND REPLACED WITH MATERIAL OF THE SAME SPECIES, IN ACCORDANCE WITH THE APPROPRIATE PLANTING SEASON, QUANTITY AND SIZE TO MEET PLAN SPECIFICATIONS.

19. UTILITIES SHOWN ON THE LANDSCAPE DRAWINGS ARE FOR REFERENCE ONLY. SEE UTILITY DRAWINGS FOR EXISTING AND PROPOSED UTILITY LOCATIONS. THE CONTRACTOR MUST LOCATE AND VERIFY ALL SUCH INFORMATION, INCLUDING INFORMATION NOT SHOWN ON THE PLANS, BY CONTACTING THE INDIVIDUAL UTILITY COMPANY & INVESTIGATING THE SITE TO DETERMINE THE EXACT LOCATION OF UTILITY LINES AND STRUCTURES. THE CONTRACTOR SHALL BE RESPONSIBLE FOR REPAIRING, AT HIS OWN EXPENSE, AND TO THE SATISFACTION OF THE PROJECT OWNER AND THE UTILITY OWNER, DAMAGE TO ANY UTILITY CAUSED BY HIS WORK. HE SHALL IMMEDIATELY NOTIFY THE OWNER AND THE UTILITY OWNER OF ANY DAMAGE TO ANY UTILITY BY HIS OPERATION.

20. THE SITE SHALL BE STABILIZED AND SEEDED PRIOR TO THE ISSUANCE OF A CERTIFICATE OF OCCUPANCY (CO).

21. ALL ABOVE-GROUND HVAC EQUIPMENT AND UTILITY DEVICES (TO INCLUDE, BUT NOT LIMITED TO TELEPHONE AND CABLE PEDESTALS; ELECTRICAL TRANSFORMERS; BACKFLOW-DEVICE HOTBOX; ETC) SHALL BE SCREENED FROM OFF-SITE VIEW BY EVERGREEN SHRUBS, FENCE, OR WALL.

TREE PROTECTION NOTES:

1. ALL TREES THAT ARE TO REMAIN, WITHIN OR DIRECTLY ADJACENT TO THE LIMITS OF WORK, MUST BE PROTECTED WITH 6' TALL CHAIN LINK FENCE TO THE EXTENT OF THE TREE BOX OR THE DRIP LINE IN A PLANTING STRIP. THE DRIP LINE IS DEFINED AS THE GROUND AREA UNDER THE CANOPY OF THE TREE. FENCING IS TO BE INSTALLED PRIOR TO CONSTRUCTION, MAINTAINED THROUGHOUT, AND REMOVED ONLY AT THE END OF THE PROJECT.

2. NONE OF THE FOLLOWING SHALL OCCUR WITHIN THE ROOT ZONE OF A TREE WITHOUT PERMISSION OF LANDSCAPE ARCHITECT OR PROJECT ARBORIST: ALTERATION OR DISTURBANCE TO EXISTING GRADE; STAGING OR STORAGE OF CONSTRUCTION MATERIALS, EQUIPMENT, SOIL OR DEBRIS; TRENCHING; OR DISPOSAL OF ANY LIQUIDS.
3. NO HEAVY EQUIPMENT SHALL BE USED WITHIN THE DRIP LINE OF AN EXISTING TREE.

4. APPROVED EXCAVATIONS WITHIN THE DRIP LINE SHALL PROCEED WITH CARE BY USE OF HAND TOOLS OR EQUIPMENT THAT WILL NOT CAUSE INJURY TO TREE TRUNKS, BRANCHES AND ROOTS.

5. NO ROOTS GREATER THAN 2 INCHES IN DIAMETER SHALL BE CUT WITHOUT PERMISSION OF LANDSCAPE ARCHITECT OR PROJECT ARBORIST. EXPOSED ROOTS 2 INCHES AND LARGER IN DIAMETER SHALL BE WRAPPED IN BURLAP OR OTHER APPROVED MATERIAL AND KEPT MOIST AT ALL TIMES.

6. IF THERE ARE ANY TREE CONFLICTS ON THIS JOB SITE, PERMIT HOLDER MUST SUSPEND ALL WORK THAT CONTRIBUTES TO THE CONFLICT AND IMMEDIATELY CONTACT LANDSCAPE ARCHITECT OR PROJECT ARBORIST FOR DIRECTION AND CLEARANCE TO CONTINUE THE CONFLICTING WORK.

7. TREES THAT ARE PROTECTED SHALL BE THOROUGHLY WATERED AS REQUIRED TO KEEP ROOT BALLS FROM DRYING OUT, ESPECIALLY BETWEEN APRIL THROUGH SEPTEMBER.

UTILITIES NOTES:

1. ALL FILL MATERIAL IS TO BE IN PLACE AND COMPACTED BEFORE INSTALLATION OF PROPOSED UTILITIES.

2. ALL NECESSARY INSPECTIONS, CERTIFICATIONS, OR TESTING REQUIRED BY CODES OR UTILITY SERVICE COMPANIES SHALL BE PERFORMED PRIOR TO MUNICIPAL APPROVAL FOR THE FINAL CONNECTION OF SERVICE.

3. CONTRACTOR SHALL PROVIDE ALL MATERIALS AND APPURTENANCES NECESSARY FOR COMPLETE INSTALLATION OF THE IMPROVEMENTS SHOWN.

4. THE CONTRACTOR SHALL BE RESPONSIBLE FOR RELOCATION OF EXISTING UTILITIES IF REQUIRED DURING INSTALLATION OF NEW WORK. THERE WILL BE NO ADDITIONAL OR SEPARATE PAY ITEM FOR THIS WORK UNLESS SPECIFICALLY CALLED OUT IN THE BID FORM. ANY RELOCATION OF EXISTING UTILITIES MUST BE COORDINATED WITH THE AFFECTED UTILITY COMPANY.

5. THE CONTRACTOR SHALL BE RESPONSIBLE FOR OBTAINING ALL REQUIRED PERMITS AND FEES FOR THE ABANDONMENT OF WELLS AND SEPTIC SYSTEMS.

6. ALL WORK SHALL BE COMPLETED IN ACCORDANCE WITH THE NCDEQ WELL AND SEPTIC SYSTEM STANDARDS. AN ABANDONMENT PERMIT SHALL BE OBTAINED FROM THE COUNTY ENVIRONMENTAL HEALTH DIVISION PRIOR TO COMMENCING ABANDONMENT WORK.

7. LANDSCAPING OR PARKING CANNOT BLOCK OR IMPEDE THE FDC OR FIRE HYDRANTS. A 3-FOOT (3') CLEAR SPACE SHALL BE MAINTAINED AROUND THE CIRCUMFERENCE OF ANY HYDRANT, FDC OR OTHER FIRE DEPARTMENT EQUIPMENT.

8. HYDRANTS MUST BE LOCATED WITHIN 8' OF THE CURB.

9. A MINIMUM OF 5' SHALL SEPARATE UNDERGROUND FIRE LINES OR PRIVATE WATER MAINS FROM OTHER UNDERGROUND UTILITIES.

10. NEW HYDRANTS MUST BE AVAILABLE FOR USE PRIOR TO CONSTRUCTION OF THE BUILDING(S).

11. CONTRACTOR SHALL MAINTAIN AN ALL WEATHER ACCESS FOR EMERGENCY VEHICLES AT ALL TIMES DURING CONSTRUCTION.

12. ADDITIONAL FIRE PROTECTION AND ACCESSIBILITY REQUIREMENTS MAY BE REQUIRED DUE TO ANY SPECIAL CIRCUMSTANCES CONCERNING THE PROJECT.

13. ALL ISOLATION VALVES WITHIN THE "HOT BOX" SHALL BE ELECTRICALLY SUPERVISED. PLEASE WORK WITH YOUR FIRE SPRINKLER AND ALARM INSTALLER IN REGARDS TO RUNNING WIRE FOR TAMPER SWITCH.

14. ROADWAYS AND BUILDINGS MUST BE CAPABLE OF SUPPORTING FIRE APPARATUS DURING CONSTRUCTION.

15. FIRE FLOW ANALYSIS MUST BE PROVEN AT TIME OF BUILDING PERMITS PER THE 2012 NCFPC, SECTION 507.3. THIS IS THE AVAILABLE FIRE FLOW FROM THE HYDRANT AND THE MINIMUM REQUIRED FIRE FLOW CALCULATION FROM 2012 NCFPC APPENDIX B OR OTHER APPROVED METHOD.

16. PLANS TO NOT PURPORT TO SHOW ALL EXISTING UTILITIES.

17. CONTRACTOR SHALL REPLACE WITH NEW ALL DRIVEWAY PIPES AND OTHER DRAINAGE PIPES/CULVERTS THAT ARE DISTURBED WHILE INSTALLING THE UTILITIES. ALL PIPE/CULVERTS SHALL MEET THE REQUIREMENTS OF NCDOT.

18. ALL ROADWAY DITCHES DISTURBED DURING CONSTRUCTION SHALL BE RESTORED TO PRE-CONSTRUCTION CONDITION OR BETTER AND CONFORM TO NCDOT REQUIREMENTS. ALL DITCHES SHALL BE LINED WITH EROSION CONTROL MATTING UNLESS OTHERWISE NOTED.

19. ALL EXCAVATED MATERIAL SHALL BE PLACED WITHIN THE LIMITS OF DISTURBANCE DURING UTILITY INSTALLATION. THE CONTRACTOR SHALL PROVIDE THE NECESSARY SEDIMENT AND EROSION CONTROL MEASURES TO CONTROL RUN-OFF. ALL EXCESS EXCAVATED MATERIAL SHALL BE REMOVED FROM THE CONSTRUCTION SITE AND DISPOSED OF LEGALLY.

CONSTRUCTION SEQUENCE:

1. NOTIFY THE STATE OF NORTH CAROLINA DEPARTMENT OF ENVIRONMENT AND NATURAL RESOURCES RRO LQS AT (919) 791-4200 OF CONSTRUCTION COMMENCEMENT AND SCHEDULE PRE-CONSTRUCTION CONFERENCE.

2. INSTALL CONSTRUCTION ENTRANCES, SILT FENCE, STONE DRAINS, AND OTHER MEASURES AS SHOWN ON THE APPROVED PLAN. CLEAR ONLY AS REQUIRED TO INSTALL THESE DEVICES.

3. BEGIN LIMITED CLEARING AND GRUBBING ACTIVES AS DIRECTED BY THE ENGINEER.

4. STOCKPILE TOPSOIL AND SUITABLE FILL MATERIAL. INSTALL SILT FENCE AROUND STOCKPILE AREAS. DISPOSE OF UNSUITABLE SOILS AND ALL OTHER WASTE MATERIALS OFF-SITE IN A LEGAL MANNER. THE CONTRACTOR WILL BE RESPONSIBLE FOR LOCATIONS OF ALL STOCKPILES AND ALL ADDITIONAL SEDIMENT AND EROSION CONTROLS MEASURERS REQUIRED.

5. BEGIN EXCAVATION AND TRENCHING ACTIVITIES ONLY AFTER ALL REQUIRED EROSION CONTROL MEASURES HAVE BEEN INSTALLED.

6. BEGIN CONSTRUCTION AND INSTALLATION OF UTILITY LINE.

7. BACKFILL AND ESTABLISH FINISHED GRADE IMMEDIATELY AFTER PIPES HAVE BEEN INSTALLED.

8. CONTRACTOR TO CONDUCT A WEEKLY SITE INSPECTION AND AFTER EACH RAINFALL EVENT TO DETERMINE WHICH AREAS CAN BE TEMPORARILY OR PERMANENTLY SEEDED, WHICH DEVICES NEED MAINTENANCE, REPAIR, ETC., AND TO ENSURE THAT THE EROSION CONTROL MEASURES ARE PERFORMING ADEQUATELY. PERFORM ANY NECESSARY MAINTENANCE.

9. STABILIZE SITE AS AREAS ARE BROUGHT TO FINISHED GRADE WITH VEGETATION OR STONE BASE. ALL AREAS INDICATED TO BE PAVED SHALL BE STABILIZED WITH STONE AS SOON AS THEY ARE BROUGHT TO FINAL GRADE. MAINTAIN DIVERSIONS, INLET PROTECTION, AND SEDIMENT BASINS UNTIL SITE IS COMPLETELY STABILIZED.

10. REMOVE STOCKPILES AND MATERIALS AND DECOMMISSION STAGING AND LAYDOWN AREAS.

11. SEED, FERTILIZE, AND MULCH ALL DISTURBED AREAS, INCLUDING ALL STORAGE, STAGING, AND OFF-SITE STAGING, IN ACCORDANCE WITH THE REQUIREMENTS SET FORTH ON THE PLANS.

12. WHEN CONSTRUCTION IS COMPLETE AND ALL AREAS ARE STABILIZED, CALL FOR AN INSPECTION BY AN ENVIRONMENTAL INSPECTOR.

13. IF SITE IS APPROVED, REMOVE ANY TEMPORARY DIVERSIONS, SILT FENCES, SEDIMENT TRAPS, ETC., AND RE-GRADE AND SEED OR STABILIZE ANY RESULTING BARE AREAS.

14. WHEN VEGETATION HAS BECOME ESTABLISHED, CALL FOR A FINAL SITE INSPECTION BY AN ENVIRONMENTAL INSPECTOR. OBTAIN CERTIFICATE OF COMPLETION.

FIRE & LIFE SAFETY NOTES:

1. LANDSCAPING OR PARKING CANNOT BLOCK OR IMPEDE THE FDC OR FIRE HYDRANTS. A 3-FOOT (3') CLEAR SPACE SHALL BE MAINTAINED AROUND THE CIRCUMFERENCE OF ANY HYDRANT, FDC OR OTHER FIRE DEPARTMENT EQUIPMENT.

2. HYDRANTS MUST BE LOCATED WITHIN 8' OF THE CURB.

3. A MINIMUM OF 5' SHALL SEPARATE UNDERGROUND FIRE LINES OR PRIVATE WATER MAINS FROM OTHER UNDERGROUND UTILITIES.

4. NEW HYDRANTS MUST BE AVAILABLE FOR USE PRIOR TO CONSTRUCTION OF THE BUILDING(S).

5. CONTRACTOR SHALL MAINTAIN AN ALL-WEATHER ACCESS FOR EMERGENCY VEHICLES AT ALL TIMES DURING CONSTRUCTION.

6. TEMPORARY STREET SIGNS SHALL BE INSTALLED AT EACH STREET INTERSECTION WHEN CONSTRUCTION OF NEW ROADWAYS ALLOWS PASSAGE BY VEHICLES.

7. HYDRANT MUST BE WITHIN 150' OF THE FDC (MEASURED AS THE TRUCK DRIVES FOR PRACTICAL USE).

8. FDC MUST BE WITHIN 40' OF FIRE APPARATUS PLACEMENT.

9. ADDITIONAL FIRE PROTECTION AND ACCESSIBILITY REQUIREMENTS MAY BE REQUIRED DUE TO ANY SPECIAL CIRCUMSTANCES CONCERNING THE PROJECT.

10. ALL ISOLATION VALVES WITHIN THE "HOT BOX" SHALL BE ELECTRICALLY SUPERVISED. PLEASE WORK WITH YOUR FIRE SPRINKLER AND ALARM INSTALLER IN REGARD TO RUNNING WIRE FOR TAMPER SWITCH.

11. ROADWAYS AND BUILDINGS MUST BE CAPABLE OF SUPPORTING FIRE APPARATUS DURING CONSTRUCTION.

12. FIRE FLOW ANALYSIS MUST BE PROVEN AT TIME OF BUILDING PERMITS PER THE 2012 NCFPC, SECTION 507.3. THIS IS THE AVAILABLE FIRE FLOW FROM THE HYDRANT AND THE MINIMUM REQUIRED FIRE FLOW CALCULATION FROM 2012 NCFPC APPENDIX B OR OTHER APPROVED METHOD.

13. PLANS TO NOT PURPORT TO SHOW ALL EXISTING UTILITIES.

14. CONTRACTOR SHALL REPLACE WITH NEW ALL DRIVEWAY PIPES AND OTHER DRAINAGE PIPES/CULVERTS THAT ARE DISTURBED WHILE INSTALLING THE UTILITIES. ALL PIPE/CULVERTS SHALL MEET THE REQUIREMENTS OF NCDOT.

15. ALL ROADWAY DITCHES DISTURBED DURING CONSTRUCTION SHALL BE RESTORED TO PRE-CONSTRUCTION CONDITION OR BETTER AND CONFORM TO NCDOT REQUIREMENTS. ALL DITCHES SHALL BE LINED WITH EROSION CONTROL MATTING UNLESS OTHERWISE NOTED.

16. ALL EXCAVATED MATERIAL SHALL BE PLACED WITHIN THE LIMITS OF DISTURBANCE DURING UTILITY INSTALLATION. THE CONTRACTOR SHALL PROVIDE THE NECESSARY SEDIMENT AND EROSION CONTROL MEASURES TO CONTROL RUN-OFF. ALL EXCESS EXCAVATED MATERIAL SHALL BE REMOVED FROM THE CONSTRUCTION SITE AND DISPOSED OF LEGALLY.

LEGEND

(UNLESS OTHERWISE DENOTED)

DESCRIPTION	EXISTING	PROPOSED
1' CONTOUR INTERVAL		
5' CONTOUR INTERVAL		
PROPERTY LINE		
ROADWAY CENTERLINE		
RIGHT OF WAY LIMITS		N/A
EASEMENT LINE		
CURB & GUTTER		
EDGE OF PAVEMENT		
SANITARY SEWER FACILITIES	SS	SS
STORM SEWER FACILITIES		
WATERLINE	W	W
FIRE HYDRANT ASSEMBLY		
FORCE MAIN	FM	FM
ELECTRIC	E	N/A
OVERHEAD ELECTRIC	OHE	N/A
GAS MAIN	G	N/A
TELEPHONE	T	N/A
STRUCTURES		
FENCING STRUCTURE	XX XX XX XX	
TELEVISION PEDESTAL	TV	N/A
WATER MANHOLE	W	N/A
TELEPHONE MANHOLE	T	N/A
FLARED END SECTION		N/A
SANITARY SEWER MANHOLE	S	N/A
GAS VALVE		N/A
UTILITY MANHOLE	U	N/A
ELECTRICAL PEDESTAL	E	N/A
SIGN		N/A
FIBER OPTIC MARKER	FO	N/A

DESCRIPTION	EXISTING	PROPOSED
WOODS LINE		N/A
WATERWAYS		N/A
TREE PROTECTION FENCE	N/A	TP
SILT FENCE	N/A	SF
SPOT ELEVATION	(340.17) CL	339.92 EP
GUY ANCHOR		N/A
POWER POLE		N/A
LIGHT POLE		N/A
PROPERTY IRON		N/A
CURB INLET		N/A
STORM DRAIN JUNCTION BOX		N/A
YARD INLET		N/A
WATER METER		N/A
CONCRETE MONUMENT		N/A
TELEPHONE PEDESTAL	TP	N/A
MAIL BOX	MB	N/A
WATER VALVE		
CHECK DAM	N/A	
INLET PROTECTION	N/A	
SILT FENCE	N/A	SF
SILT FENCE OUTLET	N/A	

CORPUD UTILITY NOTES

1. STANDARD UTILITY NOTES (AS APPLICABLE): ALL MATERIALS & CONSTRUCTION METHODS SHALL BE IN ACCORDANCE WITH CITY OF RALEIGH DESIGN STANDARDS, DETAILS & SPECIFICATIONS (REFERENCE: CORPUD HANDBOOK, CURRENT EDITION)

2. UTILITY SEPARATION REQUIREMENTS:
2.1. A DISTANCE OF 100' SHALL BE MAINTAINED BETWEEN SANITARY SEWER & ANY PRIVATE OR PUBLIC
2.2. WATER SUPPLY SOURCE SUCH AS AN IMPOUNDED RESERVOIR USED AS A SOURCE OF DRINKING WATER. IF
2.3. ADEQUATE LATERAL SEPARATION CANNOT BE ACHIEVED, FERROUS SANITARY SEWER PIPE SHALL BE
2.4. SPECIFIED & INSTALLED TO WATERLINE SPECIFICATIONS. HOWEVER, THE MINIMUM SEPARATION SHALL

3. NOT BE LESS THAN 25' FROM A PRIVATE WELL OR 50' FROM A PUBLIC WELL

4. WHEN INSTALLING WATER &/OR SEWER MAINS, THE HORIZONTAL SEPARATION BETWEEN UTILITIES SHALL BE 10'. IF THIS SEPARATION CANNOT BE MAINTAINED DUE TO EXISTING CONDITIONS, THE VARIATION ALLOWED IS THE WATER MAIN IN A SEPARATE TRENCH WITH THE ELEVATION OF THE WATER MAIN AT LEAST 18" ABOVE THE TOP OF THE SEWER & MUST BE APPROVED BY THE PUBLIC UTILITIES DIRECTOR. ALL DISTANCES ARE MEASURED FROM OUTSIDE DIAMETER TO OUTSIDE DIAMETER

5. WHERE IT IS IMPOSSIBLE TO OBTAIN PROPER SEPARATION, OR ANYTIME A SANITARY SEWER PASSES OVER A WATERMAIN, DIP MATERIALS OR STEEL ENCASEMENT EXTENDED 10' ON EACH SIDE OF CROSSING MUST BE SPECIFIED & INSTALLED TO WATERLINE SPECIFICATIONS

6. 5.0' MINIMUM HORIZONTAL SEPARATION IS REQUIRED BETWEEN ALL SANITARY SEWER & STORM SEWER FACILITIES, UNLESS DIP MATERIAL IS SPECIFIED FOR SANITARY SEWER

7. MAINTAIN 18" MIN. VERTICAL SEPARATION AT ALL WATERMAIN & RCP STORM DRAIN CROSSINGS; MAINTAIN 24" MIN. VERTICAL SEPARATION AT ALL SANITARY SEWER & RCP STORM DRAIN CROSSINGS. WHERE ADEQUATE SEPARATIONS CANNOT BE ACHIEVED, SPECIFY DIP MATERIALS & A CONCRETE CRADLE HAVING 6" MIN. CLEARANCE (PER CORPUD DETAILS W-41 & S-49)

8. ALL OTHER UNDERGROUND UTILITIES SHALL CROSS WATER & SEWER FACILITIES WITH 18" MIN. VERTICAL SEPARATION REQUIRED

9. ANY NECESSARY FIELD REVISIONS ARE SUBJECT TO REVIEW & APPROVAL OF AN AMENDED PLAN &/OR PROFILE BY THE CITY OF RALEIGH PUBLIC UTILITIES DEPARTMENT PRIOR TO CONSTRUCTION

10. CONTRACTOR SHALL MAINTAIN CONTINUOUS WATER & SEWER SERVICE TO EXISTING RESIDENCES & BUSINESSES THROUGHOUT CONSTRUCTION OF PROJECT. ANY NECESSARY SERVICE INTERRUPTIONS SHALL BE PRECEDED BY A 24 HOUR ADVANCE NOTICE TO THE CITY OF RALEIGH PUBLIC UTILITIES DEPARTMENT

11. 3.0' MINIMUM COVER IS REQUIRED ON ALL WATER MAINS & SEWER FORCEMAINS. 4.0' MINIMUM COVER IS REQUIRED ON ALL REUSE MAINS

12. IT IS THE DEVELOPER'S RESPONSIBILITY TO ABANDON OR REMOVE EXISTING WATER & SEWER SERVICES NOT BEING USED IN REDEVELOPMENT OF A SITE UNLESS OTHERWISE DIRECTED BY THE CITY OF RALEIGH PUBLIC UTILITIES DEPARTMENT. THIS INCLUDES ABANDONING TAP AT MAIN & REMOVAL OF SERVICE FROM ROW OR EASEMENT PER CORPUD HANDBOOK PROCEDURE

13. INSTALL ¾" COPPER* WATER SERVICES WITH METERS LOCATED AT ROW OR WITHIN A 2'X2' WATERLINE EASEMENT IMMEDIATELY ADJACENT. NOTE: IT IS THE APPLICANT'S RESPONSIBILITY TO PROPERLY SIZE THE WATER SERVICE FOR EACH CONNECTION TO PROVIDE ADEQUATE FLOW & PRESSURE

14. INSTALL 4" PVC* SEWER SERVICES @ 1.0% MINIMUM GRADE WITH CLEANOUTS LOCATED AT ROW OR EASEMENT LINE & SPACED EVERY 75 LINEAR FEET MAXIMUM

15. PRESSURE REDUCING VALVES ARE REQUIRED ON ALL WATER SERVICES EXCEEDING 80 PSI; BACKWATER VALVES ARE
REQUIRED ON ALL SANITARY SEWER SERVICES HAVING BUILDING DRAINS LOWER THAN 1.0' ABOVE THE NEXT UPSTREAM MANHOLE

16. ALL ENVIRONMENTAL PERMITS APPLICABLE TO THE PROJECT MUST BE OBTAINED FROM NCDWQ, USACE &/OR FEMA FOR ANY RIPARIAN BUFFER, WETLAND &/OR FLOODPLAIN IMPACTS (RESPECTIVELY) PRIOR TO CONSTRUCTION.

17. NCDOT / RAILROAD ENCROACHMENT AGREEMENTS ARE REQUIRED FOR ANY UTILITY WORK (INCLUDING MAIN EXTENSIONS & SERVICE TAPS) WITHIN STATE OR RAILROAD ROW PRIOR TO CONSTRUCTION

18. GREASE INTERCEPTOR / OIL WATER SEPARATOR SIZING CALCULATIONS & INSTALLATION SPECIFICATIONS SHALL BE APPROVED BY THE CORPUD FOG PROGRAM COORDINATOR PRIOR TO ISSUANCE OF A BUILDING PERMIT. CONTACT TIM BEASLEY AT (919) 996-2334 OR TIMOTHY.BEASLEY@RALEIGHNC.GOV FOR MORE INFORMATION

19. CROSS-CONNECTION CONTROL PROTECTION DEVICES ARE REQUIRED BASED ON DEGREE OF HEALTH HAZARD INVOLVED AS LISTED IN APPENDIX-B OF THE RULES GOVERNING PUBLIC WATER SYSTEMS IN NORTH CAROLINA. THESE GUIDELINES ARE THE MINIMUM REQUIREMENTS. THE DEVICES SHALL MEET AMERICAN SOCIETY OF SANITARY ENGINEERING (ASSE) STANDARDS OR BE ON THE UNIVERSITY OF SOUTHERN CALIFORNIA APPROVAL THE DEVICES SHALL BE INSTALLED AND TESTED (BOTH INITIAL AND PERIODIC TESTING THEREAFTER) IN ACCORDANCE WITH THE MANUFACTURER'S RECOMMENDATIONS OR THE LOCAL CROSS-CONNECTION CONTROL PROGRAM, WHICHEVER IS MORE STRINGENT. CONTACT JOANIE HARTLEY AT (919) 996-5923 OR JOANIE.HARTLEY@RALEIGHNC.GOV FOR MORE INFORMATION

EXISTING CONDITIONS LEGEND

EXISTING IRON PIPE	EIP	WATER METER	
IRON PIPE SET	IPS	WATER VALVE	
SOLID IRON BAR	IRON BAR	TELEPHONE PEDESTAL	TLP
CONCRETE MONUMENT FOUND	CMF	CATCH BASIN	
RAILROAD SPIKE	RR	DROP INLET	
LIGHT POLE			
PHONE BOX UNDERGROUND			
TRAFFIC SIGNAL BOX			
ELECTRIC BOX	E		
ELECTRIC METER			
POWER POLE			
FIRE HYDRANT			

LINETYPES

PROPERTY LINE
LINE NOT SURVEYED
FENCE — XX
WATER LINE — W
RECLAIM WATER — R
FIBER OPTIC — FO
GAS — G
TELEPHONE — T

ABBREVIATIONS

FDC - FIRE DEPARTMENT CONNECTION
BFP - BACKFLOW PREVENTER
MH - MANHOLE
CABC - COMPACTED AGGREGATE BASE COUSE

WithersRavenel
Engineers | Planners
137 S Wilmington Street | Suite 200 | Raleigh, NC 27601 | t: 919.469.3340 | license # F-1479
www.withersravenel.com

PROJECT # SP 22-02
ROLESVILLE PUBLIC WORKS FACILITY
ROLESVILLE, NORTH CAROLINA

GENERAL NOTES AND LEGEND

Job No. 02210710.00	
Date 7/1/2022	Drawn By DBG
Checked By PED	Designer PED/DBG

NORTH CAROLINA PROFESSIONAL SEAL 049219 ENGINEER PAUL DEVLIN
7/1/2022

Revisions

Sheet No.
C0.02

DocuSign Envelope ID: 672FB3B7-31B2-45B2-A4A7-F22AFCD50B2E

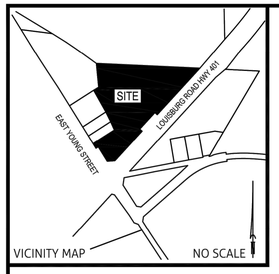

VICINITY MAP NO SCALE

1. NO NGS MONUMENT FOUND WITHIN 2,000 FEET OF THE SITE.

2. THE FOLLOWING INFORMATION WAS USED TO OBTAIN NC GRID NAD 83 (2011), NAVD 88 (GEOID 12B)STATE PLANE COORDINATES (SPC) FOR THIS PROJECT:
   - 2.1. CLASS OF SURVEY: URBAN LAND SURVEYS (CLASS A)
   - 2.2. POSITIONAL ACCURACY: 0.03' (H), 0.07' (V)
   - 2.3. GPS FIELD PROCEDURE: VRS
   - 2.4. DATE OF SURVEY: 04/26/2021
   - 2.5. DATUM/EPOCH: NAD 83 (2011), EPOCH 2010.00
   - 2.6. PUBLISHED DATE/FIXED CONTROL USED: VRS, NCRD
   - 2.7. GEOID MODEL: GEOID 12B
   - 2.8. COMBINED GRID FACTOR: 0.999924618
   - 2.9. UNITS: U.S. SURVEY FEET
   - 2.10. GRID/GROUND POINT: Y(N) 788,839.69 X(E) 2,162,652.50

3. ALL DISTANCES ARE HORIZONTAL GROUND DISTANCES IN U.S. SURVEY FEET UNLESS OTHERWISE NOTED.

4. ALL AREAS DERIVED BY THE COORDINATE COMPUTATION METHOD.

5. PROPERTY SUBJECT TO ALL EASEMENTS AND RESTRICTIONS OF RECORD. THIS PLAT IS A CORRECT REPRESENTATION OF THE LAND PLATTED AND HAS BEEN PREPARED IN CONFORMITY WITH NORTH CAROLINA STANDARDS, G.S. 47-30, AND REQUIREMENTS OF LAW, BUT A NORTH CAROLINA LICENSED ATTORNEY-AT-LAW SHOULD BE CONSULTED REGARDING CORRECT OWNERSHIP, WIDTH, AND LOCATION OF EASEMENTS AND OTHER TITLE QUESTIONS REVEALED BY TITLE EXAMINATION.

6. LINES NOT SURVEYED ARE SHOWN AS BROKEN LINES FROM INFORMATION REFERENCED ON THE FACE OF THIS PLAT.

7. SUBJECT PROPERTY IS NOT LOCATED WITHIN A FLOOD HAZARD AREA ACCORDING TO FLOOD INSURANCE RATE MAP 3720176800J DATED MAY, 02, 2006.

8. LOCATION OF UTILITIES, WHETHER PUBLIC OR PRIVATE, IS BASED UPON FIELD LOCATION OF VISIBLE APPURTENANCES ONLY. IT IS THE CONTRACTOR'S RESPONSIBILITY TO VERIFY LOCATION PRIOR TO COMMENCEMENT OF ANY CONSTRUCTION. WITHERSRAVENEL CANNOT ASSUME RESPONSIBILITY FOR MISIDENTIFICATION OR OMISSION OF UNDERGROUND UTILITIES.

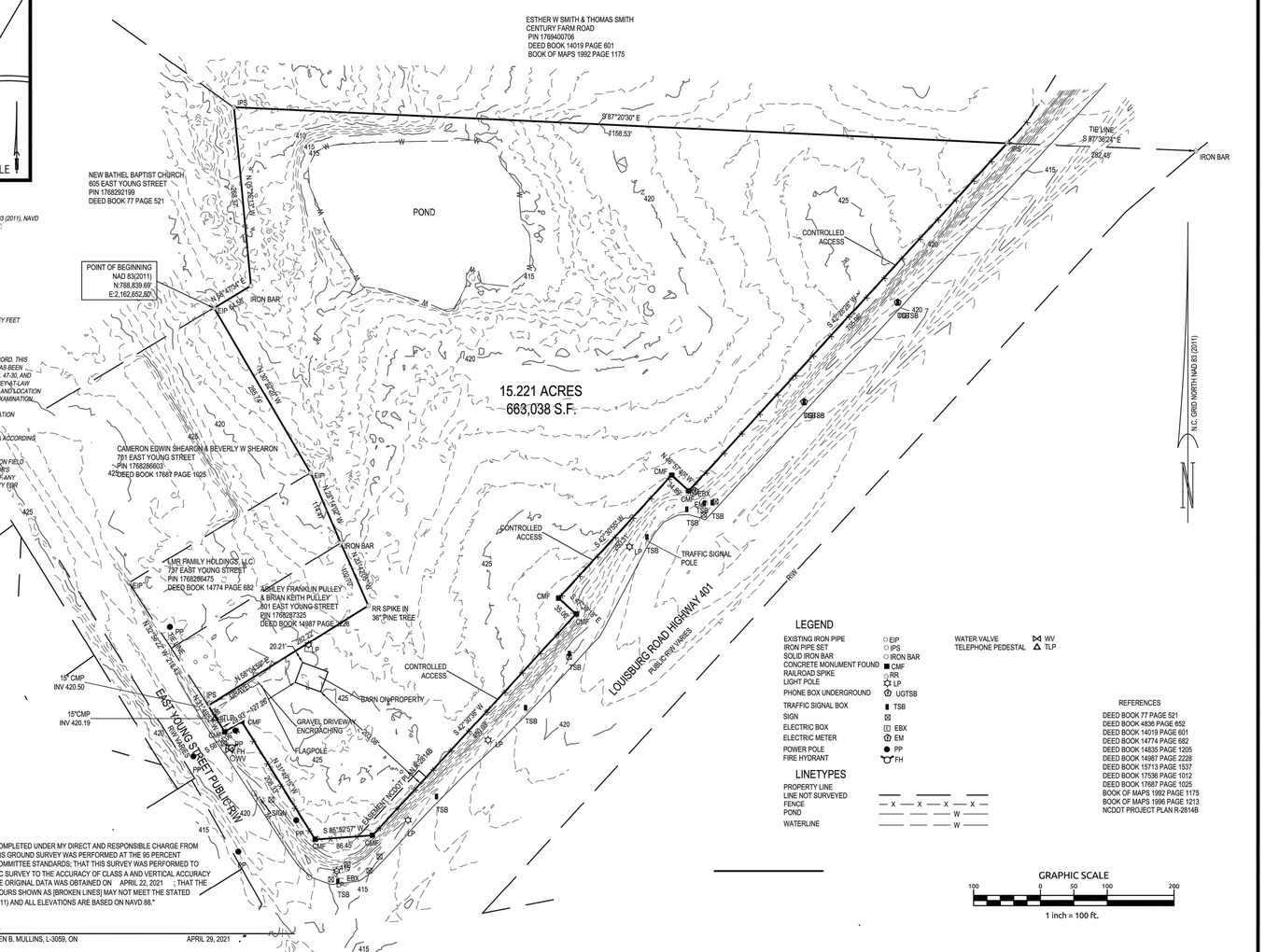

LEGEND

EXISTING IRON PIPE	○ EIP
IRON PIPE SET	○ IPS
SOLID IRON BAR	○ IRON BAR
CONCRETE MONUMENT FOUND	■ CMF
RAILROAD SPIKE	○ RR
LIGHT POLE	☼ LP
PHONE BOX UNDERGROUND	⬠ UGTSB
TRAFFIC SIGNAL BOX	▮ TSB
SIGN	⊠
ELECTRIC BOX	🄴 EBX
ELECTRIC METER	⬠ EM
POWER POLE	● PP
FIRE HYDRANT	FH
WATER VALVE	⋈ WV
TELEPHONE PEDESTAL	△ TLP

LINETYPES

PROPERTY LINE	———
LINE NOT SURVEYED	——— ——— ———
FENCE	— X — X — X — X —
POND	—— —— —— W ——
WATERLINE	—— —— —— W ——

REFERENCES
DEED BOOK 77 PAGE 521
DEED BOOK 4836 PAGE 652
DEED BOOK 14019 PAGE 601
DEED BOOK 14774 PAGE 682
DEED BOOK 14835 PAGE 1205
DEED BOOK 14987 PAGE 2228
DEED BOOK 15713 PAGE 1537
DEED BOOK 17536 PAGE 1012
DEED BOOK 17687 PAGE 1025
BOOK OF MAPS 1992 PAGE 1175
BOOK OF MAPS 1996 PAGE 1213
NCDOT PROJECT PLAN R-2814B

GRAPHIC SCALE
100 0 50 100 200
1 inch = 100 ft.

SURVEY CERTIFICATE

" I, STEPHEN B. MULLINS, CERTIFY THAT THIS PROJECT WAS COMPLETED UNDER MY DIRECT AND RESPONSIBLE CHARGE FROM AN ACTUAL SURVEY MADE UNDER MY SUPERVISION; THAT THIS GROUND SURVEY WAS PERFORMED AT THE 95 PERCENT CONFIDENCE LEVEL TO MEET FEDERAL GEOGRAPHIC DATA COMMITTEE STANDARDS; THAT THIS SURVEY WAS PERFORMED TO MEET THE REQUIREMENTS FOR A TOPOGRAPHIC/PLANIMETRIC SURVEY TO THE ACCURACY OF CLASS A AND VERTICAL ACCURACY WHEN APPLICABLE TO THE CLASS A STANDARD, AND THAT THE ORIGINAL DATA WAS OBTAINED ON APRIL 22, 2021 ; THAT THE SURVEY WAS COMPLETED ON APRIL 22, 2021 ; THAT CONTOURS SHOWN AS [BROKEN LINES] MAY NOT MEET THE STATED STANDARD; AND ALL COORDINATES ARE BASED ON NAD 83(2011) AND ALL ELEVATIONS ARE BASED ON NAVD 88."

DocuSigned by:
Stephen B Mullins
DFCEC79C4D7E4B2...

"THIS DOCUMENT ORIGINALLY ISSUED AND SEALED BY STEPHEN B. MULLINS, L-3059, ON APRIL 29, 2021 ."

SEAL L-3059
STEPHEN B. MULLINS

REVISIONS:	DATE: 4-27-2021
	SCALE: 1"=100'
	SURVEYED BY: ANDY B
	DRAWN BY: BURB
	CHECK & CLOSURE BY: BURB
	CAD FILE: Rolesville PW Site Topo.dwg
	PROJECT NO: 09200447.0

AN TOPOGRAPHICAL SURVEY OF:

REMAINING AREA #2 THE ROBERT ARTHUR ALEXANDER & SUSAN L. ALEXANDER PROPERTY

OWNED BY : NORTH CAROLINA DEPARTMENT OF TRANSPORTATION 805 EAST YOUNG STREET, DEED BOOK 14835 PAGE 1205

TOWNSHIP: WAKE FOREST	COUNTY: WAKE	STATE: NORTH CAROLINA
P.I.N.: 17678381703	ZONING: RW40	SHEET: 1 of 1

WithersRavenel
Engineers | Planners | Surveyors
115 MacKenan Drive | Cary, NC 27511
t: 919.469.3340 | license #: C-0832 | www.withersravenel.com

U:\20\20-0440\200447-Rolesville - Feasibility Studies\Geomatics\Survey\Res-Com\Drawings\Rolesville PW Site Topo.dwg- Friday, April 30, 2021 8:53:57 AM - MULLINS, BURB

WithersRavenel
Engineers | Planners
137 S Wilmington Street | Suite 200 | Raleigh, NC 27601 | t: 919.469.3340 | license #: F-1479
www.withersravenel.com

PROJECT # SP 22-02

ROLESVILLE PUBLIC WORKS FACILITY

ROLESVILLE, NORTH CAROLINA

SIGNED SURVEY

Job No. 02210710.00	
Date 7/1/2022	Drawn By DBG
Checked By PED	Designer PED/DBG

Revisions

Sheet No.
C0.03

K:\21\21-0710\210710-Rolesville Public Works Facility\CAD\Drawing Sets\Site Plan\Signed Survey.dwg - Wednesday, September 21, 2022 9:54:53 AM - PDEVLIN

WAKE COUNTY, NC
TAMMY L. BRUNNER
REGISTER OF DEEDS
PRESENTED & RECORDED ON
08-22-2022 AT 14:16:08
BOOK: BM2022 PAGE: 01527 - 01527

BKBM2022PG01527

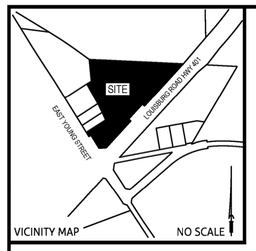

Meredith Gruber
I, _____ REVIEW OFFICER OF THE TOWN OF ROLESVILLE, WAKE COUNTY, CERTIFY THAT THE MAP OR PLAT TO WHICH THIS CERTIFICATION IS AFFIXED MEETS ALL STATUTORY REQUIREMENTS FOR RECORDING.

Meredith Gruber 8/22/2022
REVIEW OFFICER DATE

CERTIFICATE OF OWNERSHIP AND DEDICATION. I HEREBY CERTIFY THAT I AM THE OWNER OF THE PROPERTY SHOWN AND DESCRIBE HEREON, WHICH IS LOCATED IN THE SUBDIVISION JURISDICTION OF THE TOWN OF ROLESVILLE AND THAT I HEREBY ADOPT THIS PLAN OF SUBDIVISION WITH MY FREE CONSENT AND ESTABLISH MINIMUM BUILDING SETBACK LINES AS NOTED.

Kelly Arnold
8/18/2022
DATE

1. NO NGS MONUMENT FOUND WITHIN 2,000 FEET OF THE SITE.
2. THE FOLLOWING INFORMATION WAS USED TO OBTAIN NC GRID NAD 83 (2011), NAVD 88 (GEOID 12B)STATE PLANE COORDINATES (SPC) FOR THIS PROJECT:
   2.1. CLASS OF SURVEY: URBAN LAND SURVEYS (CLASS A)
   2.2. POSITIONAL ACCURACY: 0.07 (H), 0.07' (V)
   2.3. GPS FIELD PROCEDURE: VRS
   2.4. DATE OF SURVEY: 04/26/2021
   2.5. DATUMEPOCH: NAD 83 (2011), EPOCH 2010.00
   2.6. PUBLISHED/FIXED CONTROL USED: VRS, NCRD
   2.7. GEOID MODEL: GEOID 12B
   2.8. COMBINED GRID FACTOR: 0.999924618
   2.9. UNITS: U.S. SURVEY FEET
   2.10. GRID/GROUND POINT: Y(N) 788,839.69 X(E) 2,162,652.50
3. ALL DISTANCES ARE HORIZONTAL GROUND DISTANCES IN U.S. SURVEY FEET UNLESS OTHERWISE NOTED.
4. ALL AREAS DERIVED BY THE COORDINATE COMPUTATION METHOD.
5. PROPERTY SUBJECT TO ALL EASEMENTS AND RESTRICTIONS OF RECORD. THIS PLAT IS A CORRECT REPRESENTATION OF THE LAND PLATTED AND HAS BEEN PREPARED IN CONFORMITY WITH NORTH CAROLINA STANDARDS, G.S. 47-30, AND REQUIREMENTS OF LAW, BUT A NORTH CAROLINA LICENSED ATTORNEY-AT-LAW SHOULD BE CONSULTED REGARDING CORRECT OWNERSHIP, WIDTH, AND LOCATION OF EASEMENTS AND OTHER TITLE QUESTIONS REVEALED BY TITLE EXAMINATION.
6. LINES NOT SURVEYED ARE SHOWN AS BROKEN LINES FROM INFORMATION REFERENCED ON THE FACE OF THIS PLAT.
7. SUBJECT PROPERTY IS NOT LOCATED WITHIN A FLOOD HAZARD AREA ACCORDING TO FLOOD INSURANCE RATE MAP 3720176800J DATED MAY, 02, 2006.
8. LOCATION OF UTILITIES, WHETHER PUBLIC OR PRIVATE, IS BASED UPON FIELD LOCATION OF VISIBLE APPURTENANCES ONLY. IT IS THE CONTRACTOR'S RESPONSIBILITY TO VERIFY LOCATION PRIOR TO COMMENCEMENT OF ANY CONSTRUCTION. WITHERSRAVENEL CANNOT ASSUME RESPONSIBILITY FOR MISIDENTIFICATION OR OMISSION OF UNDERGROUND UTILITIES.

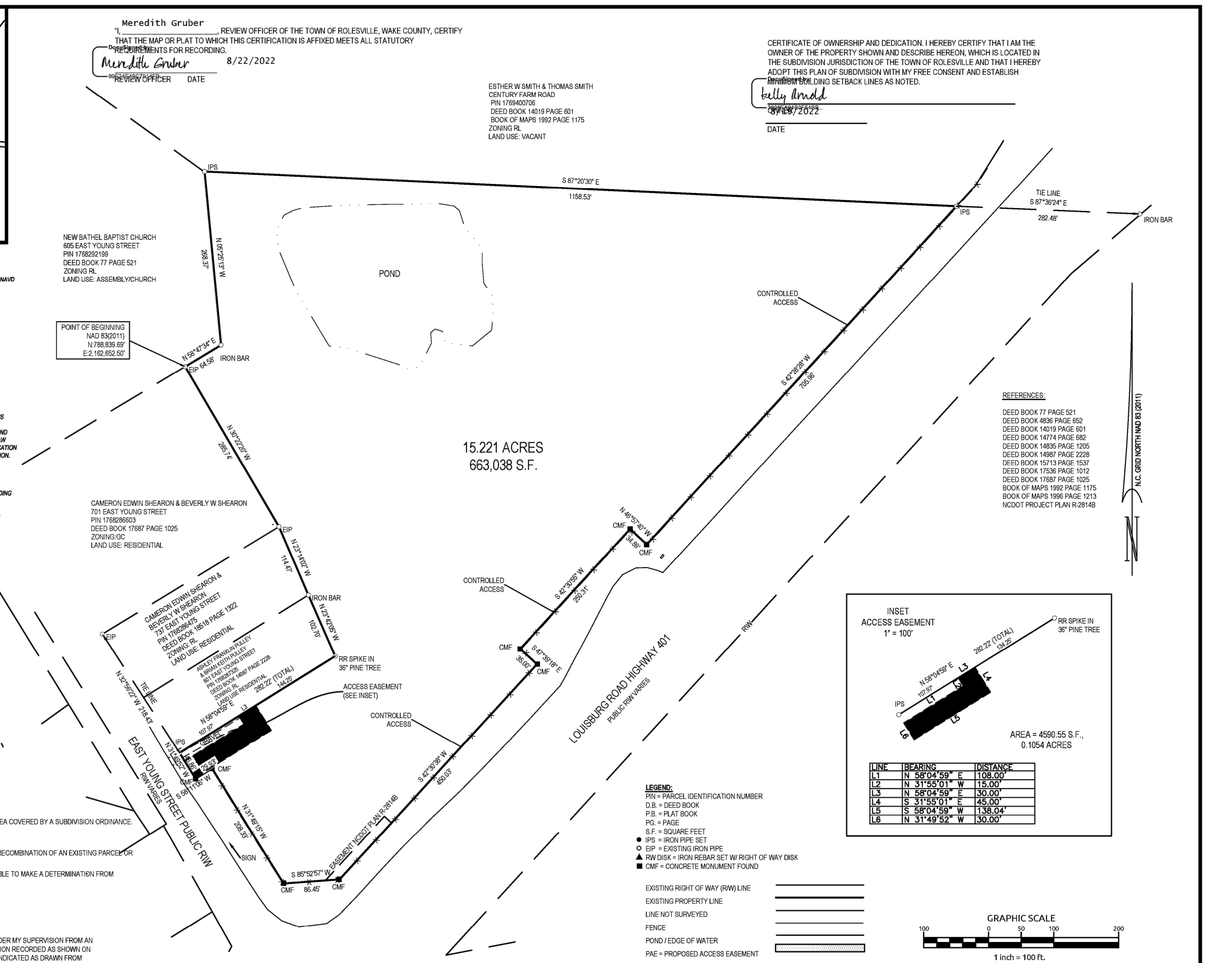

LINE	BEARING	DISTANCE
L1	N 58°04'59" E	108.00'
L2	N 31°55'01" W	15.00'
L3	N 58°04'59" E	30.00'
L4	S 31°55'01" E	45.00'
L5	S 58°04'59" W	138.04'
L6	N 31°49'52" W	30.00'

TYPE OF PLAT

- [ ] 1. THIS SURVEY CREATES A SUBDIVISION OF LAND IN AN AREA COVERED BY A SUBDIVISION ORDINANCE.
- [ ] 2. THIS SURVEY IS OF A LAND IN AN UNREGULATED AREA.
- [ ] 3. THIS SURVEY IS OF AN EXISTING PARCEL OR PARCELS.
- [ ] 4. THIS SURVEY IS OF ANOTHER CATEGORY, SUCH AS THE RECOMBINATION OF AN EXISTING PARCEL OR COURT ORDERED SURVEY.
- [ ] 5. FROM INFORMATION AVAILABLE, THE SURVEYORS IS UNABLE TO MAKE A DETERMINATION FROM PROVISION 1-4.

SURVEYOR'S CERTIFICATION

I, STEPHEN B. MULLINS, CERTIFY THAT THIS PLAT WAS DRAWN UNDER MY SUPERVISION FROM AN ACTUAL SURVEY MADE UNDER MY SUPERVISION (DEED DESCRIPTION RECORDED AS SHOWN ON HEREON); THAT THE BOUNDARIES NOT SURVEYED ARE CLEARLY INDICATED AS DRAWN FROM INFORMATION SHOWN ON THE FACE OF THIS MAP; THAT THE RATIO OF PRECISION OR POSITIONAL ACCURACY AS CALCULATED IS 1:25,000+; AND THAT THIS PLAT WAS PREPARED IN ACCORDANCE WITH G.S. 47-30 AS AMENDED. WITNESS MY ORIGINAL SIGNATURE, LICENSE NUMBER AND SEAL THIS 27th DAY OF JUNE, A.D. 2022.

DocuSigned by:
Stephen B. Mullins 8/19/2022
DF6E2FB2F0F3E48...
STEPHEN B. MULLINS, PROFESSIONAL LAND SURVEYOR
LICENSE NUMBER L-3059.

NORTH CAROLINA PROFESSIONAL SEAL L-3059 LAND SURVEYOR STEPHEN B. MULLINS

REVISIONS:	DATE: 6-29-2022
Comments 8-8-2022	SCALE: 1"=100'
	SURVEYED BY: ANDY B
	DRAWN BY: BURB
	CHECK & CLOSURE BY: BURB
	CAD FILE: Rolesville PW Plat.dwg
	PROJECT NO: 02210710

A BOUNDARY SURVEY OF:

ROLESVILLE PUBLIC WORKS FACILITY

OWNED BY : THE TOWN OF ROLESVILLE — 805 EAST YOUNG STREET, DEED BOOK 18520 PAGE 2293

TOWNSHIP: WAKE FOREST	COUNTY: WAKE	STATE: NORTH CAROLINA
P.I.N.: 1768381703	ZONING: RW40	SHEET: 1 of 1

WithersRavenel
Engineers | Planners | Surveyors
115 MacKenan Drive | Cary, NC 27511
t: 919.469.3340 | license #: C-0832 | www.withersravenel.com

K:\27121-07\02\02710-Rolesville Public Works Facility\Geomatics\Survey\Rw-Cont\Dwgs\Rolesville PW Plat.dwg Friday, August 19, 2022 10:19:42 AM - MULLINS, BURB

Submitted electronically by "WithersRavenel"
in compliance with North Carolina statutes governing recordable documents
and the terms of the submitter agreement with the Wake County Register of Deeds.

K:\27121-07\02\02710-Rolesville Public Works Facility\CAD\Drawing Sets\Site Plan\C0.04 - Recorded Plat.dwg - Wednesday, September 21, 2022 9:55:31 AM - PEDRLEN

WithersRavenel
Engineers | Planners
137 S Wilmington Street | Suite 200 | Raleigh, NC 27601 | t: 919.469.3340 | license #: F-1479
www.withersravenel.com

PROJECT # SP 22-02
ROLESVILLE PUBLIC WORKS FACILITY
ROLESVILLE, NORTH CAROLINA

RECORDED PLAT

Job No. 02210710.00	
Date 7/1/2022	Drawn By DBG
Checked By PED	Designer PED/DBG

Revisions

Sheet No.
C0.04

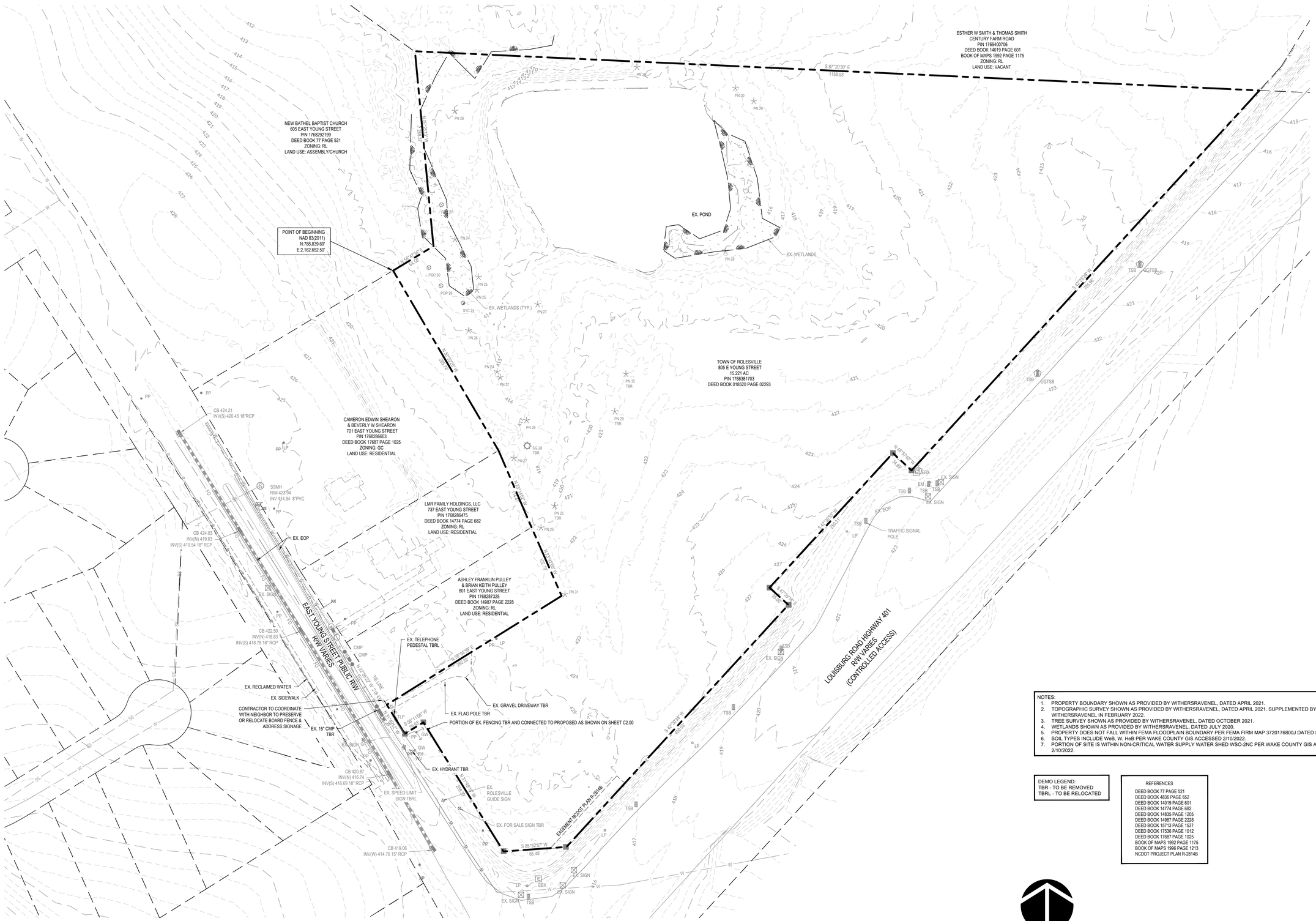

NOTES:
1. PROPERTY BOUNDARY SHOWN AS PROVIDED BY WITHERSRAVENEL, DATED APRIL 2021.
2. TOPOGRAPHIC SURVEY SHOWN AS PROVIDED BY WITHERSRAVENEL, DATED APRIL 2021. SUPPLEMENTED BY WITHERSRAVENEL IN FEBRUARY 2022.
3. TREE SURVEY SHOWN AS PROVIDED BY WITHERSRAVENEL, DATED OCTOBER 2021.
4. WETLANDS SHOWN AS PROVIDED BY WITHERSRAVENEL, DATED JULY 2020.
5. PROPERTY DOES NOT FALL WITHIN FEMA FLOODPLAIN BOUNDARY PER FEMA FIRM MAP 3720176800J DATED 5/2/2006.
6. SOIL TYPES INCLUDE WeB, W, HeB PER WAKE COUNTY GIS ACCESSED 2/10/2022.
7. PORTION OF SITE IS WITHIN NON-CRITICAL WATER SUPPLY WATER SHED WSO-2NC PER WAKE COUNTY GIS ACCESSED 2/10/2022.

DEMO LEGEND:
TBR - TO BE REMOVED
TBRL - TO BE RELOCATED

REFERENCES
DEED BOOK 77 PAGE 521
DEED BOOK 4836 PAGE 652
DEED BOOK 14019 PAGE 601
DEED BOOK 14774 PAGE 682
DEED BOOK 14835 PAGE 1205
DEED BOOK 14987 PAGE 2228
DEED BOOK 15713 PAGE 1537
DEED BOOK 17536 PAGE 1012
DEED BOOK 17687 PAGE 1025
BOOK OF MAPS 1992 PAGE 1175
BOOK OF MAPS 1996 PAGE 1213
NCDOT PROJECT PLAN R-2814B

WithersRavenel
Engineers | Planners
137 S Wilmington Street | Suite 200 | Raleigh, NC 27601 | t: 919.469.3340 | license #: F-1479
www.withersravenel.com

PROJECT # SP 22-02

ROLESVILLE PUBLIC WORKS FACILITY

ROLESVILLE, NORTH CAROLINA

EXISTING CONDITIONS & DEMOLITION PLAN

Job No. 02210710.00	
Date 7/1/2022	Drawn By DBG
Checked By PED	Designer PED/DBG

DocuSigned by:
D66BFDDE6B04494
049219
PAUL DEVLIN
7/1/2022

Revisions

Sheet No.
C1.00

K:\21\21-0710\210710-Rolesville Public Works Facility\CAD\Drawing Sets\Site Plan\C1.0 - Existing Conditions.dwg - Wednesday, September 21, 2022 9:56:39 AM - PDEVLIN

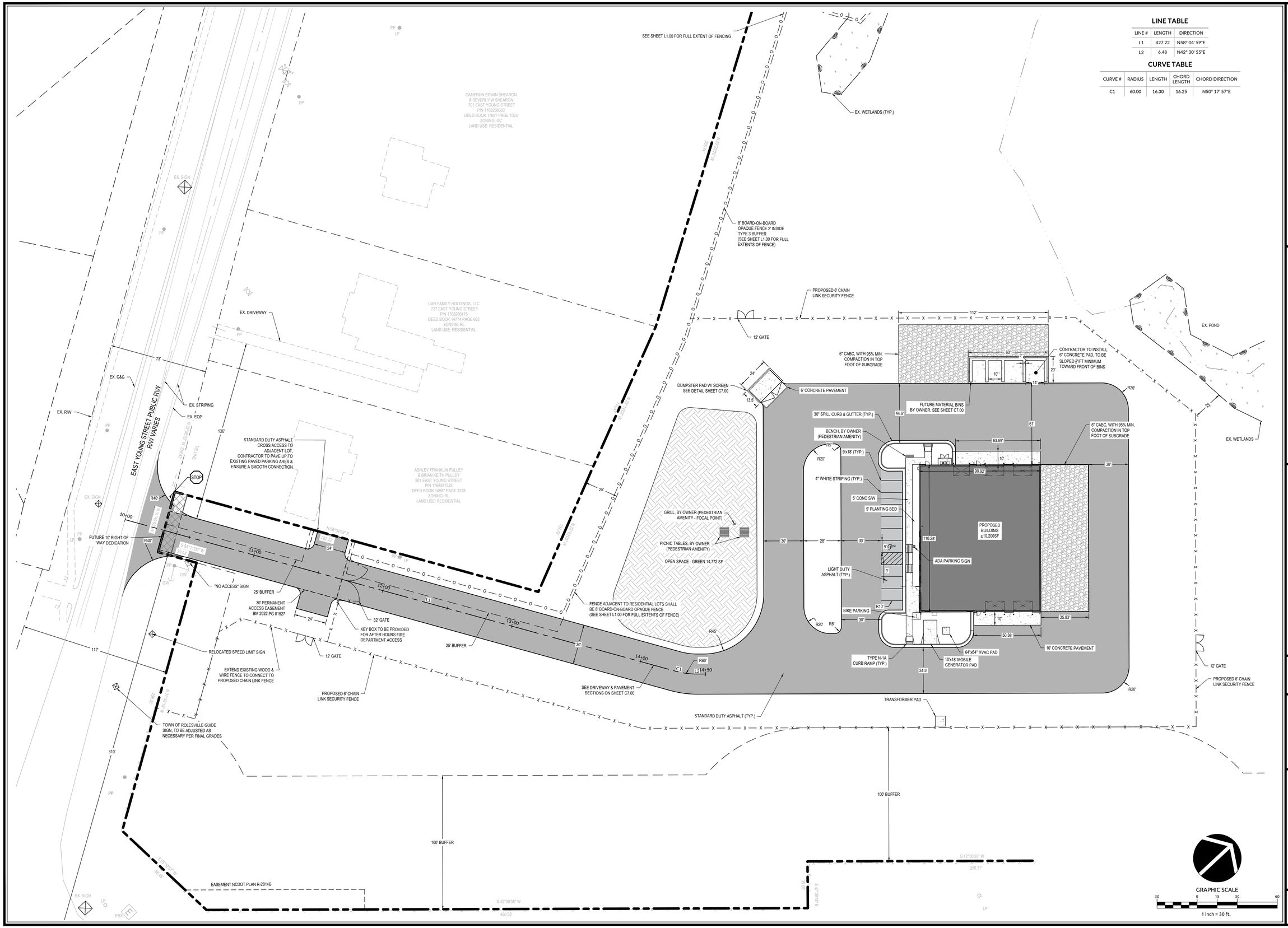

LINE TABLE

LINE #	LENGTH	DIRECTION
L1	427.22	N58° 04' 59"E
L2	6.48	N42° 30' 55"E

CURVE TABLE

CURVE #	RADIUS	LENGTH	CHORD LENGTH	CHORD DIRECTION
C1	60.00	16.30	16.25	N50° 17' 57"E

WithersRavenel
Engineers | Planners
137 S Wilmington Street | Suite 200 | Raleigh, NC 27601 | t: 919.469.3340 | license # F-1479
www.witherasravenel.com

PROJECT # SP 22-02

ROLESVILLE PUBLIC WORKS FACILITY

ROLESVILLE, NORTH CAROLINA

SITE PLAN

Job No. 02210710.00	
Date 7/1/2022	Drawn By DBG
Checked By PED	Designer PED/DBG

NORTH CAROLINA PROFESSIONAL SEAL 049219 ENGINEER PAUL DEVLIN
Date: 7/1/2022

Revisions

Sheet No.
C2.00

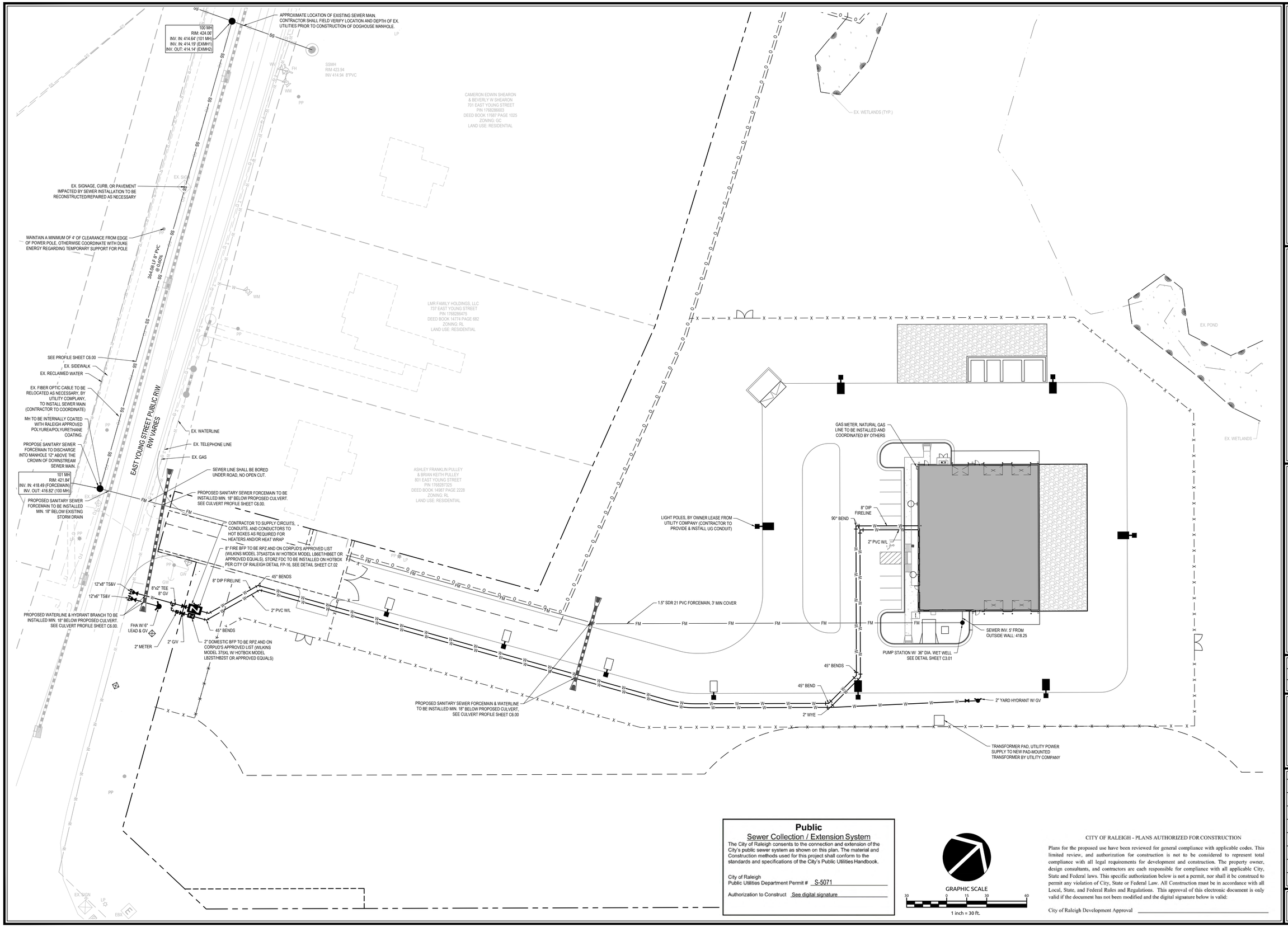

Public

Sewer Collection / Extension System

The City of Raleigh consents to the connection and extension of the City's public sewer system as shown on this plan. The material and Construction methods used for this project shall conform to the standards and specifications of the City's Public Utilities Handbook.

City of Raleigh
Public Utilities Department Permit # S-5071

Authorization to Construct See digital signature

GRAPHIC SCALE

30 0 15 30 60

1 inch = 30 ft.

CITY OF RALEIGH - PLANS AUTHORIZED FOR CONSTRUCTION

Plans for the proposed use have been reviewed for general compliance with applicable codes. This limited review, and authorization for construction is not to be considered to represent total compliance with all legal requirements for development and construction. The property owner, design consultants, and contractors are each responsible for compliance with all applicable City, State and Federal laws. This specific authorization below is not a permit, nor shall it be construed to permit any violation of City, State or Federal Law. All Construction must be in accordance with all Local, State, and Federal Rules and Regulations. This approval of this electronic document is only valid if the document has not been modified and the digital signature below is valid:

City of Raleigh Development Approval _____

WithersRavenel
Engineers | Planners
137 S Wilmington Street | Suite 200 | Raleigh, NC 27601 | t: 919.469.3340 | license #: F-1479
www.witherseavenel.com

PROJECT # SP 22-02

ROLESVILLE PUBLIC WORKS FACILITY

ROLESVILLE, NORTH CAROLINA

UTILITY PLAN

Job No. 02210710.00	
Date 7/1/2022	Drawn By DBG
Checked By PED	Designer PED/DBG

Documents originally issued on July 1, 2022 and sealed with the NORTH CAROLINA PROFESSIONAL SEAL 049219 ENGINEER PAUL DEVLIN. Signature on file. Printed copies of this document are not considered signed and sealed. 7/1/2022

Revisions

Sheet No.
C3.00

K:\27127-07\02210710 Rolesville Public Works Facility\CAD\Drawing Sets\Site Plan\C3.0 - Utility Plan.dwg Friday, September 23, 2022 11:32:35 AM - ATXVLOR

PUMP STATION PARAMETERS	
PUMPING RATE	25 GPM
TOTAL DYNAMIC HEAD	34 FT
MOTOR SPEED	3,500 RPM (MAX)
POWER	2 HP
VOLTAGE	208 V
PHASE	1 ∅
A	63 INCHES
B	00 INCHES
C	06 INCHES
D	06 INCHES
E	06 INCHES
F	18 INCHES
G	36 INCHES
H	36 INCHES (MIN)

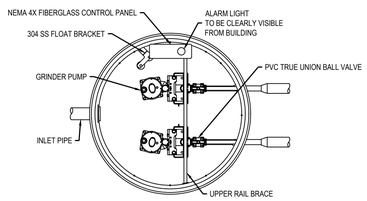

PLAN

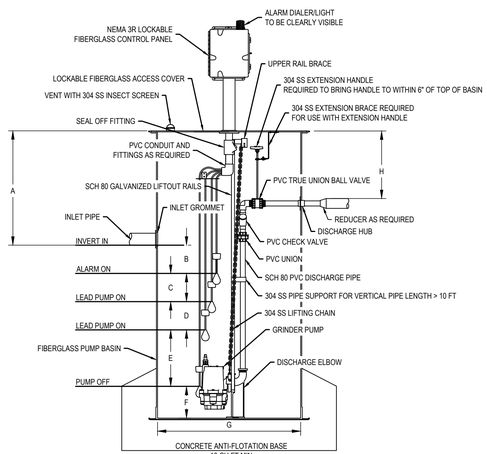

SECTION

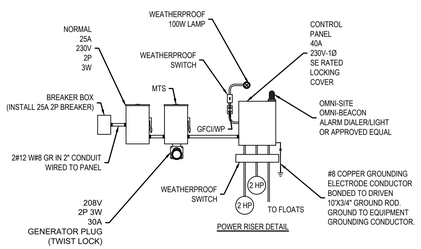

POWER RISER DETAIL

DUPLEX GRINDER PUMP STATION

NOT TO SCALE

NOTES:

1. THE BEDDING AND EMBEDMENT MATERIAL SHALL BE COMPACTED TO A MINIMUM OF 95% STANDARD PROCTOR DENSITY FOR CLASS I MATERIALS.
2. A MINIMUM COVER OF 36" SHALL BE MAINTAINED OVER ALL INSTALLED PIPELINES.
3. SHOP DRAWINGS OF PUMP STATION MUST BE SUBMITTED TO ENGINEER FOR APPROVAL PRIOR TO CONSTRUCTION.
4. DUPLEX PUMP CONTROL PANEL INCLUDES INDIVIDUAL CIRCUIT BREAKERS, MOTOR STARTER, TERMINAL STRIP AND GROUND BUS IN A LOCKABLE NEMA 3R ENCLOSURE. THE CONTROLLER SHALL HAVE THREE LEVEL SENSING POINTS: PUMP OFF, PUMP ON, AND HIGH WATER ALARM. CONTROL PANEL AND CONTROLS SHALL BE SUPPLIED BY PUMP MANUFACTURER.
5. THE CONTROL PANEL AND ALARM MAY BE ATTACHED TO THE BUILDING EXTERIOR AT THE OWNERS OPTION OR POST-MOUNTED 36" ABOVE GRADE AT A LOCATION CONVENIENT TO THE OWNER.
6. THE ALARM CIRCUIT SHALL SENSE HIGH WATER LEVEL AND INITIATE THE ALARM. AN ALARM RESET SWITCH AND ALARM TEST SWITCH SHALL BE PROVIDED ON THE CONTROL PANEL DOOR. A HIGH VISIBILITY RED ALARM LIGHT AND AUDIBLE ALARM SHALL BE MOUNTED ON THE EXTERIOR OF THE PANEL.
7. LAG PUMP TO HAVE A STAGGERED START SO BOTH PUMPS CANNOT BE STARTED SIMULTANEOUSLY.
8. LIQUID LEVEL SENSOR SHALL BE ADJUSTABLE LEVEL MERCURY FLOAT SWITCH SUPPLIED BY THE MANUFACTURER.
6. POSITION THE FLOATS IN ACCORDANCE WITH MANUFACTURER'S RECOMMENDATIONS.
7. A RECEPTACLE (120 VOLTS) WITH GROUND FAULT PROTECTION AND A WATER PROOF COVER SHALL BE MOUNTED ON THE EXTERIOR OF THE PUMP CONTROL PANEL.
8. UNDERGROUND ELECTRICAL CONDUIT SHALL BE SCHEDULE 40 PVC DIRECT BURIAL WITH A MINIMUM DEPTH OF 30". ABOVE GROUND ELECTRICAL CONDUIT SHALL BE RIGID GALVANIZED STEEL.
9. WET WELL SHALL BE ATTACHED TO THE CONCRETE ANCHOR TO PREVENT FLOTATION.
10. ALL CONTROLS AND WIRING SHALL BE FURNISHED AND INSTALLED IN ACCORDANCE WITH THE NATIONAL ELECTRIC CODE AND ANY APPLICABLE STATE AND LOCAL CODES.
6. THE ELECTRICAL COMPONENTS SHALL BE CONNECTED TO THE PROPERTY OWNER'S MAIN CONTROL PANEL IN ACCORDANCE WITH NEC AND ANY APPLICABLE STATE AND LOCAL CODES. CONTRACTOR TO OBTAIN ALL LOCAL PERMITS REQUIRED.
7. ACCEPTABLE PUMP MANUFACTURERS ARE ABS, HYDROMATIC, LIBERTY, OR APPROVED EQUAL.
8. THE ALARM DIALER/LIGHT SHALL BE THE OMNI-SITE OMNI-BEACON OR APPROVED EQUAL.

Public

Sewer Collection / Extension System

The City of Raleigh consents to the connection and extension of the City's public sewer system as shown on this plan. The material and Construction methods used for this project shall conform to the standards and specifications of the City's Public Utilities Handbook.

City of Raleigh
Public Utilities Department Permit # S-5071

Authorization to Construct See digital signature

CITY OF RALEIGH - PLANS AUTHORIZED FOR CONSTRUCTION

Plans for the proposed use have been reviewed for general compliance with applicable codes. This limited review, and authorization for construction is not to be considered to represent total compliance with all legal requirements for development and construction. The property owner, design consultants, and contractors are each responsible for compliance with all applicable City, State and Federal laws. This specific authorization below is not a permit, nor shall it be construed to permit any violation of City, State or Federal Law. All Construction must be in accordance with all Local, State, and Federal Rules and Regulations. This approval of this electronic document is only valid if the document has not been modified and the digital signature below is valid:

City of Raleigh Development Approval _____

WithersRavenel
Engineers | Planners
137 S Wilmington Street | Suite 200 | Raleigh, NC 27601 | t: 919.469.3940 | license # F-1479
www.withersravenel.com

PROJECT # SP 22-02

ROLESVILLE PUBLIC WORKS FACILITY

ROLESVILLE, NORTH CAROLINA

PUMP STATION DETAIL

Job No. 02210710.00	
Date 7/1/2022	Drawn By DBG
Checked By PED	Designer PED/DBG

NORTH CAROLINA SEAL 030282 ENGINEER DAVID A. MCCLURE, P.E.
DocuSigned by: David A. McClure
D0777E2BC9A405...
7/1/2022

Revisions

Sheet No.
C3.01

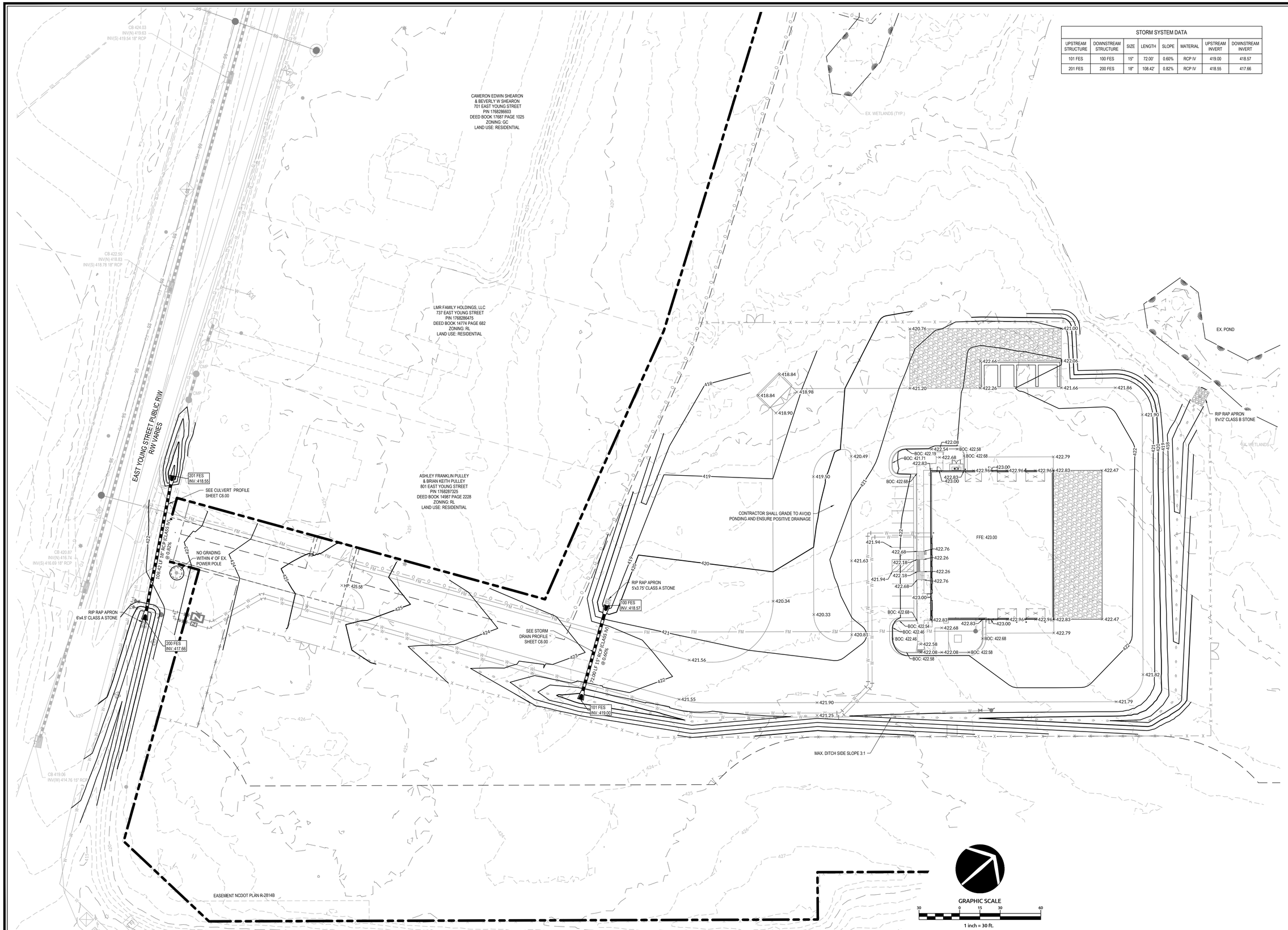

STORM SYSTEM DATA							
UPSTREAM STRUCTURE	DOWNSTREAM STRUCTURE	SIZE	LENGTH	SLOPE	MATERIAL	UPSTREAM INVERT	DOWNSTREAM INVERT
101 FES	100 FES	15"	72.00'	0.60%	RCP IV	419.00	418.57
201 FES	200 FES	18"	108.42'	0.82%	RCP IV	418.55	417.66

WithersRavenel
Engineers | Planners
137 S Wilmington Street | Suite 200 | Raleigh, NC 27601 | t: 919.469.3340 | license # F-1479
www.witherasravenel.com

PROJECT # SP 22-02

ROLESVILLE PUBLIC WORKS FACILITY

ROLESVILLE, NORTH CAROLINA

STORM DRAINAGE & GRADING PLAN

Job No. 02210710.00	
Date 7/1/2022	Drawn By DBG
Checked By PED	Designer PED/DBG

Registered Professional Engineer
SEAL
049219
NORTH CAROLINA
PROFESSIONAL
ENGINEER
PAUL DEVLIN
7/1/2022

Revisions

Sheet No.
C4.00

K:\2012\02710\02710-Rolesville Public Works Facility\CAD\Drawing Sets\Site Plan\CAD - Storm Drainage and Grading Plan.dwg Wednesday, September 21, 2022 9:39:40 AM DGLENN

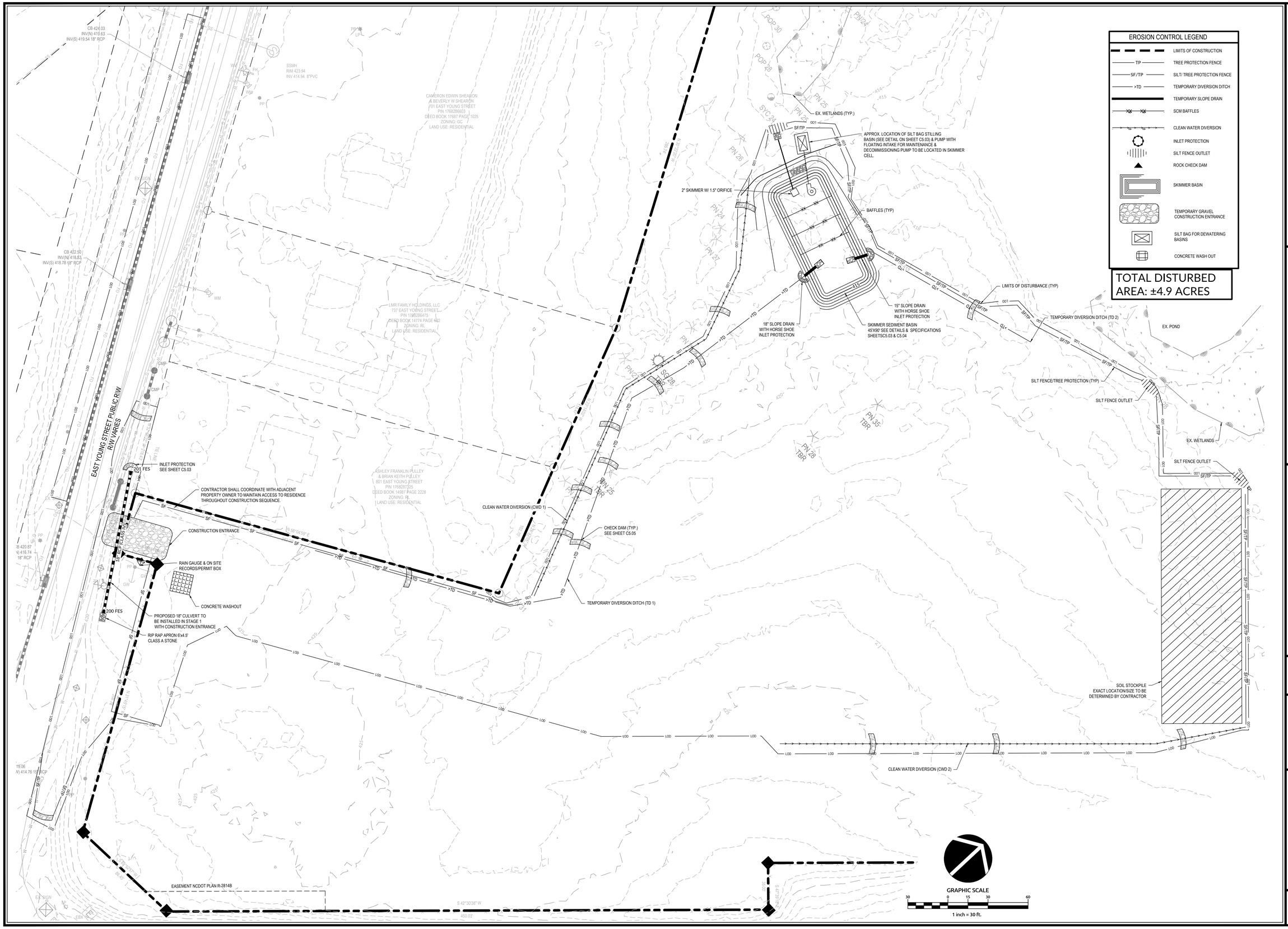

WithersRavenel
Engineers | Planners
137 S Wilmington Street | Suite 200 | Raleigh, NC 27601 | t: 919.469.3340 | license # F-1479
www.withersravenel.com

PROJECT # SP 22-02

ROLESVILLE PUBLIC WORKS FACILITY

ROLESVILLE, NORTH CAROLINA

EROSION CONTROL - STAGE 1

Job No. 02210710.00	
Date 7/1/2022	Drawn By DBG
Checked By PED	Designer PED/DBG

NORTH CAROLINA PROFESSIONAL SEAL 049219 ENGINEER PAUL DEVLIN
7/1/2022

Revisions

Sheet No.
C5.00

K:\31\21-07\02\210710-Rolesville Public Works Facility\CAD\Drawing Sets\Site Plan\C5.00 EROSION CONTROL - STAGE 1.dwg- Wednesday, September 21, 2022 10:00:50 AM - PDVLIN

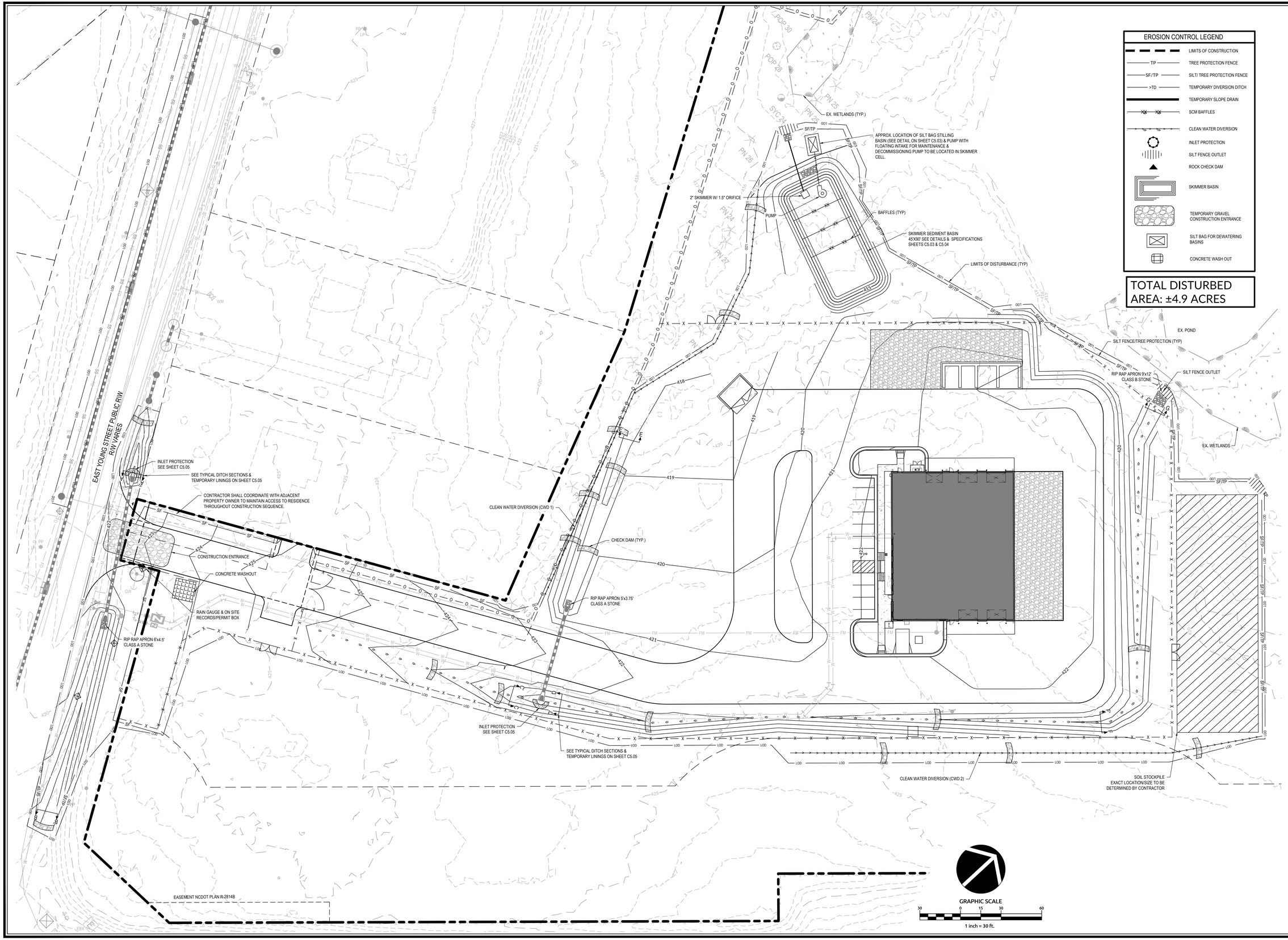

WithersRavenel
Engineers | Planners
137 S Wilmington Street | Suite 200 | Raleigh, NC 27601 | t: 919.469.3340 | license # F-1479
www.witherasravenel.com

PROJECT # SP 22-02

ROLESVILLE PUBLIC WORKS FACILITY

ROLESVILLE, NORTH CAROLINA

EROSION CONTROL - STAGE 2

Job No. 02210710.00	
Date 7/1/2022	Drawn By DBG
Checked By PED	Designer PED/DBG

NORTH CAROLINA PROFESSIONAL SEAL 049219 ENGINEER PAUL DEVLIN
Digitally signed by Paul Edward Devlin
DN: C=US, O=WithersRavenel, CN=Paul Edward Devlin, E=pdevlin@wrcnet.com
7/1/2022

Revisions

Sheet No.
C5.01

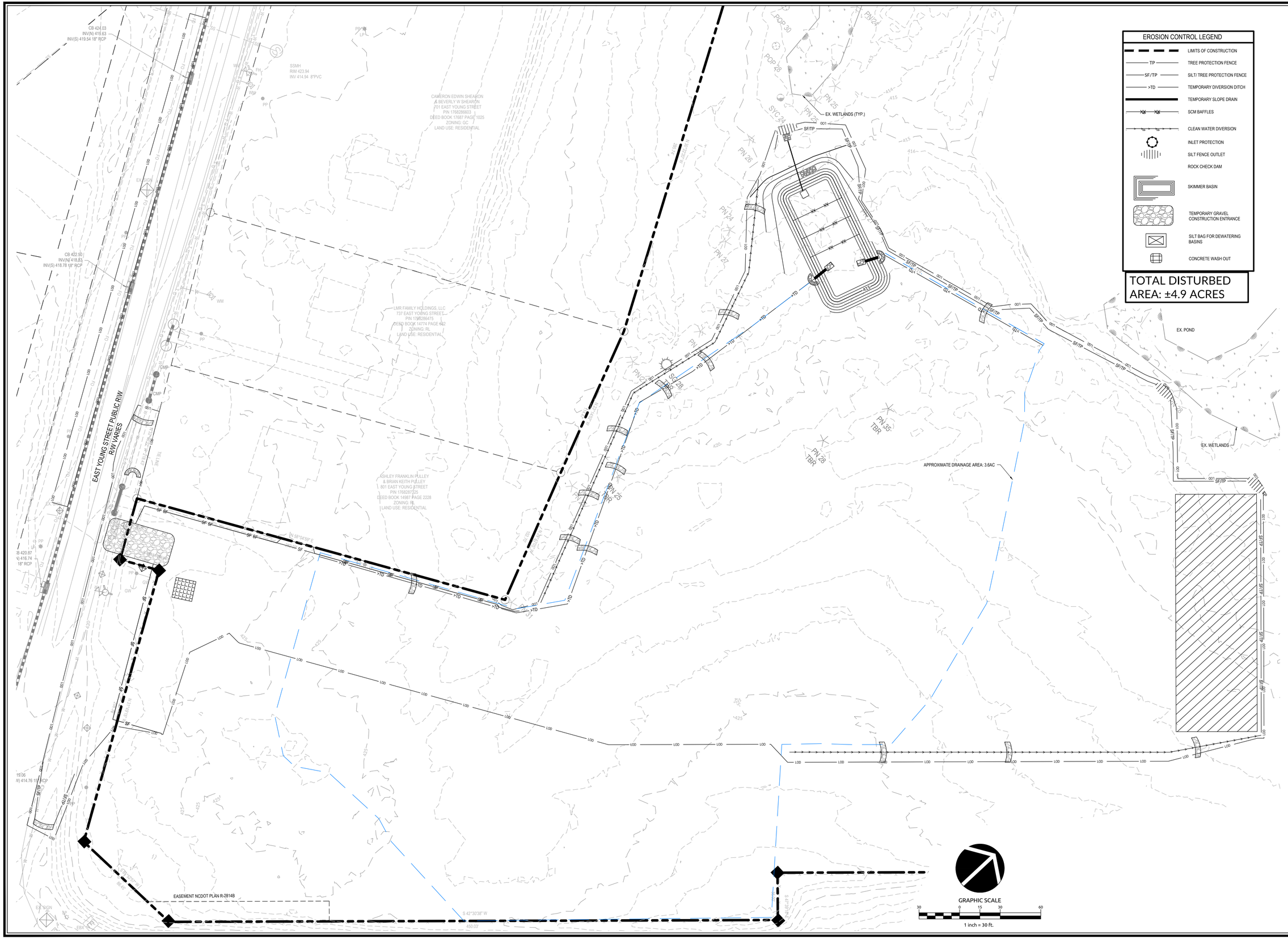

WithersRavenel
Engineers | Planners
137 S Wilmington Street | Suite 200 | Raleigh, NC 27601 | t: 919.469.3340 | license # F-1479
www.witherseravenel.com

PROJECT # SP 22-02
ROLESVILLE PUBLIC WORKS FACILITY
ROLESVILLE, NORTH CAROLINA

BASIN DRAINAGE AREA MAP

Job No. 02210710.00	
Date 7/1/2022	Drawn By DBG
Checked By PED	Designer PED/DBG

Registered Professional Engineer
NORTH CAROLINA
SEAL
049219
ENGINEER
PAUL DEVLIN
7/1/2022

Revisions

Sheet No.
C5.02

K:\C3\21-0710\210710-Rolesville Public Works Facility\CAD\Drawing Sets\Site Plan\C5.02 BASIN DRAINAGE AREA MAP.dwg - Wednesday, September 21, 2022 10:00:23 AM - PDEVLIN

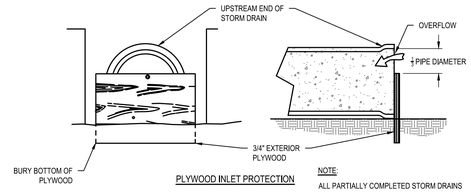

PLYWOOD INLET PROTECTION

NOTE:
ALL PARTIALLY COMPLETED STORM DRAINS SHALL BE PROTECTED AT THE END OF EACH DAY IN ACCORDANCE WITH THESE DETAILS.

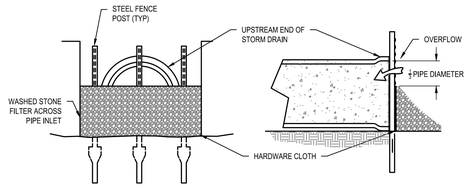

STONE FILTER INLET PROTECTION

MAINTENANCE NOTE:
INSPECT THE BARRIER AT LEAST WEEKLY AND AFTER EACH SIGNIFICANT (½ INCH OR GREATER) RAINFALL AND MAKE REPAIRS AS NEEDED. REMOVE SEDIMENT AS NECESSARY TO PROVIDE ADEQUATE STORAGE VOLUME FOR SUBSEQUENT RAINS. WHEN THE CONTRIBUTING DRAINAGE AREA HAS BEEN ADEQUATELY STABILIZED, REMOVE ALL MATERIALS AND ANY UNSTABLE SOIL, AND EITHER SALVAGE OR DISPOSE OF IT PROPERLY. BRING THE DISTURBED AREA TO PROPER GRADE, THEN SMOOTH AND COMPACT IT, APPROPRIATELY STABILIZE ALL BARE AREAS AROUND THE INLET.

PIPE INLET PROTECTION

NOT TO SCALE

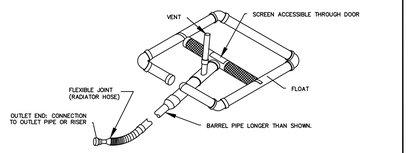

TEMPORARY SEDIMENT BASIN CLOSE-OUT PROCEDURE:
1. STABILIZE AND ESTABLISH VEGETATION ON AREAS DRAINING TO TEMPORARY SEDIMENT BASIN.
2. OBTAIN APPROVAL FROM EROSION CONTROL INSPECTOR TO REMOVE BASIN.
3. PUMP REMAINING WATER OUT OF SEDIMENT BASIN. ALL WATER PUMPED OUT OF BASIN SHALL BE DISCHARGED THROUGH A DEWATERING BAG.
4. REMOVE COIR BAFFLES, SKIMMER, TEMPORARY SLOPE DRAINS, RIP RAP, AND GEOTEXTILES FROM SEDIMENT BASIN.
5. FILL BASIN TO FINISHED GRADES SHOWN ON CONSTRUCTION DRAWINGS.
6. SEED AND MULCH TO ESTABLISH VEGETATION.

STANDARD SKIMMER DETAIL

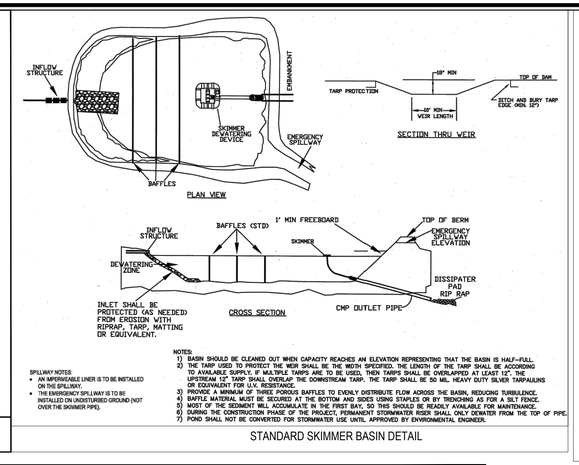

SPILLWAY NOTES:
- AN IMPERMEABLE LINER IS TO BE INSTALLED ON THE SPILLWAY.
- THE EMERGENCY SPILLWAY IS TO BE INSTALLED ON UNDISTURBED GROUND (NOT OVER THE SKIMMER PIPE).

NOTES:
1) BASIN SHOULD BE CLEANED OUT WHEN CAPACITY REACHES AN ELEVATION REPRESENTING THAT THE BASIN IS HALF-FULL.
2) THE TARP USED TO PROTECT THE WEIR SHALL BE THE WIDTH SPECIFIED. THE LENGTH OF THE TARP SHALL BE ACCORDING TO AVAILABLE SUPPLY. IF MULTIPLE TARPS ARE TO BE USED, THEN TARPS SHALL BE OVERLAPPED AT LEAST 12". THE UPSTREAM 12" TARP SHALL OVERLAP THE DOWNSTREAM TARP. THE TARP SHALL BE 50 ML. HEAVY DUTY SILVER TARPAULINS OR EQUIVALENT FOR U.V. RESISTANCE.
3) PROVIDE A MINIMUM OF THREE POROUS BAFFLES TO EVENLY DISTRIBUTE FLOW ACROSS THE BASIN, REDUCING TURBULENCE.
4) BAFFLE MATERIAL MUST BE SECURED AT THE BOTTOM AND SIDES USING STAPLES OR BY TRENCHING AS FOR A SILT FENCE.
5) MOST OF THE SEDIMENT WILL ACCUMULATE IN THE FIRST BAY, SO THIS SHOULD BE READILY AVAILABLE FOR MAINTENANCE.
6) DURING THE CONSTRUCTION PHASE OF THE PROJECT, PERMANENT STORMWATER RISER SHALL ONLY DEWATER FROM THE TOP OF PIPE.
7) POND SHALL NOT BE CONVERTED FOR STORMWATER USE UNTIL APPROVED BY ENVIRONMENTAL ENGINEER.

STANDARD SKIMMER BASIN DETAIL

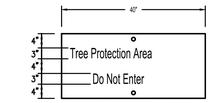

WEATHERPROOF SIGN AS SHOWN ABOVE. SEE NOTES BELOW FOR CONSTRUCTION AND SPACING DATA.

POST MAY BE EITHER 4"ø PINE, 2"ø OR 1.33 lb./LF STEEL

ORANGE, UV RESISTANT HIGH-TENSILE STRENGTH POLY BARRICADE FABRIC

NOTES:
1. WARNING SIGNS TO BE MADE OF DURABLE, WEATHERPROOF MATERIAL.
2. LETTERS ARE TO BE 3" HIGH MIN., CLEARLY LEGIBLE AND SPACED AS DETAILED.
3. SIGNS ARE TO BE PLACED NO GREATER THAN 200' ON CENTER.
4. PLACE SIGN AT EACH END OF LINEAR TREE PROTECTION AREA AND ON CENTER THEREAFTER FOR TREE PROTECTION AREAS LESS THAN 200' IN PERIMETER, PROVIDE NO LESS THAN ONE SIGN PER PROTECTION AREA.
5. ATTACH SIGNS SECURELY TO FENCE POST AND FABRIC.
6. MAINTAIN TREE PROTECTION FENCE THROUGHOUT DURATION OF PROJECT.

TREE PROTECTION FENCE

NTS

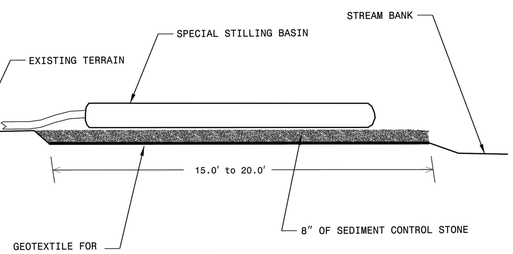

NOTES

USE NO. 5 OR NO. 57 STONE FOR SEDIMENT CONTROL STONE.
PROVIDE STABILIZED OUTLET TO STREAM BANK.
WOOD PALLETS MAY BE USED IN LIEU OF STONE AND GEOTEXTILE AS DIRECTED. A SUFFICIENT NUMBER OF PALLETS MUST BE PROVIDED TO ELEVATE THE ENTIRE SPECIAL STILLING BASIN ABOVE NATURAL GROUND.

NOT TO SCALE

SILT BAG STILLING BASIN FOR SKIMMER BASIN DECOMISSIONING

NOTES:
1. CONSTRUCT THE ENTRANCE TO THE SLOPE DRAIN OF A STANDARD FLARED-END SECTION OF PIPE WITH A MINIMUM 6-INCH METAL TOE PLATE (CROSS-SECTION VIEW). MAKE ALL FITTINGS WATERTIGHT. A STANDARD T-SECTION FITTING MAY ALSO BE USED AT THE INLET.
2. USE AN EARTHEN DIVERSION TO DIRECT SURFACE RUNOFF INTO THE TEMPORARY SLOPE DRAIN. MAKE THE HEIGHT OF THE BERM OVER THE DRAIN CONDUIT A MINIMUM OF 1.5 FT AND AT LEAST 6 INCHES HIGHER THAN THE ADJOINING BERM ON EITHER SIDE.
THE LOWEST POINT OF THE DIVERSION BERM SHOULD BE A MINIMUM OF 1 FT ABOVE THE TOP OF THE DRAIN SO THAT DESIGN FLOW CAN FREELY ENTER THE PIPE.
3. PROTECT THE OUTLET OF THE SLOPE DRAIN FROM EROSION WITH RIPRAP DISSIPATOR.

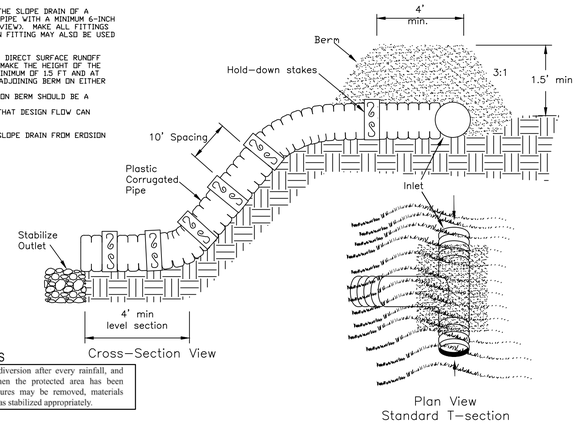

MAINTENANCE REQUIREMENTS
Inspect the slope drain and supporting diversion after every rainfall, and promptly make necessary repairs. When the protected area has been permanently stabilized, temporary measures may be removed, materials disposed of properly, and all disturbed areas stabilized appropriately.

STANDARD TEMPORARY SLOPE DRAIN

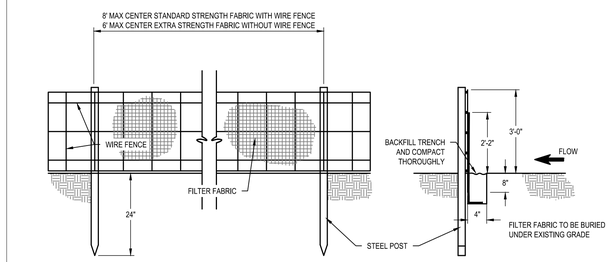

MAINTENANCE NOTES:
1. INSPECT SEDIMENT FENCES AT LEAST ONCE A WEEK AND AFTER EACH RAINFALL. MAKE ANY REQUIRED REPAIRS IMMEDIATELY.
2. SHOULD THE FABRIC OF A SEDIMENT FENCE COLLAPSE, TEAR, DECOMPOSE OR BECOME INEFFECTIVE, REPLACE IT PROMPTLY.
3. REMOVE SEDIMENT DEPOSITS AS NECESSARY TO PROVIDE ADEQUATE STORAGE VOLUME FOR THE NEXT RAIN AND TO REDUCE PRESSURE ON THE FENCE. TAKE CARE TO AVOID UNDERMINING THE FENCE DURING CLEANOUT.
4. REMOVE ALL FENCING MATERIALS AND UNSTABLE SEDIMENT DEPOSITS AND BRING THE AREA TO GRADE AND STABILIZE IT AFTER THE CONTRIBUTING DRAINAGE AREA HAS BEEN PROPERLY STABILIZED.

SILT FENCE

NOT TO SCALE

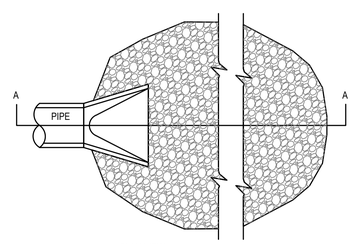

PLAN VIEW

MAINTENANCE NOTE:
INSPECT RIPRAP OUTLET STRUCTURES WEEKLY AND AFTER SIGNIFICANT (½" OR GREATER) RAINFALL EVENTS TO SEE IF ANY EROSION AROUND OR BELOW THE RIPRAP HAS TAKEN PLACE, OR IF STONES HAVE BEEN DISLODGED. IMMEDIATELY MAKE ALL NEEDED REPAIRS TO PREVENT FURTHER DAMAGE.

NOTES:
1. L = THE LENGTH OF THE RIPRAP APRON.
2. d = 1.5 TIMES THE MAXIMUM STONE DIAMETER BUT NOT LESS THAN 6" (INCHES).
3. IN A WELL-DEFINED CHANNEL EXTEND THE APRON UP THE CHANNEL BANKS TO AN ELEVATION OF 6" (INCHES) ABOVE THE MAXIMUM TAILWATER DEPTH OR TO THE TOP OF THE BANK, WHICHEVER IS LESS.
4. A FILTER BLANKET OR FILTER FABRIC SHOULD BE INSTALLED BETWEEN THE RIPRAP AND SOIL FOUNDATION.

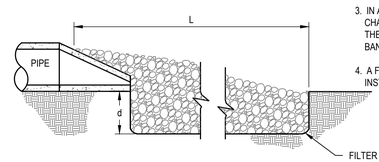

SECTION A-A

RIP-RAP OUTLET PROTECTION FOR WELL DEFINED CHANNEL

NOT TO SCALE

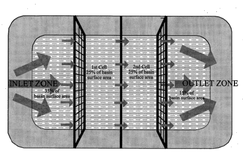

NOTES:
1. BAFFLE MATERIAL SHOULD BE SECURED AT THE BOTTOM AND SIDES USING STAPLES OR BY TRENCHING AS FOR SILT FENCE.
2. MOST OF THE SEDIMENT WILL ACCUMULATE IN THE 1ST BAY, WHICH SHOULD BE READILY ACCESSIBLE FOR MAINTENANCE.
3. PROVIDE 3 BAFFLES (USE TWO IF LESS THAN 20 FEET IN LENGTH). PROVIDE 5 BAFFLES FOR DRAINAGE AREAS GREATER THAN 10 ACRES.
4. BAFFLE SHALL BE 700 GSM COIR EROSION BLANKET.
5. TOPS OF BAFFLES SHOULD BE 2 INCHES LOWER THAN THE TOP OF THE BERMS
6. INSPECT BAFFLES FOR REPAIR ONCE A WEEK AND AFTER EACH RAINFALL

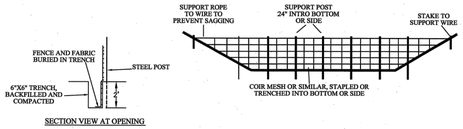

STANDARD SKIMMER BASIN DETAIL

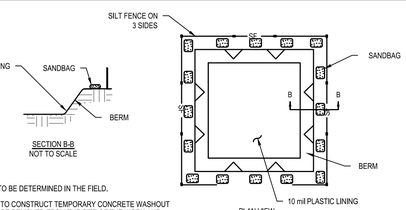

SECTION B-B
NOT TO SCALE

PLAN VIEW
NOT TO SCALE

NOTES:
1. ACTUAL LAYOUT TO BE DETERMINED IN THE FIELD.
2. MATERIALS USED TO CONSTRUCT TEMPORARY CONCRETE WASHOUT FACILITIES SHALL BE REMOVED FROM THE SITE OF THE WORK AND DISPOSED OF OR RECYCLED.
3. HOLES, DEPRESSIONS OR OTHER GROUND DISTURBANCE CAUSED BY THE REMOVAL OF THE TEMPORARY CONCRETE WASHOUT FACILITIES SHALL BE BACKFILLED, REPAIRED, AND STABILIZED TO PREVENT EROSION.

TYPE "BELOW GRADE"

CONCRETE WASHOUT

NOT TO SCALE

WithersRavenel
Engineers | Planners
137 S Wilmington Street | Suite 200 | Raleigh, NC 27601 | t: 919.469.3340 | license # F-1479
www.withersravenel.com

PROJECT # SP 22-02
ROLESVILLE PUBLIC WORKS FACILITY
ROLESVILLE, NORTH CAROLINA

EROSION CONTROL DETAILS

Job No. 02210710.00	
Date 7/1/2022	Drawn By DBG
Checked By PED	Designer PED/DBG

NORTH CAROLINA PROFESSIONAL SEAL 049219 ENGINEER PAUL DEVLIN
7/1/2022

Revisions

Sheet No.
C5.03

CONSTRUCTION SEQUENCE

1. ALL LAND DISTURBING ACTIVITIES SHALL BE CONDUCTED IN ACCORDANCE WITH SEDIMENTATION AND EROSION CONTROL STANDARDS AND PRACTICES PRESCRIBED BY NCDEQ.
2. NOTIFY NCDEQ AT 919-791-4200 OF CONSTRUCTION COMMENCEMENT AND SCHEDULE PRE-CONSTRUCTION CONFERENCE IF REQUIRED BY STORMWATER MANAGER.
3. EROSION AND SEDIMENT CONTROL (E&SC) PERMIT AND A CERTIFICATE OF COVERAGE (COC) MUST BE OBTAINED BEFORE ANY LAND DISTURBING ACTIVITIES (INCLUDING TIMBERING AND DEMOLITION) OCCUR.
4. FLAG PROPERTY LINES, EASEMENTS, BUFFERS, AND TREE PROTECTION AREAS.
5. INSTALL CONSTRUCTION ENTRANCE, TREE PROTECTION FENCE, SILT FENCE, AND SILT FENCE OUTLETS PRIOR TO ANY LAND DISTURBING ACTIVITIES (INCLUDING ANY TREE CLEARING OR DEMOLITION). CLEAR ONLY AS NECESSARY TO INSTALL THESE DEVICES AS SPECIFIED ON THE APPROVED PLAN SHEET. INSTALL ALL OTHER EROSION CONTROL MEASURES AS REQUIRED BY NCDENR INCLUDING SEDIMENT BASINS, BARRIERS, AND DIVERSION DITCHES AS NEEDED. CLEAR ONLY AS NECESSARY TO INSTALL THESE DEVICES. INSTALL DITCH LINERS AND TEMPORARY CULVERT PIPE AS NOTED ON PLANS. SEED TEMPORARY DIVERSIONS, BERMS, AND BASINS IMMEDIATELY AFTER INSTALLATION. INSTALL COIR WATTLES OR CHECK DAMS IN TEMPORARY DIVERSIONS.
6. BEGIN LIMITED CLEARING AND GRUBBING ACTIVES AS DIRECTED BY THE OWNER AND ROUGH GRADE SITE.
7. STOCKPILE TOPSOIL AND SUITABLE FILL MATERIAL. INSTALL SILT FENCE AROUND STOCKPILE AREAS. DISPOSE OF UNSUITABLE SOILS AND ALL OTHER WASTE MATERIALS OFF-SITE IN A LEGAL MANNER. THE CONTRACTOR WILL BE RESPONSIBLE FOR LOCATIONS OF ALL STOCKPILES AND ALL ADDITIONAL SEDIMENT AND EROSION CONTROLS MEASURERS REQUIRED.
8. INSTALL STORM SEWER, IF SHOWN, AND PROTECT INLETS WITH BLOCK AND GRAVEL INLET CONTROLS, SEDIMENT TRAPS OR OTHER APPROVED MEASURES AS SHOWN ON THE PLAN. BEGIN CONSTRUCTION, BUILDING, ETC.
9. ONCE STORM SEWER IS INSTALLED AND INLETS ARE PROTECTED, REMOVE/REVISE TEMPORARY DIVERSIONS AS SHOWN ON THE PLANS.
10. STABILIZE SITE AS AREAS ARE BROUGHT UP TO FINISH GRADE WITH VEGETATION, PAVING, DITCH LININGS, ETC. SEED AND MULCH DENUDED AREAS PER GROUND STABILIZATION TIME FRAMES.
11. GROUNDCOVER SHALL BE PROVIDED IN ACCORDANCE TO THE GROUND STABILIZATION CHART.
12. SELF-INSPECTIONS FOR EROSION AND SEDIMENTATION CONTROL MEASURES ARE TO BE PERFORMED AT LEAST ONCE EVERY SEVEN CALENDAR DAYS AND WITHIN 24 HOURS OF EVERY RAIN EVENT OF GREATER THAN 1 INCH. ANY NEEDED REPAIRS SHALL BE MADE IMMEDIATELY TO MAINTAIN MEASURES AS DESIGNED. ALL ESC MEASURES SHALL BE MAINTAINED AS SPECIFIED IN THE CONSTRUCTION DETAILS ON THIS PLAN. A RAIN GAUGE SHALL BE INSTALLED AT THE PROJECT SITE FOR MONITORING.
13. MAINTENANCE TO CONSIST OF REMOVE SEDIMENT FROM CHECK DAMS AND FROM BEHIND SILT FENCES, MAKE NECESSARY REPAIRS AS DIRECTED BY INSPECTOR, OWNER, OR ENGINEER.
14. THE CONTRACTOR SHALL FAITHFULLY MAINTAIN ALL EROSION AND SEDIMENTATION CONTROL MEASURES AND TAKE ALL PRECAUTIONARY MEASURES NECESSARY TO ENSURE THAT NO SILT LEAVES THE PROJECT SITE AND ENTERS ANY NATURAL STREAM OR WATERWAY AND MAINTAIN EROSION AND SEDIMENTATION CONTROL MEASURES UNTIL PERMANENT GROUND COVER IS ESTABLISHED.
15. THE CONTRACTOR SHALL CONDUCT SELF-INSPECTIONS OF THE EROSION AND SEDIMENTATION CONTROL MEASURES AND COMPETE THE FOLLOWING COMBINED SELF-INSPECTION FORM FOUND ON THE DEMLR WEBSITE (HTTPS://DEQ.NC.GOV/ABOUT/DIVISIONS/ENERGY-MINERAL-LAND-RESOURCES/EROSION-SEDIMENT-CONTROL/FORMS.) TWELVE MONTHS OF COMPLETE INSPECTION FORMS SHALL BE KEPT ON-SITE AND AVAILABLE FOR INSPECTION AT ALL TIMES. IT IS RECOMMENDED A COPY BE KEPT IN A PERMITS BOX.
16. ALL EXISTING VEGETATION NOT SCHEDULED FOR REMOVAL SHALL BE PROTECTED VIA TREE PROTECTION FENCING. LOCATE FENCING AS FAR AS PRACTICABLE FROM THE VEGETATION THE FENCE IS TO PROTECT.
17. STABILIZE SITE AS AREAS ARE BROUGHT TO FINISHED GRADE WITH VEGETATION OR STONE BASE. ALL AREAS INDICATED TO BE PAVED SHALL BE STABILIZED WITH STONE AS SOON AS THEY ARE BROUGHT TO FINAL GRADE. MAINTAIN DIVERSIONS, INLET PROTECTION AND SEDIMENT BASINS UNTIL SITE IS COMPLETELY STABILIZED.
18. SLOPES SHALL BE NO STEEPER THAN 2:1 FOR VEGETATIVE COVER.
19. SEED, FERTILIZE, AND MULCH ALL DISTURBED AREAS, INCLUDING ALL STORAGE, STAGING, AND OFF SITE STAGING, IN ACCORDANCE WITH THE REQUIREMENTS SET FORTH ON THE PLANS.
20. PERIMETER MEASURES MUST BE LEFT IN PLACE UNTIL ALL UPLAND AREAS ARE PERMANENTLY STABILIZED. AFTER SITE IS PERMANENTLY STABILIZED, REMOVE ALL TEMPORARY EROSION CONTROL MEASURES AND PROVIDE PERMANENT SEEDING WHERE TEMPORARY MEASURES HAVE BEEN REMOVED AND GROUND COVER IS NOT ADEQUATE. SEDIMENT BASINS MAY NOT BE REMOVED OR CONVERTED TO PERMANENT SCMS UNTIL ALL UPLAND AREAS ARE PERMANENTLY STABILIZED. NC DEQ SHOULD BE NOTIFIED 10-DAYS PRIOR TO REMOVAL OF A BASIN.
21. WHEN CONSTRUCTION IS COMPLETE AND ALL AREAS ARE STABILIZED, CALL NCDEQ @ 919-791-4200 FOR AN INSPECTION BY AN ENVIRONMENTAL INSPECTOR.
22. IF SITE IS APPROVED, REMOVE ANY TEMPORARY DIVERSIONS, SILT FENCES, SEDIMENT TRAPS, ETC., AND REGRADE AND SEED OR STABILIZE ANY RESULTING DISTURBED AREAS.
23. WHEN VEGETATION HAS BECOME ESTABLISHED, CALL NCDEQ @ 919-791-4200 FOR A FINAL SITE INSPECTION.
24. THE CONTRACTOR SHALL BE RESPONSIBLE FOR INSTALLING AND MAINTAINING ALL TEMPORARY EROSION AND SEDIMENTATION CONTROL DEVICES SHOWN ON THE DRAWINGS. UTILIZE SILT BAG FOR DECOMISSIONING OF PROPOSED SKIMMER SEDIMENT BASIN. SEE DETAIL SHEET C5.03. THE SILT BAG SHALL BE CONTINUOUSLY MONITORED DURING OPERATION.
25. THE CONTRACTOR SHALL PROVIDE ADDITIONAL SILT FENCING AROUND SPOIL PILES AT BORING PITS IF PIT IS LEFT OPEN OVERNIGHT OR IF A RAIN EVEN IS EMINENT. PLASTIC SHEETING MAY ALSO BE USED TO COVER PILES.
26. WHEN THE PROJECT IS COMPLETE, THE PERMITTEE SHALL CONTACT DEMLR TO CLOSE OUT THE E&SC PLAN.

NARRATIVE:

1. PROJECT DESCRIPTION

   ROLESVILLE PUBLIC WORKS FACILITY IS LOCATED ON THE NORTHWEST CORNER OF LOUISBURG ROAD (HIGHWAY 401) AND EAST YOUNG STREET. THE PURPOSE OF THIS PROJECT IS TO PROVIDE CLEARING, GRUBBING, INSTALLATION OF EROSION CONTROL DEVICES, GRADING, AND INSTALLATION OF UTILITIES AS REQUIRED FOR THE AFOREMENTIONED DEVELOPMENT.

2. PERMANENT STABILIZATION

   ALL AREAS DISTURBED BY CONSTRUCTION WILL BE STABILIZED WITH PERMANENT SEEDING IMMEDIATELY FOLLOWING FINISH GRADING. SEEDING WILL CONSIST OF GRASSES TYPICAL OF THE AREA AND INSPECTION AND MAINTENANCE PERFORMED TO CONFIRM ESTABLISHMENT.

3. PLANNED EROSION AND SEDIMENTATION CONTROL PRACTICES

   A. STOCKPILES

   STOCKPILES WILL BE USED WHEN THE STORAGE OF EXCESS FILL MATERIAL IS NECESSARY. THE CONTRACTOR WILL BE RESPONSIBLE FOR LOCATIONS OF ALL STOCKPILES AND ALL ADDITIONAL SEDIMENT AND EROSION CONTROLS MEASURERS REQUIRED. STOCKPILES SHOULD BE STABILIZED AND/OR SURROUNDED WITH SEDIMENT FENCE TO PREVENT RUNOFF.

   B. CONSTRUCTION ENTRANCES

   CONSTRUCTION ENTRANCES WILL BE PROVIDED TO REDUCE EROSION OF SEDIMENT INTO WETLANDS AND WATERWAYS CAUSED BY HEAVY TRUCKS AND MACHINERY ENTERING AND LEAVING THE PROJECT SITE. THIS PRACTICE ALSO PLAYS AN IMPORTANT ROLE IN COMMUNITY PERCEPTION OF THE PROJECT BY MINIMIZING THE DIRT AND MUD THAT IS TRACKED ONTO STREETS.

   C. SILT FENCE

   SEDIMENT FENCE WILL BE CONSTRUCTED AS NECESSARY TO PREVENT SEDIMENT FROM ENTERING DITCHES AND ADJACENT WATERWAYS.

   D. SILT FENCE OUTLETS/STONE DRAINS

   SILT FENCE OUTLETS SHALL BE INSTALLED ALONG THE SILT FENCE AT LOCATIONS WERE SIGNS OF CONCENTRATED FLOW OCCUR AND WILL BE FIELD ADJUSTED AS REQUIRED. THE STONE DRAINS ARE USED TO LET WATER TRAPPED BEHIND THE SILT FENCE TO ESCAPE DOWNSTREAM HELPINS TO PREVENT THE WEIGHT OF DETAINED WATER FROM COLLAPSING THE SILT FENCE AND ALLOWING TRAPPED SEDIMENT TO ENTER ADJACENT PROPERTY, WETLANDS, AND WATERWAYS.

   E. EROSION CONTROL MATTING

   EROSION CONTROL MATTING SHALL BE USED ON DISTURBED DITCHES AND SWALES. MATTING IS INTENDED TO STABILIZE SOIL ON DISTURBED SLOPES WHILE HOLDING SEED AND MULCH IN PLACE ALLOWING VEGETATION TO BECOME ESTABLISHED. DEPENDING UPON THE SLOPE AND DEPTH OF ANTICIPATED RUNOFF, DIFFERENT MATTING TYPES MAY BE NECESSARY FOR DIFFERENT APPLICATIONS.

   F. EROSION CONTROL STONE

   EROSION CONTROL STONE SHALL BE USED ON DISTURBED CREEK AND STREAM CROSSINGS. EROSION CONTROL STONE IS INTENDED TO STABILIZE SIDES AND BOTTOMS ON DISTURBED CREEK AND STREAM CROSSINGS WHILE ALLOWING VEGETATION TO BECOME ESTABLISHED. DEPENDING UPON THE SLOPE AND DEPTH OF ANTICIPATED RUNOFF, DIFFERENT GRADES OF EROSION CONTROL STONE MAY BE NECESSARY FOR DIFFERENT APPLICATIONS.

   G. SEEDING, FERTILIZING, AND MULCHING

   SEEDING, FERTILIZING, AND MULCHING ARE A PERMANENT FORM OF EROSION CONTROL. GROUNDCOVER SHALL BE PROVIDED WITHIN 14 CALENDAR DAYS FOLLOWING COMPLETION OF ANY PHASE OF GRADING. PERMANENT GROUNDCOVER SHALL BE PROVIDED FOR ALL DISTURBED AREAS WITHIN 14 CALENDAR DAYS FOLLOWING COMPLETION OF CONSTRUCTION ACTIVITIES.

EROSION CONTROL NOTES:

1. RECEIVING WATERSHED: NEUSE RIVER BASIN
2. TOTAL LIMITS OF CONSTRUCTION/LIMITS OF DISTURBANCE = ±4.9 ACRES.
3. ANY AREA DISTURBANCES BY CONTRACTOR NOT SHOWN ON THE CONSTRUCTION DRAWINGS ARE TO BE PERMITTED THROUGH THE APPROPRIATE PERMITTING AGENCY.
4. PURSUANT TO G.S. 113A-57(2), THE ANGLE FOR GRADED SLOPES AND FILLS SHALL BE NO GREATER THAN THE ANGLE THAT CAN BE RETAINED BY VEGETATIVE COVER OR OTHER ADEQUATE EROSION CONTROL DEVICE OR STRUCTURE.
5. PROVIDE A ROLLED EROSION CONTROL PRODUCT (RECP) TO STABILIZE DISTURBED DITCHES IF ANY SIGNS OF SCOURING ARE EVIDENT EVEN IF NO RECP HAS BEEN SHOWN ON THE CONSTRUCTION DRAWINGS.
6. NO STOCK OR WASTE PILES ARE ALLOWED WITHIN 50' OF STREAMS OR DRAINAGE STRUCTURES.
7. WHERE DEWATERING OF TRENCHES, PITS, AND OTHER EXCAVATIONS BECOMES NECESSARY THE DISCHARGE MUST BE DIVERTED TO A SEDIMENT FILTER BAG BEFORE BEING DISCHARGED TO THE GROUND.
8. ADEQUATE EROSION CONTROL MEASURES MUST BE INSTALLED, MAINTAINED, AND ADJUSTED AS NEEDED DURING THE DEMOLITION OR CLEARING AND GRUBBING PHASES AS WELL AS THROUGHOUT THE LIFE OF THE PROJECT AND UNTIL PERMANENT VEGETATION IS ESTABLISHED.

SEED BED PREPARATION:

1. CHISEL COMPACTED AREAS AND SPREAD TOPSOIL 3 INCHES DEEP OVER ADVERSE SOIL CONDITIONS, WITH STOCKPILED TOPSOIL. CONTRACTOR SHALL RESERVE SUFFICIENT TOPSOIL FOR SEEDBED PREPARATION.
2. RIP THE ENTIRE AREA TO 6 INCH DEPTH.
3. REMOVE ALL LOOSE ROCK, ROOTS, AND OTHER OBSTRUCTIONS LEAVING SURFACE REASONABLY SMOOTH AND UNIFORM.
4. APPLY AGRICULTURAL LIME, FERTILIZER, AND SUPER-PHOSPHATE UNIFORMLY AND MIX WITH SOIL (SEE BELOW*).
5. CONTINUE TILLAGE UNTIL A WELL-PULVERIZED, FIRM, REASONABLY UNIFORM SEEDBED IS PREPARED 4 TO 6 INCHES DEEP.
6. SEED ON A FRESHLY PREPARED SEEDBED AND COVER SEED LIGHTLY WITH SEEDING EQUIPMENT OR CULTIPACK AFTER SEEDING.
7. MULCH IMMEDIATELY AFTER SEEDING AND ANCHOR MULCH.
8. INSPECT ALL SEEDED AREAS AND MAKE NECESSARY REPAIRS OR RESEEDINGS WITHIN THE PLANTING SEASON, IF POSSIBLE. IF STAND IS LESS THAN 60% ESTABLISHED, THE ENTIRE AREA SHALL BE RESEEDED ACCORDING TO SPECIFICATIONS USING THE ORIGINAL LIME, FERTILIZER AND SEEDING RATES.
9. CONSULT A CONSERVATION INSPECTOR ON MAINTENANCE TREATMENT AND FERTILIZATION AFTER PERMANENT COVER IS ESTABLISHED.

*APPLY: AGRICULTURAL LIMESTONE - 2 TONS/ACRE (3 TONS/ACRE IN CLAY SOILS) FERTILIZER - 1,000 LB/ACRE - 10-10-10

SUPER-PHOSPHATE - 500 LB/ACRE - 20% ANALYSIS MULCH - 2 TONS/ACRE - SMALL GRAIN STRAW

ANCHOR - ASPHALT EMULSION @ 300 GALS/ACRE

SEEDING AND MULCHING:

SEEDING AND MULCHING SHALL BE CARRIED OUT IMMEDIATELY BEHIND CONSTRUCTION IN ACCORDANCE WITH THE FOLLOWING SPECIFICATIONS:

SHOULDERS, SIDE DITCHES, SLOPES (3:1 MAX.)

DATE	TYPE	PLANTING/ACRE
AUG 15 - NOV 1	TALL FESCUE	300 LBS
NOV 1 - MAR 1	TALL FESCUE & ABRUZZI RYE	300 LBS.
MAR 1 - APR 15	TALL FESCUE	300 LBS.
APR 15 - JUNE 30	HULLED COMMON BERMUDA GRASS	25 LBS.
JULY 15 - AUG 15	TALL FESCUE AND	35 LBS .
	*** BROWN TOP MILLET OR	
	*** SORGHUM-SUDAN HYBRIDS	

SLOPES (3:1 TO 2:1)

DATE	TYPE	PLANTING/ACRE
MAR 1 - JUNE 1	SERICEA LESPEDEZA (SCARIFIED) AND	50 LBS.
MAR 1 - APRIL 15	ADD TALL FESCUE AND	120 LBS.
MAR 1 - JUNE 30	ADD HULLED COMMON BERMUDA GRASS	25 LBS.
JUNE 1 - SEP 1	*** TALL FESCUE AND	120 LBS.
	*** BROWN TOP MILLET OR	35 LBS.
	*** SORGHUM-SUDAN HYBRIDS	30 LBS.
SEP 1 - MAR 1	SERICEA LESPEDEZA (UNHULLED-UNSCARIFIED)AND	70 LBS.
	TALL FESCUE	120 LBS.
NOV 1 - MAR 1	ADD ABRUZZI RYE	25 LBS.

***TEMPORARY - RESEED ACCORDING TO OPTIMUM SEASON FOR DESIRED PERMANENT VEGETATION. DO NOT ALLOW TEMPORARY COVER TO GROW OVER 12 INCHES IN HEIGHT BEFORE MOWING, OTHERWISE FESCUE MAY BE SHADED OUT.

A CONSERVATION ENGINEER OR SOIL CONSERVATION SERVICE SHALL BE CONSULTED FOR ADDITIONAL INFORMATION CONCERNING OTHER ALTERNATIVES FOR VEGETATION OF DENUDED AREAS. THE ABOVE VEGETATION RATES ARE THOSE WHICH DO WELL UNDER LOCAL CONDITIONS; OTHER SEEDING RATE COMBINATIONS ARE POSSIBLE. ANY VARIATION FROM THIS LIST SHALL BE PRE-APPROVED BY THE TOWN.

EROSION CONTROL SELF INSPECTION:

NOTIFICATION OF LAND RESOURCES SEDIMENT AND EROSION CONTROL SELF-INSPECTION PROGRAM:

THE SEDIMENTATION POLLUTION CONTROL ACT WAS AMENDED IN 2006 TO REQUIRE THAT PERSONS RESPONSIBLE FOR LAND-DISTURBING ACTIVITIES INSPECT A PROJECT AFTER EACH PHASE OF THE PROJECT TO MAKE SURE THAT THE APPROVED EROSION AND SEDIMENTATION CONTROL PLAN IS BEING FOLLOWED. RULES DETAILING THE DOCUMENTATION OF THESE INSPECTIONS TOOK EFFECT OCTOBER 1, 2010. THE SELF-INSPECTION PROGRAM IS SEPARATE FROM THE WEEKLY SELF-MONITORING PROGRAM OF THE NPDES STORMWATER PERMIT FOR CONSTRUCTION ACTIVITIES. THE FOCUS OF THE SELF-INSPECTION REPORT IS THE INSTALLATION AND MAINTENANCE OF EROSION AND SEDIMENTATION CONTROL MEASURES ACCORDING TO THE APPROVED PLAN. THE INSPECTIONS MUST BE CONDUCTED AFTER EACH PHASE OF THE PROJECT, AND CONTINUED UNTIL PERMANENT GROUND COVER IS ESTABLISHED IN ACCORDANCE WITH NCGS 113A-54.1 AND 15A NCAC 4B.0131. THE SELF-INSPECTION REPORT FORM IS AVAILABLE AS AN EXCEL SPREADSHEET FROM HTTP://WWW.DLR.ENR.STATE.NC.US/PAGES/SEDIMENTATION_NEW.HTML. IF YOU HAVE QUESTIONS OR CANNOT ACCESS THE FORM, PLEASE CONTACT THIS OFFICE AT (919) 791-4200.

GROUND STABILIZATION CHART

SITE AREA DESCRIPTION	STABILIZATION	TIMEFRAME EXCEPTIONS
DIKES, SWALES, DITCHES, AND SLOPES	7 DAYS	NONE
HIGH QUALITY WATER (HQW) ZONES	7 DAYS	NONE
SLOPES STEEPER THAN 3:1	7 DAYS	IF SLOPES ARE 10' OR LESS IN LENGTH AND ARE NOT STEEPER THAN 2:1, 14 DAYS ARE ALLOWED.
SLOPES 3:1 OR FLATTER	14 DAYS	7 DAYS FOR SLOPES GREATER THAN 50' IN LENGTH.
ALL OTHER AREAS WITH SLOPES FLATTER THAN 4:1	14 DAYS	NONE, EXCEPT FOR PERIMETERS AND HQW ZONES.

NOTES:

1. USE 2"-3" WASHED STONE, PAD TO BE 100'L X 15'W X 8"D AT A MINIMUM.
2. TURNING RADIUS SUFFICIENT TO ACCOMMODATE LARGE TRUCKS IS TO BE PROVIDED.
3. ENTRANCE SHOULD BE LOCATED TO PROVIDE FOR MAXIMUM UTILITY BY ALL CONSTRUCTION VEHICLES.
4. APPLICABLE AT ALL POINTS OF INGRESS EGRESS UNTIL SITE IS STABILIZED. FREQUENT CHECKS OF THE DEVICE & TIMELY MAINTENANCE MUST BE PROVIDED.
5. WHEN TEMPORARY CONSTRUCTION ENTRANCES ARE LOCATED ON PAVED SURFACES, PLACE MINIMUM OF 2" OF SCREENINGS OR SAND TO HELP FACILITATE IN CLEAN-UP & SITE RESTORATION.

MAINTENANCE NOTES:

1. MAINTAIN THE GRAVEL PAD IN A CONDITION TO PREVENT MUD OR SEDIMENT FROM LEAVING THE CONSTRUCTION SITE. THIS MAY REQUIRE PERIODIC TOPDRESSING WITH 2-INCH STONE.
2. AFTER EACH RAINFALL, INSPECT ANY STRUCTURE USED TO TRAP SEDIMENT AND CLEAN IT OUT AS NECESSARY.
3. IMMEDIATELY REMOVE ALL OBJECTIONABLE MATERIALS SPILLED, WASHED, OR TRACKED ONTO PUBLIC ROADWAYS.

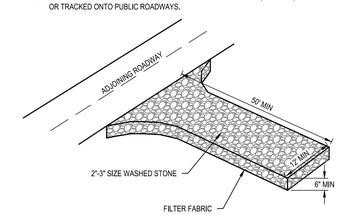

CONSTRUCTION ENTRANCE

NOT TO SCALE

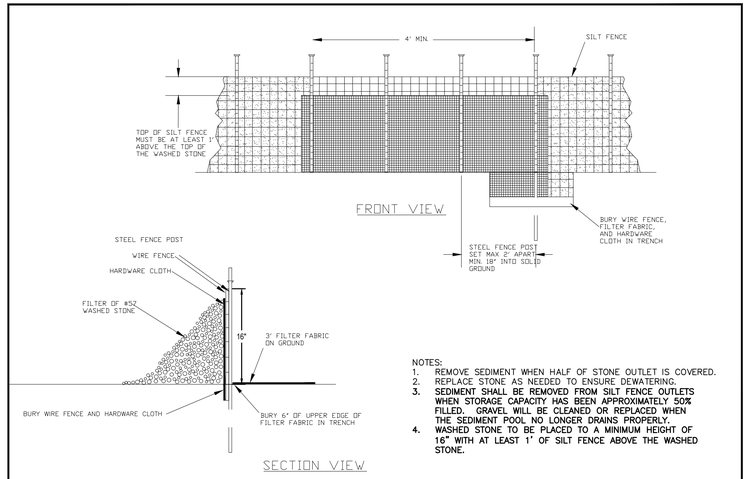

NOTES:
1. REMOVE SEDIMENT WHEN HALF OF STONE OUTLET IS COVERED.
2. REPLACE STONE AS NEEDED TO ENSURE DEWATERING.
3. SEDIMENT SHALL BE REMOVED FROM SILT FENCE OUTLETS WHEN STORAGE CAPACITY HAS BEEN APPROXIMATELY 50% FILLED. GRAVEL WILL BE CLEANED OR REPLACED WHEN THE SEDIMENT POOL NO LONGER DRAINS PROPERLY.
4. WASHED STONE TO BE PLACED TO A MINIMUM HEIGHT OF 16" WITH AT LEAST 1' OF SILT FENCE ABOVE THE WASHED STONE.

STANDARD SILT FENCE OUTLET

TEMPORARY SKIMMER BASIN AND ORIFICE DESIGN SUMMARY

BASIN	TYPE	DRAINAGE AREA	DENUDED AREA	C VALUE	PEAK FLOW	DEPTH	LENGTH	WIDTH	WEIR LENGTH	VOLUME REQUIRED	VOLUME PROVIDED	SURFACE AREA REQ.	SURFACE PROVIDED	SKIMMER SIZE	ORIFICE SIZE
		(AC)	(AC)		(CFS)	(FT)	(FT)	(FT)	(FT)	(CF)	(CF)	(SF)	(SF)	(IN)	(IN)
SSB #1	SKIMMER	3.60	2.54	0.40	10.38	2.0	SEE EC PLANS		12	4,572	6,177	3,374	3,569	2	1.5

NOTES: 1' OF FREEBOARD PROVIDED
SURFACE AREA REQUIREMENT FOR SKIMMER SEDIMENT BASIN = 325 SF/CFS
VOLUME REQUIREMENT FOR SKIMMER SEDIMENT BASIN & SEDIMENT BASIN = 1,800 CF/AC DRAINAGE AREA
RAINFALL INTENSITY = 7.19 IN/HR

SKIMMER SIZING

ORIFICE EQUATION	Cd = 0.60
Q =Cd*A*(2gh)^(1/2)	g = 32.2ft/s2
VOLUME PROVIDED =	6,177.00 CF
DRAWDOWN TIME =	3 days
SKIMMER SIZE =	2.0 IN
HEAD =	0.167 FT
ORIFICE AREA =	0.012 SF
	1.746 sq. in
MIN ORIFICE DIAMETER =	1.49 IN
ORIFICE DIAMETER USED =	1.50 IN
ACTUAL DRAWDOWN TIME =	2.91 days

WithersRavenel
Engineers | Planners
137 S Wilmington Street | Suite 200 | Raleigh, NC 27601 | t: 919.469.3340 | license # F-1479
www.withersravenel.com

PROJECT # SP 22-02

ROLESVILLE PUBLIC WORKS FACILITY

ROLESVILLE, NORTH CAROLINA

EROSION CONTROL DETAILS

Job No. 02210710.00	
Date 7/1/2022	Drawn By DBG
Checked By PED	Designer PED/DBG

NORTH CAROLINA PROFESSIONAL SEAL 049219 ENGINEER PAUL EDWIN DEVLIN 7/1/2022

Revisions

Sheet No. C5.04

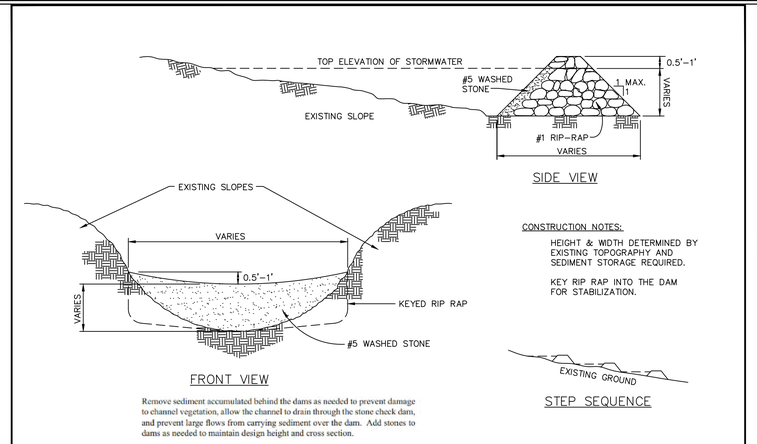

CONSTRUCTION NOTES:

HEIGHT & WIDTH DETERMINED BY EXISTING TOPOGRAPHY AND SEDIMENT STORAGE REQUIRED.

KEY RIP RAP INTO THE DAM FOR STABILIZATION.

Remove sediment accumulated behind the dams as needed to prevent damage to channel vegetation, allow the channel to drain through the stone check dam, and prevent large flows from carrying sediment over the dam. Add stones to dams as needed to maintain design height and cross section.

Inspect check dams and channels at least weekly and after each significant (1/2 inch or greater) rainfall event and repair immediately. Clean out sediment, straw, limbs, or other debris that could clog the channel when needed.

Anticipate submergence and deposition above the check dam and erosion from high flows around the edges of the dam. Correct all damage immediately. If significant erosion occurs between dams, additional measures can be taken such as, installing a protective riprap liner in that portion of the channel

STANDARD CHECK DAM

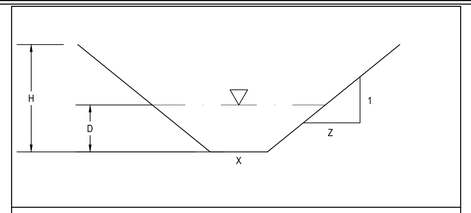

TRAPEZOIDAL DITCH CROSS SECTION TYPICAL DETAIL

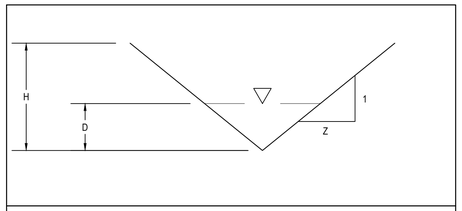

V- DITCH CROSS SECTION TYPICAL DETAIL

NOTES:

1. TEMPORARY DIVERSION DITCH TO BE USED TO INTERCEPT FLOW AND/OR DIVERT TO A SEDIMENT CONTROL MEASURE OR BMP.
2. SILT SHALL BE REMOVED WHEN DITCH IS ONE-HALF FULL.
3. DITCH SHALL BE RECONSTRUCTED WHEN DAMAGED BY EQUIPMENT OR COVERED BY FILL.
4. STABILIZE DIVERSION DITCH BERM WITH TEMPORARY SEEDING, MULCH WITH TAC, AND/OR EROSION CONTROL NETTING.

MAINTENANCE NOTE:

INSPECT TEMPORARY DIVERSIONS ONCE A WEEK AND AFTER EVERY RAINFALL. IMMEDIATELY REMOVE SEDIMENT FROM THE FLOW AREA AND REPAIR THE DIVERSION RIDGE. CAREFULLY CHECK OUTLETS AND MAKE TIMELY REPAIRS AS NEEDED. WHEN THE AREA PROTECTED IS PERMANENTLY STABILIZED, REMOVE THE RIDGE AND THE CHANNEL TO BLEND WITH THE NATURAL GROUND LEVEL AND APPROPRIATELY STABILIZE IT.

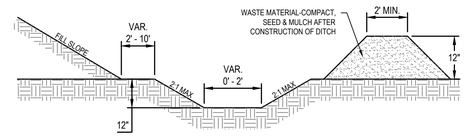

TEMPORARY DIVERSION OR CLEAN WATER DIVERSION

NOT TO SCALE

CHANNEL DESIGN INFORMATION

Channel I. D.	Drainage Area (ac)	Weighted 'c' Coefficient	Channel Flow (cfs)	Channel Slope (%)	Channel Flow Depth (ft)	Channel Minimum Depth (ft)	Channel Bottom Width (ft)	Channel Side Slopes	Channel Velocity (fps)	Channel Shear Stress (psf)	Ditch Lining
TD 1	2.56	0.88	12.72	1.00	1.26	1.76	2.00	2 :1	2.23	0.79	NAG S75BN or equal
TD 2	0.57	0.60	1.92	1.00	0.49	0.99	2.00	2 :1	1.33	0.30	None required
CWD 1	1.45	0.33	2.69	2.80	0.44	0.94	2.00	2 :1	2.12	0.77	NAG S75BN or equal
CWD 2	0.57	0.30	0.96	1.20	0.32	0.82	2.00	2 :1	1.15	0.24	None required
A-A'	2.55	0.43	6.16	5.70	0.54	1.04	0.50	2 :1	7.14	1.93	NAG SC150BN or equal
B-B'	3.39	0.49	9.34	1.00	1.27	1.77	0.00	3 :1	1.93	0.79	None required
C-C'	0.43	0.48	1.16	5.50	0.42	0.92	0.00	3 :1	2.17	1.45	NAG S75BN or equal
D-D'	0.38	0.47	1.00	1.30	0.52	1.02	0.00	3 :1	1.22	0.43	None required
E-E'	2.11	0.43	5.10	0.80	0.61	1.11	4.00	3 :1	1.43	0.31	None required
F-F'	0.97	0.57	3.11	1.00	0.84	1.34	0.00	3 :1	1.46	0.52	None required
G-G'	1.41	0.65	5.15	1.00	0.58	1.08	4.00	3 :1	1.55	0.36	None required

ROLLMAX™ ROLLED EROSION CONTROL

Specification Sheet – BioNet® SC150BN™ Erosion Control Blanket

DESCRIPTION

The extended-term double net erosion control blanket shall be a machine-produced mat of 70% agricultural straw and 30% coconut fiber with a functional longevity of up to 18 months. (NOTE: functional longevity may vary depending upon climatic conditions, soil, geographical location, and elevation). The blanket shall be of consistent thickness with the straw and coconut evenly distributed over the entire area of the mat. The blanket shall be covered on the top and bottom sides with a 100% biodegradable woven natural organic fiber netting. The netting shall consist of machine directional strands formed from two intertwined yarns with cross directional strands interwoven through the twisted machine strands (commonly referred to as Leno weave) to form an approximate 0.50 x 1.0 in. (1.27 x 2.54 cm) mesh. The blanket shall be sewn together on 1.50 inch (3.81 cm) centers with degradable thread. The blanket shall be manufactured with a colored thread stitched along both outer edges (approximately 2-5 inches [5-12.5 cm] from the edge) as an overlap guide for adjacent mats.

The SC150BN shall meet Type 3.B specification requirements established by the Erosion Control Technology Council (ECTC) and Federal Highway Administration's (FHWA) FP-03 Section 713.17

Index Property	Test Method	Typical
Thickness	ASTM D6525	0.25 in. (6.35 mm)
Resiliency	ECTC Guidelines	86%
Water Absorbency	ASTM D1117	311%
Mass/Unit Area	ASTM D6475	8.32 oz/sy (282.9 g/sm)
Swell	ECTC Guidelines	46%
Smolder Resistance	ECTC Guidelines	Yes
Stiffness	ASTM D1388	0.42 oz-in
Light Penetration	ASTM D6567	7.6%
Tensile Strength - MD	ASTM D6818	201.6 lbs/ft (2.99 kN/m)
Elongation - MD	ASTM D6818	13.4%
Tensile Strength - TD	ASTM D6818	164.4 lbs/ft (2.44 kN/m)
Elongation - TD	ASTM D6818	14.2%
Biomass Improvement	ASTM D7322	641 %

Design Permissible Shear Stress	
Unvegetated Shear Stress	2.10 psf (100 Pa)
Unvegetated Velocity	8.00 fps (2.44 m/s)

Material Content		
Matrix	70% Straw Fiber	0.35 lbs/sq yd (0.19 kg/sm)
	30% Coconut Fiber	0.15 lbs/sq yd (0.08 kg/sm)
Netting	Top: Leno woven 100% biodegradable jute	9.35 lb/1000 sq ft (4.5 kg/100 sm)
	Bottom: 100% biodegradable organic jute	7.7 lb/1000 sq ft (3.76 kg/100 sm)
Thread	Biodegradable	

Slope Design Data: C Factors			
	Slope Gradients (S)		
Slope Length (L)	≤ 3:1	3:1 – 2:1	≥ 2:1
≤ 20 ft (6 m)	0.001	0.029	0.063
20-50 ft	0.051	0.055	0.092
≥ 50 ft (15.2 m)	0.10	0.080	0.120

Standard Roll Sizes			
Width	6.67 ft (2.03 m)	8.0 ft (2.4 m)	15.5 ft (4.72 m)
Length	108 ft (32.92 m)	112 ft (34.14 m)	90 ft (27.43 m)
Weight ± 10%	52.22 lbs (23.69 kg)	65.28 lbs (29.61 kg)	101.2 lbs (45.9 kg)
Area	80 sq yd (66.9 sm)	100 sq yd (83.61 sm)	155 sq yd (129.6 sm)
	Leno weave top only	Leno top and bottom	Leno top and bottom

Roughness Coefficients – Unveg.	
Flow Depth	Manning's n
≤ 0.50 ft (0.15 m)	0.050
0.50 – 2.0 ft	0.050–0.018
≥ 2.0 ft (0.60 m)	0.018

NORTH AMERICAN GREEN

North American Green
5401 St. Wendel-Cynthiana Road
Poseyville, Indiana 47633

nagreen.com
800-772-2040

EC_RMX_MPDS_BSC150BN_6.13

ROLLMAX™ ROLLED EROSION CONTROL

Specification Sheet – BioNet® S75BN™ Erosion Control Blanket

DESCRIPTION

The short-term single net erosion control blanket shall be a machine-produced mat of 100% agricultural straw with a functional longevity of up to 12 months. (NOTE: functional longevity may vary depending upon climatic conditions, soil, geographical location, and elevation). The blanket shall be of consistent thickness with the straw evenly distributed over the entire area of the mat. The blanket shall be covered on the top side with a 100% biodegradable woven natural organic fiber net. The netting shall consist of machine directional strands formed from two intertwined yarns with across directional strands interwoven through the twisted machine strands (commonly referred to as a Leno weave) to form approximate 0.50 x 1.0 in. (1.27 x 2.54 cm) mesh. The blanket shall be sewn together on 1.50 inch (3.81 cm) centers with degradable thread. The blanket shall be manufactured with a colored thread stitched along both outer edges (approximately 2-5 inches [5-12.5 cm] from the edge) as an overlap guide for adjacent mats.

The S75BN shall meet Type 2.C specification requirements established by the Erosion Control Technology Council (ECTC) and Federal Highway Administration's (FHWA) FP-03 Section 713.17

Index Property	Test Method	Typical
Thickness	ASTM D6525	0.29 in. (7.37 mm)
Resiliency	ECTC Guidelines	81.4%
Water Absorbency	ASTM D1117	440%
Mass/Unit Area	ASTM D6475	9.12 oz/sy (310 g/sm)
Swell	ECTC Guidelines	15.7%
Smolder Resistance	ECTC Guidelines	Yes
Stiffness	ASTM D1388	6.92 oz-in
Light Penetration	ASTM D6567	9.1%
Tensile Strength - MD	ASTM D6818	146.4 lbs/ft (2.17 kN/m)
Elongation - MD	ASTM D6818	10.9%
Tensile Strength - TD	ASTM D6818	109.2 lbs/ft (1.62 kN/m)
Elongation - TD	ASTM D6818	14.3%
Biomass Improvement	ASTM D7322	398%

Material Content		
Matrix	100% straw fiber	0.5 lbs/sq yd (0.27 kg/sm)
Netting	Top side only: Leno woven 100% biodegradable natural organic fiber	9.3 lbs/1000 sq ft (4.5 kg/100 sm)
Thread	Biodegradable	

Slope Design Data: C Factors			
	Slope Gradients (S)		
Slope Length (L)	≤ 3:1	3:1 – 2:1	≥ 2:1
≤ 20 ft (6 m)	0.029	N/A	N/A
20-50 ft	0.11	N/A	N/A
≥ 50 ft (15.2 m)	0.19	N/A	N/A

Standard Roll Size	
Width	6.67 ft (2.0 m)
Length	108 ft (32.92 m)
Weight ± 10%	46.4 lbs (21.05 kg)
Area	80 sq yd (66.9 sm)

Roughness Coefficients – Unveg.	
Flow Depth	Manning's n
≤ 0.50 ft (0.15 m)	0.055
0.50 – 2.0 ft	0.055–0.021
≥ 2.0 ft (0.60 m)	0.021

Design Permissible Shear Stress	
Unvegetated Shear Stress	1.60 psf (76 Pa)
Unvegetated Velocity	5.00 fps (1.52 m/s)

NORTH AMERICAN GREEN

North American Green
5401 St. Wendel-Cynthiana Road
Poseyville, Indiana 47633

nagreen.com
800-772-2040

EC_RMX_MPDS_BS75BN_6.13

WithersRavenel
Engineers | Planners
137 S Wilmington Street | Suite 200 | Raleigh, NC 27601 | t: 919.469.3340 | license # F-1479
www.withersravenel.com

PROJECT # SP 22-02

ROLESVILLE PUBLIC WORKS FACILITY

ROLESVILLE, NORTH CAROLINA

EROSION CONTROL DETAILS

Job No. 02210710.00	
Date 7/1/2022	Drawn By DBG
Checked By PED	Designer PED/DBG

NORTH CAROLINA PROFESSIONAL SEAL 049219 ENGINEER PAUL DEVLIN 7/1/2022

Revisions

Sheet No.
C5.05

NCGO1-DETAIL GROUND STABILIZATION AND HANDLING PLAN

EFFECTIVE: 04/01/19

GROUND STABILIZATION AND MATERIALS HANDLING PRACTICES FOR COMPLIANCE WITH THE NCG01 CONSTRUCTION GENERAL PERMIT

Implementing the details and specifications on this plan sheet will result in the construction activity being considered compliant with the Ground Stabilization and Materials Handling sections of the NCG01 Construction General Permit (Sections E and F, respectively). The permittee shall comply with the Erosion and Sediment Control plan approved by the delegated authority having jurisdiction. All details and specifications shown on this sheet may not apply depending on site conditions and the delegated authority having jurisdiction.

SECTION E: GROUND STABILIZATION

Required Ground Stabilization Timeframes		
Site Area Description	**Stabilize within this many calendar days after ceasing land disturbance**	**Timeframe variations**
(a) Perimeter dikes, swales, ditches, and perimeter slopes	7	None
(b) High Quality Water (HQW) Zones	7	None
(c) Slopes steeper than 3:1	7	If slopes are 10' or less in length and are not steeper than 2:1, 14 days are allowed
(d) Slopes 3:1 to 4:1	14	-7 days for slopes greater than 50' in length and with slopes steeper than 4:1 -7 days for perimeter dikes, swales, ditches, perimeter slopes and HQW Zones -10 days for Falls Lake Watershed
(e) Areas with slopes flatter than 4:1	14	-7 days for perimeter dikes, swales, ditches, perimeter slopes and HQW Zones -10 days for Falls Lake Watershed unless there is zero slope

Note: After the permanent cessation of construction activities, any areas with temporary ground stabilization shall be converted to permanent ground stabilization as soon as practicable but in no case longer than 90 calendar days after the last land disturbing activity. Temporary ground stabilization shall be maintained in a manner to render the surface stable against accelerated erosion until permanent ground stabilization is achieved.

GROUND STABILIZATION SPECIFICATION

Stabilize the ground sufficiently so that rain will not dislodge the soil. Use one of the techniques in the table below:

Temporary Stabilization	Permanent Stabilization
• Temporary grass seed covered with straw or other mulches and tackifiers • Hydroseeding • Rolled erosion control products with or without temporary grass seed • Appropriately applied straw or other mulch • Plastic sheeting	• Permanent grass seed covered with straw or other mulches and tackifiers • Geotextile fabrics such as permanent soil reinforcement matting • Hydroseeding • Shrubs or other permanent plantings covered with mulch • Uniform and evenly distributed ground cover sufficient to restrain erosion • Structural methods such as concrete, asphalt or retaining walls • Rolled erosion control products with grass seed

POLYACRYLAMIDES (PAMS) AND FLOCCULANTS

1. Select flocculants that are appropriate for the soils being exposed during construction, selecting from the *NC DWR List of Approved PAMS/Flocculants*.
2. Apply flocculants at or before the inlets to Erosion and Sediment Control Measures.
3. Apply flocculants at the concentrations specified in the *NC DWR List of Approved PAMS/Flocculants* and in accordance with the manufacturer's instructions.
4. Provide ponding area for containment of treated Stormwater before discharging offsite.
5. Store flocculants in leak-proof containers that are kept under storm-resistant cover or surrounded by secondary containment structures.

EQUIPMENT AND VEHICLE MAINTENANCE

1. Maintain vehicles and equipment to prevent discharge of fluids.
2. Provide drip pans under any stored equipment.
3. Identify leaks and repair as soon as feasible, or remove leaking equipment from the project.
4. Collect all spent fluids, store in separate containers and properly dispose as hazardous waste (recycle when possible).
5. Remove leaking vehicles and construction equipment from service until the problem has been corrected.
6. Bring used fuels, lubricants, coolants, hydraulic fluids and other petroleum products to a recycling or disposal center that handles these materials.

LITTER, BUILDING MATERIAL AND LAND CLEARING WASTE

1. Never bury or burn waste. Place litter and debris in approved waste containers.
2. Provide a sufficient number and size of waste containers (e.g dumpster, trash receptacle) on site to contain construction and domestic wastes.
3. Locate waste containers at least 50 feet away from storm drain inlets and surface waters unless no other alternatives are reasonably available.
4. Locate waste containers on areas that do not receive substantial amounts of runoff from upland areas and does not drain directly to a storm drain, stream or wetland.
5. Cover waste containers at the end of each workday and before storm events or provide secondary containment. Repair or replace damaged waste containers.
6. Anchor all lightweight items in waste containers during times of high winds.
7. Empty waste containers as needed to prevent overflow. Clean up immediately if containers overflow.
8. Dispose waste off-site at an approved disposal facility.
9. On business days, clean up and dispose of waste in designated waste containers.

PAINT AND OTHER LIQUID WASTE

1. Do not dump paint and other liquid waste into storm drains, streams or wetlands.
2. Locate paint washouts at least 50 feet away from storm drain inlets and surface waters unless no other alternatives are reasonably available.
3. Contain liquid wastes in a controlled area.
4. Containment must be labeled, sized and placed appropriately for the needs of site.
5. Prevent the discharge of soaps, solvents, detergents and other liquid wastes from construction sites.

PORTABLE TOILETS

1. Install portable toilets on level ground, at least 50 feet away from storm drains, streams or wetlands unless there is no alternative reasonably available. If 50 foot offset is not attainable, provide relocation of portable toilet behind silt fence or place on a gravel pad and surround with sand bags.
2. Provide staking or anchoring of portable toilets during periods of high winds or in high foot traffic areas.
3. Monitor portable toilets for leaking and properly dispose of any leaked material. Utilize a licensed sanitary waste hauler to remove leaking portable toilets and replace with properly operating unit.

EARTHEN STOCKPILE MANAGEMENT

1. Show stockpile locations on plans. Locate earthen-material stockpile areas at least 50 feet away from storm drain inlets, sediment basins, perimeter sediment controls and surface waters unless it can be shown no other alternatives are reasonably available.
2. Protect stockpile with silt fence installed along toe of slope with a minimum offset of five feet from the toe of stockpile.
3. Provide stable stone access point when feasible.
4. Stabilize stockpile within the timeframes provided on this sheet and in accordance with the approved plan and any additional requirements. Soil stabilization is defined as vegetative, physical or chemical coverage techniques that will restrain accelerated erosion on disturbed soils for temporary or permanent control needs.

CONCRETE WASHOUTS

1. Do not discharge concrete or cement slurry from the site.
2. Dispose of, or recycle settled, hardened concrete residue in accordance with local and state solid waste regulations and at an approved facility.
3. Manage washout from mortar mixers in accordance with the above item and in addition place the mixer and associated materials on impervious barrier and within lot perimeter silt fence.
4. Install temporary concrete washouts per local requirements, where applicable. If an alternate method or product is to be used, contact your approval authority for review and approval. If local standard details are not available, use one of the two types of temporary concrete washouts provided on this detail.
5. Do not use concrete washouts for dewatering or storing defective curb or sidewalk sections. Stormwater accumulated within the washout may not be pumped into or discharged to the storm drain system or receiving surface waters. Liquid waste must be pumped out and removed from project.
6. Locate washouts at least 50 feet from storm drain inlets and surface waters unless it can be shown that no other alternatives are reasonably available. At a minimum, install protection of storm drain inlet(s) closest to the washout which could receive spills or overflow.
7. Locate washouts in an easily accessible area, on level ground and install a stone entrance pad in front of the washout. Additional controls may be required by the approving authority.
8. Install at least one sign directing concrete trucks to the washout within the project limits. Post signage on the washout itself to identify this location.
9. Remove leavings from the washout when at approximately 75% capacity to limit overflow events. Replace the tarp, sand bags or other temporary structural components when no longer functional. When utilizing alternative or proprietary products, follow manufacturer's instructions.
10. At the completion of the concrete work, remove remaining leavings and dispose of in an approved disposal facility. Fill pit, if applicable, and stabilize any disturbance caused by removal of washout.

HERBICIDES, PESTICIDES AND RODENTICIDES

1. Store and apply herbicides, pesticides and rodenticides in accordance with label restrictions.
2. Store herbicides, pesticides and rodenticides in their original containers with the label, which lists directions for use, ingredients and first aid steps in case of accidental poisoning.
3. Do not store herbicides, pesticides and rodenticides in areas where flooding is possible or where they may spill or leak into wells, stormwater drains, ground water or surface water. If a spill occurs, clean area immediately.
4. Do not stockpile these materials onsite.

HAZARDOUS AND TOXIC WASTE

1. Create designated hazardous waste collection areas on-site.
2. Place hazardous waste containers under cover or in secondary containment.
3. Do not store hazardous chemicals, drums or bagged materials directly on the ground.

ONSITE CONCRETE WASHOUT
STRUCTURE WITH LINER

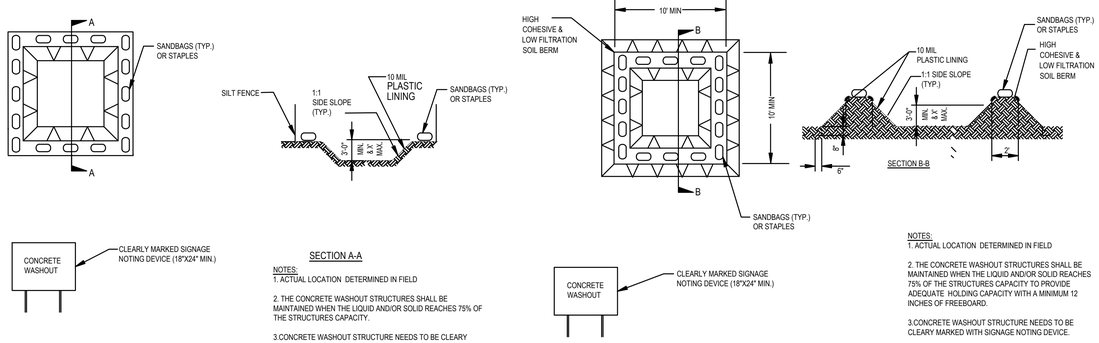

SECTION A-A

NOTES:
1.ACTUAL LOCATION DETERMINED IN FIELD

2. THE CONCRETE WASHOUT STRUCTURES SHALL BE MAINTAINED WHEN THE LIQUID AND/OR SOLID REACHES 75% OF THE STRUCTURES CAPACITY.

3.CONCRETE WASHOUT STRUCTURE NEEDS TO BE CLEARY MARKED WITH SIGNAGE NOTING DEVICE.

PLAN

BELOW GRADE WASHOUT STRUCTURE
NOT TO SCALE

NOTES:
1. ACTUAL LOCATION DETERMINED IN FIELD

2. THE CONCRETE WASHOUT STRUCTURES SHALL BE MAINTAINED WHEN THE LIQUID AND/OR SOLID REACHES 75% OF THE STRUCTURES CAPACITY TO PROVIDE ADEQUATE HOLDING CAPACITY WITH A MINIMUM 12 INCHES OF FREEBOARD.

3.CONCRETE WASHOUT STRUCTURE NEEDS TO BE CLEARY MARKED WITH SIGNAGE NOTING DEVICE.

PLAN

ABOVE GRADE WASHOUT STRUCTURE
NOT TO SCALE

NCGO1-SELF INSPECTION, RECORDKEEPING & REPORTING

EFFECTIVE: 04/01/19

PART III
SELF-INSPECTION, RECORDKEEPING AND REPORTING

SECTION A: SELF-INSPECTION

Self-inspections are required during normal business hours in accordance with the table below. When adverse weather or site conditions would cause the safety of the inspection personnel to be in jeopardy, the inspection may be delayed until the next business day on which it is safe to perform the inspection. In addition, when a storm event of equal to or greater than 1.0 inch occurs outside of normal business hours, the self-inspection shall be performed upon the commencement of the next business day. Any time when inspections were delayed shall be noted in the Inspection Record.

Inspect	Frequency (during normal business hours)	Inspection records must include:
(1) Rain gauge maintained in good working order	Daily	Daily rainfall amounts. If no daily rain gauge observations are made during weekend or holiday periods, and no individual-day rainfall information is available, record the cumulative rain measurement for those un-attended days (and this will determine if a site inspection is needed). Days on which no rainfall occurred shall be recorded as "zero." The permittee may use another rain-monitoring device approved by the Division.
(2) E&SC Measures	At least once per 7 calendar days and within 24 hours of a rain event ≥ 1.0 inch in 24 hours	1. Identification of the measures inspected, 2. Date and time of the inspection, 3. Name of the person performing the inspection, 4. Indication of whether the measures were operating properly, 5. Description of maintenance needs for the measure, 6. Description, evidence, and date of corrective actions taken.
(3) Stormwater discharge outfalls (SDOs)	At least once per 7 calendar days and within 24 hours of a rain event ≥ 1.0 inch in 24 hours	1. Identification of the discharge outfalls inspected, 2. Date and time of the inspection, 3. Name of the person performing the inspection, 4. Evidence of indicators of stormwater pollution such as oil sheen, floating or suspended solids or discoloration, 5. Indication of visible sediment leaving the site, 6. Description, evidence, and date of corrective actions taken.
(4) Perimeter of site	At least once per 7 calendar days and within 24 hours of a rain event ≥ 1.0 inch in 24 hours	If visible sedimentation is found outside site limits, then a record of the following shall be made: 1. Actions taken to clean up or stabilize the sediment that has left the site limits, 2. Description, evidence, and date of corrective actions taken, and 3. An explanation as to the actions taken to control future releases.
(5) Streams or wetlands onsite or offsite (where accessible)	At least once per 7 calendar days and within 24 hours of a rain event ≥ 1.0 inch in 24 hours	If the stream or wetland has increased visible sedimentation or a stream has visible increased turbidity from the construction activity, then a record of the following shall be made: 1. Description, evidence and date of corrective actions taken, and 2. Records of the required reports to the appropriate Division Regional Office per Part III, Section C, Item (2)(a) of this permit of this permit.
(6) Ground stabilization measures	After each phase of grading	1. The phase of grading (installation of perimeter E&SC measures, clearing and grubbing, installation of storm drainage facilities, completion of all land-disturbing activity, construction or redevelopment, permanent ground cover). 2. Documentation that the required ground stabilization measures have been provided within the required timeframe or an assurance that they will be provided as soon as possible.

NOTE: The rain inspection resets the required 7 calendar day inspection requirement.

PART III
SELF-INSPECTION, RECORDKEEPING AND REPORTING

SECTION B: RECORDKEEPING

1. E&SC Plan Documentation

The approved E&SC plan as well as any approved deviation shall be kept on the site. The approved E&SC plan must be kept up-to-date throughout the coverage under this permit. The following items pertaining to the E&SC plan shall be documented in the manner described:

Item to Document	Documentation Requirements
(a) Each E&SC Measure has been installed and does not significantly deviate from the locations, dimensions and relative elevations shown on the approved E&SC Plan.	Initial and date each E&SC Measure on a copy of the approved E&SC Plan or complete, date and sign an inspection report that lists each E&SC Measure shown on the approved E&SC Plan. This documentation is required upon the initial installation of the E&SC Measures or if the E&SC Measures are modified after initial installation.
(b) A phase of grading has been completed.	Initial and date a copy of the approved E&SC Plan or complete, date and sign an inspection report to indicate completion of the construction phase.
(c) Ground cover is located and installed in accordance with the approved E&SC Plan.	Initial and date a copy of the approved E&SC Plan or complete, date and sign an inspection report to indicate compliance with approved ground cover specifications.
(d) The maintenance and repair requirements for all E&SC Measures have been performed.	Complete, date and sign an inspection report.
(e) Corrective actions have been taken to E&SC Measures.	Initial and date a copy of the approved E&SC Plan or complete, date and sign an inspection report to indicate the completion of the corrective action.

2. Additional Documentation

In addition to the E&SC Plan documents above, the following items shall be kept on the site and available for agency inspectors at all times during normal business hours, unless the Division provides a site-specific exemption based on unique site conditions that make this requirement not practical:

(a) This general permit as well as the certificate of coverage, after it is received.

(b) Records of inspections made during the previous 30 days. The permittee shall record the required observations on the Inspection Record Form provided by the Division or a similar inspection form that includes all the required elements. Use of electronically-available records in lieu of the required paper copies will be allowed if shown to provide equal access and utility as the hard-copy records.

(c) All data used to complete the Notice of Intent and older inspection records shall be maintained for a period of three years after project completion and made available upon request. [40 CFR 122.41]

PART III
SELF-INSPECTION, RECORDKEEPING AND REPORTING

SECTION C: REPORTING

1. Occurrences that must be reported

Permittees shall report the following occurrences:

(a) Visible sediment deposition in a stream or wetland.

(b) Oil spills if:
- They are 25 gallons or more,
- They are less than 25 gallons but cannot be cleaned up within 24 hours,
- They cause sheen on surface waters (regardless of volume), or
- They are within 100 feet of surface waters (regardless of volume).

(a) Releases of hazardous substances in excess of reportable quantities under Section 311 of the Clean Water Act (Ref: 40 CFR 110.3 and 40 CFR 117.3) or Section 102 of CERCLA (Ref: 40 CFR 302.4) or G.S. 143-215.85.

(b) Anticipated bypasses and unanticipated bypasses.

(c) Noncompliance with the conditions of this permit that may endanger health or the environment.

2. Reporting Timeframes and Other Requirements

After a permittee becomes aware of an occurrence that must be reported, he shall contact the appropriate Division regional office within the timeframes and in accordance with the other requirements listed below. Occurrences outside normal business hours may also be reported to the Division's Emergency Response personnel at (800) 662-7956, (800) 858-0368 or (919) 733-3300.

Occurrence	Reporting Timeframes (After Discovery) and Other Requirements
(a) Visible sediment deposition in a stream or wetland	• ***Within 24 hours***, an oral or electronic notification. • ***Within 7 calendar days***, a report that contains a description of the sediment and actions taken to address the cause of the deposition. Division staff may waive the requirement for a written report on a case-by-case basis. • If the stream is named on the NC 303(d) list as impaired for sediment-related causes, the permittee may be required to perform additional monitoring, inspections or apply more stringent practices if staff determine that additional requirements are needed to assure compliance with the federal or state impaired-waters conditions.
(b) Oil spills and release of hazardous substances per Item 1(b)-(c) above	• ***Within 24 hours***, an oral or electronic notification. The notification shall include information about the date, time, nature, volume and location of the spill or release.
(c) Anticipated bypasses [40 CFR 122.41(m)(3)]	• ***A report at least ten days before the date of the bypass, if possible***. The report shall include an evaluation of the anticipated quality and effect of the bypass.
(d) Unanticipated bypasses [40 CFR 122.41(m)(3)]	• ***Within 24 hours***, an oral or electronic notification. • ***Within 7 calendar days,*** a report that includes an evaluation of the quality and effect of the bypass.
(e) Noncompliance with the conditions of this permit that may endanger health or the environment[40 CFR 122.41(l)(7)]	• ***Within 24 hours***, an oral or electronic notification. • ***Within 7 calendar days***, a report that contains a description of the noncompliance, and its causes; the period of noncompliance, including exact dates and times, and if the noncompliance has not been corrected, the anticipated time noncompliance is expected to continue; and steps taken or planned to reduce, eliminate, and prevent reoccurrence of the noncompliance. [40 CFR 122.41(l)(6).
	• Division staff may waive the requirement for a written report on a case-by-case basis.

WithersRavenel
Engineers | Planners
137 S Wilmington Street | Suite 200 | Raleigh, NC 27601 | t: 919.469.3340 | license #: F-1479
www.withersravenel.com

PROJECT # SP 22-02

ROLESVILLE PUBLIC WORKS FACILITY

ROLESVILLE, NORTH CAROLINA

NCG01 DETAILS

Job No. 02210710.00	
Date 7/1/2022	Drawn By DBG
Checked By PED	Designer PED/DBG

NORTH CAROLINA PROFESSIONAL SEAL 049219 ENGINEER PAUL DEVLIN
Digitally signed by Paul Edward Devlin
DocuSigned by:
7/1/2022

Revisions

Sheet No.
C5.06

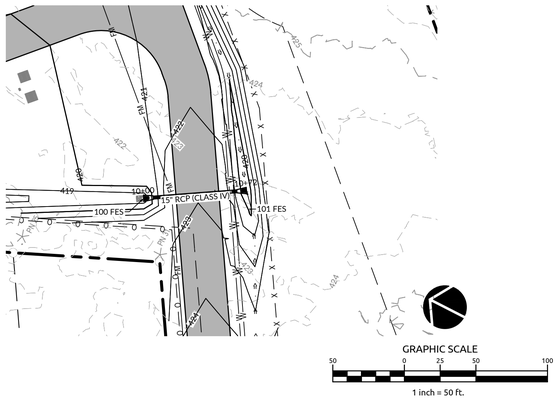

101 FES to 100 FES

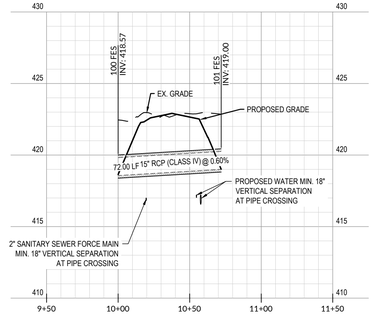

SCALE:

1" = 50' HORIZ.
1" = 5' VERT.

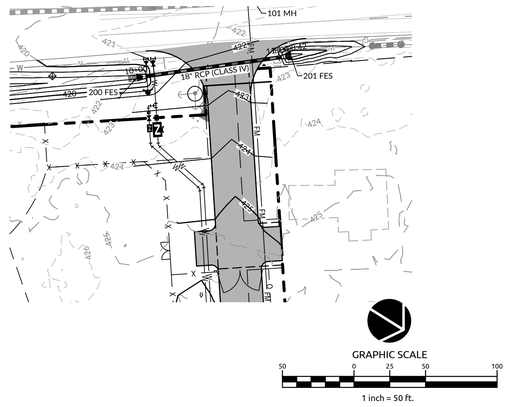

201 FES to 200 FES

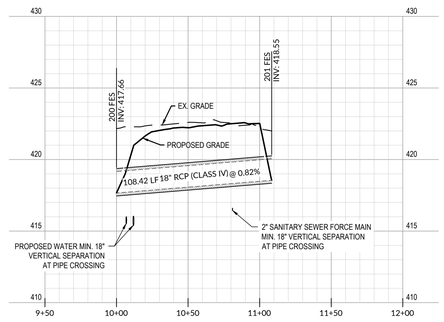

SCALE:

1" = 50' HORIZ.
1" = 5' VERT.

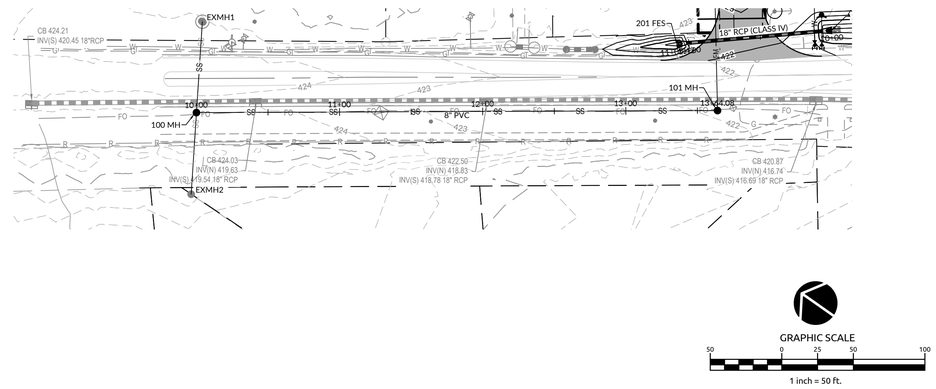

102 CO to 100 MH

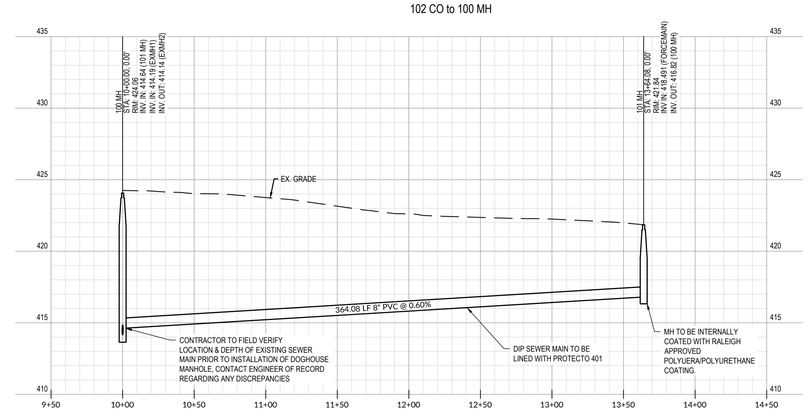

SCALE:

1" = 50' HORIZ.
1" = 5' VERT.

Public

Sewer Collection / Extension System

The City of Raleigh consents to the connection and extension of the City's public sewer system as shown on this plan. The material and Construction methods used for this project shall conform to the standards and specifications of the City's Public Utilities Handbook.

City of Raleigh
Public Utilities Department Permit # S-5071

Authorization to Construct See digital signature

CITY OF RALEIGH - PLANS AUTHORIZED FOR CONSTRUCTION

Plans for the proposed use have been reviewed for general compliance with applicable codes. This limited review, and authorization for construction is not to be considered to represent total compliance with all legal requirements for development and construction. The property owner, design consultants, and contractors are each responsible for compliance with all applicable City, State and Federal laws. This specific authorization below is not a permit, nor shall it be construed to permit any violation of City, State or Federal Law. All Construction must be in accordance with all Local, State, and Federal Rules and Regulations. This approval of this electronic document is only valid if the document has not been modified and the digital signature below is valid:

City of Raleigh Development Approval _____

WithersRavenel
Engineers | Planners
137 S Wilmington Street | Suite 200 | Raleigh, NC 27601 | t: 919.469.3940 | license # F-1479
www.withersravenel.com

PROJECT # SP 22-02

ROLESVILLE PUBLIC WORKS FACILITY

ROLESVILLE, NORTH CAROLINA

SS & STORM PLAN & PROFILES

Job No. 02210710.00	
Date 7/1/2022	Drawn By DBG
Checked By PED	Designer PED/DBG

NORTH CAROLINA PROFESSIONAL SEAL 049219 ENGINEER PAUL DEVLIN
7/1/2022

Revisions

Sheet No.
C6.00

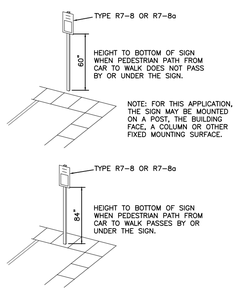

DISABLED/ACCESSIBLE SIGNAGE LOCATION
NOT TO SCALE

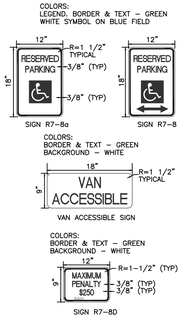

DISABLED/ACCESSIBLE SIGNAGE ELEVATION
NOT TO SCALE

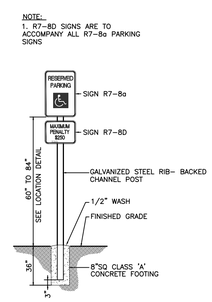

DISABLED/ACCESSIBLE SIGNAGE ELEVATION
NOT TO SCALE

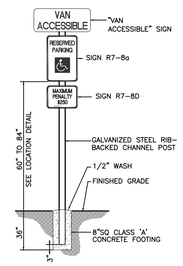

"VAN ACCESSIBLE" SIGN ELEVATION
NOT TO SCALE

HANDICAP SIGNAGE DETAIL

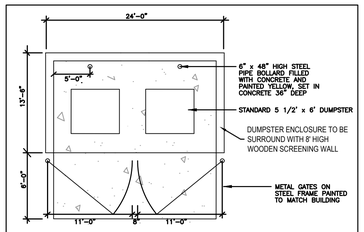

DUMPSTER ENCLOSURE PLAN VIEW
NOT TO SCALE

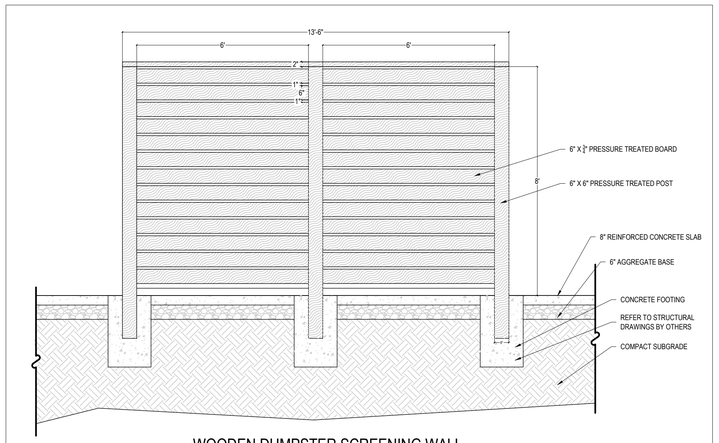

WOODEN DUMPSTER SCREENING WALL
NOT TO SCALE

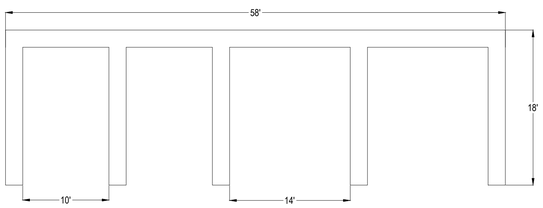

PLAN

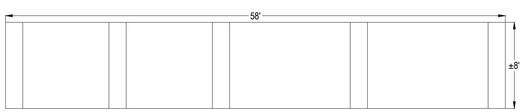

FRONT ELEVATION

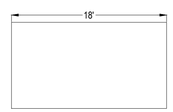

SIDE ELEVATION

MATERIAL STORAGE BAYS BY OWNER
HEIGHT TO VARY FROM 4' TO 10' AS NECESSARY
MATERIALS ARE TO BE 2'X4'X'2 AND 2'X6'X2' CONCRETE BLOCKS
SCALE: NTS

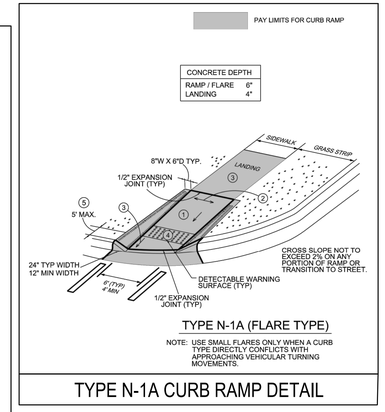

TYPE N-1A (FLARE TYPE)

NOTE: USE SMALL FLARES ONLY WHEN A CURB TYPE DIRECTLY CONFLICTS WITH APPROACHING VEHICULAR TURNING MOVEMENTS.

TYPE N-1A CURB RAMP DETAIL

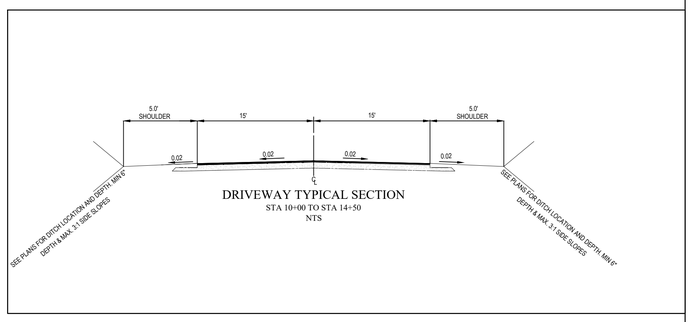

DRIVEWAY TYPICAL SECTION
STA 10+00 TO STA 14+50
NTS

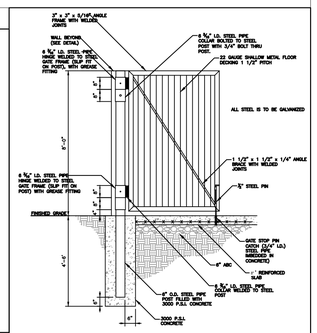

DUMPSTER ENCLOSURE GATE
NOT TO SCALE

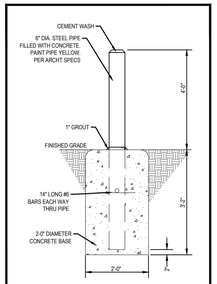

BOLLARD DETAIL
SCALE: NTS

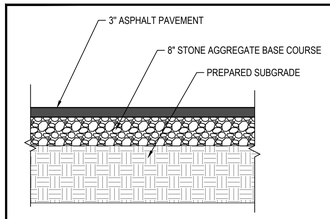

STANDARD DUTY ASPHALT PAVEMENT SECTION
SCALE: NTS

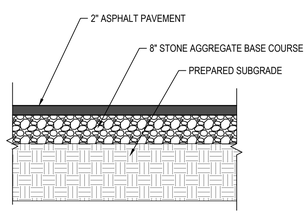

LIGHT DUTY ASPHALT PAVEMENT SECTION
SCALE: NTS

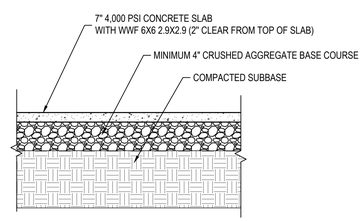

TYPICAL CONCRETE PAVEMENT SECTION
SCALE: NTS

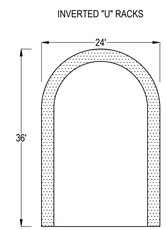

NOTES:
1. PARKING PAD IS 6" CONCRETE SLAB. SIZE SHOWN IS 4'X6' MIN. PAD FOR SINGLE RACK AND 2'-6" ADDITIONAL WIDTH PER RACK FOR RACKS TO BE SPACED 2'-6" O.C. IF MORE THAN ONE.
2. 5' WIDE UNOBSTRUCTED MANEUVERING AREA IS REQUIRED BEHIND RACKS WHEN ORIENTED PARALLEL TO A SIDEWALK AS SHOWN; REQUIRES 4'X11' MIN. PAD.
3. RACKS SHALL BE FLANGE MOUNTED AND SHALL HAVE BLACK POLYESTER POWDER COAT. OTHER PLACEMENTS SHALL MEET MINIMUM SIZE REQUIREMENTS.
4. BICYCLE PARKING SHALL NOT ENCROACH ON ACCESSIBLE PATHS.
5. DESIGNATED PLACEMENT WITHIN PARKING LOTS MAY ALSO BE ACCEPTABLE.

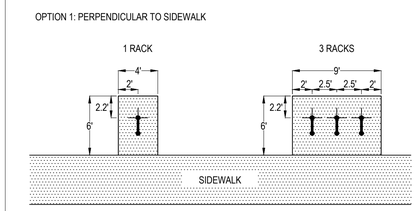

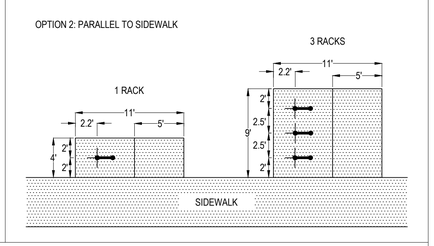

BICYCLE PARKING

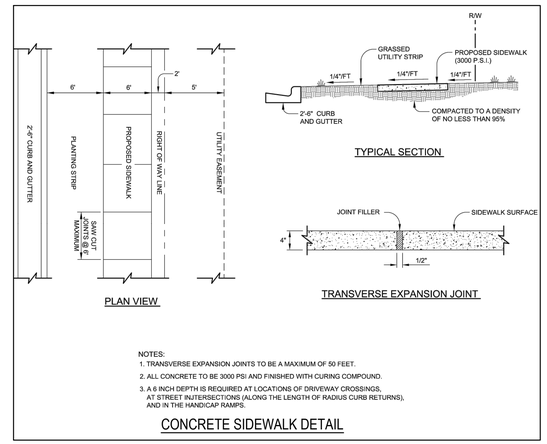

NOTES:
1. TRANSVERSE EXPANSION JOINTS TO BE A MAXIMUM OF 50 FEET.
2. ALL CONCRETE TO BE 3000 PSI AND FINISHED WITH CURING COMPOUND.
3. A 6 INCH DEPTH IS REQUIRED AT LOCATIONS OF DRIVEWAY CROSSINGS, AT STREET INJTERSECTIONS (ALONG THE LENGTH OF RADIUS CURB RETURNS), AND IN THE HANDICAP RAMPS.

CONCRETE SIDEWALK DETAIL

WithersRavenel
Engineers | Planners
137 S Wilmington Street | Suite 200 | Raleigh, NC 27601 | t: 919-469-3340 | license # F-1479
www.withersravenel.com

PROJECT # SP 22-02
ROLESVILLE PUBLIC WORKS FACILITY
ROLESVILLE, NORTH CAROLINA

SITE DETAILS

Job No. 02210710.00	
Date 7/1/2022	Drawn By DBG
Checked By PED	Designer PED/DBG

NORTH CAROLINA PROFESSIONAL SEAL 049219 ENGINEER PAUL DEVLIN 7/1/2022

Revisions

Sheet No.
C7.00

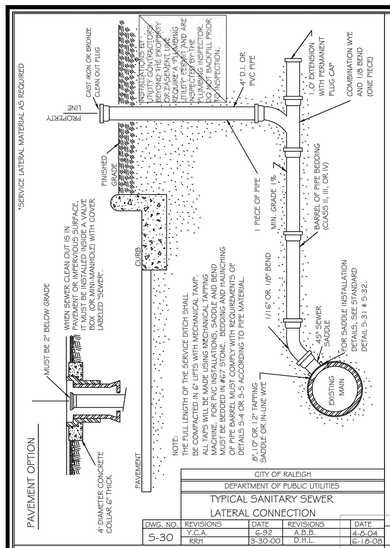

CITY OF RALEIGH
DEPARTMENT OF PUBLIC UTILITIES
TYPICAL SANITARY SEWER LATERAL CONNECTION

DWG. NO.	REVISIONS	DATE	REVISIONS	DATE
5-30	Y.C.A.	6-92	A.B.B.	4-6-04
	RRH	3-30-00	D.H.L.	6-18-08

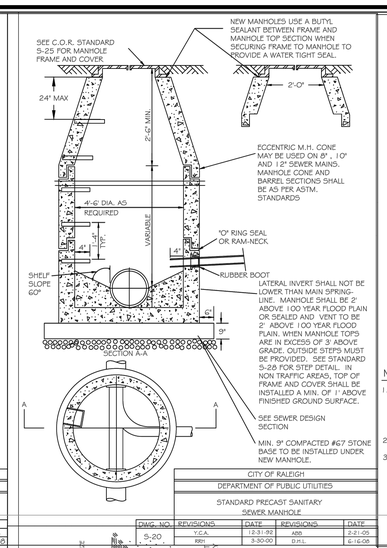

CITY OF RALEIGH
DEPARTMENT OF PUBLIC UTILITIES
STANDARD PRECAST SANITARY SEWER MANHOLE

DWG. NO.	REVISIONS	DATE	REVISIONS	DATE
5-20	Y.C.A.	12-31-92	ABB	2-21-05
	RRH	3-30-00	D.H.L.	6-18-08

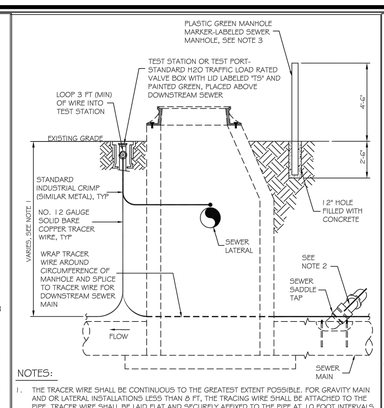

NOTES:
1. THE TRACER WIRE SHALL BE CONTINUOUS TO THE GREATEST EXTENT POSSIBLE. FOR GRAVITY MAIN AND OR LATERAL INSTALLATIONS LESS THAN 6 FT, THE TRACING WIRE SHALL BE ATTACHED TO THE PIPE. TRACER WIRE SHALL BE LAID FLAT AND SECURELY AFFIXED TO THE PIPE AT 10 FOOT INTERVALS. FOR GRAVITY MAIN AND OR LATERAL INSTALLATION DEEPER THAN 8 FT, THE TRACING WIRE SHALL BE INSTALLED AT A DEPTH OF 7-8 FT. THE WIRE SHALL BE PROTECTED FROM DAMAGE DURING THE EXECUTION OF THE WORK. NO BREAKS OF CUTS IN THE TRACER WIRE SHALL BE PERMITTED. WHERE LATERAL TAPS ARE MADE BY SERVICE SADDLES, THE TRACER WIRE SHALL NOT BE ALLOWED TO TO BE PLACED BETWEEN THE SADDLE AND MAIN.
2. MANHOLE MARKERS SHALL BE PLACED ADJACENT TO MANHOLES AT THE DISCRETION OF OWNER OR OWNER'S REPRESENTATIVE.

CITY OF RALEIGH
DEPARTMENT OF PUBLIC UTILITIES
GRAVITY SEWER MAIN TRACER WIRE AND MANHOLE MARKER

DWG. NO.	REVISIONS	DATE	REVISIONS	DATE
5-20A	WKD	09-14		

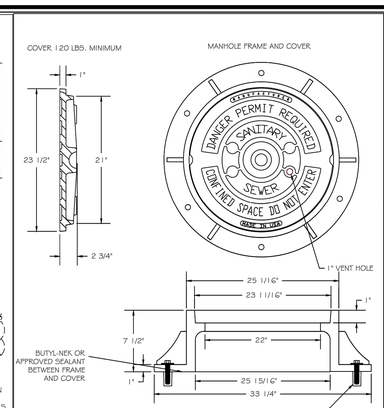

NOTES:
1) ALL MANHOLE FRAMES SHALL BE DOMESTICALLY CAST.
2) FRAME SHALL BE A MINIMUM WTIGHT OF 1,152 LBS. WITHIN PUBLIC ROW AND 1,120 LBS. WITHIN EASEMENTS.
3) COVER SHALL WTIGH A MIN. OF 120 LBS.
4) ALL MANHOLE FRAMES OUTSIDE OF PAVED SURFACES SHALL BE BOLTED TO THE CONE SECTION OR RING WITH A MINIMUM OF 4 BOLTS PER FRAME.

CITY OF RALEIGH
DEPARTMENT OF PUBLIC UTILITIES
STANDARD MANHOLE COVER

DWG. NO.	REVISIONS	DATE	REVISIONS	DATE
5-25	3-1-87	3-1-87	A.B.B.	2-9-05
	RRH	3-30-00	D.H.L.	6-18-08

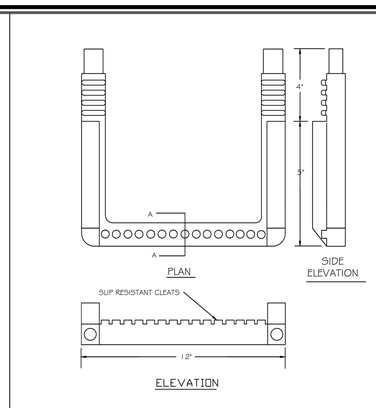

CITY OF RALEIGH
DEPARTMENT OF PUBLIC UTILITIES
STANDARD SLIP RESISTANT MANHOLE STEP DETAIL

DWG. NO.	REVISIONS	DATE	REVISIONS	DATE
5-28	RRH	3-30-00		

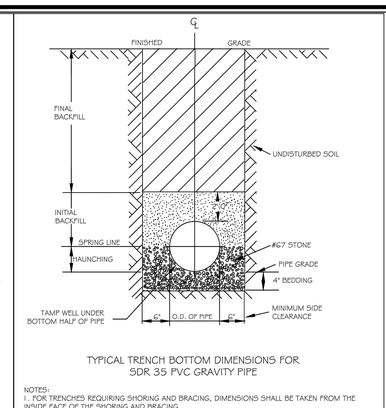

TYPICAL TRENCH BOTTOM DIMENSIONS FOR SDR 35 PVC GRAVITY PIPE

NOTES:
1. FOR TRENCHES REQUIRING SHORING AND BRACING, DIMENSIONS SHALL BE TAKEN FROM THE INSIDE FACE OF THE SHORING AND BRACING.
2. NO ROCKS OR BOULDERS 4" OR LARGER TO BE USED IN INITIAL BACKFILL.
3. ALL BACKFILL MATERIAL SHALL BE SUITABLE NATIVE MATERIAL.
4. BACKFILL SHALL BE TAMPED IN 6" LIFTS IN TRAFFIC AREAS, 12" IN NON-TRAFFIC AREAS.

CITY OF RALEIGH
DEPARTMENT OF PUBLIC UTILITIES
TRENCH BOTTOM DIMENSIONS AND BACKFILLING REQUIREMENTS FOR PVC GRAVITY SEWER MAIN

DWG. NO.	REVISIONS	DATE	REVISIONS	DATE
5-5	TO NOTES	3-1-87	D.W.C.	9-3-99
		7-2-82	RRH	3-30-00

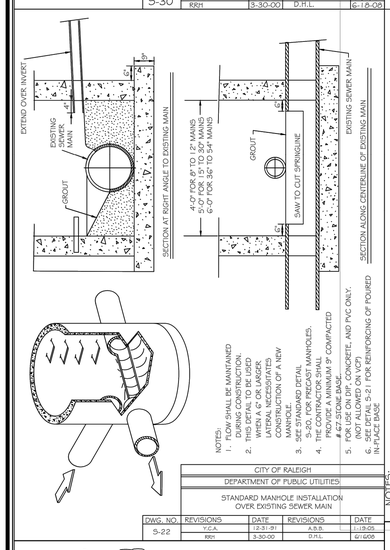

NOTES:
1. FLOW SHALL BE MAINTAINED DURING CONSTRUCTION.
2. THIS DETAIL TO BE USED WHEN A CONNECTION TO LATERAL NECESSITATES CONSTRUCTION OF A NEW MANHOLE.
3. SEE STANDARD DETAIL 5-20, FOR PRECAST MANHOLES.
4. THE CONTRACTOR SHALL PROVIDE A MINIMUM 3" COMPACTED #67 STONE BASE.
5. FOR USE ON DIP, CONCRETE, AND PVC ONLY. DO NOT USE ON VCP.
6. SEE DETAIL 5-21 FOR REINFORCING OF FOURED IN-PLACE BASE.

CITY OF RALEIGH
DEPARTMENT OF PUBLIC UTILITIES
STANDARD MANHOLE INSTALLATION OVER EXISTING SEWER MAIN

DWG. NO.	REVISIONS	DATE	REVISIONS	DATE
5-22	Y.C.A.	12-31-91	A.B.B.	1-19-05
	RRH	3-30-00	D.H.L.	6/6/08

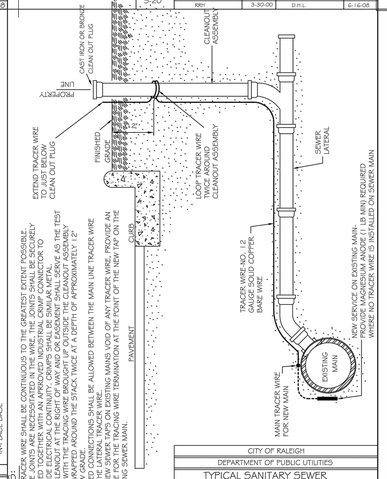

NOTES:
1. TRACER WIRE SHALL BE CONTINUOUS TO THE GREATEST EXTENT POSSIBLE. WHERE JOINTS ARE NECESSITATED IN THE WIRE, THE JOINTS SHALL BE SECURELY BONDED TOGETHER WITH AN APPROVED INDUSTRIAL CRIMP CONNECTOR TO ENSURE ELECTRICAL CONTINUITY. THE TRACER WIRE SHALL BE SECURELY TAPED TO THE CLEANOUT AT THE RIGHT OF WAY AND OR EASEMENT SHALL BE LOOPED TWICE AROUND THE STACK AT A DEPTH OF APPROXIMATELY 12" AND WRAPPED AROUND THE STACK TWICE AT A DEPTH OF APPROXIMATELY 12" BELOW GRADE.
2. ALL TRACER WIRE CONNECTIONS SHALL BE ALLOWED BETWEEN THE MAIN WIRE AND THE LATERAL TRACER WIRE.
3. ALL TRACER WIRE SHALL BE PROVIDED ON SEWER MAINS VOID OF ANY TRACER WIRE.
4. ANODE FOR THE TRACING WIRE TERMINATION AT THE POINT OF THE NEW TAP ON THE EXISTING SEWER MAIN.

CITY OF RALEIGH
DEPARTMENT OF PUBLIC UTILITIES
TYPICAL SANITARY SEWER LATERAL TRACER WIRE

DWG. NO.	REVISIONS	DATE	REVISIONS	DATE
5-30A	WKD	9-14		

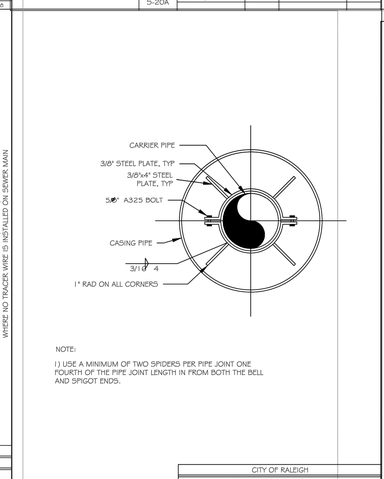

NOTE:
1) USE A MINIMUM OF TWO SPIDERS PER PIPE JOINT ONE FOURTH OF THE PIPE JOINT LENGTH IN FROM BOTH THE BELL AND SPIGOT ENDS.

CITY OF RALEIGH
DEPARTMENT OF PUBLIC UTILITIES
PIPE ALIGNMENT GUIDE

DWG. NO.	REVISIONS	DATE	REVISIONS	DATE
S-39	RRH	3-31-00		
	A.B.B.	4-16-04		

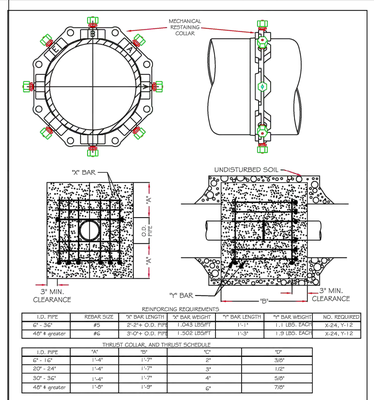

REINFORCING REQUIREMENTS

I.D. PIPE	REBAR SIZE	"X" BAR LENGTH	"X" BAR WEIGHT	"Y" BAR LENGTH	"Y" BAR WEIGHT	NO. REQUIRED
6"-36"	#5	2'-2"+ O.D. PIPE	1.043 LBS/FT	1'-1"	1.1 LBS. EACH	X-24, Y-12
48" & greater	#6	3'-0"+ O.D. PIPE	1.502 LBS/FT	1'-3"	1.9 LBS. EACH	X-24, Y-12

THRUST COLLAR, AND THRUST SCHEDULE

I.D. PIPE	"A"	"B"	"C"	"D"
6"-12"	1'-4"	1'-7"	2"	3/8"
20"-24"	1'-4"	1'-7"	3"	1/2"
30"-36"	1'-4"	1'-7"	4"	5/8"
48" & greater	1'-0"	1'-9"	6"	7/8"

NOTES:
1. CONCRETE SHALL BE 3000 PSI AND TRANSIT MIXED.
2. REINFORCING BARS SHALL BE DEFORMED AND TIED TOGETHER.
3. TRENCH BOTTOM WIDTH IN VICINITY OF THRUST BLOCK INSTALLATION SHALL BE THE MINIMUM WIDTH AS SHOWN ON STANDARD DETAIL 5-4, 5-5.
4. BACKFILL TAMPED IN 6" LIFTS PER STANDARD DETAIL 5-4, 5-5.
5. MECHANICAL RESTAINING COLLAR SHALL BE AS MANUFACTURED BY MEGA-LUG OR EQUAL.

CITY OF RALEIGH
DEPARTMENT OF PUBLIC UTILITIES
RESTRAINING COLLAR DESIGN DATA FOR PVC FORCE MAINS

DWG. NO.	REVISIONS	DATE	REVISIONS	DATE
S-6a	RRH	3-31-00	J.P.S.	10-8-10
	D.H.L.	6-18-08		

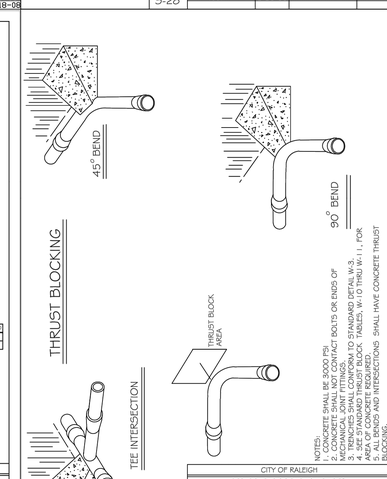

NOTES:
1. CONCRETE SHALL BE 3000 PSI
2. CONCRETE SHALL NOT CONTACT BOLTS OR ENDS OF MECHANICAL JOINT FITTINGS.
3. THRUST BLOCKING TO STANDARD DETAIL W-3, W-4, W-5, W-6 AND W-7 TABLES, W-10 THRU W-11, FOR ALL BENDS AND INTERSECTIONS SHALL HAVE CONCRETE THRUST BLOCKING.

CITY OF RALEIGH
DEPARTMENT OF PUBLIC UTILITIES
STANDARD THRUST BLOCKING VIEWS

DWG. NO.	REVISIONS	DATE	REVISIONS	DATE
S-7	D.W.C.	3-1-87	RRH	3-31-00
		9-7-99	D.H.L.	6-18-08

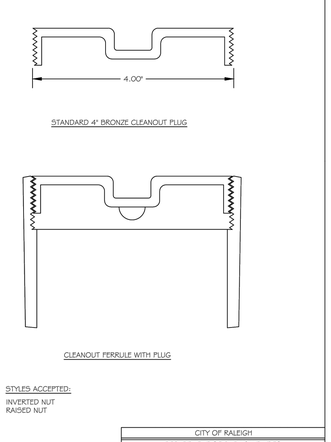

STYLES ACCEPTED:
INVERTED NUT
RAISED NUT

CITY OF RALEIGH
DEPARTMENT OF PUBLIC UTILITIES
4" CLEANOUT PLUG

DWG. NO.	REVISIONS	DATE	REVISIONS	DATE
S-34	D.W.C.	3-1-87	RRH	3-30-00
		3-27-98		

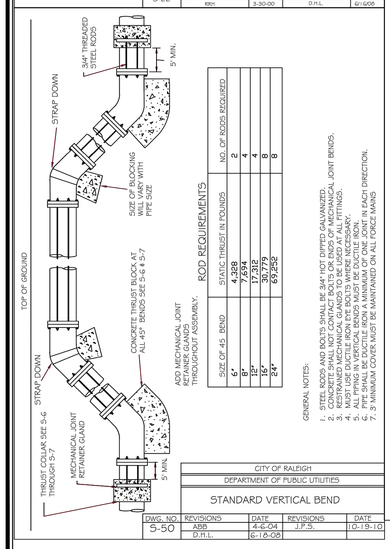

ROD REQUIREMENTS

SIZE OF 45 BEND	STATIC THRUST IN POUNDS	NO. OF RODS REQUIRED
6"	4,288	2
8"	7,624	4
12"	17,312	4
16"	30,779	8
24"	69,252	8

ADD MECHANICAL JOINT RETAINER GLANDS THROUGHOUT ASSEMBLY.

GENERAL NOTES:
1. STEEL RODS AND BOLTS SHALL BE 3/4" HOT DIPPED GALVANIZED.
2. CONCRETE SHALL NOT CONTACT BOLTS OR ENDS OF MECHANICAL JOINT BENDS.
3. RESTRAINED MECHANICAL GLANDS TO BE USED AT ALL FITTINGS.
4. MUST USE DUCTILE IRON PIPE BOLTS WHERE NECESSARY.
5. ALL RODS, NUTS AND WASHERS MUST BE COATED.
6. PIPE SHALL BE DUCTILE IRON A MINIMUM OF ONE JOINT IN EACH DIRECTION.
7. 3' MINIMUM COVER MUST BE MAINTAINED ON ALL FORCE MAINS

CITY OF RALEIGH
DEPARTMENT OF PUBLIC UTILITIES
STANDARD VERTICAL BEND

DWG. NO.	REVISIONS	DATE	REVISIONS	DATE
S-50	ABB	4-6-04	J.P.S.	10-19-10
	D.H.L.	6-18-08		

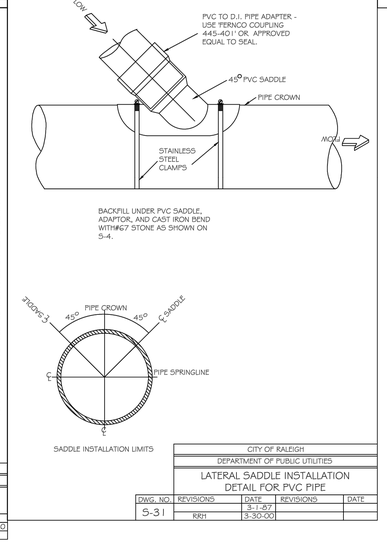

CITY OF RALEIGH
DEPARTMENT OF PUBLIC UTILITIES
LATERAL SADDLE INSTALLATION DETAIL FOR PVC PIPE

DWG. NO.	REVISIONS	DATE	REVISIONS	DATE
S-31		3-1-87		
	RRH	3-30-00		

Public
Sewer Collection / Extension System
The City of Raleigh consents to the connection and extension of the City's public sewer system as shown on this plan. The material and Construction methods used for this project shall conform to the standards and specifications of the City's Public Utilities Handbook.

City of Raleigh
Public Utilities Department Permit # S-5071

Authorization to Construct See digital signature

CITY OF RALEIGH - PLANS AUTHORIZED FOR CONSTRUCTION

Plans for the proposed use have been reviewed for general compliance with applicable codes. This limited review, and authorization for construction is not to be considered to represent total compliance with all legal requirements for development and construction. The property owner, design consultants, and contractors are each responsible for compliance with all applicable City, State and Federal laws. This specific authorization below is not a permit, nor shall it be construed to permit any violation of City, State or Federal Law. All Construction must be in accordance with all Local, State, and Federal Rules and Regulations. This approval of this electronic document is only valid if the document has not been modified and the digital signature below is valid:

City of Raleigh Development Approval _____

WithersRavenel
Engineers | Planners
137 S Wilmington Street | Suite 200 | Raleigh, NC 27601 | t: 919.469.3340 | license # F-1479
www.withersravenel.com

PROJECT # SP 22-02
ROLESVILLE PUBLIC WORKS FACILITY
ROLESVILLE, NORTH CAROLINA

SANITARY SEWER DETAILS

Job No. 02210710.00	
Date 7/1/2022	Drawn By DBG
Checked By PED	Designer PED/DBG

NORTH CAROLINA PROFESSIONAL SEAL 049219 ENGINEER PAUL DEVLIN 7/1/2022

Revisions

Sheet No.
C7.01

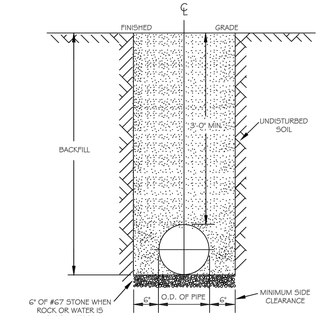

NOTES:
1. TRENCHES REQUIRING SHORING AND BRACING, DIMENSIONS SHALL BE TAKEN FROM THE INSIDE FACE OF THE SHORING AND BRACING.
2. NO ROCKS OR BOULDERS 4" OR LARGER TO BE USED IN BACKFILL.
3. ALL BACKFILL MATERIAL SHALL BE SUITABLE NATIVE MATERIAL.
4. BACKFILL SHALL BE TAMPED IN 6" LIFTS.
5. ACHIEVE 95% COMPACTION IN BACKFILL.

CITY OF RALEIGH
DEPARTMENT OF PUBLIC UTILITIES
TRENCH BOTTOM DIMENSIONS & BACKFILLING REQUIREMENTS FOR DUCTILE IRON

DWG. NO.	REVISIONS	DATE	REVISIONS	DATE
W-3	D.W.C.	9-3-99	ABB	2-15-05
	RRH	3-31-00	J.P.S.	10-29-10

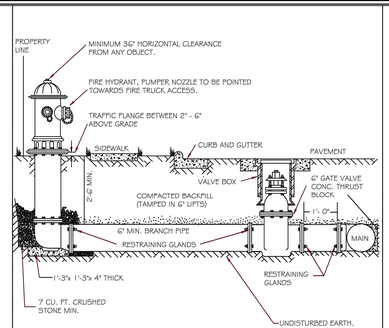

NOTES:
1. FIRE HYDRANT SHALL BE AS MANUFACTURED: MUELLER, AMERICAN DARLING, KENNEDY, MAH, WATEROUS, CLOW, EAST JORDAN IRON WORKS, OR US PIPE.
2. BRANCH PIPE SHALL BE DUCTILE IRON AWWA C150-96
3. 6" GATE VALVE SHALL BE AWWA C500-96 OPEN LEFT
4. STEEL RODS AND BOLTS SHALL BE 3/4" HOT DIPPED GALVANIZED
5. FIRE HYDRANTS WILL BE INSTALLED IN TRUE VERTICAL POSITION RODS SHALL NOT BE COUPLED MORE THAN ONCE. IF THE LENGTH FROM THE VALVE TO THE HYDRANT EXCEEDS 20' THEN A MECHANICAL RESTRAINING GLAND WITH A REBAR CAGE SHALL BE INSTALLED NO MORE THAN 10' FROM HYDRANT AND POURED IN CONCRETE. FIRE HYDRANTS TO BE LOCATED IN ROW OR 2' FOOT EASEMENT ADJACENT TO ROW

ANYTIME SITE WORK, CONSTRUCTION, ROAD WORK, OR ANY OTHER WORK CHANGES THE GRADE OF THE FIRE HYDRANT, THE PERSON RESPONSIBLE FOR THE WORK IS RESPONSIBLE FOR ADJUSTING THE FIRE HYDRANT TO STAY WITHIN COMPLIANCE.

CITY OF RALEIGH
DEPARTMENT OF PUBLIC UTILITIES
STANDARD FIRE HYDRANT INSTALLATION DETAIL

DWG. NO.	REVISIONS	DATE	REVISIONS	DATE
W-4	ABB	4-6-04		
	DHL	2/14/08		

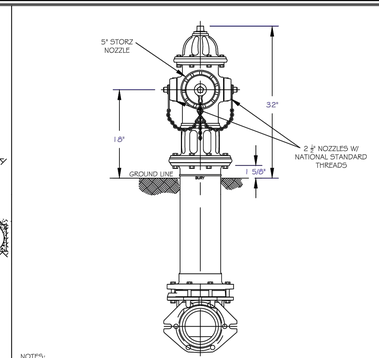

NOTES:
1. RALEIGH PUBLIC HYDRANTS SHALL BE PAINTED SOLID RED.
2. KNIGHTDALE, # ROLESVILLE PUBLIC HYDRANTS SHALL BE PAINTED RED W/SILVER OPERATING NUTS.
3. ZEBULON PUBLIC HYDRANTS SHALL BE PAINTED RED W/ SILVER BONNETS AND OPERATING NUTS.
4. WAKE FOREST AND GARNER, AND WENDELL PUBLIC AND PRIVATE HYDRANTS TO BE PAINTED SAFETY YELLOW W/SILVER CAPS AND OPERATING NUTS.
5. OPERATING NUTS ON HYDRANTS CONNECTED TO PUBLIC MAINS LARGER THAN 12" SHALL BE PAINTED BLACK.

CITY OF RALEIGH
DEPARTMENT OF PUBLIC UTILITIES
RALEIGH, GARNER, KNIGHTDALE, ROLESVILLE, WAKE FOREST, WENDELL & ZEBULON
STANDARD FIRE HYDRANT WITH 5" STORZ PUMPER NOZZLE

DWG. NO.	REVISIONS	DATE	REVISIONS	DATE
W-5		3-1-07	ABB	7-21-05
	RRH	3-31-00	DHL	2-18-08

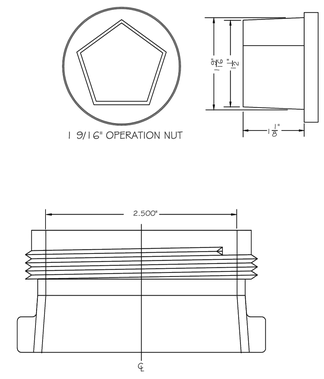

CITY OF RALEIGH
DEPARTMENT OF PUBLIC UTILITIES
HYDRANT OPERATING NUT AND 2 1/2" OUTLET THREADS

DWG. NO.	REVISIONS	DATE	REVISIONS	DATE
W-6	RRH	3-31-00	DHL	2-18-08
	A.B.B.	4-13-04	J.P.S.	11-1-10

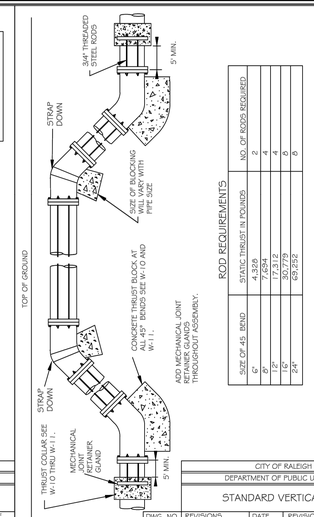

ROD REQUIREMENTS

SIZE OF 45° BEND	STATIC THRUST IN POUNDS	NO. OF RODS REQUIRED
6"	4,328	2
8"	7,694	4
12"	17,312	4
16"	30,779	6
24"	69,252	6

GENERAL NOTES:
1. ALL FITTINGS AND FITTINGS TO BE DUCTILE IRON, GALVANIZED
2. STEEL RODS AND BOLTS SHALL BE 3/4" HOT DIPPED GALVANIZED.
3. CONCRETE SHALL NOT CONTACT BOLTS OR ENDS OF MECHANICAL JOINT BENDS.
4. MUST USE DUCTILE IRON EYE BOLTS WHERE NECESSARY.
5. 3' MINIMUM COVER MUST BE MAINTAINED ON ALL WATER MAINS

CITY OF RALEIGH
DEPARTMENT OF PUBLIC UTILITIES
STANDARD VERTICAL BEND

DWG. NO.	REVISIONS	DATE	REVISIONS	DATE
W-12	ABB	4-6-04	J.P.S.	11-1-10
	D.H.L.	6-18-08		

TYPICAL NOTES:
1)-ALL PIPING AND FITTINGS TO BE DUCTILE IRON, GALVANIZED
2)-ALL VALVES TO BE OPEN LEFT
3)-FDC TO FACE FIRE APPARATUS ACCESS LOCATION (DRIVEWAY)
4)-DO NOT BLOCK APPARATUS ACCESS TO BUILDING WITH HOSE
5)-ALL PIPE AND FITTINGS TO BE 6" MIN.
6)-MINIMUM DISTANCE 5 FEET BEHIND CURB, PROTECT FROM VEHICLES
7)-PROVIDE REF PLATE AT FDC LOCATION TO NOTIFY FIRE PERSONNEL
8)-PROVIDE WEEP HOLES, & STEEL WINDOW REQUIREMENTS
9)-REFER TO TB-4

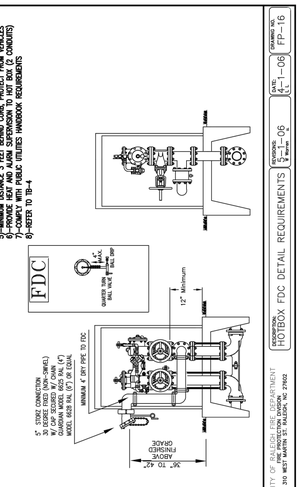

CITY OF RALEIGH FIRE DEPARTMENT
310 WEST HARGETT ST. RALEIGH, N.C. 27602
DESCRIPTION: HOTBOX FDC DETAIL REQUIREMENTS
DATE: 4-1-06 | DRAWING NO. FP-16
SCALE: 1/2"=1'-0" | 1"=1'-0"

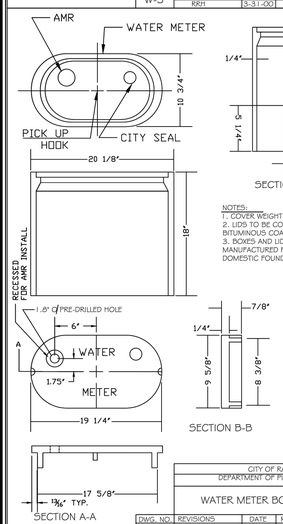

NOTES:
1. COVER WEIGHT: 13 LBS +/- 5%
2. LIDS TO BE COATED WITH BITUMINOUS COAL TAR COATING
3. BOWES AND LIDS MUST BE MANUFACTURED FROM SAME DOMESTIC FOUNDRY.

CITY OF RALEIGH
DEPARTMENT OF PUBLIC UTILITIES
WATER METER BOX DETAIL

DWG. NO.	REVISIONS	DATE	REVISIONS	DATE
W-25		ABB		1-20-05
	R.K.V.	8-20-13	J.P.S.	11-4-10

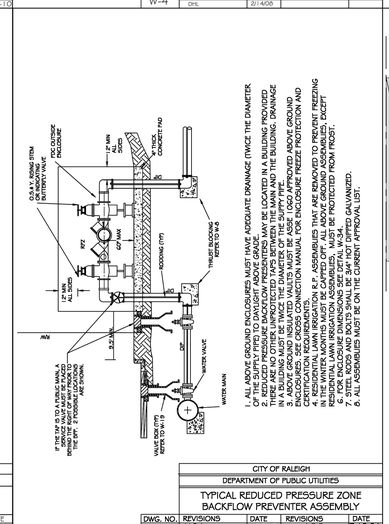

1. ALL ABOVE GROUND ENCLOSURES MUST HAVE ADEQUATE DRAINAGE (TWICE THE DIAMETER OF THE SUPPLY PIPE) TO DAYLIGHT ABOVE GRADE.
2. ALL ABOVE GROUND ENCLOSURES MAY BE LOCATED IN A BUILDING PROVIDED THERE ARE NO OTHER UNPROTECTED TAPS BETWEEN THE MAIN AND THE BUILDING. DRAINAGE IN ACCORDANCE WITH THE PLUMBING CODE MUST BE PROVIDED.
3. ABOVE GROUND INSULATED VALVES MUST BE ASSE 1060 APPROVED ABOVE GROUND ENCLOSURES. SEE CROSS CONNECTION MANUAL FOR ENCLOSURE FREEZE PROTECTION AND ASSE 1060 APPROVED VALVES.
4. RESIDENTIAL LAWN IRRIGATION B.P. ASSEMBLIES THAT ARE REMOVED TO PREVENT FREEZING MUST BE PROTECTED FROM INSERTION OF FOREIGN MATERIAL. RESIDENTIAL LAWN IRRIGATION ASSEMBLIES MUST BE PROTECTED FROM INSECT, EXCEPT WHEN IN OPERATION.
5. FOR ENCLOSURE DIMENSIONS SEE DETAIL W-34.
6. ALL ASSEMBLIES MUST BE ASSE 1060 APPROVED, GALVANIZED.
7. ALL ASSEMBLIES MUST BE ON THE CURRENT APPROVAL LIST.

CITY OF RALEIGH
DEPARTMENT OF PUBLIC UTILITIES
TYPICAL REDUCED PRESSURE ZONE BACKFLOW PREVENTER ASSEMBLY

DWG. NO.	REVISIONS	DATE	REVISIONS	DATE
W-36	Y.C.A.	12-31-91	A.B.B.	7-10-04
	D.W.C.	4-1-99	J.P.S.	6/19/08

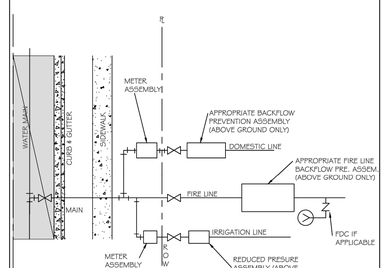

1. SERVICE TAPS FOR 2" AND SMALLER DOMESTIC SERVICES MAY BE BY CORPORATION COCKS. LARGER SERVICES WILL REQUIRE A TEE AND GATE VALVE OR TAPPING SLEEVE AND VALVE ASSEMBLY AND 90° BEND.
2. DOMESTIC SERVICE TAPS SHALL BE ALLOWED ONLY ON 6" OR LARGER FIRE LINES BEFORE THE BACKFLOW ASSEMBLY.
3. ONE DOMESTIC TAP PER FIRE LINE ON STREET SIDE OF BACKFLOW. 4. FIRE LINE SHALL HAVE A FIRE HYDRANT OR BLOW OFF ASSEMBLY AT ITS END TO FACILITATE FLUSHING WHEN NEEDED.
5. IRRIGATION METER SHALL BE LOCATED ON THE SIDE OF DOMESTIC METER WITH INCREASING ADDRESSES.
6. THE BACKFLOW SHALL BE INSTALLED NO MORE THAN 10' FROM THE METER IN A VISIBLE LOCATION.
7. DOMESTIC/IRRIGATION BACKFLOW RISER/STANDPIPE SHALL BE OF COPPER OR BRASS.
8. THE RP RELIEF VALVE SHALL BE A MINIMUM OF 12" ABOVE ANY MATERIAL (MULCH INCLUDED) OR GRADE.
9. A SERVICE VALVE IS REQUIRED AFTER THE METER BUT BEFORE THE BACKFLOW ASSEMBLY FOR MAINTENANCE AND REPLACEMENT PURPOSES.
10. THE INSTALLATION MUST ALSO MEET ALL CODE REQUIREMENTS PER THE NC PLUMBING CODE.

CITY OF RALEIGH
DEPARTMENT OF PUBLIC UTILITIES
FIRE, DOMESTIC & IRRIGATION OPTIONS SCHEMATIC

DWG. NO.	REVISIONS	DATE	REVISIONS	DATE
W-34	D.W.C.	11-18-99	A.B.B.	7-10-04
	RRH	3-31-00	D.H.L.	6/19/08

MANHOLE FRAME AND COVER
COVER 120 LBS. MINIMUM

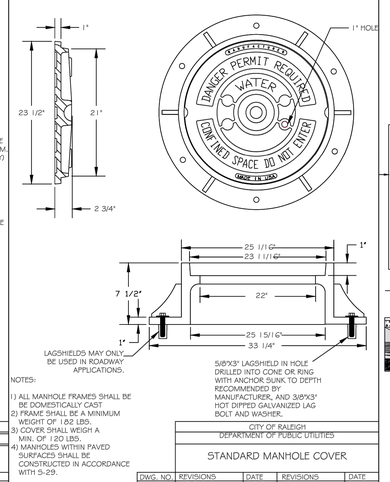

NOTES:
1) ALL MANHOLE FRAMES SHALL BE BE DOMESTICALLY CAST
2) FRAME SHALL BE A MINIMUM WEIGHT OF 182 LBS.
3) COVER SHALL WEIGH A MIN. OF 120 LBS.
4) MANHOLES WITHIN PAVED SURFACES SHALL BE CONSTRUCTED IN ACCORDANCE WITH S-29.

CITY OF RALEIGH
DEPARTMENT OF PUBLIC UTILITIES
STANDARD MANHOLE COVER

DWG. NO.	REVISIONS	DATE	REVISIONS	DATE
W-20	A.B.B.	4-6-04		
	D.H.L.	6-18-08		

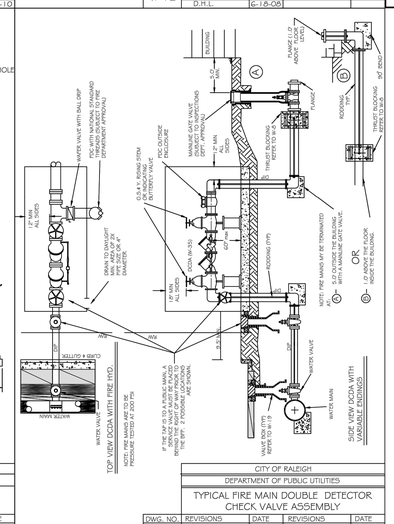

TYPICAL FIRE MAIN DOUBLE DETECTOR CHECK VALVE ASSEMBLY

DWG. NO.	REVISIONS	DATE	REVISIONS	DATE
W-37	Y.C.A.	6-92	ABB	10-4-04
	D.W.C.	11-3-99	D.H.L.	6/19/08

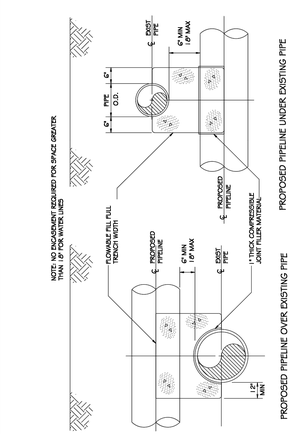

CITY OF RALEIGH
DEPARTMENT OF PUBLIC UTILITIES
CONCRETE CRADLE PROTECTION FOR WATER LINE CROSSINGS

DWG. NO.	REVISIONS	DATE	REVISIONS	DATE
W-41	DHL	2-20-08		

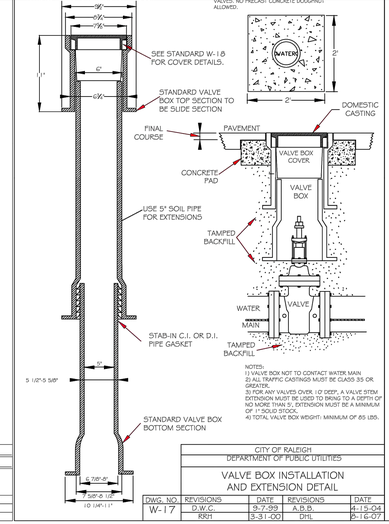

NOTES:
1) VALVE BOX NOT TO CONTACT WATER MAIN
2) ALL TRAFFIC CASTINGS MUST BE CLASS 35 OR GREATER.
3) FOR ANY VALVES OVER 10' DEEP, A VALVE STEM EXTENSION MAY BE USED TO BRING TO A DEPTH OF NO MORE THAN 5'. EXTENSION MUST BE A MINIMUM OF 5" WIDE SOLID STOCK.
4) TOTAL VALVE BOX WEIGHT: MINIMUM OF 85 LBS.

CITY OF RALEIGH
DEPARTMENT OF PUBLIC UTILITIES
VALVE BOX INSTALLATION AND EXTENSION DETAIL

DWG. NO.	REVISIONS	DATE	REVISIONS	DATE
W-17	D.W.C.	9-7-99	A.B.B.	4-15-04
	RRH	3-31-00	DHL	5-16-07

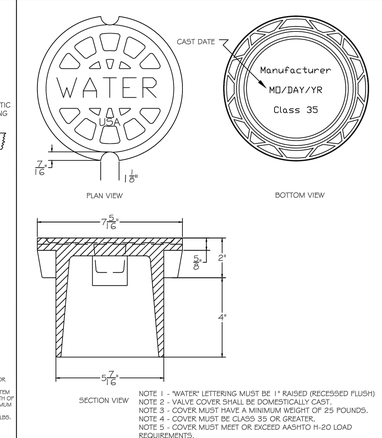

NOTE 1 - 'WATER' LETTERING MUST BE 1" RAISED (RECESSED FLUSH)
NOTE 2 - VALVE COVER SHALL BE DOMESTICALLY CAST.
NOTE 3 - COVER MUST HAVE A MINIMUM WEIGHT OF 25 POUNDS.
NOTE 4 - COVER MUST BE CLASS 35 OR GREATER.
NOTE 5 - COVER MUST MEET OR EXCEED AASHTO H-20 LOAD REQUIREMENTS.

CITY OF RALEIGH
DEPARTMENT OF PUBLIC UTILITIES
5 1/4" VALVE BOX DROP LID WITH 4" SKIRT

DWG. NO.	REVISIONS	DATE	REVISIONS	DATE
W-18				

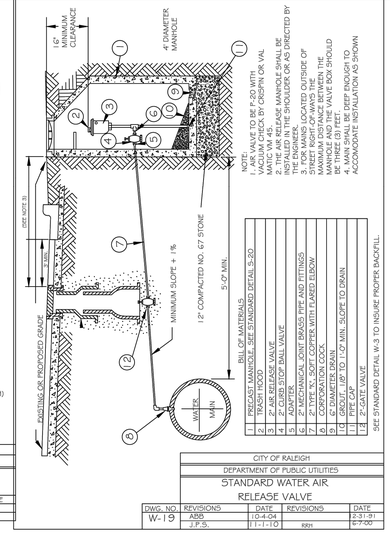

NOTE:
1. VALVE TO BE F-20 WITH VACUUM CHECK BY CRISPIN OR VAL MATIC OR EQUAL.
2. THE AIR RELEASE MANHOLE SHALL BE INSTALLED IN THE SHOULDER OR AS DIRECTED BY THE ENGINEER.
3. FOR MAINS LOCATED OUTSIDE OF STREET PAVEMENT, THE MINIMUM DISTANCE BETWEEN THE MANHOLE AND THE VALVE BOX SHOULD BE 3 FEET OR GREATER.
4. MAIN SHALL BE DEEP ENOUGH TO ACCOMODATE INSTALLATION AS SHOWN

BILL OF MATERIALS

1	PRECAST MANHOLE - SEE STANDARD DETAIL S-20	
2	TRASH HOOD	
3	2" AIR RELEASE VALVE	
4	2" AIR VACUUM VALVE SMALL VALVE	
5	ADAPTER	
6	2" MECHANICAL JOINT BRASS PIPE AND FITTINGS	
7	2" CORPORATION COCK - ADAPTER WITH FLARED END BOW	
8	2" CORPORATION COCK	
9	6" DIAMETER DRAIN	
10	GROUT - 45° TO 1'-0" MIN. SLOPE TO DRAIN	
11	2" GATE VALVE	
12	2" GATE VALVE	

SEE STANDARD DETAIL W-3 TO INSURE PROPER BACKFILL.

CITY OF RALEIGH
DEPARTMENT OF PUBLIC UTILITIES
STANDARD WATER AIR RELEASE VALVE

DWG. NO.	REVISIONS	DATE	REVISIONS	DATE
W-19	ABB	10-4-04		2-21-91
	J.P.S.	11-1-10	RRH	6-7-00

Public
Sewer Collection / Extension System
The City of Raleigh consents to the connection and extension of the City's public sewer system as shown on this plan. The material and Construction methods used for this project shall conform to the standards and specifications of the City's Public Utilities Handbook.

City of Raleigh
Public Utilities Department Permit # S-5071

Authorization to Construct See digital signature

CITY OF RALEIGH - PLANS AUTHORIZED FOR CONSTRUCTION

Plans for the proposed use have been reviewed for general compliance with applicable codes. This limited review, and authorization for construction is not to be considered to represent total compliance with all legal requirements for development and construction. The property owner, design consultants, and contractors are each responsible for compliance with all applicable City, State and Federal laws. This specific authorization below is not a permit, nor shall it be construed to permit any violation of City, State or Federal Law. All Construction must be in accordance with all Local, State, and Federal Rules and Regulations. This approval of this electronic document is only valid if the document has not been modified and the digital signature below is valid:

City of Raleigh Development Approval _____

WithersRavenel
Engineers | Planners
137 S Wilmington Street | Suite 200 | Raleigh, NC 27601 | t: 919.469.3340 | license #: F-1479
www.withersravenel.com

PROJECT # SP 22-02
ROLESVILLE PUBLIC WORKS FACILITY
ROLESVILLE, NORTH CAROLINA

WATER DETAILS

Job No.	02210710.00		
Date	7/1/2022	Drawn By	DBG
Checked By	PED	Designer	PED/DBG

NORTH CAROLINA PROFESSIONAL SEAL 049219 ENGINEER PAUL DEVLIN 7/1/2022

Revisions

Sheet No.
C7.02

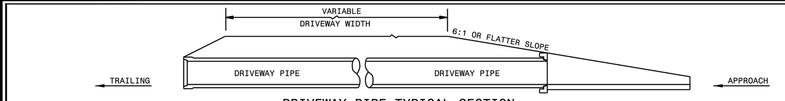

DRIVEWAY PIPE TYPICAL SECTION

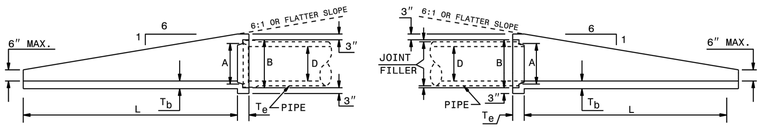

GROOVE INSTALLATION

TONGUE INSTALLATION

SIDE VIEW

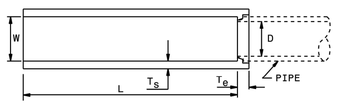

PLAN VIEW

END VIEW

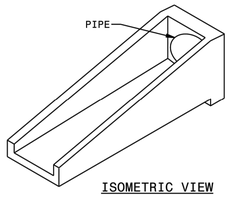

ISOMETRIC VIEW

END TREATMENT DIMENSIONS							
D	L	W	T_s	T_b	T_e	A	B
15"	7'-6"	19"	4"	4"	6"	17¾"	20⅞"
18"	9'-0"	23"	4"	4"	6"	21¼"	25"
24"	12'-6"	30"	4"	4"	6"	27⅞"	32"

NOTES:
1. CONSTRUCT PIPE END SECTION USING #4 REBAR SPACED 9" EACH WAY AND MEET ALL REQUIREMENTS OF STD. SPEC. 310.
2. CHAMFER ALL EXPOSED CORNERS ¾".

STATE OF NORTH CAROLINA
DEPT. OF TRANSPORTATION
DIVISION OF HIGHWAYS
RALEIGH, N.C.

1-18

ROADWAY STANDARD DRAWING FOR
PARALLEL PIPE END SECTION
PRECAST CONCRETE SECTION FOR 15" TO 24" PIPE

SHEET 1 OF 1

310.02

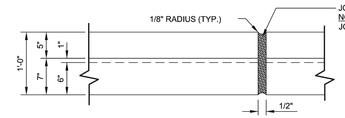

FRONT ELEVATION
TRANSVERSE EXPANSION JOINT

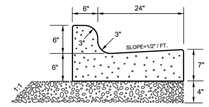

1. 30" CURB & GUTTER

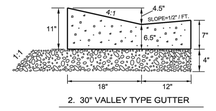

2. 30" VALLEY TYPE GUTTER

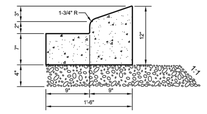

MEDIAN CURB AND GUTTER
SIDE ELEVATION

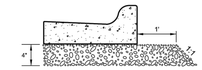

4" COMPACTED A.B.C. UNDER STANDARD CURB & GUTTER (MIN)

NO VALLEY CURB SHALL BE USED AT INTERSECTIONS, HYDRANTS, ETC.

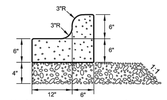

MEDIAN CURB AND GUTTER
(NON-MOUNTABLE)

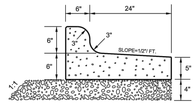

SPILL CURB DETAIL

NOTES:
1. 10' MAXIMUM BETWEEN DUMMY JOINTS. 15' MAXIMUM BETWEEN DUMMY JOINTS ON MACHINE POURS.
2. 1/2" EXPANSION JOINT EVERY 50'.
3. 3000 PSI CONCRETE MINIMUM, 4" SLUMP MAXIMUM.
4. LIQUID MEMBRANE CURING COMPOUND SHALL MEET THE REQUIREMENTS OF SECTION 1026-2 OF NCDOT STANDARDS & SPECIFICATIONS FOR ROADS AND STRUCTURES.
5. ALL CONSTRUCTION JOINTS SHALL BE FILLED WITH JOINT FILLER AND SEALER IN ACCORDANCE WITH NCDOT ROADWAY STANDARD DETAIL 846.01 THE JOINT MATERIAL SHALL CONFORM TO SECTION 1028-2 OF NCDOT STANDARD & SPECIFICATIONS FOR ROADS AND STRUCTURES.
6. REFER TO NCDOT DETAIL 846.01 FOR CURB AND GUTTER SUPERELEVATION RATES.

SHEET 1 OF 2

CITY OF RALEIGH
STANDARD DETAIL

REVISIONS	DATE: 8/1/18	NOT TO SCALE
	CURB AND GUTTER	
	T-10.26.1	

WithersRavenel
Engineers | Planners
137 S Wilmington Street | Suite 200 | Raleigh, NC 27601 | t: 919.469.3340 | license # F-1479
www.withersravenel.com

PROJECT # SP 22-02
ROLESVILLE PUBLIC WORKS FACILITY
ROLESVILLE, NORTH CAROLINA

STORM DRAINAGE DETAILS

Job No. 02210710.00	
Date 7/1/2022	Drawn By DBG
Checked By PED	Designer PED/DBG

Certified Professional Engineer Seal
NORTH CAROLINA PROFESSIONAL SEAL 049219 ENGINEER PAUL DEVLIN
7/1/2022

Revisions

Sheet No.
C7.03

LANDSCAPE LEGEND:

SYMBOL	DESCRIPTION
UPPER-STORY TREES:	
○	QPH - QUERCUS PHELLOS 'HIGHTOWER'
⬡	QUN - QUERCUS NUTTALLI
UNDER-STORY TREES:	
✿	ACA - AMELANCHIER CANADENSIS 'AUTUMN BRILLIANCE'
SHRUBS	
⊛	AZA - AZALEA 'AUTUMN MAJESTY'
▢	CSS - CAMELLIA SASANQUA 'SHISHIGASHIRA'
⊙	DBC - DISTYLIUM 'BLUE CASCADE'
●	GJR - GARDENIA JASMINOIDES 'RADICANS'
✺	OSF -OSMANTHUS FRAGRANS
GROUNDCOVERS	
▭	TIFTUF BERMUDA SOD
BUFFERS	
▦	25' PERIMETER BUFFER
▨	100' STREET BUFFER
⊠	30' STREET BUFFER

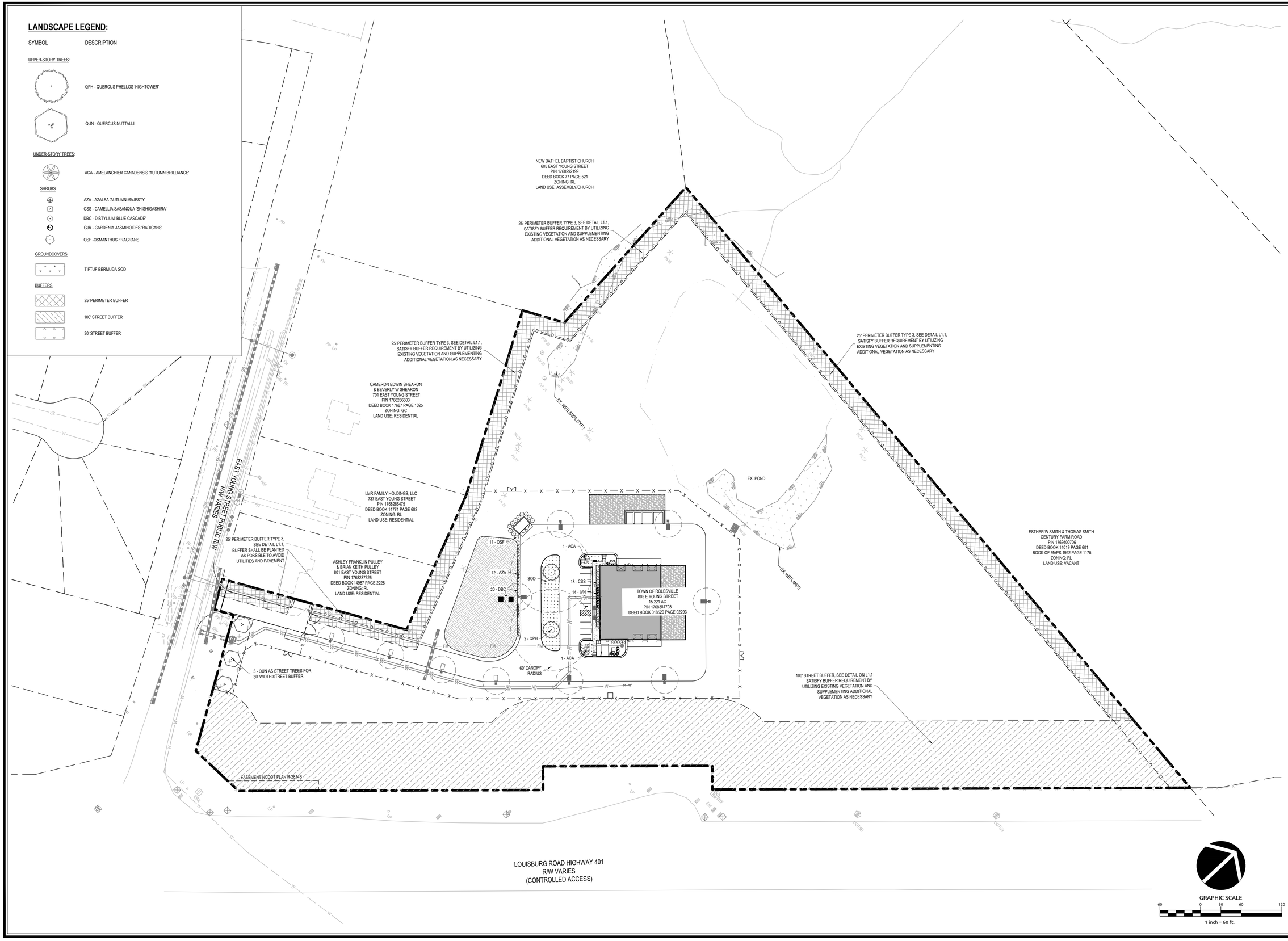

K:\21\21-0710\210710-Rolesville Public Works Facility\CAD\Drawing Sets\Site Plan\L1.0 - Landscape Plan and Detail.dwg- Wednesday, September 21, 2022 10:11:03 AM - PDEVLIN

WithersRavenel
Engineers | Planners
137 S Wilmington Street | Suite 200 | Raleigh, NC 27601 | t: 919.469.3340 | license #: F-1479
www.withersravenel.com

PROJECT # SP 22-02

ROLESVILLE PUBLIC WORKS FACILITY

ROLESVILLE, NORTH CAROLINA

LANDSCAPE PLAN

Job No. 02210710.00	
Date 7/1/2022	Drawn By DBG
Checked By PED	Designer PED/DBG

DocuSigned by:
93C61AC741A4C1...
DANIEL B. WHATLEY
2077
7/1/2022

Revisions

Sheet No.
L1.00

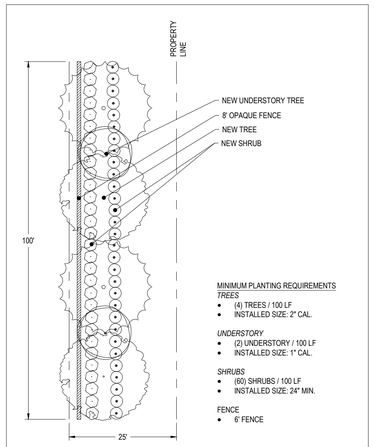

PERIMETER BUFFER TYPE 3
NTS

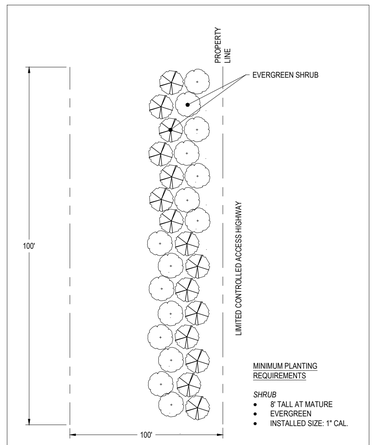

STREET BUFFER ALONG LIMITED CONTROLLED ACCESS HIGHWAYS
NTS

LANDSCAPE NOTES:

1. ALL OPAQUE FENCES (SOLID, WOOD, BRICK, ETC.) MUST INCLUDE AT INSTALLATION EVERGREEN SHRUB PLANTINGS WHICH WILL REACH A MINIMUM HEIGHT OF 3' AT MATURITY AND 5' O.C. ALL PLANTINGS MUST FACE TOWARDS THE PUBLIC RIGHT-OF-WAY.
2. IF EXISTING SIGNIFICANT VEGETATION AND OTHER SITE FEATURES DO NOT FULLY MEET THE STANDARDS FOR THE TYPE OF BUFFER REQUIRED, THEN ADDITIONAL VEGETATION AND / OR SITE FEATURES (INCLUDING FENCES) SHALL BE PLANTED OR INSTALLED WITHIN THE REQUIRED BUFFER AREA.
3. ALL LARGE TREES WHICH THIS SECTION REQUIRES TO BE PLANTED SHALL BE AT LEAST 8' IN HEIGHT ABOVE GROUND LEVEL AND AT LEAST 2-½" CALIPER AT THE TIME OF INSTALLATION AND SHALL HAVE AN EXPECTED MATURE HEIGHT OF AT LEAST 30'.
4. ALL SMALL ORNAMENTAL TYPE TREES SHALL BE AT LEAST 8' ABOVE GROUND LEVEL AND AT LEAST 1-½" CALIPER AT INSTALLATION AND SHALL HAVE AN EXPECTED MATURE HEIGHT AT TIME OF PLANTING AND SHALL REACH THE HEIGHT REQUIRED FOR PERFORMANCE WITHIN (3) YEARS OF INSTALLATION.
5. THE STANDARDS FOR ALL TREES AND SHRUBS IN THE BUFFER, INCLUDING THE MINIMUM HEIGHT, ROOT BALL SIZE, NUMBER OF BRANCHES, AND WIDTH SHALL CONFORM WITH THE AMERICAN STANDARD FOR NURSERY STOCK PUBLISHED BY THE AMERICAN ASSOCIATION OF NURSERYMEN FOR THAT TYPE OF TREE OR SHRUB AT THE TIME OF INSTALLATION.
6. THE REQUIRED BUFFER SHALL NOT CONTAIN ANY DEVELOPMENT, IMPERVIOUS SURFACES OR SITE FEATURES THAT DO NOT FUNCTION TO MEET THE STANDARDS OF THIS SECTION OR THAT REQUIRE REMOVAL OR EXISTING VEGETATION. NO GRADING DEVELOPMENT OR LAND DISTURBING ACTIVITIES SHALL OCCUR WITHIN THE BUFFER UNLESS APPROVED BY THE TOWN STAFF AND THE PLANNING BOARD AT THE TIME OF SITE PLAN OR SUBDIVISION PLAN REVIEW.
7. NOTHING SHALL BE PLANTED OR INSTALLED WITHIN AN UNDERGROUND OR OVERHEAD UTILITY EASEMENT OR DRAINAGE EASEMENT WITHOUT THE CONSENT OF THE TOWN AND THE EASEMENT HOLDER AT THE TIME OF A SITE PLAN OR SUBDIVISION PLAN APPROVAL.

INSTALLATION, INSPECTIONS AND MAINTENANCE:

1. ALL LANDSCAPING, INCLUDING MULCHING AND SEEDING, SHALL BE COMPLETED IN ACCORDANCE WITH THE APPROVED SITE OR SUBDIVISION PLAN AND BE IN COMPLIANCE WITH THE STANDARDS SET FORTH IN THIS SECTION, PRIOR TO ISSUANCE OF A CERTIFICATE OF OCCUPANCY FOR THE SITE OR RECORDING OF A FINAL SUBDIVISION PLAT.
2. THE TOWN STAFF MAY GRANT EXCEPTIONS AND EXTENSIONS TO THE TIME LIMITS UNDER NOTED ORDINANCE CONDITIONS IN SECTION 14.10.
3. WAKE COUNTY INSPECTORS, IN COORDINATION WITH THE TOWN STAFF, SHALL INSPECT THE SITE ONE YEAR AFTER THE ISSUANCE OF A PERMANENT CERTIFICATE OF OCCUPANCY OR RECORDING OF THE FINAL SUBDIVISION PLAT IN ORDER TO ENSURE COMPLIANCE WITH THE APPROVED SITE PLAN OR SUBDIVISION PLAN AND TO ENSURE THAT THE LANDSCAPE IS PROPERLY MAINTAINED.
4. THE DISTURBANCE OF ANY LANDSCAPE AREA OR VEGETATION REQUIRED BY THE TOWN ORDINANCE SHALL CONSTITUTE A VIOLATION OF THE SITE PLAN OR SUBDIVISION PLAN. ALL DISTURBED LANDSCAPED AREAS AND VEGETATION SHALL BE REPLANTED SO AS TO MEET THE STANDARDS AS WELL AS THE APPROVED SITE PLAN OR SUBDIVISION PLAN.

PLANT SCHEDULE

QTY	KEY	BOTANICAL NAME	COMMON NAME	ROOT	SIZE	HEIGHT	NOTES
CANOPY TREES							
2	QPH	Quercus phellos	Willow Oak	B&B	2" CAL. MIN.	10' HT. MIN	MATCHED
3	QUN	Quercus nuttallii	Nuttall Oak	B&B	3" CAL. MIN.	10' HT. MIN	MATCHED
UNDERSTORY TREES							
2	ACA	Amelancier canadensis 'Autumn Brilliance'	Serviceberry	B&B	2" CAL. MIN.	8' HT. MIN	MATCHED
SHRUBS							
12	AZA	Azalea 'Autumn Majesty'	Enocre Azalea spp.	CONT.		24" Ht. MIN.	MATCHED
18	CSS	Camellia sasanqua 'Shishigashira'	Dwarf Camellia	CONT.		24" Ht. MIN.	MATCHED
20	DBC	Distylium 'Blue Cascade'	Distylium	CONT.		24" Ht. MIN.	MATCHED
14	IVN	Ilex vomitoria 'Nana'	Dwarf Yaupon Holly	CONT.		24" Ht. MIN.	MATCHED
11	OSF	Osmanthus fragrans	Tea Olive	CONT.		24" Ht. MIN.	MATCHED
GROUNDCOVER							
4,300 SF		Cynodon dactylon	Tif Tuf Bermuda	SOD			

WithersRavenel
Engineers | Planners
137 S Wilmington Street | Suite 200 | Raleigh, NC 27601 | t: 919.469.3340 | license #: F-1479
www.witherseravenel.com

PROJECT # SP 22-02
ROLESVILLE PUBLIC WORKS FACILITY
ROLESVILLE, NORTH CAROLINA

LANDSCAPE DETAILS

Job No. 02210710.00	
Date 7/1/2022	Drawn By DBG
Checked By PED	Designer PED/DBG

NORTH CAROLINA PROFESSIONAL SEAL C-0741 ARCHITECTURE 2077 DANIEL B. WHATLEY 7/1/2022

Revisions

Sheet No.
L1.01

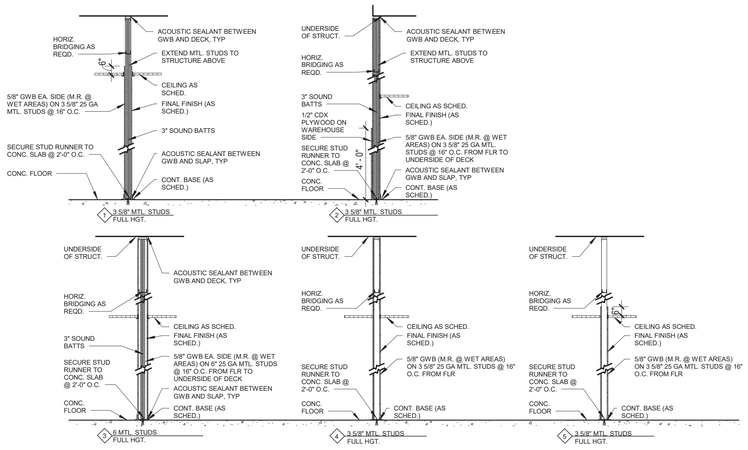

3 PARTITION TYPES
A101 SCALE: 1/4" = 1'-0"

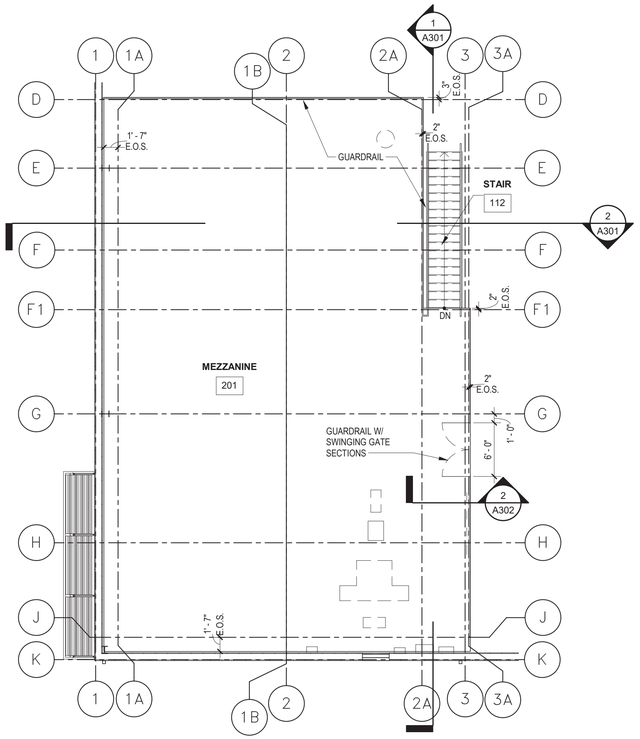

2 MEZZANINE
A101 SCALE: 1/8" = 1'-0"

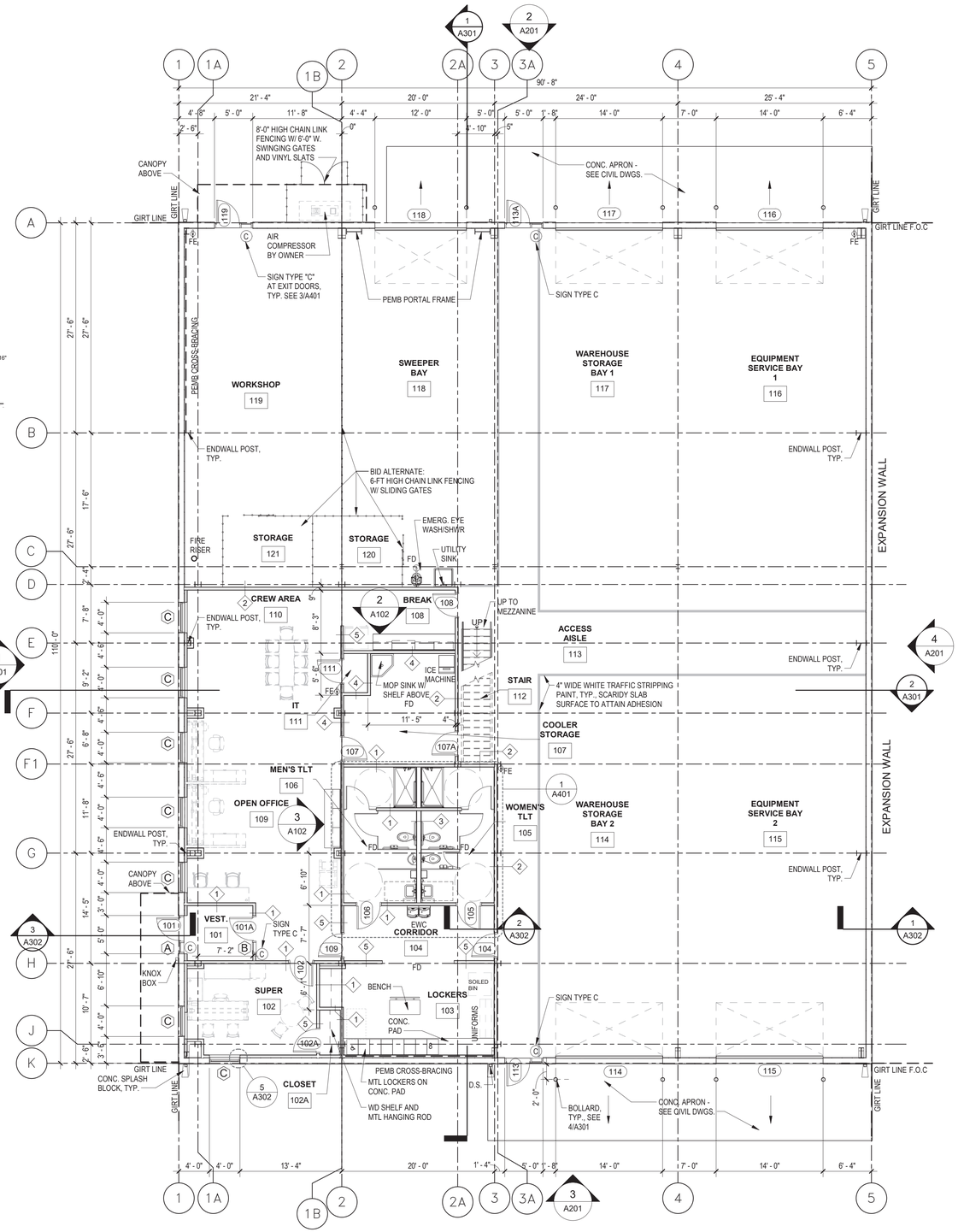

1 FLOOR PLAN
A101 SCALE: 1/8" = 1'-0"

GENERAL NOTES

1. MAIN BUILDING IS PRE-ENGINEERING METAL BUILDING.
2. MEZZANINE STRUCTURAL STEEL FRAME IS INDEPENDANT OF METAL BUILDING.
3. ALL INDICATED FURNITURE IS BY OWNER AND IS NOT PART OF THE CONSTRUCTION SCOPE.
4. ALL BREAK ROOM AND OFFICE APPLIANCES ARE BY OWNER.
5. ALL DIMENSIONS ARE TO FINISH FACE, OR TO CENTER LINE OF COLUMN, UNLESS NOTED OTHERWISE.
6. OWNER WILL PROVIDE AND INSTALL: TRASH & RECYCLE BINS; FURNITURE, FIXTURES & EQUIPMENT; BREAK RM APPLIANCES; IT, AV, AND SECURITY SYSTEM CABLING, FACEPLATES & EQUIPMENT;
7. SEE CIVIL DRAWINGS FOR SIDEWALKS, PAVEMENT, & EQUIPMENT PADS.
8. WHERE MONITOR'S, MILLWORK, AND OTHER WALL MOUNTED EQUIPMENT ARE SHOWN, CONTRACTOR TO PROVIDE ADEQUATE BLOCKING FOR EQUIPMENT, WHETHER IN ITEMS ARE IN CONTRACT OR N.I.C.
9. FIRE RATED OR SOUND BARRIER PARTITIONS TO BE CONSTRUCTED TIGHT TO STRUCTURE, PIPING, DUCTWORK, AND OTHER PENETRATIONS.
10. FE = FIRE EXTINGUISHER ON HANGING BRACKET

NOTES- PARTITION TYPES

1. PROVIDE MOISTURE-RESISTANT GWB @ WET LOCATIONS (SINKS, TOILETS, LAVS, KITCHEN, MOP SINK, ICE MACHINE)
2. PROVIDE 8'-0" HIGH FRP PANEL OVER GWB BEHIND ALL MOP SINKS. EXTEND 2'-0" BEYOND EDGE OF FIXTURE ON BOTH SIDES & INSTALL TRIM ALL EDGES.
3. WHERE STUD TRACKS ARE ANCHORED TO ROOF OR FLOOR CONSTRUCTION ABOVE, PROVIDE FOR ACHORAGE TO DECK WITH VERTICAL DEEP-LEG DEFLECTION TRACK. FASTEN TO DECK WITH 2 #12 SCREWS @ 12" O.C.

FINISH NOTES

1. SEE SPEC SECTION 09 06 00 SCHEDULE FOR FINISHES.
2. PAINT ALL EXPOSED GYPSUM WALL BOARD (GWB).
3. PLYWOOD FACING SERVICE, STORAGE & SHOP BAYS IS TO REMAIN UNPAINTED.
4. ALL GWB WITHIN ADMINISTRATION AREA TO HAVE RESILIENT WALL BASE.
5. BASE BID: LVT THROUGHOUT OFFICE ADMIN, LOCKER RM, AND TOILET AREA, DENSIFIER IN SERVICE, STORAGE & SHOP BAYS AS INDICATED IN SECTION 09 06 00. MEZZANINE IS SEALED CONCRETE.
6. BID ALTERNATE: ADD RESINOUS FLOORING IN AREAS INDICATED IN SECTION 09 06 00 IN LIEU OF LVT.
7. FIELD PAINT ALL HM DOORS AND FRAMES, INTERIOR AND EXTERIOR.
8. FIELD PAINT ALL GUARDRAILS AND HANDRAILS AND EXPOSED METAL STAIR COMPONENTS.
9. FIELD PAINT ALL EXPOSED MEZZANINE FRAMING STEEL WITHIN ADMINISTRATION AREA AND WHERE EXPOSED TO SERVICE, STORAGE & SHOP BAYS. ALL OTHER EXPOSED FRAMING STEEL, INCLUDING PEMB COMPONENTS ARE TO REMAIN AS SHOP PRIMED.
10. SURFACE MOUNTED CONDUIT AND J-BOXES ARE TO BE PAINTED TO MATCH WALL WHEN MOUTED ON GWB.

LEGEND

- FIRE EXTINGUISHER ON BRACKET
- SIGN TYPE
- STOREFRONT TYPE

CLIENT

Rolesville
Genuine Community • Capital Connection
Est. 1837

ISSUES

ISSUE	ISSUANCE	DATE
A	SD PHASE PRICING PACKAGE	12/10/2021
B	OWNER REVIEW SET	05/05/2022
0	BUILDING PERMIT & BID SET	07/01/2022

KEYPLAN

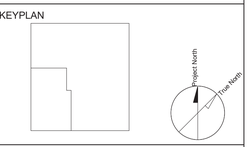

CONSULTANTS

WITHERS RAVENEL
WithersRavenel
Engineers | Planners | Surveyors

SEAL

PRIME CONSULTANT

IBI GROUP
421 Fayetteville Street, Suite 1609
Raleigh, NC 27601, USA
tel 919 851 4211
ibigroup.com

PROJECT
ROLESVILLE PUBLIC WORKS
805 E. YOUNG STREET
ROLESVILLE NC

PROJECT NO: 135941	
DRAWN BY: ST,CM	CHECKED BY: CM
PROJECT MGR: MH	APPROVED BY: MH
SCALE: As indicated	DATE: 07/01/2022

SHEET TITLE
FLOOR PLANS AND PARTITION TYPES

SHEET NUMBER A101
ISSUE 0

BIM 360://135941-Rolesville_Public_Works R2020/135941-Rolesville-ARCH_v20.rvt

SCALE CHECK 1 in 10mm

2022-09-26 4:22:10 PM

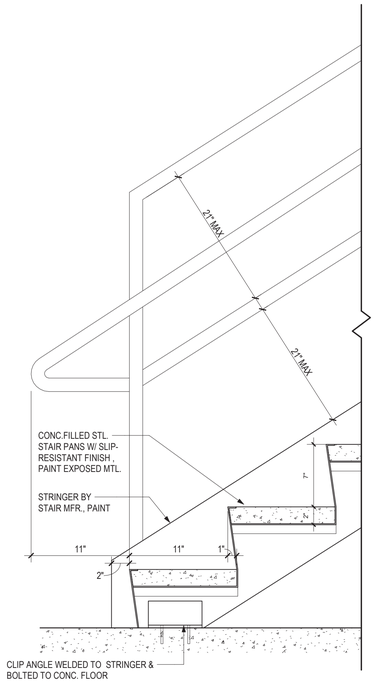

6 A102 STAIR - LWR FLR

SCALE: 1 1/2" = 1'-0"

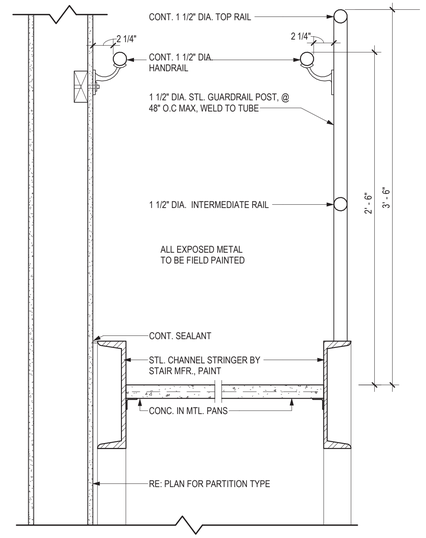

5 A102 STAIR - CROSS-SECTION

SCALE: 1 1/2" = 1'-0"

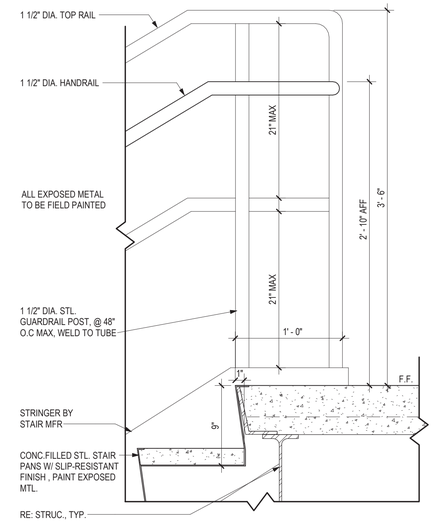

4 A102 STAIR - UPPER LNDG

SCALE: 1 1/2" = 1'-0"

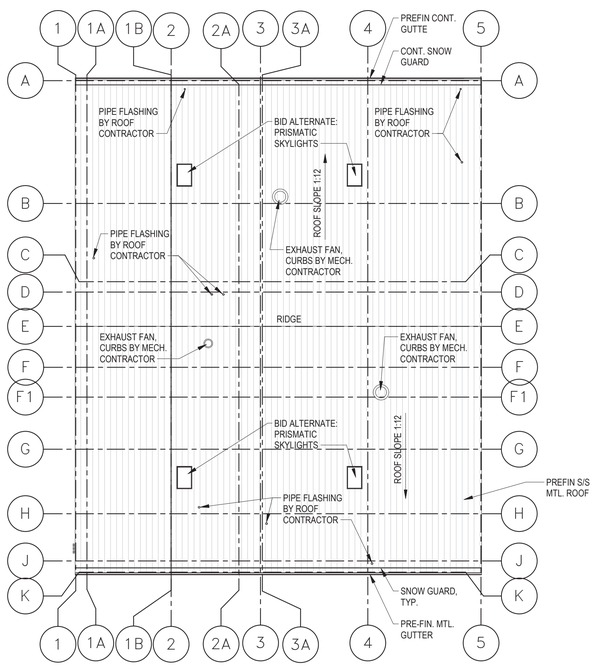

7 A102 ROOF PLAN

SCALE: 1/16" = 1'-0"

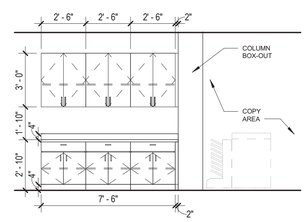

3 A102 COPY AREA

SCALE: 1/4" = 1'-0"

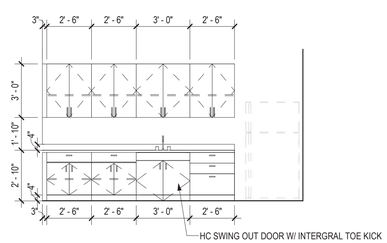

2 A102 BREAK

SCALE: 1/4" = 1'-0"

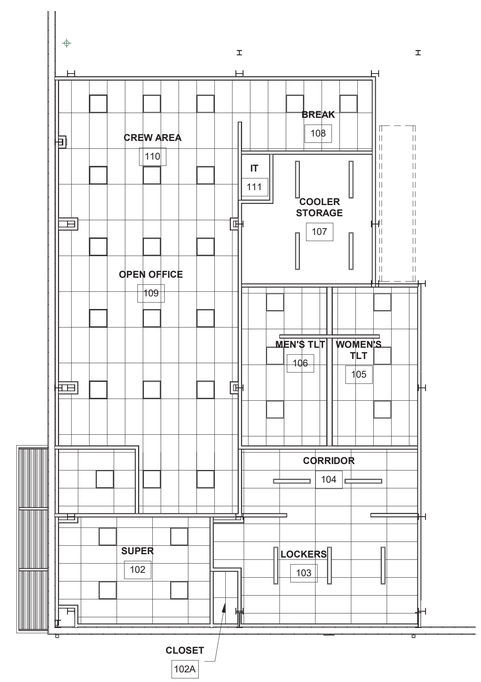

1 A102 REFLECTED CEILING PLAN

SCALE: 1/8" = 1'-0"

NOTES- REFLECTED CEILING PLAN

1. CEILING HEIGHT IS 8'-10" A.F.F. UNLESS NOTED OTHERWISE
2. TILES ARE TO BE CENTERED IN OFFICES AND ON HALLWAYS/ CORRIDORS. EACH SPACE TO BE SYMMETRICALLY CUT AT WALL UNLESS OTHERWISE NOTED. IF TILE GRID ADJACENT TO WALL IS LESS THAN 6" CUT TILE TO FIT GRID
3. SEE ELECTRICAL DWGS FOR ALL LIGHTING, FIXTURE COUNTS, EMERGENCY LIGHTS AND FIRE ALARM DEVICES.
4. ALL LIGHT FIXTURE TRIM RINGS, EXPOSED CONDUITS, J-BOXES, SPEAKERS, GRILLES AND HVAC GRILLES (LAY-IN AND GYP. BD. CLGS SHALL BE FINISHED TO MATCH ADJACENT CLG FINISH, U.N.O.
5. SEE MECHANICAL DWGS FOR ALL DIFFUSERS, DUCTS, VENTS AND RETURN AIR GRILLE LOCATIONS
6. CENTER SPRINKLER HEADS IN TILES

LEGEND- REFLECTED CEILING PLAN

ACT-1
SUSPENDED GRID W/ ACOUSTICAL CEILING TILE, RE: SCHED. & SPECS.

2'-0" X 2'-0" LIGHT FIXTURE

4'-0" LINEAR LIGHT

CLIENT

Rolesville
Genuine Community • Capital Connection
Est. 1837

ISSUES

ISSUE	ISSUANCE	DATE
A	SD PHASE PRICING PACKAGE	12/10/2021
B	OWNER REVIEW SET	05/05/2022
0	BUILDING PERMIT & BID SET	07/01/2022

Project North
True North

CONSULTANTS

WITHERS RAVENEL

WithersRavenel
Engineers | Planners | Surveyors

SEAL

MARK A. HUMLENNY
REGISTERED ARCHITECT
6741
7-01-2022
NORTH CAROLINA
RALEIGH, N.C.

PRIME CONSULTANT

IBI GROUP
421 Fayetteville Street, Suite 1609
Raleigh, NC 27601, USA
tel 919 851 4211
ibigroup.com

PROJECT

ROLESVILLE PUBLIC WORKS

805 E. YOUNG STREET
ROLESVILLE NC

PROJECT NO: 135941	
DRAWN BY: CM	CHECKED BY: ST
PROJECT MGR: MH	APPROVED BY: MH
SCALE: As indicated	DATE: 07/01/2022

SHEET TITLE

RCP, INTERIOR ELEVATIONS, STAIR DETAILS, ROOF PLAN & FINISH NOTES

SHEET NUMBER A102

ISSUE 0

BIM 360://135941-Rolesville_Public_Works R2020/135941-Rolesville-ARCH_v20.rvt

SCALE CHECK 1 in 10mm

2022-09-15 10:45:14 AM

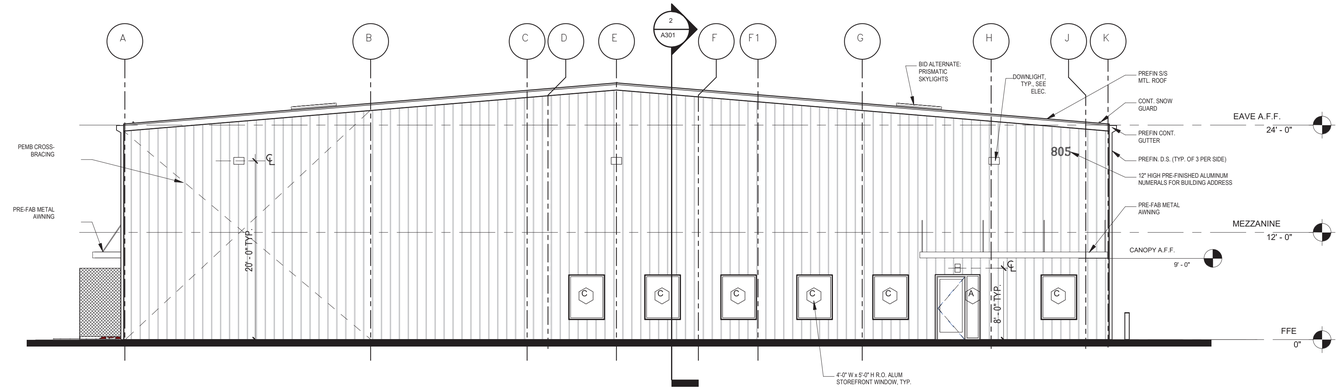

1 A201 WEST ELEVATION

SCALE: 1/8" = 1'-0"

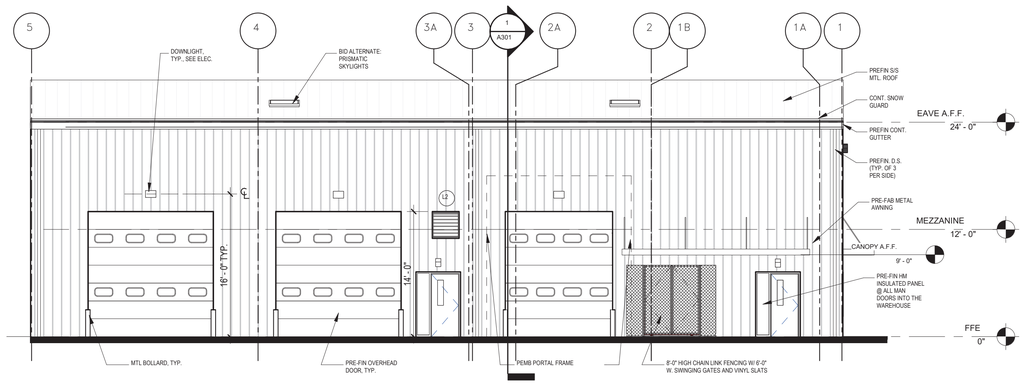

2 A201 NORTH ELEVATION

SCALE: 1/8" = 1'-0"

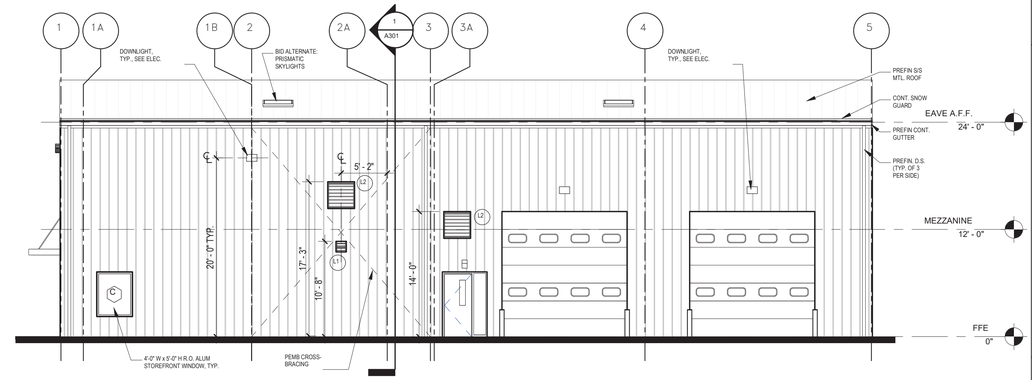

3 A201 SOUTH ELEVATION

SCALE: 1/8" = 1'-0"

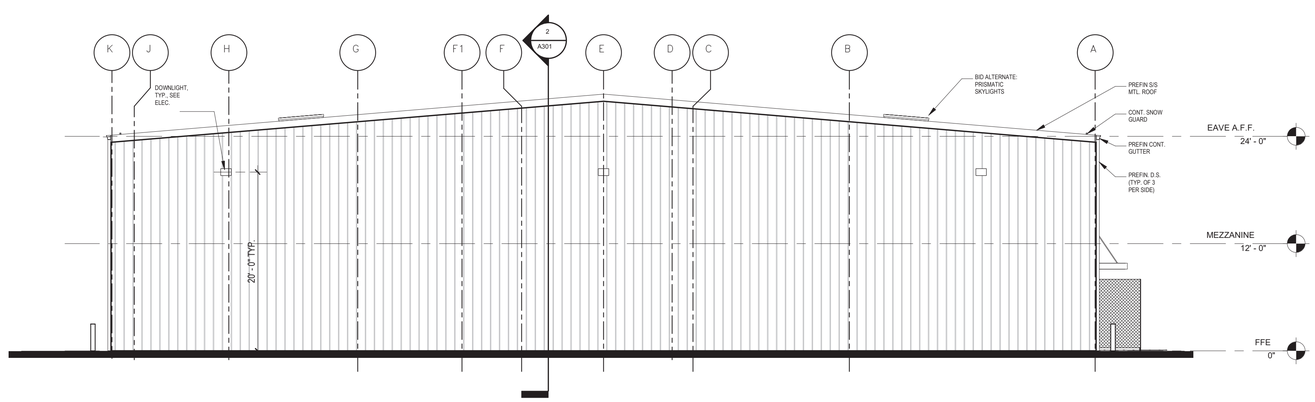

4 A201 EAST ELEVATION

SCALE: 1/8" = 1'-0"

CLIENT

Rolesville
Genuine Community • Capital Connection
Est. 1837

ISSUES

ISSUE	ISSUANCE	DATE
A	SD PHASE PRICING PACKAGE	12/10/2021
B	OWNER REVIEW SET	05/05/2022
0	BUILDING PERMIT & BID SET	07/01/2022

CONSULTANTS

WITHERS RAVENEL

WithersRavenel
Engineers | Planners | Surveyors

SEAL

MARK A. HUMIENNY
REGISTERED ARCHITECT
6741
7-01-2022
NORTH CAROLINA
RALEIGH, N.C.

PRIME CONSULTANT

IBI

IBI GROUP
421 Fayetteville Street, Suite 1609
Raleigh, NC 27601, USA
tel 919 851 4211
ibigroup.com

PROJECT

ROLESVILLE PUBLIC WORKS

805 E. YOUNG STREET
ROLESVILLE NC

PROJECT NO:
135941

DRAWN BY:	CHECKED BY:
CM	ST
PROJECT MGR:	APPROVED BY:
MH	MH
SCALE: 1/8" = 1'-0"	DATE: 07/01/2022

SHEET TITLE

ELEVATIONS

SHEET NUMBER A201

ISSUE 0

BIM 360://135941-Rolesville_Public_Works R2020/135941-Rolesville-ARCH_v20.rvt

2022-09-14 6:56:28 PM

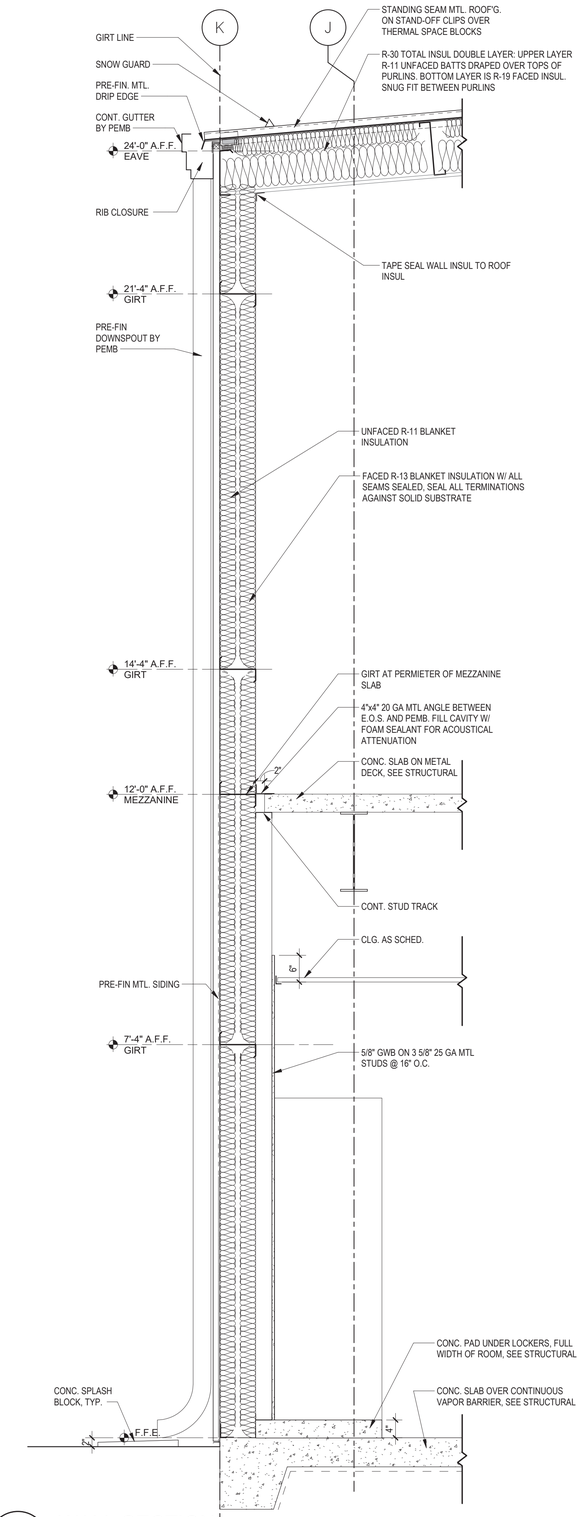

3 A301 WALL SECTION
SCALE: 3/4" = 1'-0"

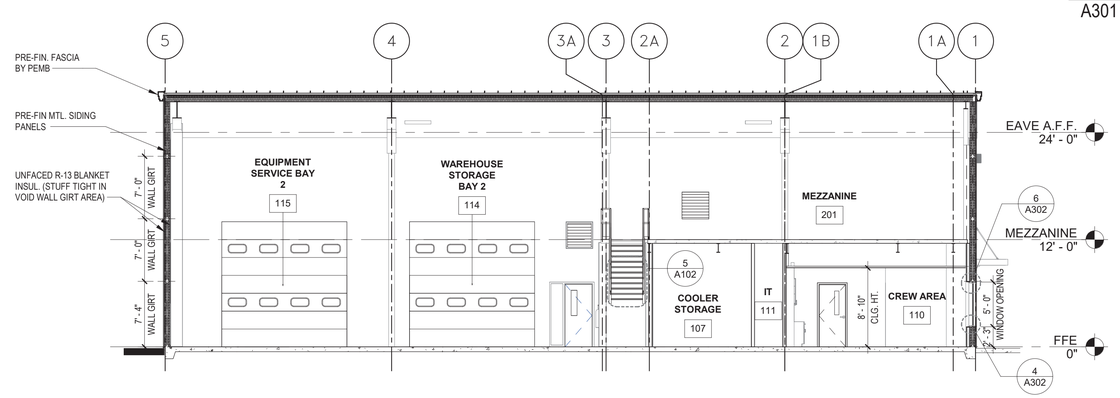

2 A301 BUILDING CROSS SECTION 2
SCALE: 1/8" = 1'-0"

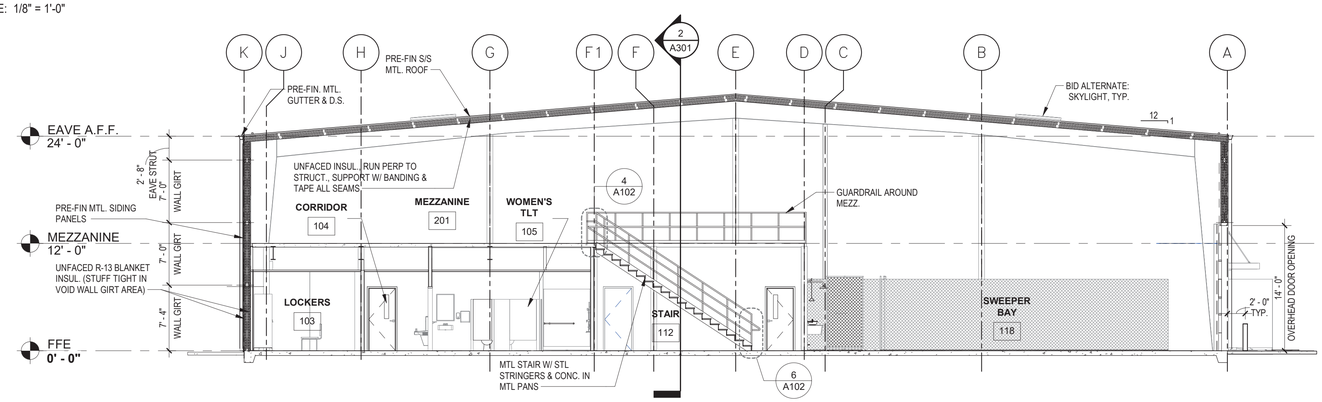

1 A301 BUILDING CROSS SECTION 1
SCALE: 1/8" = 1'-0"

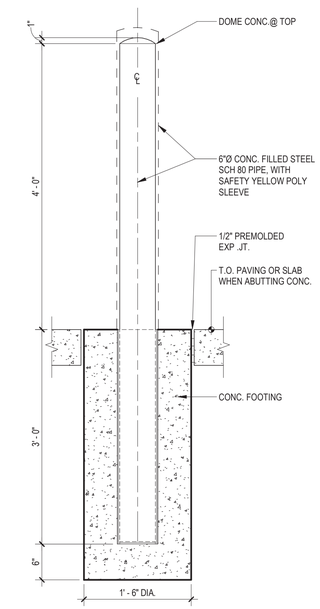

4 A301 BOLLARD DETAIL
SCALE: 1" = 1'-0"

CLIENT

Rolesville
Genuine Community • Capital Connection
Est. 1837

ISSUES

ISSUE	ISSUANCE	DATE
A	SD PHASE PRICING PACKAGE	12/10/2021
B	OWNER REVIEW SET	05/05/2022
0	BUILDING PERMIT & BID SET	07/01/2022

CONSULTANTS

WITHERS RAVENEL

WithersRavenel
Engineers | Planners | Surveyors

SEAL

MARK A. HUMIENNY
REGISTERED ARCHITECT
6741
7-01-2022
NORTH CAROLINA
RALEIGH, N.C.

PRIME CONSULTANT

IBI GROUP
421 Fayetteville Street, Suite 1609
Raleigh, NC 27601, USA
tel 919 851 4211
ibigroup.com

PROJECT

ROLESVILLE PUBLIC WORKS

805 E. YOUNG STREET
ROLESVILLE NC

PROJECT NO: 135941	
DRAWN BY: CM	CHECKED BY: ST
PROJECT MGR: MH	APPROVED BY: MH
SCALE: As indicated	DATE: 07/01/2022

SHEET TITLE

WALL SECTIONS and DETAILS

SHEET NUMBER A301

ISSUE 0

2022-09-26 4:22:11 PM

BIM 360://135941-Rolesville_Public_Works R2020/135941-Rolesville-ARCH_v20.rvt

SCALE CHECK 1 in 1 foot

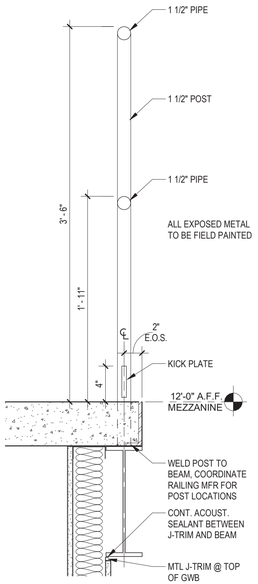

7 A302 MEZZANINE RAILING, TYP.

SCALE: 1 1/2" = 1'-0"

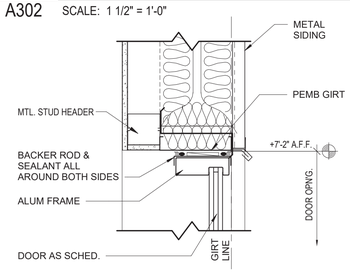

6 A302 WINDOW HEAD ALUM

SCALE: 1 1/2" = 1'-0"

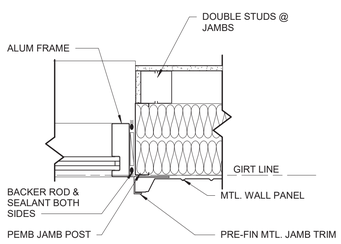

5 A302 WINDOW JAMB ALUM

SCALE: 1 1/2" = 1'-0"

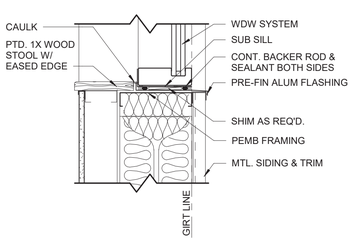

4 A302 WDW SILL ALUM

SCALE: 1 1/2" = 1'-0"

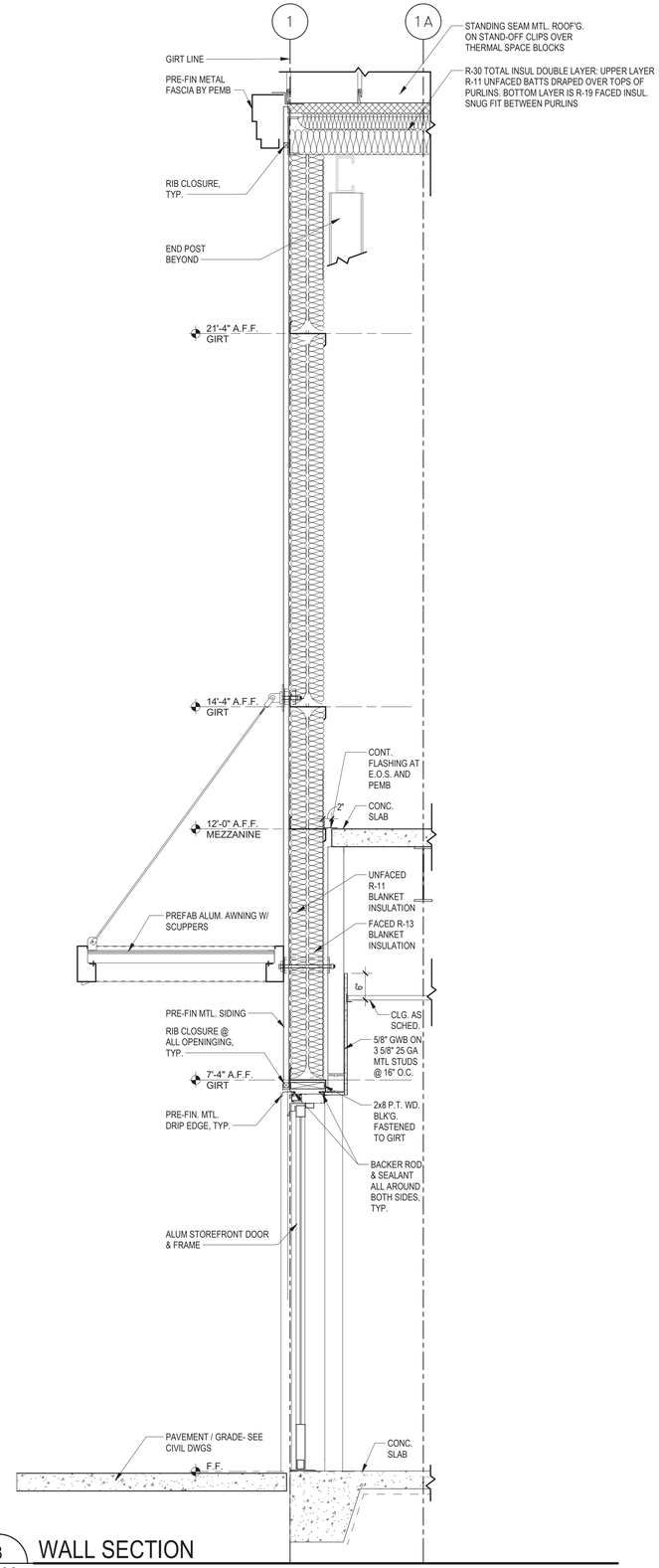

3 A302 WALL SECTION

SCALE: 3/4" = 1'-0"

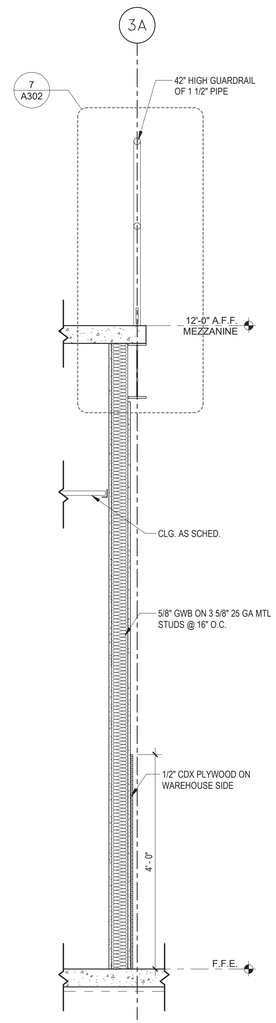

2 A302 WALL SECTION

SCALE: 3/4" = 1'-0"

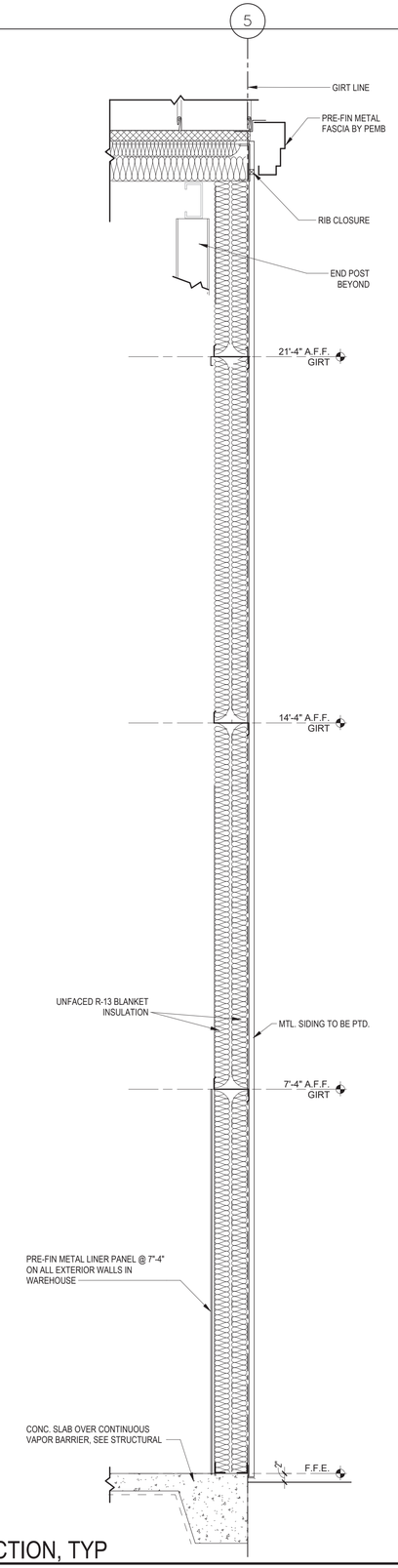

1 A302 WALL SECTION, TYP

SCALE: 3/4" = 1'-0"

CLIENT

Rolesville
Genuine Community • Capital Connection
Est. 1837

ISSUES

ISSUE	ISSUANCE	DATE
A	SD PHASE PRICING PACKAGE	12/10/2021
B	OWNER REVIEW SET	05/05/2022
0	BUILDING PERMIT & BID SET	07/01/2022

CONSULTANTS

WITHERS RAVENEL

WithersRavenel
Engineers | Planners | Surveyors

SEAL

MARK A. HUMIENNY
REGISTERED ARCHITECT
6741
7-01-2022
NORTH CAROLINA
RALEIGH, N.C.

PRIME CONSULTANT

IBI

IBI GROUP
421 Fayetteville Street, Suite 1609
Raleigh, NC 27601, USA
tel 919 851 4211
ibigroup.com

PROJECT

ROLESVILLE PUBLIC WORKS

805 E. YOUNG STREET
ROLESVILLE NC

PROJECT NO: 135941	
DRAWN BY: CM	CHECKED BY: ST
PROJECT MGR: MH	APPROVED BY: MH
SCALE: As indicated	DATE: 07/01/2022

SHEET TITLE

WALL SECTIONS

SHEET NUMBER A302

ISSUE 0

BIM 360://135941-Rolesville_Public_Works R2020/135941-Rolesville-ARCH_v20.rvt

SCALE CHECK: 1 in 10mm

2022-09-26 4:22:12 PM

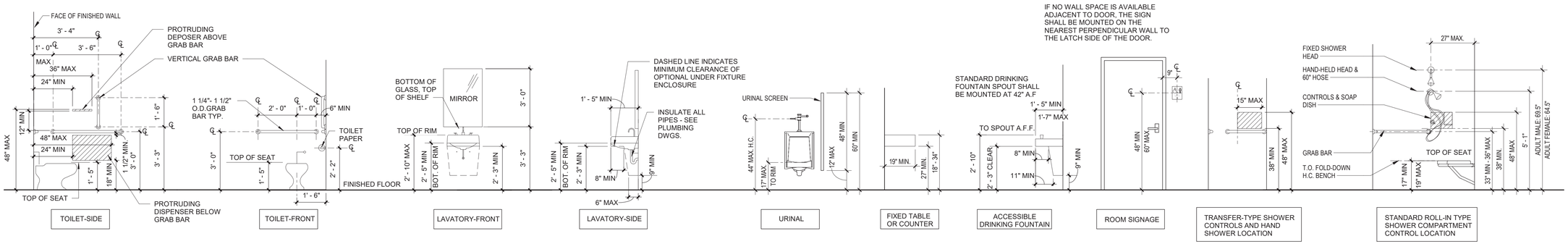

MOUNTING HEIGHTS SHALL BE SO LOCATED THAT THE OPERATIVE PORTION (I.E. PUSH KNOB, TOWEL SLOT, COIN SLOT, ETC...) IS NO HIGHER THAN 48" FROM THE FINISHED FLOOR.

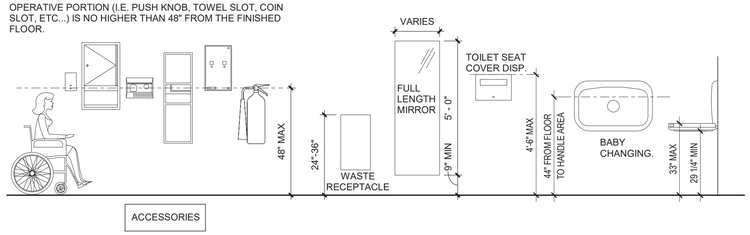

4 TYP MOUNTING HEIGHTS

A401 SCALE: 3/8" = 1'-0"

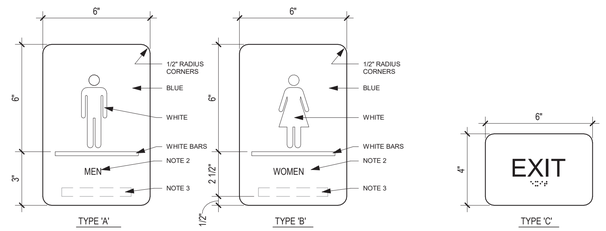

1. 6" MIN. BORDER DIM- MALE/FEMALE FIGURES.
2. RAISED NUMBERS AND CAPITAL LETTERS - 1/32" PROJECTION ALL CHARACTEERS IN EGGSHELL, MATTE, OR NON-GLARE WHITE FINISH.
3. GRADE 2 BRAILLE.
4. PROVIDE COLOR CONTRAST BETWEEN CHARACTERS AND BACKGROUND.

3 SIGNAGE

A401 SCALE: 3" = 1'-0"

TOILET ACCESSORY SCHEDULE

MARK	ITEM DESCRIPTION	NOTES
1	42"L GRAB BAR	
2	36"L GRAB BAR	
3	36X42 GRAB BAR	
4	MOP RACK & SHELF	IN ROOM 107
5	DOUBLE ROLL TOILET TISSUE HOLDER	
6	SOAP DISPENSER	
7	24X36 MIRROR	
8	SANITARY NAPKIN HOLDER DISPOSAL	
9	SHELF	
10	PAPER TOWEL DISPENSER & WASTE RECEPTACLE	
11	ROBE HOOK	
12	18" VERTICAL GRAB BAR	

NOTE: GRAB BARS, CURTAIN ROD, AND SHOWER CURTAIN ARE FURNISHED WITH THE SHOWER FIXTURE, SEE PLUMBING

2 TOILET LEGEND

A401 SCALE: 3/8" = 1'-0"

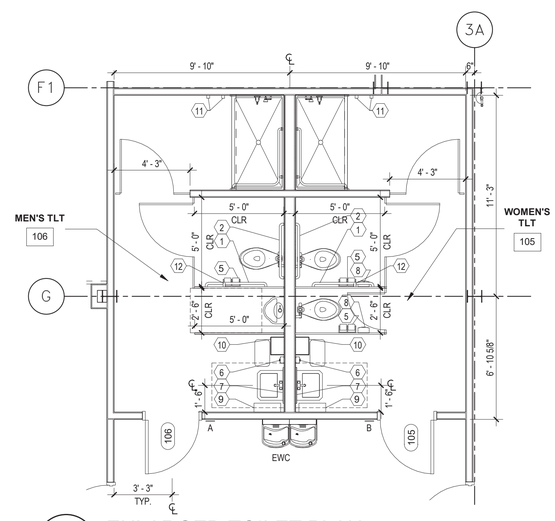

1 ENLARGED TOILET PLAN

A401 SCALE: 1/4" = 1'-0"

CLIENT

Rolesville
Genuine Community • Capital Connection
Est. 1837

ISSUES

ISSUE	ISSUANCE	DATE
A	SD PHASE PRICING PACKAGE	12/10/2021
B	OWNER REVIEW SET	05/05/2022
0	BUILDING PERMIT & BID SET	07/01/2022

KEYPLAN

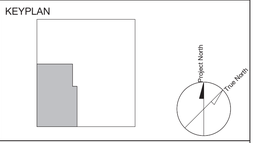

CONSULTANTS

WITHERS RAVENEL

WithersRavenel
Engineers | Planners | Surveyors

SEAL

PRIME CONSULTANT

IBI GROUP
421 Fayetteville Street, Suite 1609
Raleigh, NC 27601, USA
tel 919 851 4211
ibigroup.com

PROJECT

ROLESVILLE PUBLIC WORKS

805 E. YOUNG STREET
ROLESVILLE NC

PROJECT NO: 135941	
DRAWN BY: ST,CM	CHECKED BY: ST
PROJECT MGR: MH	APPROVED BY: MH
SCALE: As indicated	DATE: 07/01/2022

SHEET TITLE

ENLARGED TOILET PLANS AND DETAILS

SHEET NUMBER A401

ISSUE 0

BIM 360://135941-Rolesville_Public_Works R2020/135941-Rolesville-ARCH_v20.rvt

SCALE CHECK 1 in | 10mm

2022-09-23 1:24:07 PM

DOOR SCHEDULE

DOOR NUMBER	ROOM NAME	DOOR SIZE WIDTH	DOOR SIZE HEIGHT	DOOR TYPE	DOOR MATERIAL	FRAME TYPE	FRAME MATERIAL	HDWR SET	DOOR NOTES	DOOR DETAILS HEAD	DOOR DETAILS JAMB	DOOR DETAILS SILL
101	VESTIBULE	3' - 0"	7' - 0"	ALE	ALUM	A	ALUM	1	1	DH2	DJ2	DS2
101A	VESTIBULE	3' - 0"	7' - 0"	ALI	ALUM	B	ALUM	2		DH1	DJ1	DS1
102	SUPERVISOR	3' - 0"	7' - 0"	NL	HM	F1	HM	4		DH1	DJ1	DS1
102A	CLOSET	3' - 0"	7' - 0"	F	HM	F1	HM	9		DH1	DJ1	DS1
104	COORIDOR	3' - 0"	7' - 0"	NL	HM	F1	HM	6	2,3	DH1	DJ1	DS1
105	WOMEN'S TLT	3' - 0"	7' - 0"	F	HM	F1	HM	7		DH2	DJ1	DS1
106	MEN'S TLT	3' - 0"	7' - 0"	F	HM	F1	HM	7		DH1	DJ1	DS1
107	COOLER STORAGE	3' - 0"	7' - 0"	F	HM	F1	HM	5		DH1	DJ1	DS1
107A	COOLER STORAGE	3' - 0"	7' - 0"	F	HM	F1	HM	11	2,3	DH1	DJ1	DS1
108	BREAK	3' - 0"	7' - 0"	NL	HM	F1	HM	6	2,3	DH1	DJ1	DS1
109	OPEN OFFICE	3' - 0"	7' - 0"	NL	HM	F1	HM	10		DH1	DJ1	DS1
111	IT	3' - 0"	7' - 0"	L	WD	F1	HM	8	2	DH1	DJ1	DS1
113	AISLE ACCESS	3' - 0"	7' - 0"	NL	HM	F2	HM	3	1	DH4	DJ4	DS4
113A	AISLE ACCESS	3' - 0"	7' - 0"	NL	HM	F2	HM	3	1	DH4	DJ4	DS4
114	WAREHOUSE STORAGE BAY 2	14' - 0"	14' - 0"	OHD-1	ST	-	STL	-		DH3	DJ3	DS3
115	EQUIPMENT SERVICE BAY	14' - 0"	14' - 0"	OHD-1	ST	-	STL	-		DH3	DJ3	DS3
116	ENGINE SERVICE BAY	14' - 0"	14' - 0"	OHD-1	ST	-	STL	-		DH3	DJ3	DS3
117	WAREHOUSE STORAGE BAY 1	14' - 0"	14' - 0"	OHD-1	ST	-	STL	-		DH3	DJ3	DS3
118	SWEEPER BAY	12' - 0"	14' - 0"	OHD-2	ST	-	STL	-		DH3	DJ3	DS3
119	WORKSHOP	3' - 0"	7' - 0"	NL	HM	F2	HM	3	1	DH4	DJ4	DS4

DOOR TYPES

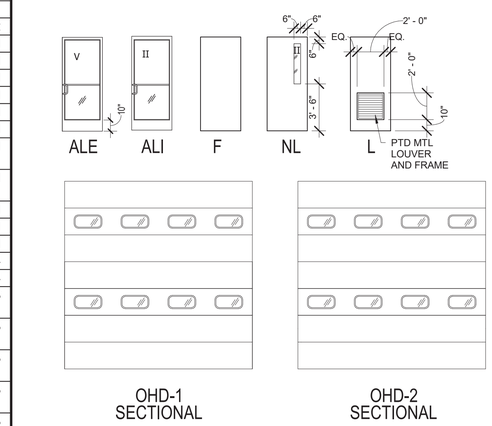

H.M. FRAME TYPES

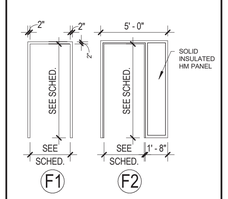

STOREFRONT TYPES

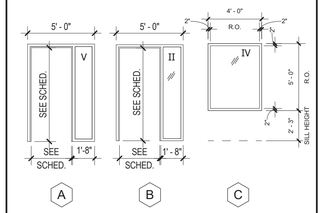

LOUVER TYPES

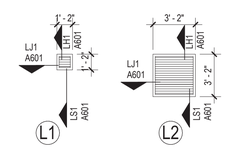

GENERAL NOTES

1. ALL DOORS TO BE LOCATED 4" FROM JAMB U.N.O.
2. COORDINATE GRAND MASTER KEYING WITH OWNER.
3. PAINT ALL MTL. GLAZING STOPS & LOUVERS
4. TYPICAL HM FRAME TO HAVE 2" FACE, 1/2" BACK BEND, 5 3/4" WIDTH, U.N.O.

DOOR NOTES

1. CARD READER. PROVIDE ELECTRIC LOCKS. COORDINATE WITH ELECTRICAL & OWNER'S SECURITY VENDOR.
2. INSULATED INTERIOR HM DOOR.
3. KERFRED FRAMES WITH WEATHER-STRIPPING AND BOTTOM SWEEPS.

TYP. DR. CLEARANCE

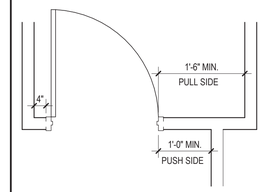

GLAZING NOTES

I	1/4" FLOAT GLASS
II	1/4" TEMPERED GLASS
III	1/4" WIRE GLASS
IV	1" INSULATED GLASS
V	1" TEMPERED INSULATED GLASS

ABBREVIATIONS

ACT	ACOUSTICAL TILE
ALUM	ALUMINUM
C	COVE BASE
CL	CHAIN LINK
CPT	CARPET
CT	CERAMIC TILE
CMU	CONCRETE MASONRY UNIT
CONC	CONCRETE
DNS	DENSIFIER- SEE SPEC. 03 30 00
EP	EPOXY PAINT
EPX	EPOXY FLOORING
ER	EPOXY RESIN
EXIST	EXISTING
EXP	EXPOSED CONSTRUCTION
FF	FACTORY FINISH
FG	FIBER GLASS
FRP	FIBER-REINFORCED PLASTIC
GL	GLAZING
GT	GLASS TILE
GWB	GYPSUM WALL BOARD
HM	HOLLOW METAL
LVT	LUXURY VINYL TILE
MLP	METAL LINER PANEL
OP	OPERABLE PARTITION
P	PAINT
PLAM	PLASTIC LAMINATE
PLYWD	PLYWOOD
RES	RESINOUS FLOORING
RB	RESILIENT BASE
R	RESINOUS BASE
RSF	RESILIENT SHEET FLOORING
SC	SEALED CONCRETE
SPC	STAINED AND POLISHED CONCRETE
SSC	STAINED AND SEALED CONCRETE
SSM	SOLID SURFACE MATERIAL
STL	STEEL
STN	STONE
VCT	VINYL COMPOSITION TILE
WD	WOOD
WLC	WALL COVERING
WMP	WIRE MESH PARTITION
WOM	WALK-OFF MAT

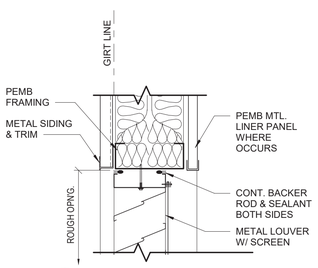

LH1 A601 LOUVER HEAD DETAIL
SCALE: 1 1/2" = 1'-0"

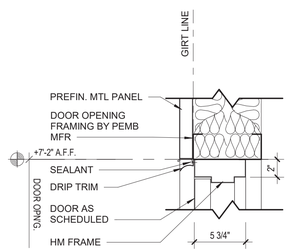

DH4 A601 DOOR HEAD DETAIL
SCALE: 1 1/2" = 1'-0"

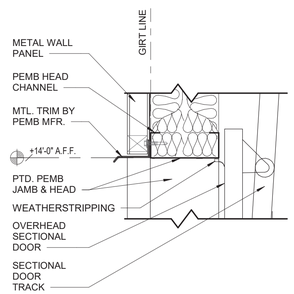

DH3 A601 OHD HEAD DETAIL
SCALE: 1 1/2" = 1'-0"

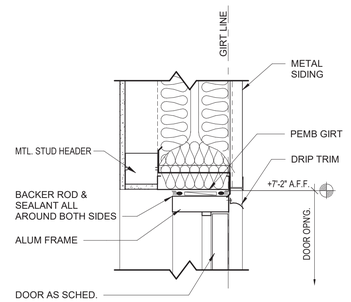

DH2 A601 DOOR HEAD DETAIL
SCALE: 1 1/2" = 1'-0"

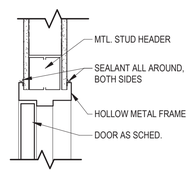

DH1 A601 DOOR HEAD DETAIL
SCALE: 1 1/2" = 1'-0"

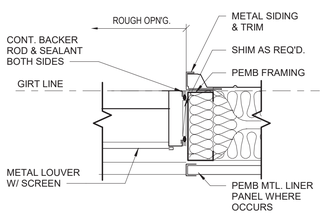

LJ1 A601 LOUVER JAMB DETAIL
SCALE: 1 1/2" = 1'-0"

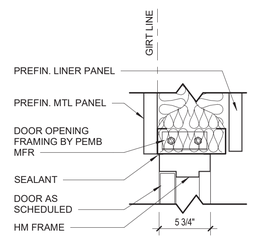

DJ4 A601 DOOR JAMB DETAIL
SCALE: 1 1/2" = 1'-0"

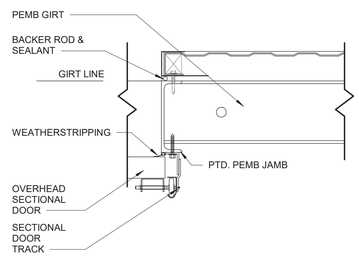

DJ3 A601 OHD JAMB DETAIL
SCALE: 1 1/2" = 1'-0"

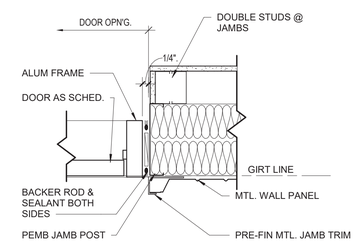

DJ2 A601 DOOR JAMB DETAIL
SCALE: 1 1/2" = 1'-0"

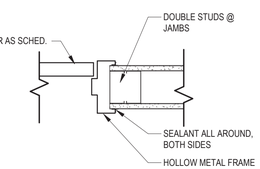

DJ1 A601 DOOR JAMB DETAIL
SCALE: 1 1/2" = 1'-0"

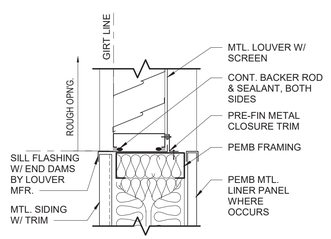

LS1 A601 LOUVER SILL DETAIL
SCALE: 1 1/2" = 1'-0"

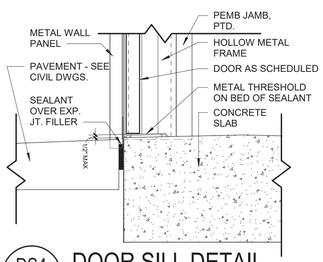

DS4 A601 DOOR SILL DETAIL
SCALE: 1 1/2" = 1'-0"

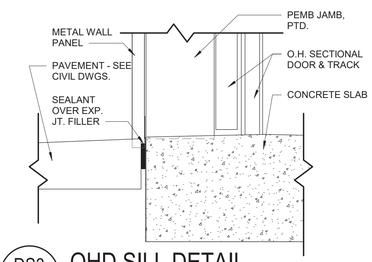

DS3 A601 OHD SILL DETAIL
SCALE: 1 1/2" = 1'-0"

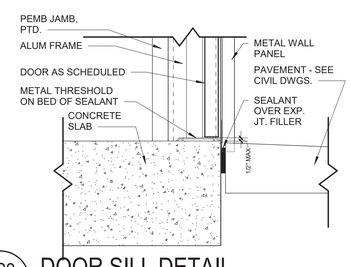

DS2 A601 DOOR SILL DETAIL
SCALE: 1 1/2" = 1'-0"

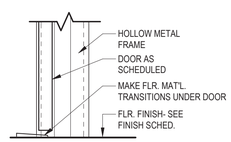

DS1 A601 DOOR SILL DETAIL
SCALE: 1 1/2" = 1'-0"

CLIENT

Rolesville
Genuine Community • Capital Connection
Est. 1837

ISSUES

ISSUE	ISSUANCE	DATE
A	SD PHASE PRICING PACKAGE	12/10/2021
B	OWNER REVIEW SET	05/05/2022
0	BUILDING PERMIT & BID SET	07/01/2022

CONSULTANTS

WITHERS RAVENEL

WithersRavenel
Engineers | Planners | Surveyors

SEAL

PRIME CONSULTANT

IBI GROUP
421 Fayetteville Street, Suite 1609
Raleigh, NC 27601, USA
tel 919 851 4211
ibigroup.com

PROJECT

ROLESVILLE PUBLIC WORKS

805 E. YOUNG STREET
ROLESVILLE NC

PROJECT NO: 135941	
DRAWN BY: CM	CHECKED BY: ST
PROJECT MGR: MH	APPROVED BY: MH
SCALE: As indicated	DATE: 07/01/2022

SHEET TITLE

DOOR , WINDOW and FINISH SCHEDULES

SHEET NUMBER A601

ISSUE 0

2022-06-30 3:41:38 PM

BIM 360://135941-Rolesville_Public_Works R2020/135941-Rolesville-ARCH_v20.rvt

10mm

SCALE CHECK 1 in

STRUCTURAL GRAPHIC MARKS

MARK	DESCRIPTION
Fx	FOOTING MARK
Px	PIER MARK
DPx	DRILLED PIER MARK
GBx	GRADE BEAM MARK
PCx	PRECAST CONCRETE MARK
HPx	STEEL H-PILE MARK
CBx	CONCRETE BEAM MARK
MWx	MASONRY WALL MARK
SBx	SOIL BORING MARK
Cx	COLUMN MARK
RCx	REINFORCED COLUMN MARK
Sx	SUPPORTED SLAB MARK
RDx	ROOF DECK MARK
Tx	TRUSS MARK
JTx	JACK TRUSS MARK
RTx	REINFORCED TRUSS MARK
Jx	JOIST MARK
JGx	JOIST GIRDER MARK
SPJx	SPECIAL JOIST MARK
CLx	CLAMP MARK
CRx	CRANE MARK
CGx	CRANE GIRDER MARK
MCx	MOMENT CONNECTION MARK
Bx	BEAM MARK
RBx	REINFORCED BEAM MARK
Hx	HANGER MARK
HBx	HOIST BEAM MARK
TBx	TROLLEY BEAM MARK
FBx	FLOOR BEAM MARK

NOTE:
GRAPHIC MARKS ARE WORKED IN CONJUNCTION WITH SCHEDULES AND OR DIAGRAMS

STRUCTURAL DRAWING ABBREVIATIONS

ACI	AMERICAN CONCRETE INSTITUTE
ADD	ADDENDUM
ADJ	ADJACENT
AFF	ABOVE FINISHED FLOOR
AISC	AMERICAN INSTITUTE OF STEEL CONSTRUCTION
ALT	ALTERNATE
ANC	ANCHOR
ANSI	AMERICAN NATIONAL STANDARDS INSTITUTE
APPROX	APPROXIMATE
AR	ANCHOR ROD
ARCH	ARCHITECTURAL
ASTM	AMERICAN SOCIETY FOR TESTING AND MATERIAL
B/B	BACK TO BACK
BC	BOTTOM CHORD
BET	BETWEEN
BLDG	BUILDING
BLK	BLOCK
BM	BEAM
BOF	BOTTOM OF FOOTING
BOS	BOTTOM OF STEEL
BOT	BOTTOM
BRCG	BRACING
BRG	BEARING
BRKT	BRACKET
BSMT	BASEMENT
BULL	BULLETIN
C/C	CENTER TO CENTER
CERT	CERTIFIED
CHKD PL	CHECKERED PLATE
CJ	CONSTRUCTION JOINT
CL	CENTERLINE
CLJ	CONTROL JOINT
CLR	CLEAR
CM	CENTIMETER
COL	COLUMN
CONC	CONCRETE
CONN	CONNECTION
CONSTR	CONSTRUCTION
CONT	CONTINUATION (CONTINUOUS)
CONTR	CONTRACT(OR)
CTR	CENTER
DET	DETAIL
DH	DOOR HEADER
DIA	DIAMETER
DIAG	DIAGONAL
DIM	DIMENSION
DJ	DOOR JAMB
DL	DEAD LOAD
DN	DOWN
DO	DOOR OPENING
DWG	DRAWING
DWL	DOWEL
EA	EACH
EF	EACH FACE
EL	ELEVATION
ELEC	ELECTRICAL
EMB	EMBEDMENT
EOD	EDGE OF DECK
EOS	EDGE OF SLAB
EQ	EQUAL
EQPT	EQUIPMENT
EW	EACH WAY
EXP JT	EXPANSION JOINT
EXP	EXPANSION
EXST	EXISTING
EXT	EXTERIOR
FDN	FOUNDATION
FDNC	FOUNDATION CONTRACT
FIN	FINISH
FL	FLOOR
FLG	FLANGE
FS	FAR SIDE
FT	FEET
FTG	FOOTING
FUT	FUTURE
GA	GAGE
GC	GENERAL CONTRACT
GALV	GALVANIZED
GENL	GENERAL
GOL	GAGE OUTSTANDING LEG
GR	GRADE
GRT	GRATING
H	HIGH
HGR	HANGER
HGT	HEIGHT
HORIZ	HORIZONTAL
HP	HIGH POINT
HS	HIGH STRENGTH
HSS	HOLLOW STRUCTURAL SECTION
ID	INSIDE DIAMETER
IE	INVERT ELEVATION
IN	INCHES
INCL	INCLUDE
INFO	INFORMATION
INT JT	INTERIOR JOINT
k	KIPS
KSF	KIPS PER SQUARE FOOT
KSI	KIPS PER SQUARE INCH
L	LENGTH
LB	POUND
LG	LONG
LH	LOUVER HEAD
LJ	LOUVER JAMB
LL	LIVE LOAD
LLH	LONG LEG HORIZONTAL
LLV	LONG LEG VERTICAL
LO	LOUVER OPENING
LP	LOW POINT
LS	LOUVER SILL
M	METER
MACH	MACHINE
MATL	MATERIAL
MAX	MAXIMUM
MECH	MECHANICAL
MEZZ	MEZZANINE
MFR	MANUFACTURER
MIN	MINIMUM
MISC	MISCELLANEOUS
MM	MILLIMETER
MT	METRIC TON
NIC	NOT IN CONTRACT
NO	NUMBER
NS	NEAR SIDE
NTS	NOT TO SCALE
O/O	OUT TO OUT
OC	ON CENTER
OPNG	OPENING
OPP	OPPOSITE
PC	PIECE
PEMB	PRE-ENGINEERED METAL BUILDING
PEN	PENETRATION
PL	PLATE
PROJ	PROJECTION
PSF	POUNDS PER SQUARE FOOT
PSI	POUNDS PER SQUARE INCH
R	RADIUS
R	RISER
REF	REFERENCE
REINF	REINFORCEMENT
REMV	REMOVABLE
REQD	REQUIRED
RR	RAILROAD
SCH	SCHEDULE
SECT	SECTION
SFRC	STEEL FIBER REINFORCED CONCRETE
SIM	SIMILAR
SP	SPACE
SPEC	SPECIFICATIONS
SQ	SQUARE
SSC	STRUCTURAL STEEL CONTRACT
STAGG	STAGGERED
STD	STANDARD
STIFF	STIFFENER
STL	STEEL
STRU	STRUCTURAL
SYM	SYMMETRICAL
t	THICKNESS
T	TREAD
T/	TOP OF
T&B	TOP AND BOTTOM
TC	TOP CHORD
TC BOLTS	TENSION CONTROLLED BOLTS
TEMP	TEMPERATURE
THK	THICK
TL	TOTAL LOAD
TOC	TOP OF CONCRETE
TOF	TOP OF FOOTING
TOP	TOP OF PIER
TOS	TOP OF STEEL
TYP	TYPICAL
UON	UNLESS OTHERWISE NOTED
VERT	VERTICAL
VSC	VERTICAL SLOTTED CONNECTION
W	WIDTH (WIDE)
W/	WITH
W/O	WITHOUT
WH	WINDOW HEAD
WJ	WINDOW JAMB
WL	WIND LOAD
WO	WINDOW OPENING
WP	WORKING POINT
WS	WINDOW SILL
WS	WATER STOP
WT	WEIGHT
WWR	WELDED WIRE REINFORCEMENT
WWF	WELDED WIRE FABRIC

STRUCTURAL GRAPHIC SYMBOLS

GRAPHIC SYMBOL	DESCRIPTION
A	NEW COL BUBBLE
A	EXST COLUMN BUBBLE
	EXST COLUMN LINE
	COLUMN CENTER LINE OR CENTER LINE
	NEW CONSTRUCTION
	EXST CONSTRUCTION
	EXST CONSTRUCTION TO BE REINFORCED (PLAN)
	EXST CONSTRUCTION TO BE REINFORCED (SECT/DET)
	EXST CONSTRUCTION TO BE REMOVED OPENING/BOXOUT
UP/DN	STAIR DIRECTION
SLOPE	SLOPE DIRECTION
R=x	AXIAL FORCE
0.0	MEMBER LOAD
	FLOOR ELEVATION DATUM
SBx	SOIL BORING
Sx	SUPPORTED SLAB
RDx	ROOF DECK
A	KEY NOTE
–X'–X"	EXTERIOR GRADE OR PAVEMENT ELEVATION
	CONCRETE PATTERN
	GRADE PATTERN
	STRUCTURAL FILL MATERIAL PATTERN
	KEY JOINT
	RUBBER OR VINYL WATERSTOP BENTONITE WATERSTOP
	STUD ANCHOR
	COMPOSITE SHEAR STUD
	REINFORCING STEEL
	WELED WIRE FABRIC
	EMBEDDED ADHESIVE REINFORCING STEEL
	EMBEDDED ADHESIVE ANCHOR EXPANSION
	ANCHOR
OR	COLUMN
OR	STUB COLUMN
MCx	MOMENT CONNECTION
CAP=xT	BRIDGE CRANE AND RATED CAPACITY
	CHECKERED PLATE (PLAN)
	CHECKERED PLATE (SECT/DET)
	GRATING (PLAN)
	GRATING (SECT/DET)
	GRATING (SECT/DET)
	CRANE RAIL
	METAL ROOF DECK
	METAL FLOOR DECK
OR	WOOD BLOCK
	WOOD BLOCK/BEAM END SECTION
	FIXED HANDRAIL
	REMOVABLE HANDRAIL
	SAFETY GATE FOR HANDRAIL
	LADDER (PLAN)
	LADDER W/CAGE (PLAN)
	MASONRY WALL (PLAN)
	MASONRY WALL W/ BRICK (SECT/DET)
	VERTICAL BRACE (PLAN)

CLIENT

Rolesville
Genuine Community • Capital Connection
Est. 1837

ISSUES

ISSUE	ISSUANCE	DATE
A	OWNER REVIEW SET	05/05/2022
0	BUILDING PERMIT & BID SET	07/01/2022

CONSULTANTS

WITHERS RAVENEL

WithersRavenel
Engineers | Planners | Surveyors

SEAL

NORTH CAROLINA PROFESSIONAL SEAL 047766 ENGINEER ROBERT C. ALLEN

DATE: 07/01/2022

PRIME CONSULTANT

IBI GROUP
421 Fayetteville Street, Suite 1609
Raleigh, NC 27601, USA
tel 919 851 4211
ibigroup.com

PROJECT

ROLESVILLE PUBLIC WORKS

805 E. YOUNG STREET
ROLESVILLE NC

PROJECT NO: 135941	
DRAWN BY: PM	CHECKED BY: PI
PROJECT MGR: MH	APPROVED BY: RA
SCALE:	DATE: 07/01/2022

SHEET TITLE

ABBREVIATIONS AND SYMBOLS

SHEET NUMBER	ISSUE
S001	0

BIM 360://135941-Rolesville_Public_Works R2020/135941-Rolesville-STRU_v20.rvt

SCALE CHECK 10mm 1 in

2022-06-30 3:41:35 PM

CONSTRUCTION GENERAL NOTES

1. THE CONTRACT STRUCTURAL DOCUMENTS REPRESENT THE FINISHED STRUCTURE. THE CONTRACTOR IS SOLELY RESPONSIBLE FOR THE MEANS AND METHODS OF CONSTRUCTION. PROVIDE ALL MEASURES REQUIRED TO PROTECT THE STRUCTURE, WORKMEN AND OTHER PERSONS DURING CONSTRUCTION. PROVIDE ADEQUATE BRACING, SHORING FOR CONSTRUCTION EQUIPMENT AND FOR THE BUILDING, FORMWORK AND SCAFFOLDING, SHEETING AND BRACING OF EXCAVATIONS AND OTHER TEMPORARY SUPPORTS AS REQUIRED. COMPLY WITH APPLICABLE REQUIREMENTS OF THE OSHA CODE, STATE CODES, LOCAL CODES AND OTHER MISCELLANEOUS REQUIREMENTS OF THE AUTHORITY HAVING JURISDICTION AT THE SITE.

2. CONSTRUCTION SHALL BE PERFORMED IN A SAFE MANNER BY ERECTING AND MAINTAINING SAFETY BARRICADES EQUAL TO OR EXCEEDING OSHA REQUIREMENTS AND ALL LOCAL CODES AROUND THE CONSTRUCTION AREA AT ALL TIMES. ALL EMPLOYEES SHALL AT ALL TIMES WORK IN COMPLIANCE WITH THE OWNERS SAFETY REGULATIONS.

3. PERFORM CONSTRUCTION IN A MANNER TO PREVENT DAMAGE TO EXISTING AND NEW STRUCTURES, UTILITIES AND OTHER PROPERTY. REPAIR SURFACES THAT HAVE BEEN DAMAGED. NEW WORK SUCH AS, BUT NOT LIMITED TO, PATCHING, PAINTING AND INSULATION SHALL MATCH EXISTING.

4. EXISTING UTILITIES AND ALL OTHER OBSTRUCTIONS TO WORK SHALL BE TEMPORARILY REMOVED BY THE CONTRACTOR AND RE-INSTALLED UNLESS OTHERWISE NOTED, INCLUDING NECESSARY MODIFICATIONS BY THE CONTRACTOR AFTER COMPLETION OF WORK.

5. PLAN AND SCHEDULE CONSTRUCTION AND DEMOLITION ACTIVITIES TO AVOID INTERFERENCE AND MINIMIZE DISRUPTION OF THE OWNER'S OPERATIONS.

6. BECOME FAMILIAR WITH THE EXISTING FIELD CONDITIONS AND MAKE NECESSARY FIELD SURVEYS AS REQUIRED FOR PROPER EXECUTION OF THE WORK. BEFORE PROCEEDING WITH THE DETAILING, CAREFULLY EXAMINE AND SURVEY ALL EXISTING STRUCTURES AND CONDITIONS TO VERIFY DIMENSIONS AND SIZES THAT ARE SHOWN ON THE DRAWINGS. REPORT ANY DISCREPANCIES IN THE EXISTING CONDITIONS IMMEDIATELY TO THE OWNER'S REPRESENTATIVE.

7. THE PLAN AND DETAIL DIMENSIONS AND ELEVATIONS RELATED TO EXISTING STRUCTURES HAVE BEEN TAKEN FROM AVAILABLE EXISTING DRAWINGS.

8. REFER TO ARCHITECTURAL DRAWINGS FOR DIMENSIONS AND ELEVATIONS NOT SHOWN ON THE STRUCTURAL DRAWINGS. REPORT ANY DISCREPANCIES BETWEEN THE ARCHITECTURAL AND STRUCTURAL DRAWINGS TO THE OWNER'S REPRESENTATIVE PRIOR TO CONSTRUCTION.

9. DETAILS LABELED "TYPICAL DETAILS" ON DRAWINGS APPLY TO SITUATIONS OCCURRING THAT ARE THE SAME OR SIMILAR TO THOSE SPECIFICALLY DETAILED. SUCH DETAILS APPLY WHETHER OR NOT DETAILS ARE REFERENCED AT EACH LOCATION. NOTIFY THE OWNER'S REPRESENTATIVE OF CONFLICTS REGARDING APPLICABILITY OF "TYPICAL DETAILS".

10. PRINCIPAL OPENINGS THROUGH THE FRAMING ARE SHOWN ON DRAWINGS. EXAMINE THE ARCHITECTURAL AND MECHANICAL DRAWINGS FOR THE REQUIRED OPENINGS AND PROVIDE FOR REQUIRED OPENINGS WHETHER SHOWN ON THE STRUCTURAL DRAWINGS OR NOT. VERIFY SIZE AND LOCATION OF OPENINGS WITH THE MECHANICAL CONTRACTOR. DEVIATIONS FROM THE OPENINGS SHOWN ON THE STRUCTURAL DRAWINGS MUST BE APPROVED PRIOR TO IMPLEMENTING CHANGES.

11. DO NOT STORE OR STACK CONSTRUCTION MATERIALS ON ERECTED OR POURED FLOORS OR ROOFS IN EXCESS OF 80 PERCENT OF SPECIFIED DESIGN LIVE LOAD. MINIMIZE DYNAMIC IMPACT WHEN PLACING MATERIALS ON FLOORS OR ROOFS.

12. THE OWNER WILL RETAIN AN INDEPENDENT TESTING AGENCY TO PROVIDE ALL REQUIRED CONSTRUCTION MATERIAL TESTING, INSPECTION AND OBSERVATIONS.

13. ALL TEST REPORTS SHALL BE RECEIVED WITHIN THREE WORKING DAYS OF THE TEST BEING PERFORMED. TWO COPIES OF THESE REPORTS SHALL BE FORWARDED TO THE OWNER'S REPRESENTATIVE. TEST RESULTS NOT IN CONFORMANCE WITH PROJECT SPECIFICATIONS SHALL BE HIGHLIGHTED.

EQUIPMENT AND UTILITY SUPPORT

1. MECHANICAL EQUIPMENT LOADS INDICATED ARE BASED ON THE UNITS SHOWN ON THE MECHANICAL DRAWINGS AND ARE TOTAL OPERATING WEIGHTS UNLESS OTHERWISE NOTED. ANY CHANGES IN TYPE, SIZE, ORIENTATION OR NUMBER OF PIECES OF EQUIPMENT SHALL BE REPORTED TO THE OWNER'S REPRESENTATIVE FOR VERIFICATION OF THE ADEQUACY OF SUPPORTING MEMBERS PRIOR TO THE PLACEMENT OF SUCH EQUIPMENT.

2. EQUIPMENT LOADS SHALL BE SUPPORTED FROM THE FRAMING TO AVOID OVERSTRESS. EQUIPMENT CONTRACTORS ARE REQUIRED TO COORDINATE THEIR LOADS WITH THOSE OF OTHERS TO AVOID OVERSTRESS.

3. EQUIPMENT CONTRACTORS SHALL SUBMIT FOR REVIEW AND APPROVAL BY THE OWNER'S REPRESENTATIVE DETAILED PLANS FOR ALL PROPOSED EQUIPMENT AND UTILITY HANGING LOADS SHOWING THEIR MAGNITUDE AND LOCATIONS ALONG WITH DETAILS AND STRUCTURAL DESIGN CALCULATIONS OF THE HANGING DEVICES WHICH CONNECT THE EQUIPMENT TO THE SUPPORTING FRAMING. WEIGHTS OF ALL ITEMS OF EQUIPMENT SHALL BE CLEARLY SHOWN TO ALLOW CHECKING OF THE ACCUMULATED LOADS AT THE SUPPORT LOCATIONS. THIS INFORMATION SHALL BE SUBMITTED AND APPROVED PRIOR TO ERECTION OF ANY EQUIPMENT.

4. EXTREME CARE SHALL BE TAKEN IN LOCATING SUPPORTS FOR MECHANICAL AND ELECTRICAL UTILITIES. SUPPLEMENTAL FRAMING SHALL BE PROVIDED AS REQUIRED BY THE CONTRACTOR TO SUPPORT AND DISTRIBUTE LOAD. SUPPORTS SHALL BE LOCATED IN A MANNER TO AVOID OVERSTRESS OF THE STRUCTURAL SUPPORTING MEMBER.

5. FOR MECHANICAL UTILITY (PIPES, DUCTS, ETC.) SUPPORT GENERAL NOTES SEE MECHANICAL DRAWINGS.

6. FOR ELECTRICAL UTILITY (CABLE TRAY, BUS DUCT, ETC.) SUPPORT GENERAL NOTES SEE ELECTRICAL DRAWINGS.

7. NO LOADS SHALL BE APPLIED TO THE HORIZONTAL BRACING OR BRIDGING SYSTEM.

CAST-IN-PLACE CONCRETE

1. DESIGN, DETAILING, AND CONSTRUCTION OF REINFORCED CONCRETE SHALL CONFORM TO THE FOLLOWING PUBLICATIONS UNLESS OTHERWISE NOTED:
   a. BUILDING CODE REQUIREMENTS FOR REINFORCED CONCRETE (ACI 318)
   b. ACI DETAILING MANUAL (ACI SP66)
   c. SPECIFICATIONS FOR STRUCTURAL CONCRETE FOR BUILDINGS (ACI 301)

2. SLAB ON GROUND CONCRETE SHALL BE NORMAL WEIGHT AND SHALL DEVELOP A MINIMUM COMPRESSIVE STRENGTH OF 4000 PSI AT 28 DAYS UNLESS HIGHER STRENGTH IS NOTED ON THE DRAWINGS.

3. NORMAL WEIGHT CONCRETE USED FOR SPREAD FOOTINGS, FORMED PIERS, GRADE WALLS AND SHALL DEVELOP A MINIMUM COMPRESSIVE STRENGTH OF 3500 PSI AT 28 DAYS UNLESS OTHERWISE NOTED.

4. PROVIDE ADEQUATE SHEETING, SHORING AND BRACING OF EXCAVATIONS AS REQUIRED FOR SAFE CONSTRUCTION. DESIGN OF TEMPORARY EARTH RETENTION SYSTEMS OR STRUCTURES IS THE RESPONSIBILITY OF THE CONTRACTOR.

5. REINFORCING SHALL BE DEFORMED BARS CONFORMING TO ASTM A615 (GRADE 60) AND SHALL HAVE A MINIMUM YIELD STRENGTH OF 60 KSI.

6. WHERE DEVELOPMENT OR SPLICING IS REQUIRED, REINFORCING SHALL HAVE EITHER TENSION EMBEDMENT OR TENSION CLASS "B" LAP SPLICE UNLESS OTHERWISE NOTED.

7. PROVIDE 2-#5 ADDITIONAL BAR PER LAYER OF REINFORCING AROUND OPENINGS LARGER THAN ONE FOOT SQUARE OR DIAMETER UNLESS OTHERWISE NOTED. EXTEND BARS A MINIMUM OF 24 INCHES BEYOND OPENINGS UNLESS OTHERWISE NOTED. PROVIDE 2-#5 x 4'-0" LONG DIAGONAL BARS PER LAYER OF REINFORCEMENT AT ALL RE-ENTRANT CORNERS.

8. PROVIDE HORIZONTAL BENT BARS AT CORNERS AND INTERSECTIONS OF CONCRETE WALLS USING THE SAME SIZE AND SPACING AS FOR HORIZONTAL WALL REINFORCING. USE BENT DOWELS IF NECESSARY TO DEVELOP ANCHORAGE.

9. PROVIDE VERTICAL DOWELS FROM PIER FOOTINGS TO PIERS AND FROM WALL FOUNDATIONS TO WALLS OF SAME SIZE AND SPACING AS VERTICAL REINFORCING AND OFFSET FOR SPLICE AS REQUIRED.

10. CONSTRUCTION JOINTS SHALL HAVE A KEY (OR KEYS) CENTERED ON THE MEMBER. WHERE THE SIZE OF KEY IS NOT SHOWN ON THE DRAWINGS, THE KEY WIDTH SHALL BE ONE FOURTH OF THE CROSS SECTION DIMENSION OF THE MEMBER AND THE KEY DEPTH SHALL BE 10 PERCENT OF THE CROSS SECTION DIMENSION OF THE MEMBER WITH A MINIMUM DIMENSION OF 3/4 INCH.

11. PLACE WALLS, GRADE BEAMS AND STRIP FOOTINGS TO A MAXIMUM LENGTH OF 100 FEET BETWEEN CONSTRUCTION JOINTS.

12. PROVIDE SMOOTH FORMED FINISH ON EXPOSED CONCRETE.

13. PROVIDE 3/4 INCH BY 45 DEGREE BEVELED EDGES ON EXPOSED CORNERS UNLESS OTHERWISE NOTED.

14. ANCHOR RODS AND SETTING PLANS SHALL BE FURNISHED BY THE STRUCTURAL STEEL FABRICATOR. ANCHOR RODS SHALL BE SET PLUMB AND VERTICAL WITH TEMPLATES BY THE CONTRACTOR FOR FOUNDATIONS. TOP OF PIERS OR FOOTINGS SHALL BE CLEANED.

15. FORMS AND REINFORCING STEEL SET IN PLACE MUST BE INSPECTED AND APPROVED BY THE OWNER'S REPRESENTATIVE PRIOR TO PLACING CONCRETE.

16. BEFORE PLACING CONCRETE, REFER TO OTHER TRADE DRAWINGS AND COORDINATE THE LOCATION AND SIZE OF ITEMS SUCH AS, BUT NOT LIMITED TO, OPENINGS, EQUIPMENT PADS, PIPING, CONDUIT, DRAINS, DEPRESSED FLOORS, DOOR HOLD DOWNS IN GRADE WALLS AND EMBEDDED ITEMS.

17. CONSULT WITH THE OWNER'S REPRESENTATIVE FOR APPROVAL OF EXCAVATIONS WHEN CONDITIONS SUCH AS, BUT NOT LIMITED, TO POOR SOIL, WATER, OBSTRUCTIONS, PIPING, AND ADJACENT SEWERS.

18. PROTECT ALL CONSTRUCTION SUCH AS, BUT NOT LIMITED TO, SLABS, GRADE WALLS, OTHER WALLS, AND FOUNDATIONS FROM DAMAGE DUE TO FROST HEAVE.

19. PROTECT ALL CONSTRUCTION SUCH AS, BUT NOT LIMITED TO, SLABS, GRADE WALLS, OTHER WALLS, AND FOUNDATIONS FROM DAMAGE DUE TO FROST HEAVE.

ANCHOR ROD

1. REFER TO DRAWING S-502 FOR ANCHOR ROD DETAILS.

2. ANCHOR RODS FOR COLUMNS BEARING ON SPREAD FOOTINGS WITHOUT FORMED PIERS SHALL BE SUPPLIED AND INSTALLED BY THE FOUNDATION CONTRACTOR. ANCHOR RODS FOR COLUMNS BEARING ON SPREAD FOOTINGS WITH FORMED PIERS SHALL BE SUPPLIED AND INSTALLED BY THE FOUNDATION CONTRACTOR.

3. ANCHOR RODS SHALL BE ASTM F1554, GRADE 55, WITH WELDABILITY SUPPLEMENT S1 (WITH THE CARBON EQUIVALENT FORMULA IN ASTM F1554 SECTION S1.5.2.1), THREADED WITH NUT TOP AND BOTTOM, UNLESS OTHERWISE NOTED, WITH ASTM A563, GRADE A, HEAVY HEXAGON CARBON STEEL NUTS, AND ASTM F436, TYPE 1, HARDENED CARBON STEEL WASHERS.
4. INSTALLATION OF ANCHOR RODS SHALL BE IN ACCORDANCE WITH THE AISC CODE OF STANDARD PRACTICE.

5. THE TOPS OF DRILLED AND FORMED PIERS UNDER BASE PLATES SHALL BE CLEANED BY THE FOUNDATION CONTRACTOR.

6. TOLERANCE ON ANCHOR ROD PLACEMENT IS IN PLAN AND 1/50 OUT OF PLUMB.

7. NUTS FOR THE ANCHOR RODS TO BE ASTM A563, GRADE O, A OR B.

DEWATERING

1. MAINTAIN POSITIVE, FREE-DRAINING DRAINAGE WITHIN WORK AREA. ARRANGE SITE EXCAVATION AND FILL WORK TO AVOID OBSTRUCTING NATURAL FLOW OF WATER AWAY FROM AREAS OF WORK. IF NECESSARY, PROVIDE TEMPORARY DRAINAGE DITCHES OR TEMPORARY PUMPING TO EXISTING DRAINAGE FACILITIES ON OR OFF SITE. FILL TEMPORARY DRAINAGE DITCHES AS NECESSITY IS REDUCED.

2. PROVIDE TEMPORARY DRAINAGE TO KEEP EXCAVATIONS FREE FROM WATER UNTIL PERMANENT CONSTRUCTION IS IN PLACE, BACKFILLING IS COMPLETED, AND BUILDING DRAINS ARE OPERATING AND CAPABLE OF MAINTAINING DRAINAGE. SUBMIT PROPOSED METHOD OF DEWATERING THAT INCLUDES POINTS OF DISCHARGE TO REGISTERED DESIGN PROFESSIONAL AND OWNER'S REPRESENTATIVE FOR APPROVAL BEFORE IMPLEMENTATION. PROVIDE SYSTEMS REQUIRED BY SITE CONDITIONS. OPERATE PUMPS AND OTHER WATER MOVING SYSTEMS TO ACCOMPLISH ABOVE 24-HOURS PER DAY.

METAL DECK

1. DESIGN, FABRICATION AND ERECTION OF METAL ROOF DECK, NON-COMPOSITE PERMANENT METAL FORM DECK AND COMPOSITE METAL FLOOR DECK SHALL CONFORM TO THE STEEL DECK INSTITUTE (SDI) "CODE OF RECOMMENDED STANDARD PRACTICE AND BASIC DESIGN SPECIFICATIONS".

2. DECK SHALL BE MANUFACTURED FROM STEEL SHEETS CONFORMING TO ASTM A611 GRADE C AND D OR ASTM A653 OR HIGHER SPECIFICATIONS. MINIMUM YIELD STRENGTH SHALL BE 33 KSI.

3. INSTALL DECK AS THREE-SPAN CONTINUOUS WHERE POSSIBLE.

4. ENDS OF COMPOSITE FLOOR DECK SHALL BE BUTTED.

5. ATTACH DECK TO SUPPORT FRAMING AND PROVIDE SIDE LAPS AS INDICATED AND IN ACCORDANCE WITH THE DECK MANUFACTURER'S INSTRUCTIONS FOR INSTALLATION.

6. AT PERIMETER OF DECK, SECURE DECK TO SUPPORT FRAMING WITH SAME ATTACHMENT METHOD AND SPACING AS INDICATED FOR INTERIOR SUPPORTS.

7. WHERE PARTIAL PANELS MAY BE REQUIRED TO COMPLETE DECK INSTALLATION AT PERIMETER OF STRUCTURE, PROVIDE ATTACHMENTS IN EACH FLUTE TO SUPPORT FRAMING.

8. AT ENDS OF DECK OR WHERE CHANGES OF DECK DIRECTION OCCUR, FASTEN TO SUPPORTS AT EACH FLUTE. PROVIDE ADEQUATE CLOSURES AND FASTENERS TO SIDES AT EIGHTEEN INCHES ON CENTER.

9. PROVIDE SIX INCH CLOSURE STRIP WHERE CHANGES IN DECK DIRECTION OCCUR. CLOSURE MATERIAL SHALL BE SAME GAGE AS DECK.

10. WHERE DECK IS ATTACHED TO SUPPORT FRAMING BY WELDING, PROVIDE WELDING MATERIALS AND INSTALLATION PROCEDURES TO PREVENT BURNING HOLES OR OTHERWISE DAMAGING DECK.

REINFORCING STEEL

1. PROVIDE DETAILING, FABRICATION, AND INSTALLATION OF REINFORCING AND ACCESSORIES IN ACCORDANCE WITH ACI 315 AND ACI 318.

2. PROVIDE NEW BILLET STEEL REINFORCING BARS IN ACCORDANCE WITH ASTM A 615, GRADE 60.

3. COORDINATE PLACEMENT OF CAST-IN-PLACE EMBEDS AND ANCHOR RODS. SET ANCHOR RODS WITH A TEMPLATE. SECURELY ATTACH EMBED ITEMS TO FORMWORK OR REINFORCING.

4. PROVIDE CLASS "B" REINFORCEMENT SPLICES FOR CONTINUOUS REINFORCEMENT. PROVIDE STANDARD 90-DEGREE HOOKS IN ACCORDANCE WITH ACI 318, UNLESS NOTED OTHERWISE.

5. MAINTAIN THE FOLLOWING CONCRETE COVERAGE FOR REINFORCING STEEL UNLESS NOTED OTHERWISE.
   a. CONCRETE CAST AGAINST EARTH: 3 INCHES
   b. CONCRETE EXPOSED TO WEATHER
      i. NUMBER 6 AND LARGER: 2 INCHES
      ii. NUMBER 5 AND SMALLER: 1 1/2 INCHES
   c. CONCRETE NOT EXPOSED TO WEATHER OR IN CONTACT WITH THE GROUND:
      i. SLABS AND WALLS
         1. NUMBER 14 AND NUMBER 18: 1 1/2 INCHES
         2. NUMBER 11 AND SMALLER: 3/4 INCHES

6. DO NOT WELD OR BEND REINFORCEMENT IN THE FIELD UNLESS SPECIFICALLY SHOWN OR APPROVED BY THE STRUCTURAL ENGINEER.

7. WHEN SPECIFICALLY APPROVED, PROVIDE WELDED REINFORCEMENT ACCORDANCE WITH ASTM A 706 GRADE 60. USE LOW HYDROGEN ELECTRODES FOR WELDING OF REINFORCEMENT IN CONFORMANCE WITH "RECOMMENDED PRACTICES FOR WELDING REINFORCING STEEL, AMERICAN WELDING SOCIETY, AWS D12.1. PROVIDE ASTM GRADE 40 REINFORCING BARS WHERE DETAILED BARS ARE TO BE WELDED TO A STEEL SECTION.

8. WHERE REQUIRED, PROVIDE DOWELS TO MATCH SIZE AND SPACING OF MAIN REINFORCING.

9. PROVIDE CONTINUOUS HORIZONTAL WALL REINFORCEMENT WITH 90-DEGREE BENDS AND EXTENSIONS AT CORNERS AND INTERSECTIONS AS SHOWN ON TYPICAL BAR PLACING DETAILS.

10. WHEN SHOWN ON DRAWINGS PROVIDE FIBER REINFORCING IN ACCORDANCE WITH SPECIFICATIONS. ADD FIBER REINFORCING TO THE CONCRETE MIX IN ACCORDANCE WITH ASTM C 1116 AND THE MANUFACTURERS RECOMMENDATIONS.

11. REFER TO SS0-006 FOR CONCRETE REINFORCING TENSION LAP SPLICE AND DEVELOPMENT LENGTH SCHEDULE

POST INSTALLED ANCHORS

1. POST INSTALLED ANCHORS INCLUDE ALL MECHANICAL AND ADHESIVE ANCHORS NOTED ON CONSTRUCTION DOCUMENTS. ALL POST INSTALLED ANCHORS SHALL CONFORM TO AC-193 FOR MECHANICAL ANCHORS AND AC-308 FOR ADHESIVE ANCHORS.

2. USE ONLY CODE APPROVED ANCHORS WITH VALID ICC-ESR EVALUATION REPORT FOR USE IN BASE MATERIAL SHOWN ON THE CONSTRUCTION DOCUMENTS. SUBMIT ICC-ESR EVALUATION REPORT TO STRUCTURAL ENGINEER AND SPECIAL INSPECTION AGENT FOR APPROVAL.

3. INSTALLER OF POST INSTALLED ANCHORS SHALL BE TRAINED BY ANCHOR MANUFACTURER.

4. CLEAN EXISTING CONCRETE SURFACE TO SOLID STRUCTURAL CONCRETE. GRIND SMOOTH FOR FULL STEEL CONTACT AND TO PREVENT GAPS BETWEEN STEEL AND CONCRETE. ALTERNATIVELY, PROVIDE NON-SHRINK GROUT IN ALL VOIDS BETWEEN STEEL AND BASE MATERIAL.

5. DRILL SMALLER DIAMETER PILOT HOLE TO AVOID EXISTING REINFORCING. SUBMIT LOCATION OF NEW HOLE TO STRUCTURAL ENGINEER FOR REVIEW.

6. IF EXISTING REINFORCING IS FOUND, SHIFT HOLE TO AVOID EXISTING REINFORCING. SUBMIT LOCATION OF NEW HOLE TO STRUCTURAL ENGINEERING FOR REVIEW.

7. INSTALL MECHANICAL ANCHORS AND ADHESIVE ANCHORS IN STRICT ACCORDANCE WITH MANUFACTURER'S WRITTEN RECOMMENDATIONS AND PROCEDURE DETAILED IN ICC-ESR EVALUATION REPORT.
8. SPECIAL INSPECTIONS ARE REQUIRED FOR ALL MECHANICAL AND ADHESIVE ANCHORS. INSPECT AND TEST POST INSTALLED ANCHORS AS SPECIFIED IN ICC-ESR EVALUATION REPORT.

9. THE FOLLOWING ANCHORS ARE APPROVED. SUBMITTALS FOR ALTERNATIVE EQUAL ANCHORS WILL BE REVIEWED BY STRUCTURAL ENGINEER AND APPROVED AT THEIR DISCRETION.

ANCHOR TYPE:	APPROVED ANCHOR:	ICC-ESR REPORT No:	BASE MATERIAL:
SCREW ANCHORS	HILTI KWIK HUS- SIMPSON SS TITEN-HD	ESR-3027 ESR-2713	CONCRETE CONCRETE
STEEL DROP-IN ANCHOR	HILTI HDI/HDI-L SIMPSON DROP-IN	(N/A) (N/A)	UNCRACKED CONCRETE PRECAST CONCRETE
EXPANSION ANCHORS	HILTI KWIK BOLT TZ HILTI KWIK BOLT 3 SIMPSON SB 2	ESR-1917 ESR-2302 ESR-3037	CONCRETE UNCRACKED CONCRETE CONCRETE
ADHESIVE ANCHORS	HILTI HIT-HY200 SAFESET HILTI HIT-HY70 + HAS/REBAR HILTI HIT-HY70 + SIMPSON AT-XP SIMPSON AT-XP SIMPSON AT-XP	ESR-3187 ESR-3342 ESR-2682 ER-263 ER-281 ER-281	CONCRETE GROUTED MASONRY HOLLOW MASONRY CONCRETE GROUTED MASONRY HOLLOW MASONRY

NOTE: REFER TO PLAN NOTES, DETAILS AND/OR SCHEDULES FOR THE DIAMETER OF ANCHOR ROD, OR SIZE OF REBAR USED, AND THE EMBED DEPTH REQUIRED FOR POST INSTALLED ANCHORS.

PRE-ENGINEERED METAL BUILDINGS

1. PRE-ENGINEERED METAL BUILDING MANUFACTURER SHALL DESIGN AND FURNISH ALL FRAMING UNLESS SPECIFICALLY STATED OTHERWISE ON THE STRUCTURAL DRAWINGS.
   a. THE SCOPE OF THE PRE-MANUFACTURED METAL BUILDING STRUCTURE SHALL INCLUDE THE DESIGN, ENGINEERING, FABRICATION, DELIVERY AND ERECTION OF THE COMPLETE STRUCTURAL STEEL FRAMING AND EXTERIOR SKIN PACKAGE. THE METAL BUILDING MANUFACTURER SHALL BE CERTIFIED BY AMERICAN INSTITUTE OF STEEL CONSTRUCTION (AISC) METAL BUILDING CERTIFICATION PROGRAM.

2. METAL BUILDING SUPPLIER SHALL FURNISH COMPLETE SET OF DRAWINGS SHOWING PROPOSED FRAMING SYSTEM INCLUDING LOCATIONS OF ALL PRIMARY AND SECONDARY FRAMING ELEMENTS, INCLUDING LOCATIONS OF RIGID MOMENT RESISTING FRAMES AND BRACED FRAMES.

3. METAL BUILDING SUPPLIER SHALL FURNISH A DRAWING SHOWING THE COLUMN CENTER LINE DIMENSIONS AND SIZES, LOCATION AND PATTERN OF ANCHOR RODS. THIS DRAWING SHALL INCLUDE CERTIFIED FOUNDATION REACTIONS. FOUNDATION DESIGN AND DRAWINGS SHALL BE REVIEWED TO ENSURE THE DESIGN IS IN ACCORDANCE WITH THE FINAL BUILDING DESIGN, DIMENSIONS AND FOUNDATION REACTIONS.

4. PRE-ENGINEERED BUILDING MANUFACTURER SHALL DESIGN AND SUPPLY ALL FRAMING FOR ROOF OPENINGS, ROOF TOP UNITS AND ANY ROOF SUPPORTED EQUIPMENT AND UTILITIES.

FIBER REINFORCEMENT

1. ALL SLAB ON GROUND SHALL BE REINFORCED WITH STEEL FIBERS.

2. MATERIALS, BATCHING REQUIREMENTS, MIXING AND TESTING PROCEDURE SHOULD COMPLY WITH THE APPLICABLE SECTION OF ASTM C1116.

3. PROVIDE MINIMUM DOSAGE OF FIBERS TO ACHIEVE A MINIMUM POST CRACK EQUIVALENT FLEXURAL STRENGTH OF 200 PSI IN ACCORDANCE WITH ASTM C1609.

CLIENT

Rolesville
Genuine Community • Capital Connection
Est. 1837

ISSUES

ISSUE	ISSUANCE	DATE
A	OWNER REVIEW SET	05/05/2022
0	BUILDING PERMIT & BID SET	07/01/2022

CONSULTANTS

WITHERS RAVENEL
WithersRavenel
Engineers | Planners | Surveyors

SEAL

NORTH CAROLINA PROFESSIONAL SEAL 047766 ENGINEER REBECCA A. HECK

DATE: 07/01/2022

PRIME CONSULTANT

IBI GROUP
421 Fayetteville Street, Suite 1609
Raleigh, NC 27601, USA
tel 919 851 4211
ibigroup.com

PROJECT

ROLESVILLE PUBLIC WORKS

805 E. YOUNG STREET
ROLESVILLE NC

PROJECT NO: 135941	
DRAWN BY: PM	CHECKED BY: PI
PROJECT MGR: MH	APPROVED BY: RA
SCALE:	DATE: 07/01/2022

SHEET TITLE

GENERAL NOTES

SHEET NUMBER S002 | ISSUE 0

BIM 360://135941-Rolesville_Public_Works R2020/135941-Rolesville-STRU_v20.rvt

SCALE CHECK 1 in | 10mm

2022-06-30 3:39:04 PM

STRUCTURAL STEEL

1. DESIGN, DETAILING, FABRICATION AND ERECTION OF STRUCTURAL STEEL SHALL CONFORM TO THE LATEST EDITION OF THE FOLLOWING PUBLICATIONS EXCEPT AS SPECIFICALLY INDICATED IN THE CONTRACT DOCUMENTS:
   a. AMERICAN INSTITUTE OF STEEL CONSTRUCTION (AISC) STEEL CONSTRUCTION MANUAL
   b. AISC SPECIFICATION FOR STRUCTURAL STEEL BUILDINGS (ANSI/AISC 360)
   c. SPECIFICATION FOR STRUCTURAL JOINTS USING ASTM A325 OR A490 BOLTS BY RESEARCH COUNCIL ON STRUCTURAL CONNECTIONS (RCSC)
   d. AISC CODE OF STANDARD PRACTICE FOR STEEL BUILDINGS AND EDGES
   e. AISC SEISMIC PROVISIONS FOR STRUCTURAL STEEL BUILDINGS (ANSI/AISC 341)
   f. AISC SPECIFICATIONS FOR PREQUALIFIED CONNECTIONS FOR SPECIAL & INTERMEDIATE STEEL MOMENT FRAMES FOR SEISMIC APPLICATIONS (ANSI/AISC358)
   g. AISC DETAILING FOR STEEL CONSTRUCTION (AISC 326)
   h. AMERICAN WELDING SOCIETY (AWS) STRUCTURAL WELDING CODE D1.1

2.MATERIALS SHALL CONFORM TO THE FOLLOWING SPECIFICATIONS UON:
   a. STRUCTURAL WIDE FLANGE MEMBERS AND TEES (W & WT)..... ASTM A992
   b. ALL OTHER STRUCTURAL SHAPES (L,C,MC,S,ST,M,MT,HP & PLATE).... ASTM A36
   c. HOLLOW STRUCTURAL STEEL (HSS) ..... ASTM A500 GRADE B, WITH Fy = 46 KSI
   d. STEEL PIPE .... ASTM A53 GRADE B, TYPE E OR S WITH Fy=35 KSI

3. SUBMIT DRAWINGS AND CALCULATIONS OF TYPICAL CONNECTION DETAILS FOR APPROVAL PRIOR TO THE PRE-DETAILING MEETING AND PRIOR TO PROCEEDING WITH DETAILING.

4. SUBMIT STRUCTURAL CALCULATIONS FOR STEEL TO STEEL CONNECTIONS THAT ARE INDICATED AS DELEGATED DESIGNS ON THE DRAWINGS. REFER TO PLANS, SECTIONS AND GENERAL NOTES FOR SERVICE LEVEL CONNECTION DESIGN FORCES AND LOAD COMBINATIONS. CALCULATIONS SHALL BE SIGNED AND SEALED BY A LICENSED PROFESSIONAL ENGINEER IN THE STATE OF NORTH CAROLINA AND SUBMITTED TO THE ARCHITECT/ENGINEER FOR REVIEW AND APPROVAL.
DELEGATED CONNECTION DESIGNS INCLUDE THE FOLLOWING:
   a. VERTICAL BRACING CONNECTIONS
   b. HORIZONTAL BRACING CONNECTIONS
   c. BEAM AND GIRDER SIMPLE SHEAR END CONNECTIONS
   d. TRUSS SPLICES
   e. TRUSS END CONNECTIONS
   f. JOIST AND JOIST GIRDER END CONNECTIONS

5. UNLESS OTHERWISE NOTED OR DETAILED, DESIGN ALL BEAM CONNECTIONS TO CONFORM TO AISC STANDARD SHEAR PLATE CONNECTIONS CAPABLE OF SUPPORTING 50 PERCENT (75 PERCENT FOR COMPOSITE BEAMS) OF THE BEAMS TOTAL UNIFORM LOAD CAPACITY (SPAN TIMES AISC TABULATED VALUE FOR ALLOWABLE UNIFORM LOAD IN KIPS FOR BEAMS LATERALLY SUPPORTED). CONNECTION PLATES SHALL BE 5/16 INCH MINIMUM THICKNESS.

6. THE MINIMUM END CONNECTION OF ANY MEMBER SHALL BE MADE WITH TWO A325 BOLTS OR EQUIVALENT WELD. MINIMUM BOLT DIAMETER SHALL BE 3/4 INCH UNLESS NOTED.

7. ALL STRUCTURAL STEEL BOLTING SHALL USE ASTM A325-N OR A490 HIGH STRENGTH BEARING TYPE BOLTS (THREADS ASSUMED IN THE SHEAR PLANE) THAT ARE FULLY PRE-TENSIONED USING THE "TURN OF THE NUT METHOD" WITH A HARDENED WASHER UNDER THE TURNED ELEMENT. USING LOCK WASHERS, LOCK NUTS OR MACHINE BOLTS FOR STRUCTURAL CONNECTIONS IS NOT PERMITTED. THE USE OF "SNUG TIGHT" BOLTS IS NOT PERMITTED, EXCEPT AT TOP OF WIND COLUMNS.

8. MAKE FIELD CONNECTIONS WITH ASTM A325-N TYPE 1 OR A490 HIGH STRENGTH BEARING TYPE BOLTS (THREADS ASSUMED IN THE SHEAR PLANE) UNLESS OTHERWISE NOTED.

9. PROVIDE SLIP-CRITICAL BOLTING, USING CLASS "A" SURFACE VALUES (CLEAN MILL SCALE), AT ALL AREAS WHERE SLIPPAGE CAN CAUSE DISTRESS, SUCH AS, BUT NOT LIMITED TO THE FOLLOWING CONNECTIONS:
   a. OVERSIZED HOLES
   b. AT SLOTTED HOLES WHERE FORCE IS IN DIRECTION OF SLOTS
   c. COLUMN SPLICES
   d. CONNECTIONS WITH FASTENERS NOTED AS TYPE A325-SC OR A490-SC

10. FOR THE DESIGN OF SLIP-CRITICAL CONNECTIONS, USE BOLT VALUES FOR A CLASS "A" SURFACE (CLEAN MILL SCALE), REGARDLESS OF CLEANING AND OR FINISHES THAT EXCEED THE CLASS "A" REQUIREMENTS.

11. PERFORM ALL WELDING BY ELECTRIC ARC METHOD IN ACCORDANCE WITH THE AWS STRUCTURAL WELDING CODE D1.1. WELDING ELECTRODE SHALL BE LOW HYDROGEN E70XX.

12. THE BEARING ENDS OF ALL COLUMNS SHALL BE FINISHED.

13. STEEL SURFACES TO BE ENCASED IN CONCRETE OR TO RECEIVE SPRAYED-ON FIREPROOFING; SHALL NOT BE PAINTED.

SLAB-ON-GROUND

1. SLABS ON GRADE SHALL REST ON A MINIMUM OF 6 INCHES OF COMPACTED GRANULAR MATERIAL OVER COMPACTED SUB GRADE. REFER TO PLAN FOR THICKNESS OF SLABS.

2. PROVIDE 2-#5 x 4'-0" LONG DIAGONAL TOP BARS AT ALL RE-ENTRANT CORNERS AROUND GRADE WALLS, PITS AND SLAB HOLD DOWNS.

3. REFER TO ARCHITECTURAL DRAWINGS FOR LOCATION AND DETAILS OF SLAB HOLD DOWNS FOR FLOOR FINISHES AND SLOPED FLOOR PROFILES AROUND FLOOR DRAINS, SUMPS, ENTRY DOORS, ETC.

4. REFER TO CIVIL DRAWINGS FOR SIZE AND LOCATION OF EXISTING UNDER SLAB PIPING AND OTHER UTILITIES AND STRUCTURES TO REMAIN OR TO BE ABANDONED IN PLACE.

5. REFER TO MECHANICAL AND ELECTRICAL DRAWINGS FOR SIZE AND LOCATION OF UNDER SLAB AND EMBEDDED PIPING, PLUMBING, FLOOR DRAINS, DUCTS, CONDUIT, ETC.

6. DO NOT LOAD SLABS ON GRADE WITH ERECTION CRANES OR ERECTION EQUIPMENT. SLABS HAVE NOT BEEN DESIGNED FOR CRANE LOADS AND WILL REQUIRE TEMPORARY CRIBBING OR OTHER MEANS TO DISTRIBUTE CONCENTRATED LOADS. OBTAIN ENGINEER'S APPROVAL ON PROPOSED CRANE SUPPORT PLAN FOR SLABS PRIOR TO COMMENCING WORK.

7. SUBGRADE MODULUS FOR SLABS ON GROUND = 100 PCI

SHOP DRAWINGS & DEFERRED SUBMITTALS

1. SHOP DRAWINGS AND DATA SUBMITTALS SHALL BE SUBMITTED FOR THE FOLLOWING STRUCTURAL ITEMS IN ADDITION TO ANY ITEMS REQUIRED BY THE DEFERRED SUBMITTALS (LISTED BELOW):

   A. COMPACTION TEST RESULTS
   B. CONCRETE MIX DESIGN
   C. CONCRETE PRODUCT DATA MATERIALS TEST REPORTS
   D. FOUNDATION REINFORCING (DRAWINGS AND PRODUCT DATA)
   E. STRUCTURAL STEEL (DRAWINGS AND PRODUCT DATA)
   F. COLD FORMED STEEL FRAMING (PRODUCT DATA AND CERTIFICATIONS)
   G. POST INSTALLED ANCHORS (INCLUDING CURRENT ER REPORT)
   H. STEEL DECK (PRODUCT DATA, ERECTION SCHEDULE, & ATTACHMENT SCHEDULE)

2. SHOP DRAWINGS SHALL BE SUBMITTED TO THE STRUCTURAL ENGINEER FOR REVIEW. NO MODIFICATIONS OR SUBSTITUTION OF DRAWINGS AND SPECIFICATIONS WILL BE ACCEPTED VIA SHOP DRAWING REVIEW. REVIEWING IS INTENDED ONLY AS AN AID TO THE CONTRACTOR IN OBTAINING CORRECT SHOP DRAWINGS. RESPONSIBILITY FOR CORRECTNESS AND COMPLETENESS RESTS SOLELY WITH THE CONTRACTOR.

3. ANY CHANGES, SUBSTITUTIONS, OR DEVIATIONS FROM THE ORIGINAL CONTRACT DRAWINGS SHALL BE CLOUDED BY THE MANUFACTURER OR FABRICATOR. ANY CHANGES, SUBSTITUTIONS, OR DEVIATIONS WHICH ARE NOT CLOUDED OR FLAGGED BY SUBMITTING PARTIES, SHALL NOT BE CONSIDERED ALLOWED AFTER THE ENGINEER'S REVIEW, UNLESS NOTED ACCORDINGLY BY THE STRUCTURAL ENGINEER.

4. CONTRACTOR SHALL REVIEW AND STAMP SHOP DRAWINGS PRIOR TO SUBMISSION TO THE STRUCTURAL ENGINEER. CONTRACTOR SHALL REVIEW FOR COMPLETENESS AND COMPLIANCE WITH CONTRACT DOCUMENTS. CONTRACTOR SHALL CLOUD OR FLAG ALL ITEMS NOT IN ACCORDANCE WITH THE CONTRACT DOCUMENTS.

5. SUBMIT SHOP DRAWINGS TO THE STRUCTURAL ENGINEER AS INDICATED OR SPECIFIED FOR REVIEW PRIOR TO FABRICATION. REVIEW WILL BE FOR GENERAL CONFORMANCE WITH DESIGN INTENT CONVEYED IN CONTRACT DOCUMENTS.

6. WHEN AN ENGINEER IS REQUIRED TO SIGN AND STAMP SHOP DRAWINGS AND CALCULATIONS, ENSURE THE STRUCTURAL ENGINEER IS REGISTERED IN THE STATE OF THE LOCAL JURISDICTION.

7. SHOP DRAWINGS ARE NOT PART OF CONTRACT DOCUMENTS. THEREFORE, STRUCTURAL ENGINEER'S REVIEW DOES NOT CONSTITUTE AN AUTHORIZATION TO DEVIATE FROM TERMS AND CONDITIONS OF THE CONTRACT. IT IS THE CONTRACTOR'S RESPONSIBILITY TO ENSURE THAT ITEMS OMITTED OR SHOWN INCORRECTLY ARE CONSTRUCTED IN ACCORDANCE WITH THE ORIGINAL CONTRACT DRAWINGS.

8. SHOP DRAWINGS WILL BE REJECTED FOR INCOMPLETENESS, LACK OF COORDINATION WITH OTHER PORTIONS OF CONTRACT DOCUMENTS, LACK OF CALCULATIONS (IF REQUIRED), OR WHERE MODIFICATIONS OR SUBSTITUTIONS ARE INDICATED WITHOUT PRIOR REVIEW PER PARAGRAPH ABOVE.

9. SUBMIT SHOP DRAWINGS AND CALCULATIONS TO GOVERNING CODE AUTHORITY WHEN SPECIFICALLY INDICATED OR REQUESTED.

10. MAINTAIN A COPY OF ALL SHOP DRAWINGS ACCEPTED BY THE STRUCTURAL ENGINEER AT SITE DURING CONSTRUCTION PERIOD.

11. STRUCTURAL ENGINEER REQUIRES 10 WORKING DAYS AFTER RECEIPT OF SHOP DRAWINGS AND CALCULATIONS FOR PROCESSING.

12. THE STRUCTURAL ENGINEER RESERVES THE RIGHT TO ALLOW OR NOT ALLOW ANY CHANGES TO THE ORIGINAL CONTRACTOR DRAWINGS AT ANY TIME BEFORE OR AFTER SHOP DRAWING REVIEW.

13. DEFERRED SUBMITTALS - SHOP DRAWING SUBMITTALS THAT ARE SUBMITTED DURING CONSTRUCTION AND REQUIRED BY THE GENERAL STRUCTURAL NOTES WHICH CONTAIN DESIGN CALCULATIONS AND SEALS BY A REGISTERED ENGINEER OTHER THAN THE ENGINEER OF RECORD, SHALL BE REVIEWED BY THE ENGINEER OF RECORD AND DETERMINED TO BE IN GENERAL CONFORMANCE WITH THE BUILDING DESIGNED AND SO STATED ON THE SUBMITTAL. DEFERRED SUBMITTAL ITEMS SHALL NOT BE INSTALLED UNTIL THEIR DESIGN AND SUBMITTAL DOCUMENTS HAVE BEEN APPROVED BY THE BUILDING OFFICIAL.

14.DEFERRED SUBMITTALS SHALL INCLUDE THE FOLLOWING:

A. PRE-MANUFACTURED STEEL STAIRS
B. PRE-ENGINEERED METAL BUILDING
C. PRE-ENGINEERED METAL CANOPY

SPREAD FOOTINGS AND MAT FOUNDATIONS

1. ALL FOOTINGS AND MATS SHALL BEAR ON UNDISTURBED VIRGIN SOIL OR ENGINEERED FILL. IF EXISTING FILL MATERIAL IS ENCOUNTERED AT BEARING ELEVATION, REMOVE FILL, TEST SOIL AND REPLACE WITH ENGINEERED FILL OR LEAN CONCRETE TO ACHIEVE REQUIRED BEARING CAPACITY. ENGINEERED FILL SHALL BE PLACED UNDER THE DIRECT SUPERVISION OF GEOTECHNICAL CONSULTANT. TEST BEARING STRATUM PER SPECIFICATIONS.
   a. SPREAD FOOTINGS SHALL HAVE A MINIMUM NET ALLOWABLE BEARING CAPACITY OF 2.0 KSF.
   b. GRADE BEAMS, STRIP FOOTINGS AND RETAINING WALLS SHALL HAVE A MINIMUM NET ALLOWABLE BEARING CAPACITY OF 3 KSF.
2. PROVIDE AS-BUILT DRAWINGS SHOWING ACTUAL BOTTOM ELEVATION OF FOOTINGS AND OTHER APPROVED DEVIATIONS FROM THE DRAWINGS IN ACCORDANCE WITH THE SPECIFICATIONS.
3. REFER TO CIVIL DRAWINGS AND TO SPECIFICATIONS FOR EXCAVATION, BACKFILLING, GRADING AND COMPACTION REQUIREMENTS AND FOR DETAILS OF EXISTING SITE CONDITIONS.
4. FOUNDATION DESIGN CRITERIA IS ON GEOTECHNICAL ENGINEERING SERVICE REPORT BY GEOTECHNOLOGIES INC. DATED DECEMBER 7, 2021.
5. FROST DEPTH IS 1' - 6" BELOW FINISH GRADE.

CLIENT

Rolesville
Genuine Community • Capital Connection
Est. 1837

ISSUES

ISSUE	ISSUANCE	DATE
A	OWNER REVIEW SET	05/05/2022
0	BUILDING PERMIT & BID SET	07/01/2022

CONSULTANTS

WITHERS RAVENEL

WithersRavenel
Engineers | Planners | Surveyors

SEAL

NORTH CAROLINA PROFESSIONAL SEAL 047765 ENGINEER PETER J. IKLEY

DATE: 07/01/2022

PRIME CONSULTANT

IBI GROUP
421 Fayetteville Street, Suite 1609
Raleigh, NC 27601, USA
tel 919 851 4211
ibigroup.com

PROJECT

ROLESVILLE PUBLIC WORKS

805 E. YOUNG STREET
ROLESVILLE NC

PROJECT NO: 135941	
DRAWN BY: **PM**	CHECKED BY: **PI**
PROJECT MGR: **MH**	APPROVED BY: **RA**
SCALE:	DATE: **07/01/2022**

SHEET TITLE

GENERAL NOTES

SHEET NUMBER	ISSUE
S003	0

BIM 360://135941-Rolesville_Public_Works R2020/135941-Rolesville-STRU_v20.rvt

SCALE CHECK 1 in | 1mm

2022-06-30 3:39:04 PM

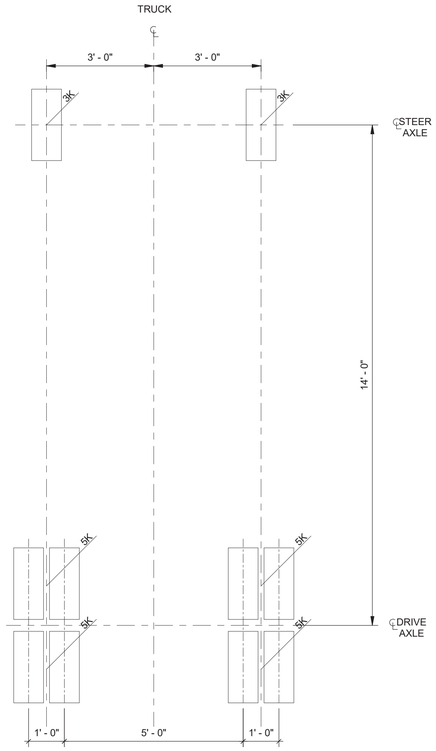

2 S004 TRUCK LOADING DIAGRAM
Scale: 1/2" = 1'-0"

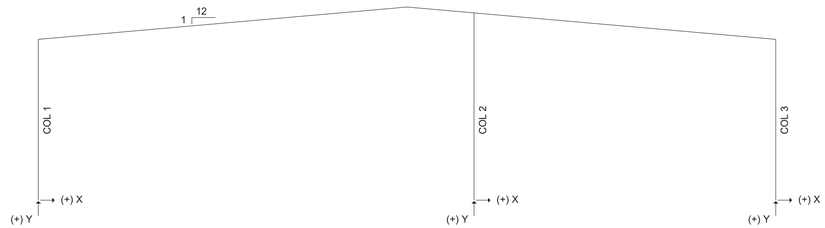

COLUMN BASE UNFACTORED REACTIONS (kips)									
COL	RDL		RLL		W1L		W1R		SEISMIC
	X	Y	X	Y	X	Y	X	Y	X
1	11.9	17.5	22.5	28.3	-16.3	-18.9	-16.3	-18.9	+/-18.0
2	-0.5	16.9	-0.8	32.4	0	-21.1	0	-21.1	+/-17.5
3	-11.9	17.5	-22.5	28.3	27.7	-24.0	-27.7	-24.0	+/-18.0

NOTE:
THE METAL BUILDING REACTIONS HAVE BEEN ESTIMATED FOR THE PURPOSED OF DESIGNING THE FOUNDATIONS SHOWN IN THE STRUCTURAL DRAWINGS. CONTRACTOR TO SUBMIT FINAL METAL BUILDING REACTIONS TO ENGINEER OF RECORD FOR REVIEW. FOUNDATION MAY REQUIRE REDESIGN IF SUBMITTED REACTIONS ARE GREATER THAN THOSE PUBLISHED HEREIN.

1 S004 PEMB FOUNDATION REACTIONS
Scale: 3/32" = 1'-0"

PRE-ENGINEERED METAL BUILDING

DESIGN CRITERIA

PEMB DEAD LOAD CRITERIA

METAL PANEL	BY MFR
FRAMING	BY MFR
INSULATION	4.0 PSF
UTILITIES	10.0 PSF

PEMB LIVE LOAD CRITERIA

ROOF LIVE LOAD	20.0 PSF

PEMB SEISMIC DESIGN CRITERIA

RISK CATEGORY	II
IMPORTANCE FACTOR	1
SPECTRAL RESPONSE ACCELERATION, Ss	0.320g
SPECTRAL RESPONSE ACCELERATION, S1	0.148g
SITE CLASS	B
DESIGN SPECTRAL RESPONSE ACCELERATION, SDs	0.213g
DESIGN SPECTRAL RESPONSE ACCELERATION, SD1	0.099g
BASIC SEISMIC FORCE RESISTING SYSTEM	BY MFR
DESIGN BASE SHEAR, V	BY MFR
SEISMIC RESPONSE COEFFICIENT, Cs	BY MFR
RESPONSE MODIFICATION COEFFICIENT, R	BY MFR
ANALYSIS PROCEDURE	BY MFR

PEMB SNOW DESIGN CRITERIA

RISK CATEGORY	II
IMPORTANCE FACTOR, Is	1
GROUND SNOW LOAD, Pg	15.0 PSF
EXPOSURE FACTOR, Ce	0.9
THERMAL FACTOR, Ct	1
FLAT ROOF SNOW LOAD, Pf	BY MFR
MINIMUM SNOW LOAD, Pm	BY MFR

PEMB WIND LOAD CRITERIA

RISK CATEGORY	II
IMPORTANCE FACTOR, Iw	1
BASIC WIND SPEED, V	115 MPH
EXPOSURE CATEGORY	C
INTERNAL PRESSURE COEFFICIENT, GCpi	0.18
WIND DIRECTIONALITY FACTOR	0.85
TOPOGRAPHIC FACTOR, Kzt	1
ENCLOSURE CLASSIFICATION	PARTIALLY OPEN
WIND PRESSURES	BY MFR

BUILDING AND DESIGN CODES

1. 2018 NC STATE BUILDING CODE
2. AISC 360-10 SPECIFICATION FOR STRUCTURAL STEEL BUILDINGS (14th EDITION STRUCTURAL STEEL MANUAL)
3. AISI S100-12 : NORTH AMERICAN SPECIFICATION FOR THE DESIGN OF COLD-FORMED STEEL STRUCTURAL MEMBERS.
4. AWS STRUCTURAL STEEL WELDING CODE D1.4-2011
5. ACI 318-14 BUILDING CODE REQUIREMENTS FOR STRUCTURAL CONCRETE
6. ACI DETAILING MANUAL, 2004
7. CRSI MANUAL OF STANDARD PRACTICE, 2008
8. SDI CODE OF RECOMMENDED STANDARD PRACTICE FOR COMPOSITE DECK CONSTRUCTION, C-2017
9. ASCE 7-10, MINIMUM DESIGN LOADS FOR BUILDINGS AND OTHER STRUCTURES, BY AMERICAN SOCIETY OF CIVIL ENGINEERS.

LOAD LEGEND & DESIGN LOAD COMBINATIONS

D = DEAD LOAD
E = EARTHQUAKE LOAD
L = LIVE LOAD
Lr = ROOF LIVE LOAD
R = RAIN LOAD
S = SNOW LOAD
W = WIND LOAD

STRENGTH COMBINATIONS (LRFD):
- 1.4D
- 1.2D + 1.6L + 0.5(Lr or S or R)
- 1.2D + 1.6(Lr or S or R) + (L or 0.5W)
- 1.2D + 1.0W + L + 0.5(Lr or S or R)
- 1.2D + 1.0E + L + 0.2s
- 0.9D + 1.0W
- 0.9D + 1.0E

SERVICE COMBINATIONS (ASD):
- D
- D + L
- D + (Lr or S or R)
- D + 0.75L + 0.75(Lr or S or R)
- D + (0.6W or 0.7E)
- D + 0.75L + 0.75(0.6W) + 0.75(Lr or S or R)
- D + 0.75L + 0.75(0.7E) + 0.75S
- 0.6D + 0.6W
- 0.6D + 0.7E

DRIFT COMBINATIONS
- 0.6D + 0.6(0.7)W

MEZZANINE DEFLECTION CRITERIA

FLOOR MEMBERS:
- LIVE LOAD DEFLECTION ≤ L/240
- TOTAL LOAD DEFLECTION ≤ L/240

MEZZANINE DRIFT CRITERIA

SEISMIC DRIFT ≤ 0.025H

MEZZANINE DESIGN CRITERIA

DEAD LOAD CRITERIA

3-1/2" LW on 1-1/2" METAL DECK	35.0 PSF
STEEL FRAMIN	SELF WT
MEP	5.0 PSF
TOTAL DEAD	40.0 PSF + SELF WT

LIVE LOAD CRITERIA

SLAB-ON-GRADE:

UNIFORM LOAD	250.0 PSF
OFFICE	50.0 PSF
LIGHT STORAGE	125.0 PSF

SEISMIC DESIGN CRITERIA

RISK CATEGORY	II
IMPORTANCE FACTOR, Ie	1.0
SPECTRAL RESPONSE ACCELERATION, Ss	0.320g
SPECTRAL RESPONSE ACCELERATION, S1	0.148g
SITE CLASS	B
DESIGN SPECTRAL RESPONSE ACCELERATION, SDs	0.213g
DESIGN SPECTRAL RESPONSE ACCELERATION, SD1	0.099g
SEISMIC DESIGN CATEGORY	B
BASIC SEISMIC FORCE RESISTING SYSTEM	STEEL SYSTEMS NOT SPECIFICALLY DETAILED FOR SEISMIC RESISTANCE
DESIGN BASE SHEAR, V	172.3 k
SEISMIC RESPONSE COEFFICIENT, Cs	0.04
RESPONSE MODIFICATION COEFFICIENT, R	3.0
ANALYSIS PROCEDURE	EQUIVALENT LATERAL FORCE ANALYSIS

CLIENT
Rolesville
Genuine Community • Capital Connection
Est. 1837

ISSUES

ISSUE	ISSUANCE	DATE
A	OWNER REVIEW SET	05/05/2022
0	BUILDING PERMIT & BID SET	07/01/2022

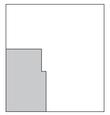

CONSULTANTS
WITHERS RAVENEL
WithersRavenel
Engineers | Planners | Surveyors

SEAL
NORTH CAROLINA PROFESSIONAL SEAL 047766 ENGINEER
DATE: 07/01/2022

PRIME CONSULTANT
IBI
IBI GROUP
421 Fayetteville Street, Suite 1609
Raleigh, NC 27601, USA
tel 919 851 4211
ibigroup.com

PROJECT
ROLESVILLE PUBLIC WORKS
805 E. YOUNG STREET
ROLESVILLE NC

PROJECT NO: 135941

DRAWN BY: PM	CHECKED BY: PI
PROJECT MGR: MH	APPROVED BY: RA
SCALE: As indicated	DATE: 07/01/2022

SHEET TITLE
DESIGN CRITERIA

SHEET NUMBER S004
ISSUE 0

BIM 360://135941-Rolesville_Public_Works R2020/135941-Rolesville-STRU_v20.rvt

SCALE CHECK 10mm 1 in

2022-06-30 3:39:05 PM

FOOTING SCHEDULE					
	SIZE			REINFORCING	
FOOTING MARK	LENGTH (b)	WIDTH(d)	THICKNESS	TOP	BOTTOM
F1	4' - 0"	4' - 0"	1' - 6"	(4) - #6 EW	(4) - #6 EW
F2	6' - 6"	6' - 6"	1' - 6"	(6) - #6 EW	(6) - #6 EW
F3	7' - 0"	5' - 0"	2' - 0"	(10) - #6 EW	(10) - #6 EW
F4	8' - 0"	8' - 0"	2' - 0"	(10) - #6 EW	(10) - #6 EW
F5	9' - 0"	9' - 0"	2' - 0"	(11) - #6 EW	(11) - #6 EW
F6	9' - 0"	11' - 6"	2' - 0"	(14) - #6 EW	(14) - #6 EW

TYPICAL FOUNDATION PLAN NOTES:

1. FINISH FLOOR EL = 0'-0" UON. SEE CIVIL DWGS FOR ACTUAL USGS SITE ELEVATIONS.
2. TOP OF FOOTING ELEVATIONS = -1'-6" FROM FINISH FLOOR ELEVATION UON
3. TYPICAL CONCRETE SLAB ON GROUND: 6" FIBER REINFORCED CONCRETE SLAB ON GROUND ON 6" MIN ENGR'D FILL WITH LIQUID HARDENER FINISH. REFER TO GENERAL NOTES AND GEOTECH REPORT FOR ADDITIONAL REQUIREMENTS AND INFORMATION.
4. FX INDICATES SPREAD FOOTING MARK. SEE FOUNDATION PLAN AND SCHEDULE FOR ADDITIONAL INFORMATION.
5. PROVIDE (2) #5 x 48" LONG SLAB BARS CENTERED AT ALL SLAB RE-ENTRANT CORNERS TYP.
6. CONTRACTOR SHALL VERIFY LOCATIONS OF ALL EXISTING UNDERGROUND UTILITIES AND STRUCTURES PRIOR TO EXCAVATION WORK COMMENCING.
7. CONTRACTOR SHALL COORD ALL PIPE SLEEVES, EMBEDDED CONDUITS, GROUNDING CABLES, DEPRESSIONS, ETC. W/ ARCH & MEP DWGS PRIOR TO CONCRETE PLACEMENT.
8. "CJ" INDICATES CONTRACTION JOINTS - GC TO COORDINATE.SEE PLAN FOR CJ LAYOUT.
9. PROVIDE CONTINUOUS 3/4" CHAMFER AT ALL EXPOSED CONCRETE EDGES.
10. SEE DRAWINGS S002, 003, 006 FOR STRUCTURAL GENERAL NOTES, AND DESIGN CRITERIA.
11. SEE DRAWINGS S-300 FOR APPLICABLE TYPICAL STRUCTURAL FOUNDATION AND CONCRETE DETAILS NOT CUT ON FOUNDATION PLANS.
12. FOUNDATIONS FOR PRE-ENGINEERED BUILDINGS SHALL NOT BE PLACED UNTIL THE DESIGN LOADS AND ANCHOR ROD SIZES AND ARRANGEMENT HAVE BEEN SUBMITTED ON SHOP DRAWINGS AND REVIEWED.

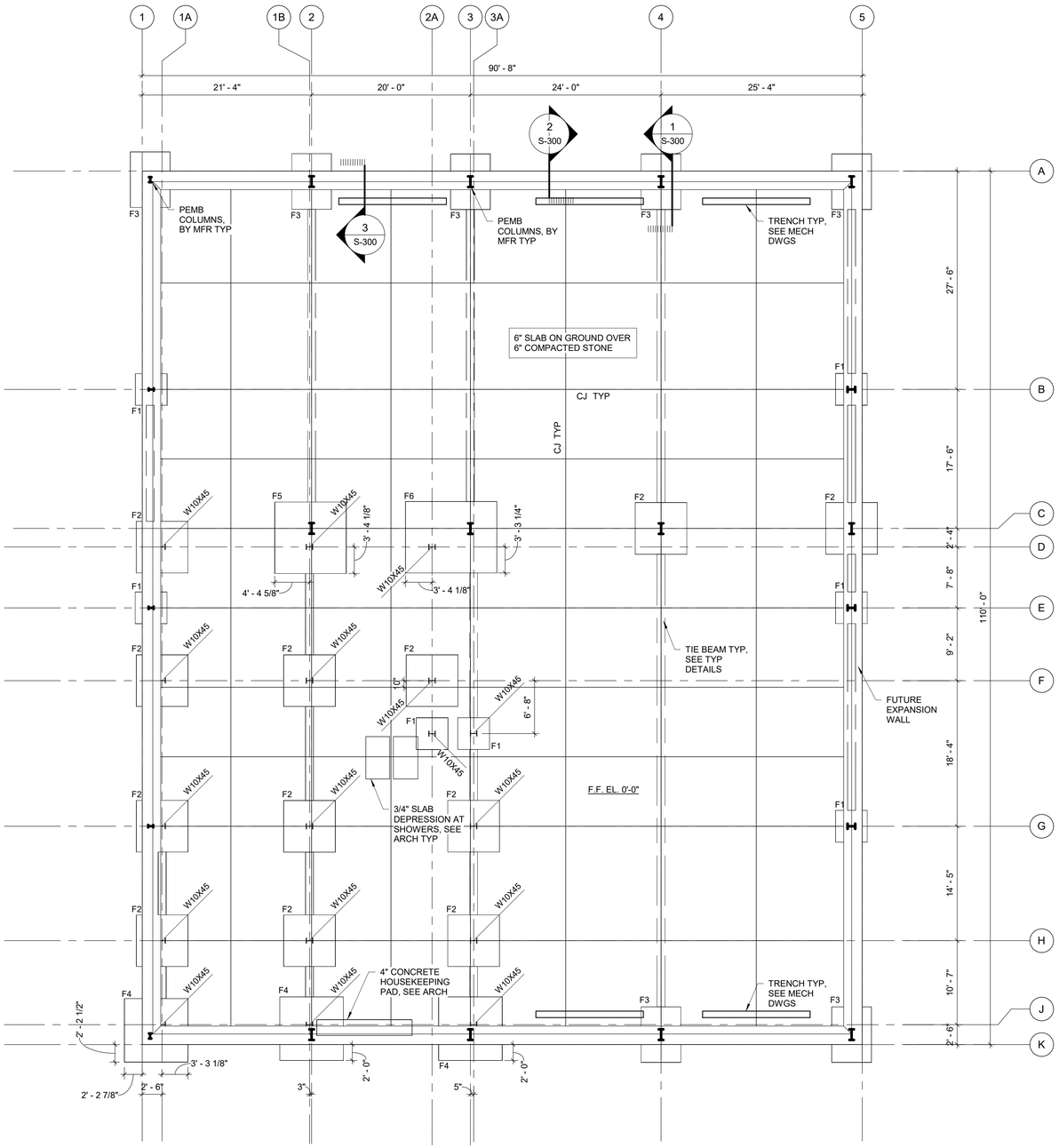

1 / S101 FOUNDATION PLAN
Scale: 1/8" = 1'-0"

CLIENT

Rolesville
Genuine Community • Capital Connection
Est. 1837

ISSUES

ISSUE	ISSUANCE	DATE
A	OWNER REVIEW SET	05/05/2022
0	BUILDING PERMIT & BID SET	07/01/2022

KEYPLAN

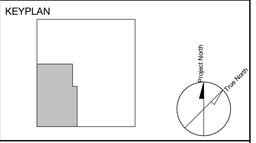

CONSULTANTS

WITHERS RAVENEL

WithersRavenel
Engineers | Planners | Surveyors

SEAL

DATE: 07/01/2022

PRIME CONSULTANT

IBI GROUP
421 Fayetteville Street, Suite 1609
Raleigh, NC 27601, USA
tel 919 851 4211
ibigroup.com

PROJECT

ROLESVILLE PUBLIC WORKS

805 E. YOUNG STREET
ROLESVILLE NC

PROJECT NO: 135941	
DRAWN BY: **PM**	CHECKED BY: **PI**
PROJECT MGR: **MH**	APPROVED BY: **RA**
SCALE: **As indicated**	DATE: **07/01/2022**

SHEET TITLE

STRUCTURAL FOUNDATION PLAN

SHEET NUMBER	ISSUE
S101	0

BIM 360://135941-Rolesville_Public_Works R2020/135941-Rolesville-STRU_v20.rvt

SCALE CHECK: 1 in | 10mm

2022-06-30 3:39:05 PM

TYPICAL MEZZANINE FLOOR FRAMING PLAN NOTES:

1. SEE ALL S00 SHEETS FOR GENERAL NOTES, ABBREVIATIONS, AND DESIGN CRITERIA.
2. SEE S-502 & S-503 SHEETS FOR TYPICAL STEEL DETAILS.
3. "D-1" INDICATES - 1 1/2" DEEP DECK 20GA 50 ksi COMPOSITE METAL DECK W/ 3 1/2" LIGHTWEIGHT CONCRETE TOPPING (TRIPLE SPAN MIN.) SEE PLAN FOR SPAN DIRECTION. TOP OF FINISHED FLOOR IS 12' - 0". SEE ARCH DRAWINGS.
4. ▶ INDICATES MOMENT CONNECTION. CONNECTION TO BE DESIGNED FOR THE BELOW (ASD) REACTIONS:
   W12x22 M = 35 k-ft
   W18x35 M = 105 k-ft
5. USE (ASD) REACTIONS SHOWN BELOW AT ALL BEAM SHEAR END CONNECTIONS:
   W12x22 V = 5 k
   W18x35 V = 15 k
6. NUMBER OF 3/4" DIA x 4" LONG STUD SHEAR CONNECTORS ON TOP FLANGE OF BEAM IS NOTED BY (xx) ON PLAN.
7. TOP OF STEEL ELEVATION FOR ALL BEAMS SHOULD BE 11' - 7" UNLESS NOTED OTHERWISE.

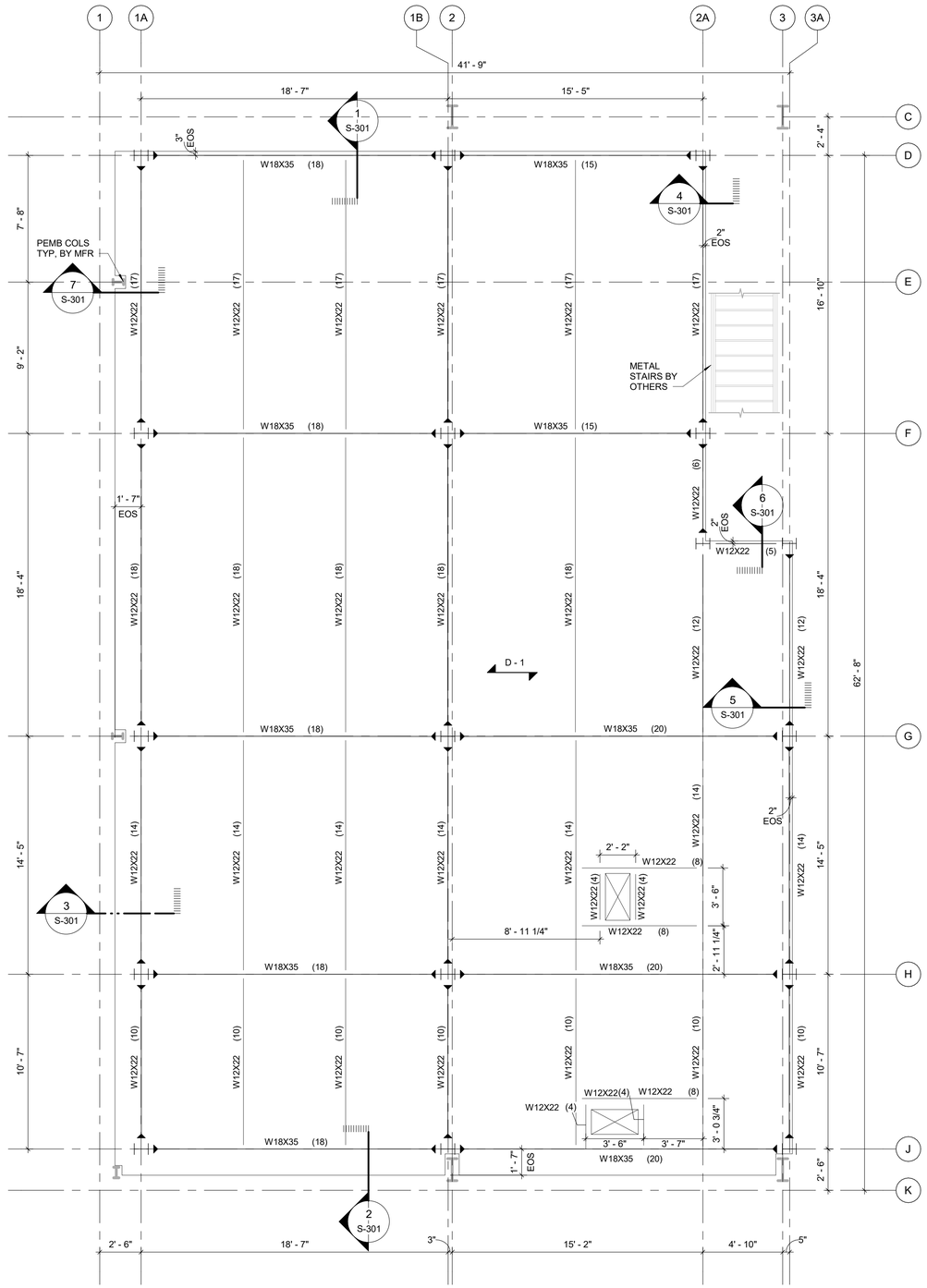

2 / S102 MEZZANINE FRAMING PLAN
Scale: 1/4" = 1'-0"

CLIENT

Rolesville
Genuine Community • Capital Connection
Est. 1837

ISSUES

ISSUE	ISSUANCE	DATE
A	OWNER REVIEW SET	05/05/2022
0	BUILDING PERMIT & BID SET	07/01/2022

KEYPLAN

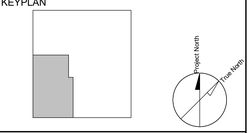

CONSULTANTS

WITHERS RAVENEL

WithersRavenel
Engineers | Planners | Surveyors

SEAL

NORTH CAROLINA PROFESSIONAL SEAL 047766 ENGINEER ROBERT C. HACK

DATE: 07/01/2022

PRIME CONSULTANT

IBI

IBI GROUP
421 Fayetteville Street, Suite 1609
Raleigh, NC 27601, USA
tel 919 851 4211
ibigroup.com

PROJECT

ROLESVILLE PUBLIC WORKS

805 E. YOUNG STREET
ROLESVILLE NC

PROJECT NO: 135941	
DRAWN BY: **PM**	CHECKED BY: **PI**
PROJECT MGR: **MH**	APPROVED BY: **RA**
SCALE: **As indicated**	DATE: **07/01/2022**

SHEET TITLE

STRUCTURAL FRAMING PLAN

SHEET NUMBER	ISSUE
S102	0

BIM 360:///135941-Rolesville_Public_Works R2020/135941-Rolesville-STRU_v20.rvt

SCALE CHECK 1 in 10mm

2022-06-30 3:39:06 PM

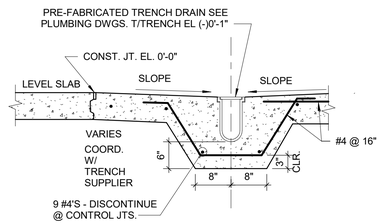

3 / S-300 SECTION AT OVERHEAD DOOR SILL W/ TRENCH

Scale: 3/4" = 1'-0"

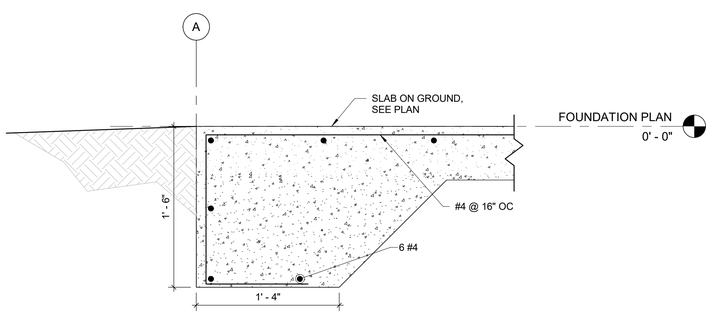

2 / S-300 TYPICAL SLAB EDGE DETAIL

Scale: 1 1/2" = 1'-0"

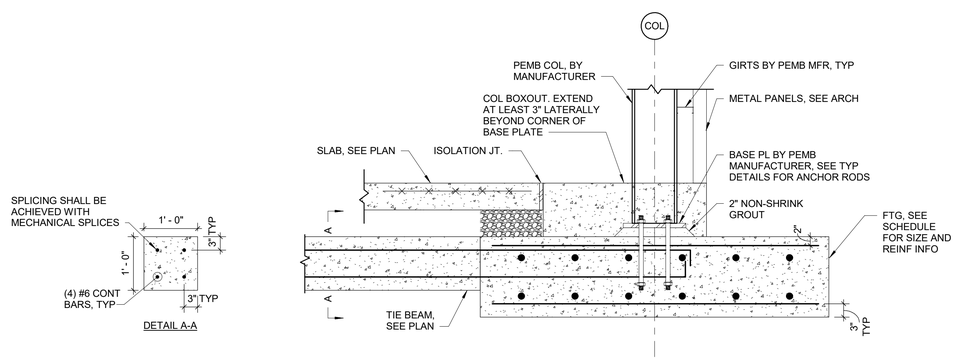

1 / S-300 TYPICAL EXTERIOR COL FTG DETAIL

Scale: 3/4" = 1'-0"

CLIENT

Rolesville
Genuine Community • Capital Connection
Est. 1837

ISSUES

ISSUE	ISSUANCE	DATE
0	BUILDING PERMIT & BID SET	07/01/2022

CONSULTANTS

WITHERS RAVENEL

WithersRavenel
Engineers | Planners | Surveyors

SEAL

NORTH CAROLINA PROFESSIONAL SEAL 047766 ENGINEER FABIO MARTINICK

DATE: 07/01/2022

PRIME CONSULTANT

IBI

IBI GROUP
421 Fayetteville Street, Suite 1609
Raleigh, NC 27601, USA
tel 919 851 4211
ibigroup.com

PROJECT

ROLESVILLE PUBLIC WORKS

805 E. YOUNG STREET
ROLESVILLE NC

PROJECT NO: 135941	
DRAWN BY: **Author**	CHECKED BY: **Checker**
PROJECT MGR: **Designer**	APPROVED BY: **Approver**
SCALE: **As indicated**	DATE: **07/01/2022**

SHEET TITLE

FOUNDATION SECTIONS

SHEET NUMBER S-300

ISSUE 0

BIM 360://135941-Rolesville_Public_Works R2020/135941-Rolesville-STRU_v20.rvt

SCALE CHECK 1 in 10mm

2022-06-30 3:39:06 PM

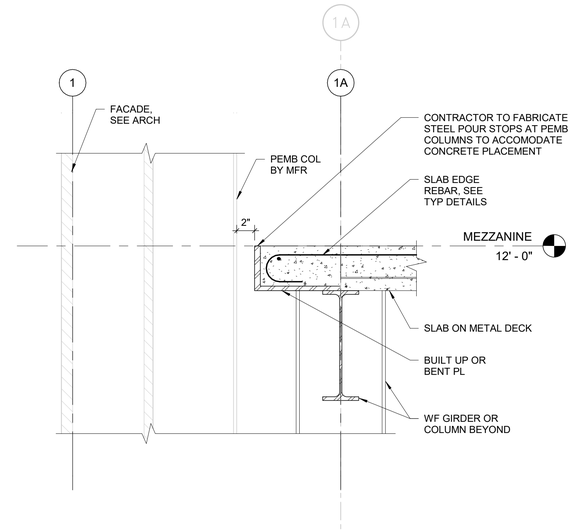

7 S-301 TYP SLAB EDGE AT PEMB END COLUMNS
Scale: 1 1/2" = 1'-0"

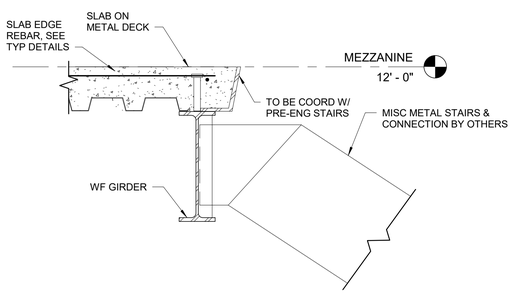

6 S-301 SLAB EDGE AT STRINGER CONNECTION
Scale: 1 1/2" = 1'-0"

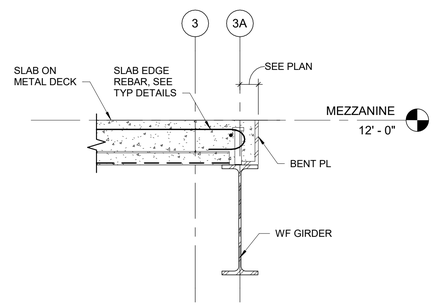

5 S-301 SLAB EDGE ALONG GRID 3A
Scale: 1 1/2" = 1'-0"

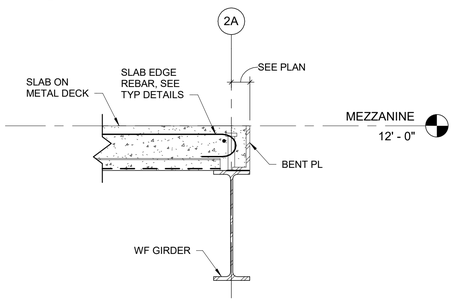

4 S-301 SLAB EDGE ALONG GRID 2A
Scale: 1 1/2" = 1'-0"

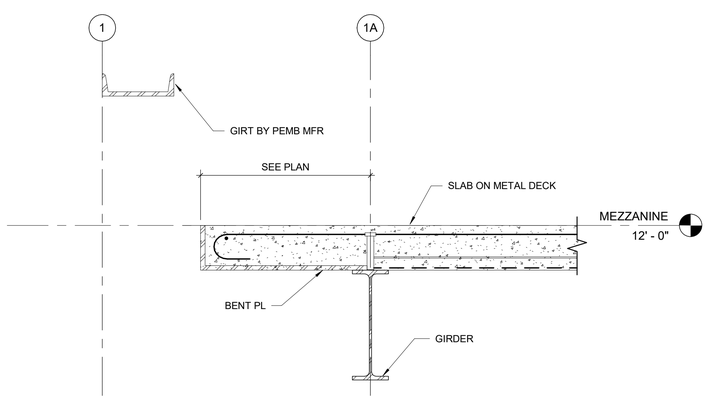

3 S-301 SLAB EDGE ALONG GRID 1A
Scale: 1 1/2" = 1'-0"

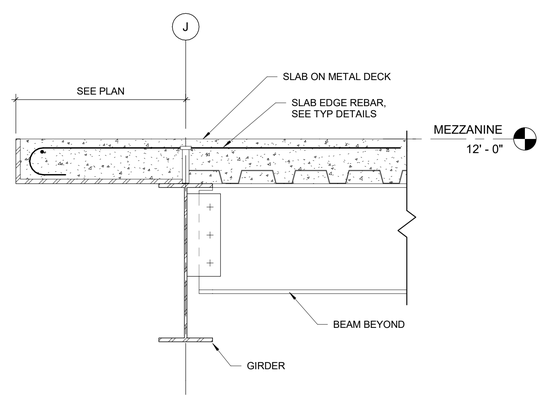

2 S-301 SLAB EDGE ALONG GRID J
Scale: 1 1/2" = 1'-0"

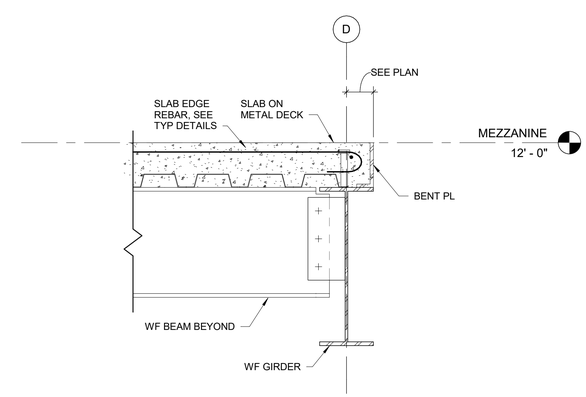

1 S-301 SLAB EDGE ALONG GRID D
Scale: 1 1/2" = 1'-0"

CLIENT

Rolesville
Genuine Community • Capital Connection
Est. 1837

ISSUES

ISSUE	ISSUANCE	DATE
A	OWNER REVIEW SET	05/05/2022
0	BUILDING PERMIT & BID SET	07/01/2022

CONSULTANTS

WITHERS RAVENEL

WithersRavenel
Engineers | Planners | Surveyors

SEAL

NORTH CAROLINA PROFESSIONAL SEAL 047866 ENGINEER ROBERT SLACK

DATE: 07/01/2022

PRIME CONSULTANT

IBI GROUP
421 Fayetteville Street, Suite 1609
Raleigh, NC 27601, USA
tel 919 851 4211
ibigroup.com

PROJECT

ROLESVILLE PUBLIC WORKS

805 E. YOUNG STREET
ROLESVILLE NC

PROJECT NO: 135941	
DRAWN BY: PI	CHECKED BY: PI
PROJECT MGR: SL	APPROVED BY: RA
SCALE: 1 1/2" = 1'-0"	DATE: 07/01/2022

SHEET TITLE

STEEL SECTIONS

SHEET NUMBER S-301

ISSUE 0

2022-06-30 3:39:07 PM

BIM 360://135941-Rolesville_Public_Works R2020/135941-Rolesville-STRU_v20.rvt

SCALE CHECK 1 in | 10mm

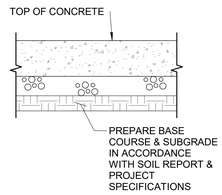

5 / S-501 TYPICAL SLAB DETAIL
Scale: 3/4" = 1'-0"

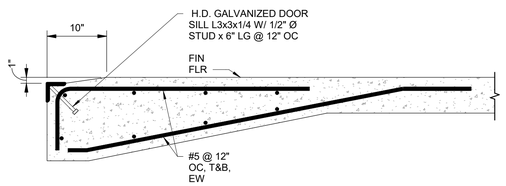

4 / S-501 TYPICAL SLAB DETAIL AT TRUCK DOOR
Scale: 1" = 1'-0"

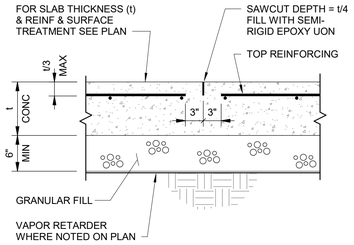

6 / S-501 MANUFACTURING FLOOR - CONTRACTION JOINT
Scale: 1" = 1'-0"

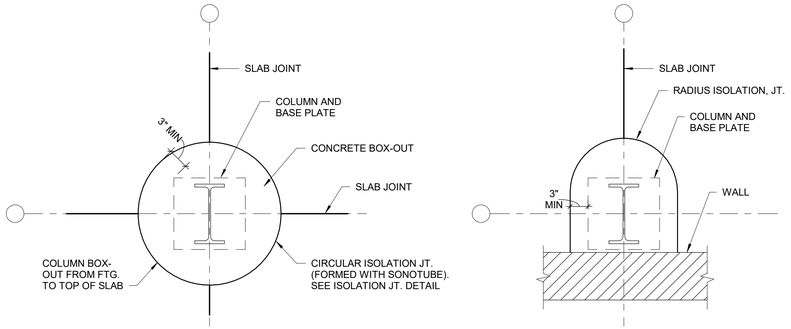

3 / S-501 TYP ISOLATION JOINT DETAIL
Scale: 1" = 1'-0"

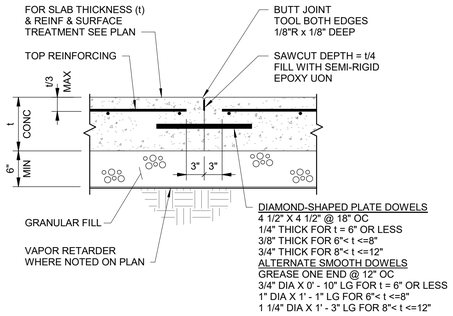

2 / S-501 MANUFACTURING FLOOR - CONSTRUCTION JOINT
Scale: 1" = 1'-0"

CLIENT

Rolesville
Genuine Community • Capital Connection
Est. 1837

ISSUES

ISSUE	ISSUANCE	DATE
A	OWNER REVIEW SET	05/05/2022
0	BUILDING PERMIT & BID SET	07/01/2022

CONSULTANTS

WITHERS RAVENEL

WithersRavenel
Engineers | Planners | Surveyors

SEAL

NORTH CAROLINA PROFESSIONAL SEAL 047766 ENGINEER

DATE: 07/01/2022

PRIME CONSULTANT

IBI GROUP
421 Fayetteville Street, Suite 1609
Raleigh, NC 27601, USA
tel 919 851 4211
ibigroup.com

PROJECT

ROLESVILLE PUBLIC WORKS

805 E. YOUNG STREET
ROLESVILLE NC

PROJECT NO: 135941	
DRAWN BY: PM	CHECKED BY: PI
PROJECT MGR: MH	APPROVED BY: RA
SCALE: As indicated	DATE: 07/01/2022

SHEET TITLE
TYPICAL CONCRETE DETAILS

SHEET NUMBER S-501

ISSUE 0

BIM 360://135941-Rolesville_Public_Works R2020/135941-Rolesville-STRU_v20.rvt

SCALE CHECK 10mm 1 in

2022-06-30 3:39:07 PM

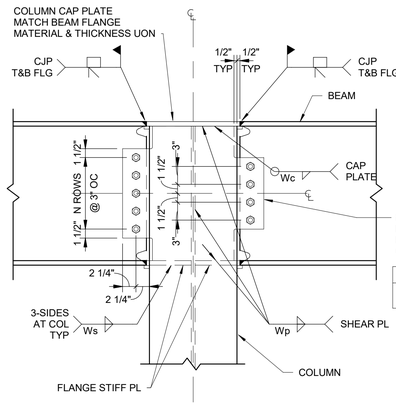

tp = THICKNESS OF SHEAR PLATE (IN)
N = NUMBER OF ROWS OF BEARING BOLTS IN SSLT HOLES
bd = BOLT DIAMETER (IN)
G = ASTM BOLT GROUP

MARK	tp	N	bd	G	Wp	Wc	Ws
MCx	#	#	#	#	#	#	#

5 / S-502 FULLY RESTRAINED MOM CONN - WELDED AT CAP PLATE
Scale: 1" = 1'-0"

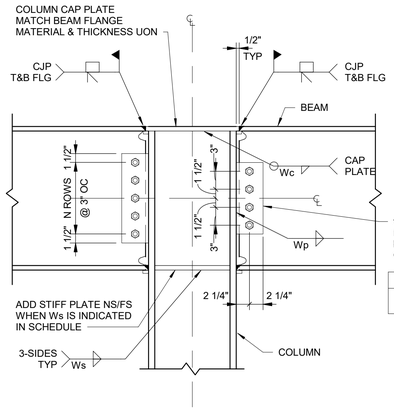

tp = THICKNESS OF SHEAR PLATE (IN)
N = NUMBER OF ROWS OF BEARING BOLTS IN SSLT HOLES
bd = BOLT DIAMETER (IN)
G = ASTM BOLT GROUP

MARK	tp	N	bd	G	Wp	Wc	Ws
MCx	#	#	#	#	#	#	#

4 / S-502 FULLY RESTRAINED MOM CONN - WELDED AT CAP PLATE
Scale: 1" = 1'-0"

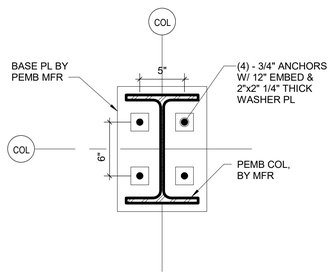

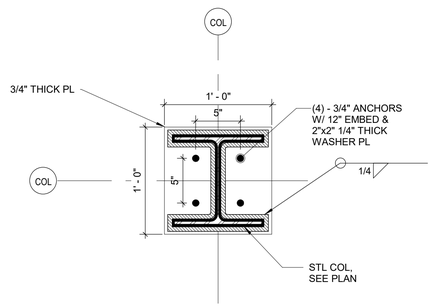

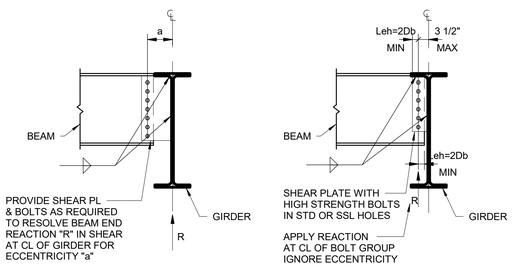

3 / S-502 TYP BEAM TO GIRDER CONN
Scale: 1/2" = 1'-0"

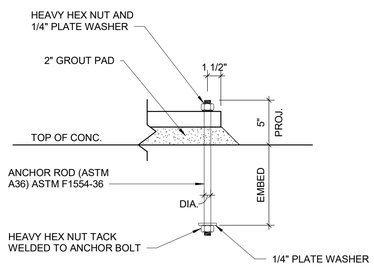

2 / S-502 PEMB BASE PLATE DETAIL
Scale: 1 1/2" = 1'-0"

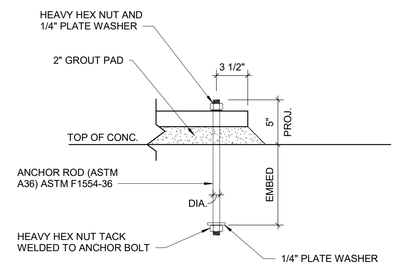

1 / S-502 TYPICAL MEZZANINE BASE PLATE DETAIL
Scale: 1 1/2" = 1'-0"

CLIENT

Rolesville
Genuine Community • Capital Connection
Est. 1837

ISSUES

ISSUE	ISSUANCE	DATE
A	OWNER REVIEW SET	05/05/2022
0	BUILDING PERMIT & BID SET	07/01/2022

CONSULTANTS
WITHERS RAVENEL

WithersRavenel
Engineers | Planners | Surveyors

SEAL

NORTH CAROLINA PROFESSIONAL SEAL 047766 ENGINEER ROBERT A. ACKERMAN

DATE: 07/01/2022

PRIME CONSULTANT

IBI GROUP
421 Fayetteville Street, Suite 1609
Raleigh, NC 27601, USA
tel 919 851 4211
ibigroup.com

PROJECT
ROLESVILLE PUBLIC WORKS
805 E. YOUNG STREET
ROLESVILLE NC

PROJECT NO: 135941	
DRAWN BY: PM	CHECKED BY: PI
PROJECT MGR: MH	APPROVED BY: RA
SCALE: As indicated	DATE: 07/01/2022

SHEET TITLE
TYPICAL STEEL DETAILS

SHEET NUMBER S-502
ISSUE 0

BIM 360://135941-Rolesville_Public_Works R2020/135941-Rolesville-STRU_v20.rvt

SCALE CHECK 1 in | 10mm

2022-06-30 3:39:07 PM

3 / S-503 TYP COMPOSITE FLOOR DECK FASTENING PARALLEL TO SUPPORT1

Scale: 1" = 1'-0"

2 / S-503 TYP FLOOR DECK FASTENING PARALLEL TO SUPPORT

Scale: 1" = 1'-0"

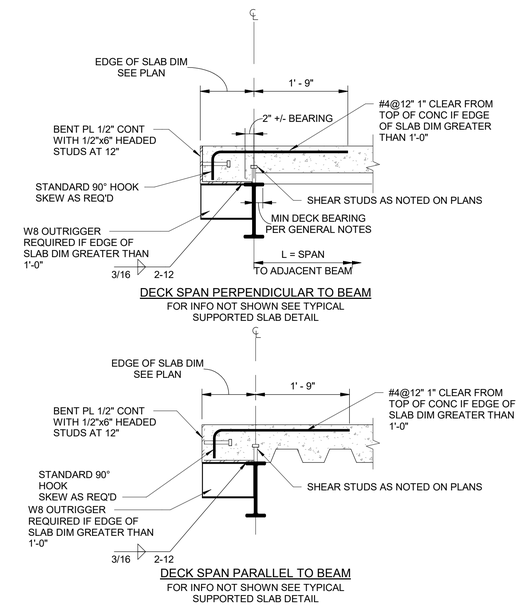

4 / S-503 EDGE OF SLAB DETAIL

Scale: 3/4" = 1'-0"

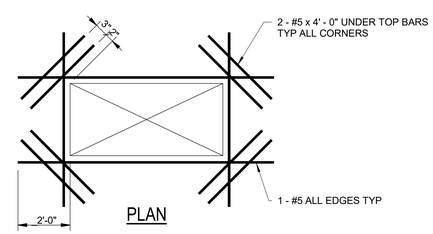

1 / S-503 OPENING IN SLAB ON METAL DECK

Scale: 3/4" = 1'-0"

CLIENT

Rolesville
Genuine Community • Capital Connection
Est. 1837

ISSUES

ISSUE	ISSUANCE	DATE
0	BUILDING PERMIT & BID SET	07/01/2022

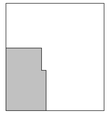

CONSULTANTS

WITHERS RAVENEL

WithersRavenel
Engineers | Planners | Surveyors

SEAL

NORTH CAROLINA PROFESSIONAL SEAL 047756 ENGINEER

DATE: 07/01/2022

PRIME CONSULTANT

IBI

IBI GROUP
421 Fayetteville Street, Suite 1609
Raleigh, NC 27601, USA
tel 919 851 4211
ibigroup.com

PROJECT

ROLESVILLE PUBLIC WORKS

805 E. YOUNG STREET
ROLESVILLE NC

PROJECT NO: 135941	
DRAWN BY: **Author**	CHECKED BY: **Checker**
PROJECT MGR: **Designer**	APPROVED BY: **Approver**
SCALE: **As indicated**	DATE: **07/01/22**

SHEET TITLE

TYPICAL STEEL DETAILS

SHEET NUMBER	ISSUE
S-503	0

BIM 360://135941-Rolesville_Public_Works R2020/135941-Rolesville-STRU_v20.rvt

SCALE CHECK: 1 in 10mm

2022-06-30 3:39:08 PM

AUTOMATIC SPRINKLER SYSTEM DESIGN CRITERIA

SYMBOL	OCCUPANCY HAZARD CLASSIFICATION	DESIGN DENSITY (GPM/SF)	DESIGN AREA
R	RESIDENTIAL (DWELLING) OCCUPANCY	0.05	400 SF
LH	LIGHT HAZARD OCCUPANCY	0.10	1500 SF
OH1	ORDINARY HAZARD, GROUP 1 OCCUPANCY	0.15	1500 SF
OH2	ORDINARY HAZARD, GROUP 2 OCCUPANCY	0.20	1500 SF
EH1	EXTRA HAZARD, GROUP 1 OCCUPANCY	0.30	2500 SF
EH2	EXTRA HAZARD, GROUP 2 OCCUPANCY	0.40	2500 SF
S	SPECIAL HAZARD OCCUPANCY		

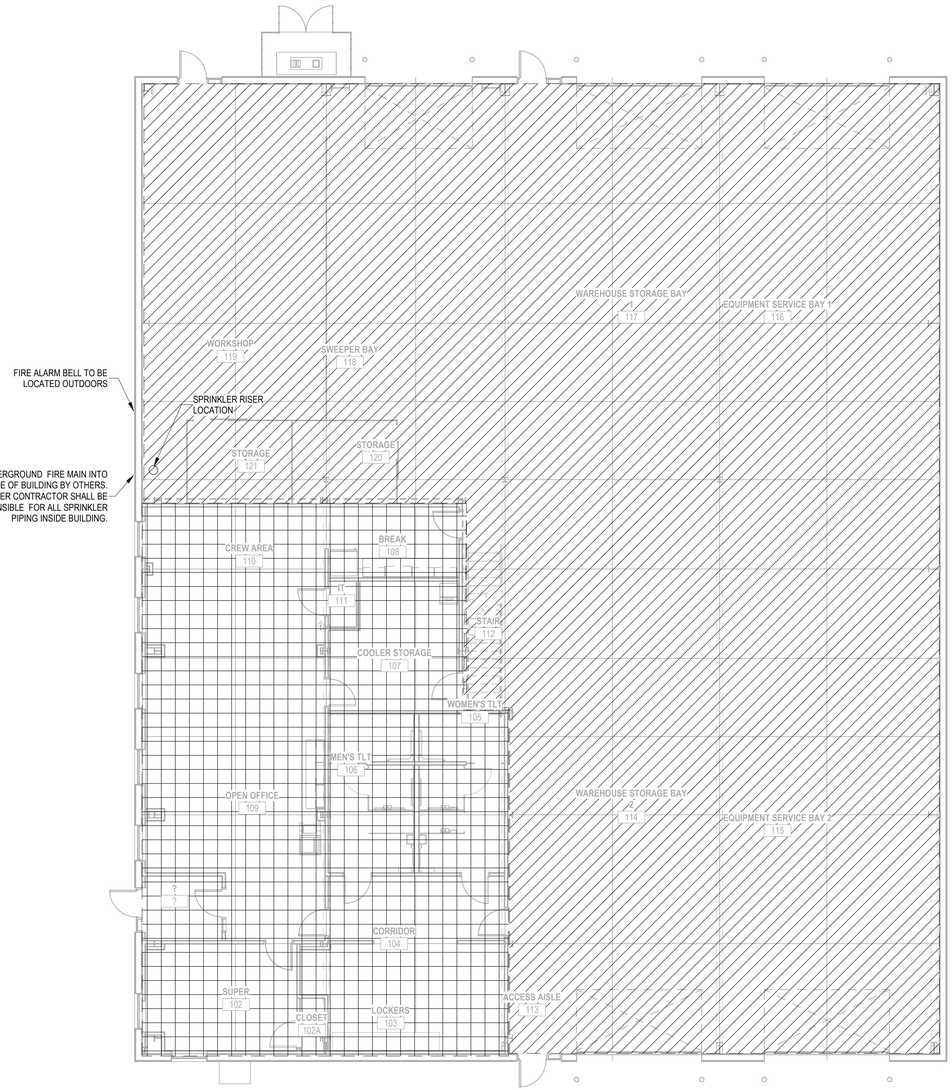

1 FP100 FIRST FLOOR FIRE PROTECTION PLAN
Scale: 1/8" = 1'-0"

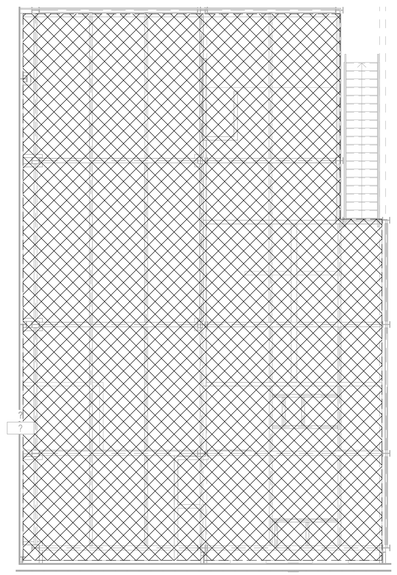

2 FP100 MEZZANINE FIRE PROTECTION PLAN
Scale: 1/8" = 1'-0"

FIRE PROTECTION NOTES

1. THESE CONTRACT DRAWINGS FOR THE FIRE PROTECTION WORK ARE DIAGRAMMATIC, INTENDED TO CONVEY THE SCOPE OF WORK AND TO INDICATE THE GENERAL ARRANGEMENT AND APPROXIMATE LOCATION OF EQUIPMENT, PIPING, AND ACCESSORIES. THE INSTALLING CONTRACTOR SHALL BE RESPONSIBLE FOR CHECKING AND VERIFYING ALL CONDITIONS, DIMENSIONS, AND LOCATIONS PRIOR TO BIDDING PROJECT.
2. SPRINKLER SYSTEM SHALL BE INSTALLED IN STRICT CONFORMITY WITH ALL LATEST REQUIREMENTS OF THE NATIONAL FIRE PROTECTION ASSOCIATION (NFPA-13), LATEST EDITION, AND FM GLOBAL. SPRINKLER CONTRACTOR SHALL VERIFY ALL FM GLOBAL REQUIREMENTS PRIOR TO INSTALLATION.
3. ALL NEW SPRINKLER PIPE SYSTEM SHALL BE MARKED AND IDENTIFIED IN ACCORDANCE WITH NFPA NO. 13. THE PIPE SHALL BE LABELED TO IDENTIFY PIPE. ALL LABELS TEXT SHALL BE 2" IN HEIGHTS AND PLACED ON PIPE WHERE VISIBLE.
4. ALL SPRINKLER MAIN PIPING SHALL BE SCHEDULE 40 STEEL IN ACCORDANCE WITH NFPA 13.
5. PIPE SHALL BE PROTECTED AGAINST FREEZING IN ACCORDANCE WITH NFPA 13.
6. CONTRACTOR RESPONSIBLE FOR PAYING FOR ALL FEES ASSOCIATED WITH OBTAINING PERMITS, INSPECTIONS, ETC.
7. ALL SPRINKLER HEAD TAKE OFF SHALL BE 1" MINIMUM. MOUNT SPRINKLER HEADS TO CENTER OF CEILING GRID.
8. THE SCOPE OF WORK SHALL INCLUDE BUT NOT LIMITED TO: NEW SPRINKLER SYSTEM INSIDE FACILITY TO COMPILY WITH NFPA-13.
9. THE REMOTE AREA USED FOR HYDRAULIC CALCULATIONS SHALL BE AS LISTED AUTOMATIC SPRINKLER SYSTEM DESIGN CRITERIA SCHEDULE. HYDRAULIC CALCULATIONS ARE TO BE PROVIDED BY SPRINKLER CONTRACTOR AND SHALL TO BE PROVIDED ON SEPARATE SHEET, AND SENT TO ENGINEER FOR REVIEW. THE SPRINKLER CONTRACTOR SHALL STAMP ALL SPRINKLER DRAWINGS. PROVIDE 10% SAFETY FACTOR FOR ALL CALCULATIONS. ALL SPRINKLER PIPING SHALL BE SIZED FOR 1 PSI PRESSURE DROP PER 100 FEET OF PIPE OR LESS TO MINIMIZE PRESSURE LOSSES.
10. SYSTEM SHALL BE HYDROSTATIC PRESSURE TESTED UPON COMPLETION OF INSTALLATION. ALL NEW JOINTS SHALL BE VISIBLE FOR INSPECITION DURING TESTING OF SYSTEM.
11. CONTRACTOR TO FURNISH OWNER WITH SIX (6) ADDITIONAL SPRINKLER HEADS AND STORAGE CABINET DELIVERED TO OWNER.
12. ALL FIRE PROTECTION EQUIPMENT SHALL BE INSTALLED PER MANUFACTURER RECOMMENDATIONS. ANY CONFLICTS WITH INSTALLATION AND MANUFACTURER RECOMMENDATIONS SHALL BE REPORTED TO ENGINEER.
13. ALL PIPING PENETRATING ALL FIRE RATED WALLS, CEILINGS, FLOORS, ROOFS, ETC. SHALL BE FIRE STOPPED. THE CONTRACTOR SHALL BE LICENSED IN THE LOCAL JURISDICTION. CONTRACTOR TO CONTACT CITY/TOWNSHIP TO VERIFY UPDATED LICENSED TO ENSURE THEY ARE UP TO DATE. CONTRACTOR SHALL COORDINATE WITH LOCAL JURISDICTION TO ENSURE COMPLIANCE WITH LOCAL BUILDING CODES.
14. THE CONTRACTOR SHALL PROVIDE OWNER WITH ALL NECESSARY OPERATION AND MAINTENANCE MANUALS, SHOP DRAWINGS, AND WARRANTY PAPERWORK UPON COMPLETION OF PROJECT, PLACED IN BINDER (THREE (3) COPIES REQUIRED AND DELIVERED TO OWNER, ARCHITECT, AND ENGINEER).
15. THE CONTRACTOR SHALL GUARANTEE ALL SYSTEMS AND WORKMANSHIP FOR A PERIOD OF ONE YEAR FROM DATE OF FINAL ACCEPTANCE.

PIPING MATERIAL

1. FIRE MAIN PIPING – SCHEDULE 40, BLACK IRON STEEL, MALLEABLE-IRON THREADED FITTINGS.

FIRE PROTECTION LEGEND

SYMBOLS	DESCRIPTION	SYMBOLS	DESCRIPTION
	STANDARD PENDENT SPRINKLER HEAD		SPRINKLER MAIN
	EXISTING OS&Y GATE VALVE		EXISTING DOUBLE CHECK BACKFLOW PREVENTER
	FLOW SWITCH		

FIRE PROTECTION CRITERIA

DEGREE OF SPRINKLER	PER NFPA 13 - 2022 EDITION
SPRINKLER COVER	PER NFPA 13 - 2022 EDITION
SPRINKLER SPACING	PER NFPA 13 - 2022 EDITION
COVERAGE DENSITY	LIGHT HAZARD: 0.1 GPM/SF
	ORDINARY HAZARD, GROUP 2: 0.2 GPM/SF
K-FACTOR OF SPRINKLER	5.0
QUANTITY OF SPRINKLER	SPRINKLER CONTRACTOR TO VERIFY
SPRINKLER MIN. PRESSURE	7
STATIC PRESSURE	SPRINKLER CONTRACTOR TO VERIFY
RESIDUAL PRESSURE	SPRINKLER CONTRACTOR TO VERIFY
TEST FLOW	SPRINKLER CONTRACTOR TO VERIFY
CEILING HEIGHT	OFFICE: 8'-10"
BUILDING HEIGHT	28'-0"
REMOTE FIRE ZONE	1500
OCCUPANCY CLASSIFICATION	OFFICE AREA - LIGHT HAZARD
	STORAGE AREA - ORDINARY HAZARD GROUP 2
	MEZZANINE - ORDINARY HAZARD GROUP I

LIGHT HAZARD

ORDINARY HAZARD GROUP 1

ORDINARY HAZARD GROUP 2

CLIENT

Rolesville
Genuine Community • Capital Connection
Est. 1837

ISSUES

ISSUE	ISSUANCE	DATE
0	BUILDING PERMIT & BID SET	07/01/2022

CONSULTANTS

WITHERS RAVENEL

WithersRavenel
Engineers | Planners | Surveyors

SEAL

NORTH CAROLINA PROFESSIONAL SEAL 054060 ENGINEER DANIEL IGO

Daniel M. Igo

PRIME CONSULTANT

IBI GROUP
421 Fayetteville Street, Suite 1609
Raleigh, NC 27601, USA
tel 919 851 4211
ibigroup.com

PROJECT

ROLESVILLE PUBLIC WORKS

805 E. YOUNG STREET
ROLESVILLE NC

PROJECT NO: 135941	
DRAWN BY: **WH**	CHECKED BY: **DI**
PROJECT MGR: **MH**	APPROVED BY: **DI**
SCALE: **As indicated**	DATE: **03/28/19**

SHEET TITLE

FIRE PROTECTION PLAN, NOTES, DETAILS, AND SCHEDULES

SHEET NUMBER **FP100** ISSUE **0**

BIM 360://135941-Rolesville_Public_Works R2020/135941-Rolesville-MECH_v20.rvt

SCALE CHECK: 10mm 1 in

2022-09-21 11:09:40 AM

GENERAL PLUMBING NOTES

1. THESE GENERAL PLUMBING NOTES SHALL APPLY TO ALL P SERIES DRAWINGS. ALL WORK ASSOCIATED WITH THE P SERIES DRAWINGS SHALL BE COORDINATED WITH ALL OTHER TRADES TO AVOID CONFLICTS.

2. THESE PLUMBING CONTRACT DRAWINGS FOR THE PLUMBING WORK ARE DIAGRAMMATIC, INTENDED TO CONVEY THE SCOPE OF WORK AND TO INDICATE THE GENERAL ARRANGEMENT AND APPROXIMATE LOCATION OF EQUIPMENT, PIPING, AND ACCESSORIES. THE INSTALLING CONTRACTOR SHALL BE RESPONSIBLE FOR CHECKING AND VERIFYING ALL CONDITIONS, DIMENSIONS, AND LOCATIONS PRIOR TO BIDDING PROJECT.

3. ALL PLUMBING WORK SHALL BE INSTALLED PER LOCAL PLUMBING CODE, HEALTH CODE, FIRE CODE, AND BUILDING CODE. ALL WORK SHALL COMPLY IN ACCORDANCE WITH LOCAL, STATE AND FEDERAL REGULATIONS AND OTHER AUTHORITIES HAVING JURISDICTION.

4. CONTRACTOR RESPONSIBLE FOR PAYING FOR ALL FEES ASSOCIATED WITH OBTAINING PERMITS, INSPECTIONS, ETC.

5. ALL PLUMBING EQUIPMENT SHALL BE INSTALLED PER MANUFACTURER RECOMMENDATIONS. ANY CONFLICTS WITH INSTALLATION AND MANUFACTURER RECOMMENDATIONS SHALL BE REPORTED TO ENGINEER.

6. ALL PIPING PENETRATING ALL WALLS, CEILINGS, FLOORS, ROOFS, ETC. SHALL BE FIRE STOPPED.

7. CONTRACTOR SHALL INSTALL ALL PIPING, EQUIPMENT, FIXTURE, ETC. IN A WORKMAN MANNER WITH QUALIFIED PLUMBERS.

8. CONTRACTOR SHALL BE LICENSED IN THE LOCAL JURISDICTION PRIOR TO BIDDING ON PROJECT. CONTRACTOR TO CONTACT CITY/TOWNSHIP TO VERIFY UPDATED LICENSED TO ENSURE THEY ARE UP TO DATE.

9. CONTRACTOR SHALL PROVIDE OWNER WITH ALL NECESSARY OPERATION AND MAINTENANCE MANUALS, SHOP DRAWINGS, WIRING DIAGRAMS, AND WARRANTY PAPERWORK UPON COMPLETION OF THE PROJECT.

10. CONTRACTOR SHALL GUARANTEE ALL SYSTEMS AND WORKMANSHIP FOR A PERIOD OF ONE YEAR FROM DATE OF FINAL ACCEPTANCE.

11. PLUMBING EQUIPMENT

    A. VERIFY ALL EQUIPMENT CONNECTIONS WITH EQUIPMENT MANUFACTURER'S CERTIFIED DRAWINGS. FIELD VERIFY ALL DIMENSIONS PRIOR TO FABRICATION OF WORK.

    B. INSTALL ALL EQUIPMENT LEVEL AND PLUMB AND INSTALL PER MANUFACTURER'S RECOMMENDATIONS.

    C. CONTRACTOR SHALL LOCATE ACCESS PANEL IN NON ACCESSIBLE CEILING AND WALLS FOR ALL VALVES, SHOCK ABSORBERS, CLEANOUTS AND ALL OTHER ITEMS THAT REQUIRE ACCESS TO PROPERLY MAINTAIN OR SERVICE THE EQUIPMENT.THE MINIMUM SLOPE OF ALL INTERIOR SEWER LINES SHALL BE 1/4 INCH PER FOOT. SEE SCHEDULE LOCATED ON DRAWING FOR CONNECTION SIZES FOR SANITARY, VENT, COLD, AND HOT WATER PIPING. ALL SANITARY PIPING SHALL BE SCHEDULE 40 PVC OR CAST IRON. ALL DOMESTIC WATER PIPING SHALL BE COPPER TYPE "L".

    D. PROVIDE SHUT OFF WATER VALVES FOR HOT AND COLD WATER PIPING AT ALL PLUMBING FIXTURES, HOT WATER HEATER, BOILER AND PLUMBING EQUIPMENT.

13. CONTRACTOR IS RESPONSIBLE FOR TESTING, AND ADJUSTING ALL PLUMBING EQUIPMENT INDICATED IN THE PLUMBING DRAWINGS.

14. ALL PIPING PENETRATIONS THROUGH EXPOSED WALLS SHALL BE PROVIDED WITH CHROME ESCUTCHEONS AND SEAL TO WALL OR CEILING.

15. NATURAL GAS PIPING

    A. ALL NATURAL GAS PIPING SHALL BE INSTALL PER NFPA FUEL GAS CODE AND JURISDICTION HAVING AUTHORITY. ALL INTERIOR GAS PIPING SHALL BE SCHEDULE 40 BLACK IRON (THREADED FITTINGS). CONTRACTOR SHALL PROVIDE SHUT OFF GAS VALVE FOR ALL EQUIPMENT UTILIZING NATURAL GAS.CONTRACTOR SHALL PROVIDE 6" DIRT LEG (MINIMUM) FOR ALL EQUIPMENT UTILIZING NATURAL GAS, WHERE REQUIRED.

    B. ALL NATURAL GAS PIPING SHALL BE TESTED FOR 24 HOUR PERIOD AT A MINIMUM OF 5 PSIG. ALL TESTING SHALL CONFORM TO IPC AND NFPA FUEL GAS CODE.

16. UPON COMPLETION OF PROJECT, THE CONTRACTOR SHALL FLUSH AND SANITIZE THE DOMESTIC HOT AND COLD WATER PIPING IN ACCORDANCE WITH LOCAL AND IPC, NFPA AND NATIONAL PLUMBING CODE.

PIPING/PLUMBING SYMBOLS

- EXISTING PIPING
- EXISTING PIPING TO BE DEMOLISHED UNLESS OTHERWISE NOTED TO BE ABANDONED IN PLACE
- SYS — NEW PIPING (SEE PIPING SYSTEM LINE CODES THIS DRAWING)
- FUTURE PIPING
- PIPE DOWN
- PIPE UP
- PIPE AT 45 DEG DROP
- PIPE BRANCH DOWN
- PIPE BRANCH UP
- UNION
- FLANGE WITH ORIFICE PLATE
- CONCENTRIC REDUCER
- ECCENTRIC REDUCER
- PIPE BREAK
- HEAT TRACE
- PIPE ANCHOR
- PIPE GUIDE
- EJ — EXPANSION JOINT
- FLOW ARROW
- PIPE HANGER
- FLEXIBLE CONNECTION
- END CAP (THREADED)
- END CAP (WELDED)
- FLANGED CONNECTION
- BLIND FLANGE
- BALL VALVE
- BALL VALVE - 3 WAY
- BALANCING VALVE
- BUTTERFLY VALVE
- CHECK VALVE - SWING
- CHECK VALVE - LIFT (NON-SLAM)
- CIRCUIT SETTER
- GATE VALVE
- GLOBE VALVE
- MULTIPURPOSE VALVE (TRIPLE DUTY) (SHUTOFF/CHECK/BALANCE)
- NEEDLE VALVE
- PLUG VALVE
- REFRIGERANT VALVE
- ANGLE VALVE
- PRESSURE RELIEF VALVE
- VALVE IN RISER
- PRESSURE REGULATING VALVE (SELF CONTAINED)
- PRESSURE REGULATING VALVE (SELF CONTAINED-PILOT OPERATED)
- BACKPRESSURE REGULATING VALVE (SELF CONTAINED)
- M — 2-WAY CONTROL VALVE
- M — 3-WAY CONTROL VALVE
- S — SOLENOID VALVE
- P-TRAP
- RUNNING TRAP
- RUNNING TRAP WITH CLEANOUT
- CO — HORIZONTAL CLEANOUT
- CO — CLEANOUT UP THROUGH FLOOR
- FD, RD, RD(O) — FLOOR DRAIN OR ROOF DRAIN OR ROOF DRAIN (OVERFLOW)
- HO — HUB OUTLET
- FUNNEL DRAIN / OPEN DRAIN
- HOSE BIBB / WALL HYDRANT
- HOSE ADAPTER
- BFP — BACKFLOW PREVENTER (REDUCED PRESSURE ZONE OR DOUBLE CHECK TYPE)
- EEW, ES, EEW&S — EMERGENCY EYE WASH OR EMERGENCY SHOWER OR EMERGENCY EYE WASH & SHOWER
- TP, CDW — TRAP PRIMER
- CDW/HDW — WATER HAMMER ARRESTOR
- PUMP (SEE SCHEDULE FOR TYPE)
- PUMP (SEE SCHEDULE FOR TYPE)
- PUMP SUCTION DIFFUSER
- DRAIN
- Y-STRAINER WITH BLOWDOWN
- BASKET STRAINER - SIMPLEX
- BASKET STRAINER - DUPLEX
- T — STEAM OR COMPRESSED AIR TRAP
- AUTO AIR VENT TO DRAIN
- MANUAL AIR VENT TO DRAIN
- TI — TEMPERATURE INDICATOR (WITH THERMOWELL)
- STEM THERMOMETER (WITH THERMOWELL)
- TT — TAP FOR TEMPERATURE TRANSMITTER (WITH THERMOWELL)
- PT — TAP FOR PRESSURE TRANSMITTER
- FT, LT — TAP FOR FLOW OR LEVEL TRANSMITTER (INSERTION TYPE ELEMENT WITH 2-1/2" FULL PORT BALL VALVE)
- TAP FOR TEST POINT (TEMPERATURE OR PRESSURE)
- PI — PRESURE INDICATOR
- CG — COMPOUND GAUGE (PRESSURE/VACUUM)
- FM — FLOW METER - INLINE (SEE SPEC FOR TYPE)

MISCELLANEOUS SYMBOLS

- EQUIPMENT IDENTIFIER: P / 1 — EQUIPMENT ABBREVIATION; EQUIPMENT NUMBER PER SCHEDULE
- EQUIPMENT IDENTIFIER: P-1 — EQUIPMENT ABBREVIATION; EQUIPMENT NUMBER PER SCHEDULE
- SECTION MARKER AND ARROW: 1A / M-1 — SECTION NUMBER; SHEET NUMBER WHERE SECTION IS FOUND OR CUT FROM
- DETAIL MARKER: 1A / M-1 — DETAIL NUMBER; SHEET NUMBER WHERE DETAIL IS FOUND OR REFERENCED FROM
- ENLARGED PLAN MARKER: 1A / M-1 — ENLARGED PLAN NUMBER; SHEET NUMBER WHERE ENLARGED PLAN IS FOUND OR REFERENCED FROM
- POINT OF NEW CONNECTION TO EXISTING CONSTRUCTION
- MATCH LINE
- PNEUMATIC SIGNAL
- ELECTRIC SIGNAL/ CONTROL SIGNAL

NOT ALL SYMBOLS ARE APPLICABLE IN THIS PROJECT

CLIENT

Rolesville
Genuine Community • Capital Connection
Est. 1837

ISSUES

ISSUE	ISSUANCE	DATE
0	BUILDING PERMIT & BID SET	07/01/2022

CONSULTANTS

WITHERS RAVENEL

WithersRavenel
Engineers | Planners | Surveyors

SEAL

NORTH CAROLINA PROFESSIONAL SEAL 054060 ENGINEER DANIEL IGO

Daniel M. Igo

Digitally signed by Daniel M. Igo
DN: C=US, E=dmigo@ibigroup.com, O=IBI Group, OU=Daniel M. Igo
Reason: I am approving this document
Date: 2022.09.21 16:09:53-04'00'

PRIME CONSULTANT

IBI

IBI GROUP
421 Fayetteville Street, Suite 1609
Raleigh, NC 27601, USA
tel 919 851 4211
ibigroup.com

PROJECT

ROLESVILLE PUBLIC WORKS

805 E. YOUNG STREET
ROLESVILLE NC

PROJECT NO: 135941	
DRAWN BY: **P. PATIL**	CHECKED BY: **D. IGO**
PROJECT MGR: **M. HUMIENNY**	APPROVED BY: **D. IGO**
SCALE: **12" = 1'-0"**	DATE: **03/28/19**

SHEET TITLE

PLUMBING GENERAL NOTES AND SYMBOLS

SHEET NUMBER **P000** | ISSUE **0**

BIM 360://135941-Rolesville_Public_Works R2020/135941-Rolesville-MECH_v20.rvt

SCALE CHECK: 10mm 1 in

2022-09-20 2:36:09 PM

ABBREVIATIONS

AAV	AUTOMATIC AIR VENT
ABC	ABOVE BOTTOM CHORD
ABDN	ABANDONED
ABV	ABOVE
AC	AIR COMPRESSOR
AC	ACCESS COVER
AC	AFTER COOLER
ACC	AIR COOLED CONDENSER
ACC	ACCUMULATOR
ACCH	AIR COOLED CHILLER
ACFM	ACTUAL CUBIC FEET PER MINUTE
ACST	ACOUSTICAL
ACU	AIR CONDITIONING UNIT
AD	AIR DRYER
ADD	ADDENDUM
ADJ	ADJACENT
ADJT	ADJUSTABLE
ADMIN	ADMINISTRATIVE
AF	AIR FILTER
AFF	ABOVE FINISHED FLOOR
AFG	ABOVE FINISHED GRADE
AHU	AIR HANDLING UNIT
AL	ALUMINUM
ALT	ALTERNATE
ALTV	ALTITUDE VALVE
AMB	AMBIENT
AMPS	AMPERES
ANC	ANCHOR
APNL	ACCESS PANEL
APPROX	APPROXIMATE
ARCH	ARCHITECTURAL
ARRGT	ARRANGEMENT
AS	AIR SEPARATOR
ASR	AUTOMATIC SPRINKLER RISER
ASSOC	ASSOCIATION / ASSOCIATES
ATTEN	ATTENUATOR
AVG	AVERAGE
BA	BALL VALVE
BBC	BELOW BOTTOM CHORD
BBD	BOTTOM BLOWDOWN
BC	BOTTOM CHORD OF TRUSS
BCS	BLACK CARBON STEEL
BDD	BACK DRAFT DAMPER
BETW	BETWEEN
BF	BLIND FLANGE
BF	BUTTERFLY VALVE
BFDW	BOILER FEEDWATER
BFF	BELOW FINISHED FLOOR
BFP	BACKFLOW PREVENTER
BG	BLAST GATE
BHP	BRAKE HORSEPOWER
BLDG	BUILDING
BLWDN	BLOW DOWN
BM	BEAM
BOD	BOTTOM OF DUCT
BOP	BOTTOM OF PIPE
BOS	BOTTOM OF STEEL
BOT	BOTTOM
BPV	BACK PRESSURE VALVE
BR	BRINE
BRCG	BRACING
BRKT	BRACKET
BS	BLOW-OFF SILENCER
BSMT	BASEMENT
BTU	BRITISH THERMAL UNIT
BTUH	BRITISH THERMAL UNIT PER HOUR
BULL	BULLETIN
BV	BLOW OFF VALVE
BW	BUTT WELD
BY ARCH	BY ARCHITECTURAL TRADES
C	CENTIGRADE
C/C	CENTER TO CENTER
CA	COMPRESSED AIR
CAD	COMPRESSED AIR DRYER
CAI	COMPRESSED AIR INTAKE
CAIH	COMPRESSED AIR INTAKE HOOD
CAU	CAUSTIC
CAV	CONSTANT AIR VOLUME
CB	CATCH BASIN
CCW	COUNTER CLOCKWISE
CF	CUBIC FEET
CFH	CUBIC FEET PER HOUR
CFM	CUBIC FEET PER MINUTE
CFM	CUBIC FEET PER MINUTE
CFS	CUBIC FEET PER SECOND
CHEM	CHEMICAL
CHKD PL	CHECKERED PLATE
CHPP	CHILLED WATER PRIMARY PUMP
CHSP	CHILLED WATER SECONDARY PUMP
CHWR	CHILLED WATER RETURN
CHWS	CHILLED WATER SUPPLY
CI	CAST IRON
CISP	CAST IRON SOIL PIPE
CIWP	CAST IRON WATER PIPE
CJ	CONSTRUCTION JOINT
CK	CHECK VALVE
CL	CENTERLINE
CLG	CEILING
CLR	CLEAR
CM	CENTIMETER
CO	CARBON MONOXIDE
CO	CLEAN OUT
CO2	CARBON DIOXIDE
COL	COLUMN
COMP	COMPRESSOR
CONC	CONCRETE
COND	CONDENSER (CONDENSATION)
CONN	CONNECTION
CONSTR	CONSTRUCTION
CONT	CONTINUATION (CONTINUOUS)
CONTR	CONTRACT(OR)
CP	CONTROL PANEL
CP	CENTIPOISE
CPLG	COUPLING
CPVC	CHLORINATED POLYVINYL CHLORIDE

ABBREVIATIONS

CS	CARBON STEEL
CT	COOLING TOWER
CTR	CENTER
CTWR	COOLING TOWER WATER RETURN
CTWS	COOLING TOWER WATER SUPPLY
CU	COPPER
CUH	CABINET UNIT HEATER
CV	CONTROL VALVE
Cv	FLOW COEFFICIENT
CW	CITY WATER
CW	CLOCKWISE
CWR	COOLING WATER RETURN
CWS	COOLING WATER SUPPLY
CY	CUBIC YARD
CYL	CYLINDER
D&T	DRIP AND TRAP
DAP	ACID DRAIN PUMP
DB	DRY BULB TEMPERATURE
dB	DECIBEL
DCW	DOMESTIC COLD WATER
DEG	DEGREE
DEG C	DEGREE CENTIGRADE
DEG F	DEGREE FAHRENHEIT
DEPT	DEPARTMENT
DES	DESIGN
DET	DETAIL
DEX	DIESEL ENGINE EXHAUST
DF	DRINKING FOUNTAIN
DG	DOOR GRILLE
DHW	DOMESTIC HOT WATER
DHWR	DOMESTIC HOT WATER RETURN
DI	DUCTILE IRON
DIA	DIAMETER
DIAPH	DIAPHRAGM
DIFF	DIFFUSER
DIM	DIMENSION
DISCH	DISCHARGE
DIST	DISTILLED WATER
DM	DIAPHRAGM VALVE
DN	DOWN
DP	DIFFERENTIAL PRESSURE
DPR	DAMPER
DPS	DIFFERENTIAL PRESSURE SWITCH
DR	DRAIN
DS	DISCHARGE SILENCER
DS	DOWN SPOUT
DSP	DUPLEX SUMP PUMP
DV	DIAPHRAGM VALVE
DWG	DRAWING
DWH	DOMESTIC WATER HEATER
EA	EACH
EAT	ENTERING AIR TEMPERATURE
EBH	ELECTRIC BASEBOARD HEATER
ED	EQUIPMENT DRAIN
EF	EXHAUST FAN
EFF	EFFICIENCY
EFL	EFFLUENT
EG	EXHAUST GRILLE
EHC	ELECTRIC HEATING COIL
EJ	EXPANSION JOINT
EL	ELEVATION
ELEC	ELECTRIC(AL)
ELL	ELBOW
EMER	EMERGENCY SHOWER AND EYEWASH
EMS	EMERGENCY SHOWER
EMW	EMERGENCY EYE WASH
ENCL	ENCLOSURE
ENT	ENTERING
EQ	EQUAL
EQPT	EQUIPMENT
ER	EXHAUST REGISTER
ESP	EXTERNAL STATIC PRESSURE
EST	ESTIMATED
EWC	ELECTRIC WATER COOLER
EWH	ELECTRIC WATER HEATER
EWT	ENTERING WATER TEMPERATURE
EXH	EXHAUST
EXP	EXPANSION
EXST	EXISTING
EXT	EXTERIOR
F	FAHRENHEIT
F/F	FACE TO FACE
FA	FIRE ALARM
FAI	FRESH AIR INTAKE
FAT	FINAL AIR TEMPERATURE
FC	FAIL CLOSED
FCU	FAN COIL UNIT
FD	FLOOR DRAIN
FDN	FOUNDATION
FE	FIRE EXTINGUISHER
FEC	FIRE EXTINGUISHER CABINET
FF	FINAL FILTER
FHC	FIRE HOSE CABINET
FHR	FIRE HOSE RACK/REEL
FIN	FINISH
FIXT	FIXTURE
FL	FLOOR
FLEX	FLEXIBLE CONNECTOR
FLEX CONN	FLEXIBLE CONNECT0R
FLG	FLANGE
FO	FAIL OPEN
FP	FAN POWERED
FP	FILTER PRESS
FP	FIRE PROTECTION
FPM	FEET PER MINUTE
FPRF	FIREPROOF
FPT	FEMALE PIPE THREAD
FRP	FIBERGLASS REINFORCED PLASTIC
FS	FLOW SWITCH
FT	FEET
FTG	FITTING
FTG	FOOTING
FTHD	FEET OF HEAD

ABBREVIATIONS

FTR	FIN TUBE RADIATION
FUT	FUTURE
FV	FOOT VALVE
GA	GAGE
GA	GATE VALVE
GA	GAUGE
GAL	GALLON
GALV	GALVANIZED
GC	GENERAL CONTRACT(OR)
GCS	GALVANIZED CARBON STEEL
GD	GLOBE DIAPHRAGM
GENL	GENERAL
GL	GLOBE VALVE
GPH	GALLONS PER HOUR
GPM	GALLONS PER MINUTE
GR	GRADE
GRL	GRILLE
H	HEIGHT
HB	HOSE BIBB
HC	HEATING COIL
HCP	HANDICAPPED
HD	HEAD
HDGAF	HOT DIPPER GALVANIZED AFTER FABRICATION
HEPA	HIGH EFFICIENCY PARTICULATE AIR FILTER
Hg	MERCURY
HGR	HANGER
HGT	HEIGHT
HH	HOSE HYDRANT
HHWR	HEATING HOT WATER RETURN
HHWS	HEATING HOT WATER SUPPLY
HO	HUB OUTLET
HORIZ	HORIZONTAL
HP	HIGH POINT
HP	HIGH PRESSURE
HP	HORSEPOWER
HR	HOSE REEL
HTCP	HEAT TRACE CONTROL PANEL
HV	HEATING AND VENTILATING
HVAC	HEATING, VENTILATING AND AIR CONDITIONING
HVU	HEATING AND VENTILATING UNIT
HWH	HOT WATER HEATER
HYD	HYDRANT
Hz	HERTZ
I&C	INSTRUMENTATION AND CONTROLS
IA	INSTRUMENT AIR
ICFM	INITIAL CUBIC FEET PER MINUTE
ID	INSIDE DIAMETER
IE	INVERT ELEVATION
IH	INTAKE HOOD
IN	INCH(ES)
IN WC	INCHES WATER COLUMN
IN WG	INCHES WATER GAUGE
INC	INCORPORATED
INSUL	INSULATION
INTR	INTERIOR
INV	INVERT
ITC	INSPECTOR TEST CONNECTION
IW	INDUSTRIAL WASTE
JC	JANITOR CLOSET
K	KIPS
KG	KNIFE GATE
kPa	KILOPASCALS
KS	KITCHEN SINK
KSF	KIPS PER SQUARE FOOT
KSI	KIPS PER SQUARE INCH
KW	KILOWATT
KWH	KILOWATT-HOUR
L	LENGTH
LAB	LABORATORY
LAV	LAVATORY
LB	POUND
LBS	POUNDS
LDB	LEAVING DRY BULB
LG	LENGTH
LH	LEFT HAND
LIN	LINEAR
LO	LOCKOUT
LP	LOW POINT
LP	LOW PRESSURE
LPM	LITERS PER MINUTE
LVA	LEAVING AIR
LVG	LEAVING
LVR	LOUVER
LWB	LEAVING WET BULB
LWT	LEAVING WATER TEMPERATURE
M	METER
MACH	MACHINE
MATL	MATERIAL
MAU	MAKE-UP AIR UNIT
MAV	MANUAL AIR VENT
MAX	MAXIMUM
MBH	THOUSAND BTU PER HOUR
MC	MIST COLLECTOR
MCC	MOTOR CONTROL CENTER
MD	MOTORIZED DAMPER
MDPR	MANUAL DAMPER
MECH	MECHANICAL
MEZZ	MEZZANINE
MFG	MANUFACTURING
MFR	MANUFACTURER
MH	MANHOLE
MIN	MINIMUM
MISC	MISCELLANEOUS
MK	MARK
MM	MILLIMETER
MO	MOTOR OPERATED
MOLWT	MOLECULAR WEIGHT
MPT	MALE PIPE THREAD

ABBREVIATIONS

MTD	MOUNTED
MUA	MAKE UP AIR
MV	MIXING VALVE
MW	MILL WATER
N2	NITROGEN
NC	NOISE CRITERIA
NC	NORMALLY CLOSED
ND	NECK DIAMETER
ND	NEEDLE VALVE
NEC	NATIONAL ELECTRIC CODE
NG	NATURAL GAS
NGM	NATURAL GAS METER
NIC	NOT IN CONTRACT
NK	NECK
NO	NORMALLY OPEN
NO	NUMBER
NOM	NOMINAL
NORM	NORMAL
NPSH	NET POSITIVE SUCTION HEAD
NPT	NATIONAL PIPE THREAD
NTS	NOT TO SCALE
OA	OUTSIDE AIR
OAD	OUTSIDE AIR DAMPER
OAI	OUTSIDE AIR INTAKE
OBD	OPPOSING BLADE DAMPER
OD	OUTSIDE DIAMETER
OPER	OPERATOR
OPNG	OPENING
OPP	OPPOSITE
ORD	OVERFLOW ROOF DRAIN
OS&Y	OUTSIDE STEM AND YOKE
OXY	OOO
OXY	OXYGEN
OZ	OUNCE
P	PUMP
P&ID	PIPING & INSTRUMENTATION DIAGRAM
PA	PIPE ANCHOR
PD	PRESSURE DIFFERENTIAL
PD	PRESSURE DROP
PDP	PRESSURE DEW POINT
PDR	PROCESS DRAIN
PDS	PRESSURE DIFFERENTIAL SWITCH
PE	POLYETHYLENE
PEN	PENETRATION
PERF	PERFORATED
PG	PIPE GUIDE
PG	PRESSURE GAUGE
PH	PHASE
PI	PRESSURE INDICATOR
PIV	POST INDICATOR VALVE
PL	PLATE
PL	PLUG VALVE
PNL	PANEL
POC	POINT OF CONNECTION
POU	POINT OF USE
PP	POWER PANEL
PREFAB	PREFABRICATED
PRESS	PRESSURE
PRI	PRIMARY
PROJ	PROJECT
PRV	PRESSURE REDUCING VALVE
PRV	PRESSURE RELIEF SAFETY VALVE
PS	PIPE SUPPORT
PS	PRESSURE SWITCH
PSF	POUNDS PER SQUARE FOOT
PSI	POUNDS PER SQUARE INCH
PSIA	POUNDS PER SQUARE INCH, ABSOLUTE
PSID	POUNDS PER SQUARE INCH, DIFFERENTIAL
PSIG	POUNDS PER SQUARE INCH, GAUGE
PT	POINT
PT	PRESSURE TRANSMITTER
PTFE	POLYTETRAFLUROETHYLENE
PVC	POLYVINYL CHLORIDE
PVDF	POLYVINYLIDENE FLUORIDE PLASTIC
PWR	POWER
QD	QUICK DISCONNECT
QDD	QUICK DISCONNECT, DRY
R or RAD	RADIUS
R or RSR	RISER
RA	RETURN AIR
RAG	RETURN AIR GRILLE
RAR	RETURN AIR REGISTER
RC	ROOF CONDUCTOR
RCP	REINFORCED CONCRETE PIPE
RD	ROOF DRAIN
RECIRC	RECIRCULATED
RED	REDUCER / REDUCTION
REF	REFERENCE/REFIGERATOR
REG	REGISTER
REQD	REQUIRED
RF	RAISED FACE
RF	RETURN FAN
RFGT	REFRIGERANT
RFGV	REFRIGERANT VENT
RH	RELATIVE HUMIDITY
RH	RIGHT HAND
RHH	ROOF HOSE HOUSE
RM	ROOM
RPBP	REDUCED PRESSURE BACKFLOW PREVENTER
RPM	REVOLUTIONS PER MINUTE
RS	ROOF SUMP
RTN	RETURN
RTU	ROOF TOP UNIT
RV	ROOF VENT
RV	RELIEF VALVE
S	SLOPE
SA	SUPPLY AIR
SA	SURGE ARRESTOR
SAG	SUPPLY AIR GRILLE
SAN	SANITARY

ABBREVIATIONS

SAR	SUPPLY AIR REGISTER
SAT	SATURATION
SCFM	STANDARD CUBIC FEET PER MINUTE
SCH	SCHEDULE
SCR	SCREW
SCV	SECTIONAL CONTROL VALVE
SD	SMOKE DETECTOR
SD	SUPPLY DIFFUSER
SEC	SECOND
SECT	SECTION
SEP	SEPARATE
SF	SUPPLY FAN
SHR	SHOWER
SHT	SHEET
SIM	SIMILAR
SLV	SLEEVE
SP	SPECIFIC
SP	STATIC PRESSURE
SPECS	SPECIFICATIONS
SQ	SQUARE
SQ FT	SQUARE FOOT
SQ YD	SQUARE YARD
SS	SERVICE SINK
SS	STRUCTURAL STEEL
SSF	SIDESTREAM FILTER
SSH	SAFETY SHOWER & EYE WASH
SST	STAINLESS STEEL
SSU	SECOND SAYBOLT UNIVERSAL
ST	STEAM TRAP
ST	STORM DRAINAGE
ST(O)	STORM DRAINAGE (OVERFLOW)
STA	STATION
STD	STANDARD
STIFF	STIFFENER
STL	STEEL
STM	STEAM
STOR	STORAGE
STR	STRAINER
STRU	STRUCTURAL
SUBST	SUBSTATION
SURF	SURFACE
SV	SMOKE VENT
SYS	SYSTEM
T	TANK
TBD	TO BE DETERMINED
TC	TOP CHORD
TDH	TOTAL DYNAMIC HEAD
TEMP	TEMPERATURE
THD	THREAD
THK	THICK
TI	TEMPERATURE INDICATOR
TOD	TOP OF DUCT
TOF	TOP OF FOOTING
TOS	TOP OF STEEL
TRV	THERMO/TEMP RELIEF VALVE
TSP	TOTAL STATIC PRESSURE
TYP	TYPICAL
UG	UNDERGROUND
UH	UNIT HEATER
UON	UNLESS OTHERWISE NOTED
UR	URINAL
V	VENT
V	VOLT(AGE)
VA	VALVE
VAC	VACUUM
VAC	VOLTS ALTERNATING CURRENT
VAV	VARIABLE AIR VOLUME
VCD	VOLUME CONTROL DAMPER (MANUAL)
VCP	VITRIFIED CLAY PIPE
VD	VOLUME DAMPER
VEL	VELOCITY
VENT	VENTILATOR
VERT	VERTICAL
VEST	VESTIBULE
VFD	VARIABLE FREQUENCY DRIVE
VISC	VISCOSITY
VOL	VOLUME
VTR	VENT THRU ROOF
W	WASTE
W	WIDTH (WIDE)
W/	WITH
W/O	WITHOUT
WB	WET BULB
WC	WATER CLOSET
WCO	WALL CLEAN OUT
WF	WASH FOUNTAIN
WFS	WATER FLOW SWITCH
WG	WATER GAUGE
WH	WALL HYDRANT
WH	WATER HEATER
WHA	WATER HAMMER ARRESTOR
WL	WATER LEVEL
WM	WATER METER
WOG	WATER OIL OR GAS
WOM	WOMEN'S
WSP	WORKING STEAM PRESSURE
WT	WEIGHT
WW	WELL WATER
XP	EXPLOSION PROOF
YD	YARD

CLIENT

Rolesville
Genuine Community • Capital Connection
Est. 1837

ISSUES

ISSUE	ISSUANCE	DATE
A	OWNER REVIEW SET	05/05/2022
0	BUILDING PERMIT & BID SET	07/01/2022

CONSULTANTS

WITHERS RAVENEL

WithersRavenel
Engineers | Planners | Surveyors

SEAL

NORTH CAROLINA PROFESSIONAL SEAL 054060 ENGINEER DANIEL IGO

Daniel M. Igo

Digitally signed by Daniel M. Igo
DN: cn=Daniel M. Igo, o=IBI Group, ou=IBI Group, c=US, email=daniel.igo@ibigroup.com
Reason: I am approving this document
Date: 2022.09.20 14:20:20-04'00'

PRIME CONSULTANT

IBI

IBI GROUP
421 Fayetteville Street, Suite 1609
Raleigh, NC 27601, USA
tel 919 851 4211
ibigroup.com

PROJECT

ROLESVILLE PUBLIC WORKS

805 E. YOUNG STREET
ROLESVILLE NC

PROJECT NO: 135941	
DRAWN BY: **P. PATIL**	CHECKED BY: **D. IGO**
PROJECT MGR: **M. HUMIENNY**	APPROVED BY: **D. IGO**
SCALE:	DATE: **05/10/22**

SHEET TITLE

PIPING ABBREVIATIONS

SHEET NUMBER **P001**

ISSUE **0**

2022-09-20 2:36:15 PM

BIM 360://135941-Rolesville_Public_Works R2020/135941-Rolesville-MECH_v20.rvt

SCALE CHECK 10mm 1 in

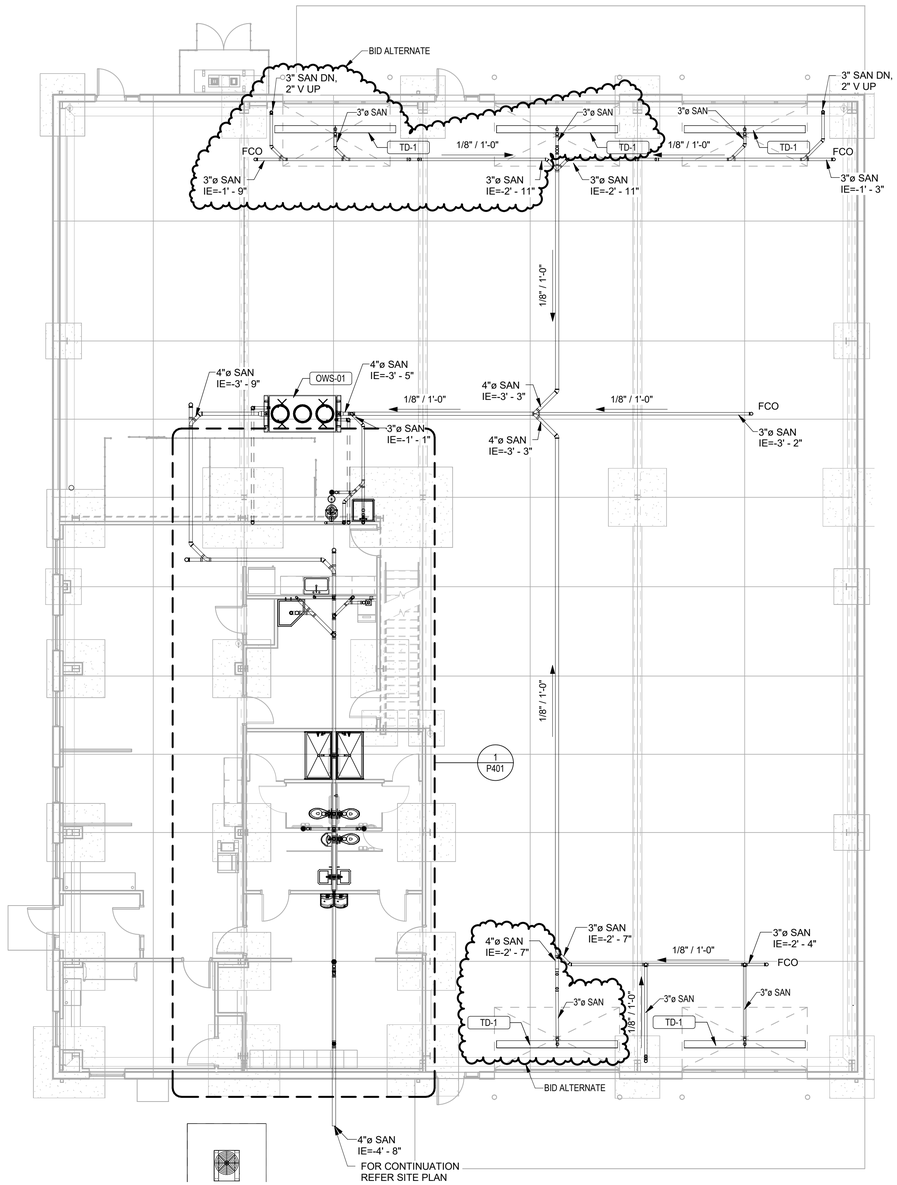

1 P100 UNDERGROUND - PLUMBING PLAN

Scale: 1/8" = 1'-0"

2022-09-20 2:36:30 PM

CLIENT

Rolesville
Genuine Community • Capital Connection
Est. 1837

ISSUES

ISSUE	ISSUANCE	DATE
A	OWNER REVIEW SET	05/05/2022
0	BUILDING PERMIT & BID SET	07/01/2022

KEYPLAN

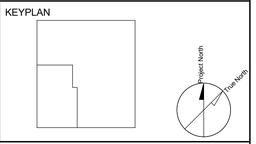

CONSULTANTS

WITHERS RAVENEL

WithersRavenel
Engineers | Planners | Surveyors

SEAL

NORTH CAROLINA PROFESSIONAL SEAL 054060 ENGINEER DANIEL IGO

Daniel M. Igo

Digitally signed by Daniel M. Igo
DN: cn=Daniel M. Igo, o=IBI Group, ou=IBI Group, cn=Daniel M. Igo, email=dan.igo@ibigroup.com
Reason: I am approving this document
Date: 2022-09-21 16:20:12-04'00'

PRIME CONSULTANT

IBI

IBI GROUP
421 Fayetteville Street, Suite 1609
Raleigh, NC 27601, USA
tel 919 851 4211
ibigroup.com

PROJECT

ROLESVILLE PUBLIC WORKS

805 E. YOUNG STREET
ROLESVILLE NC

PROJECT NO:
135941

DRAWN BY:	CHECKED BY:
P. PATIL	**D. IGO**
PROJECT MGR:	APPROVED BY:
M. HUMIENNY	**D. IGO**
SCALE:	DATE:
1/8" = 1'-0"	**03/03/22**

SHEET TITLE

UNDERGROUND PLUMBING PLAN

SHEET NUMBER	ISSUE
P100	0

BIM 360://135941-Rolesville_Public_Works R2020/135941-Rolesville-MECH_v20.rvt

SCALE CHECK 1 in 20mm

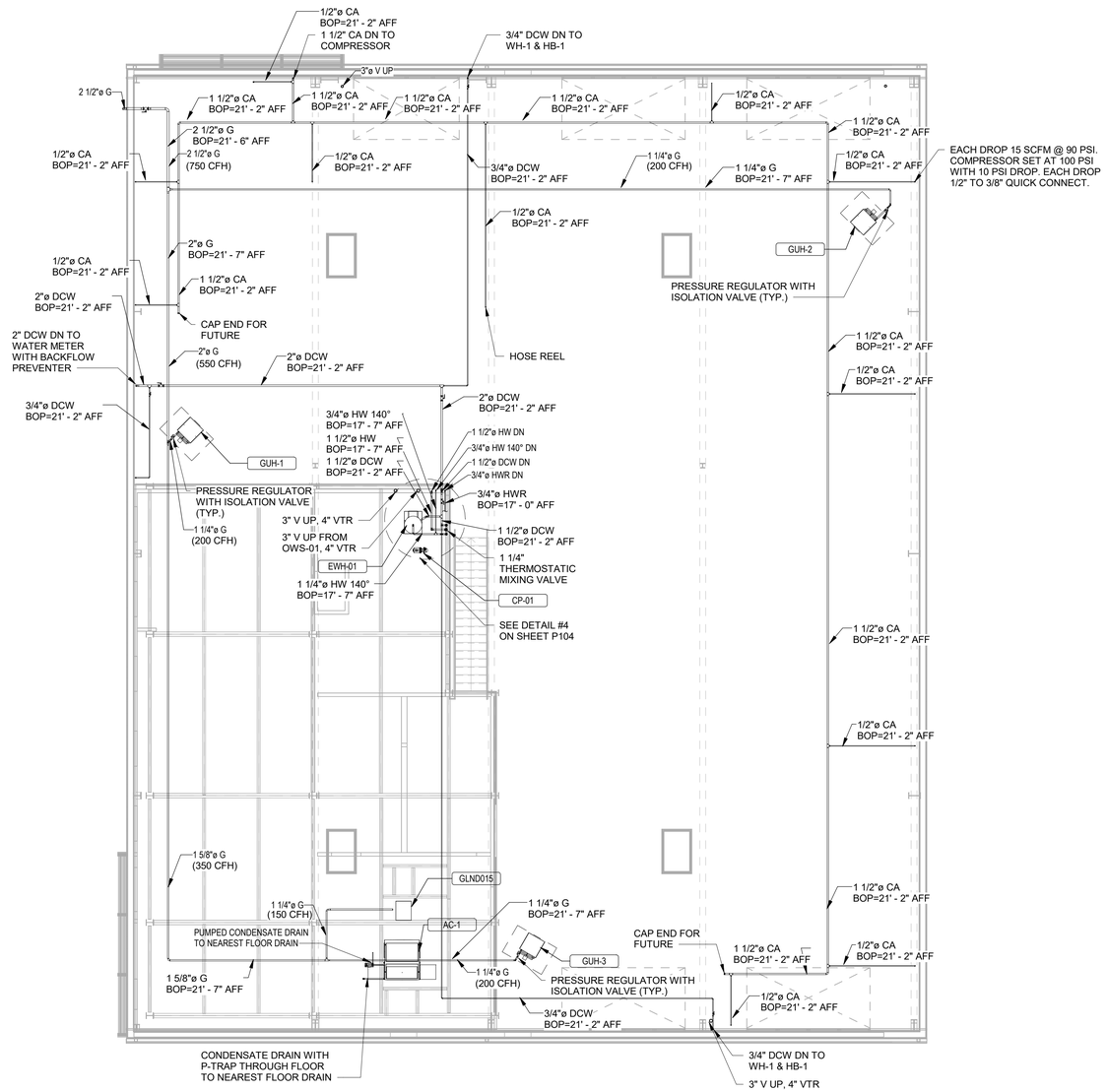

2 P101 MEZZANINE FLOOR - PLUMBING PLAN

Scale: 1/8" = 1'-0"

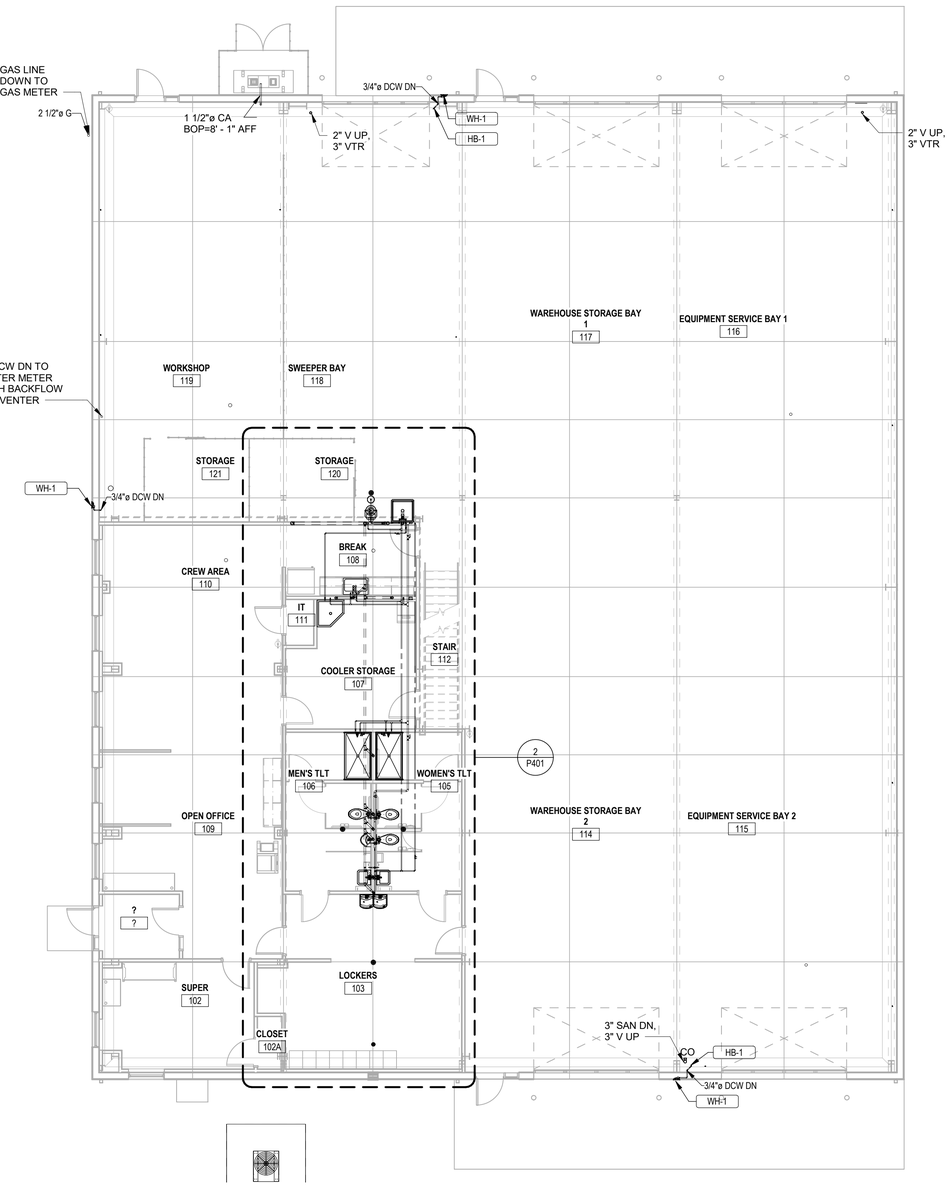

1 P101 FIRST FLOOR - PLUMBING PLAN

Scale: 1/8" = 1'-0"

CLIENT

Rolesville
Genuine Community • Capital Connection
Est. 1837

ISSUES

ISSUE	ISSUANCE	DATE
A	OWNER REVIEW SET	05/05/2022
0	BUILDING PERMIT & BID SET	07/01/2022

KEYPLAN

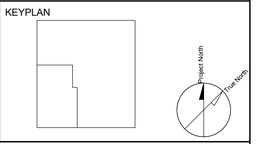

CONSULTANTS

WITHERS RAVENEL

WithersRavenel
Engineers | Planners | Surveyors

SEAL

NORTH CAROLINA PROFESSIONAL SEAL 054060 ENGINEER DANIEL IGO

Daniel M. Igo

Digitally signed by Daniel M. Igo
DN: C=US, E=dan.igo@ibigroup.com, O=IBI Group, CN=Daniel M. Igo
Reason: I am approving this document
Date: 2022.09.21 18:19:08-04'00'

PRIME CONSULTANT

IBI

IBI GROUP
421 Fayetteville Street, Suite 1609
Raleigh, NC 27601, USA
tel 919 851 4211
ibigroup.com

PROJECT

ROLESVILLE PUBLIC WORKS

805 E. YOUNG STREET
ROLESVILLE NC

PROJECT NO: 135941	
DRAWN BY: **P. PATIL**	CHECKED BY: **D. IGO**
PROJECT MGR: **M. HUMIENNY**	APPROVED BY: **D. IGO**
SCALE: **1/8" = 1'-0"**	DATE: **03/03/22**

SHEET TITLE

FIRST AND MEZZANINE FLOOR PLUMBING PLANS

SHEET NUMBER **P101**

ISSUE **0**

BIM 360://135941-Rolesville_Public_Works R2020/135941-Rolesville-MECH_v20.rvt

SCALE CHECK 1 in 50mm

2022-09-20 2:36:43 PM

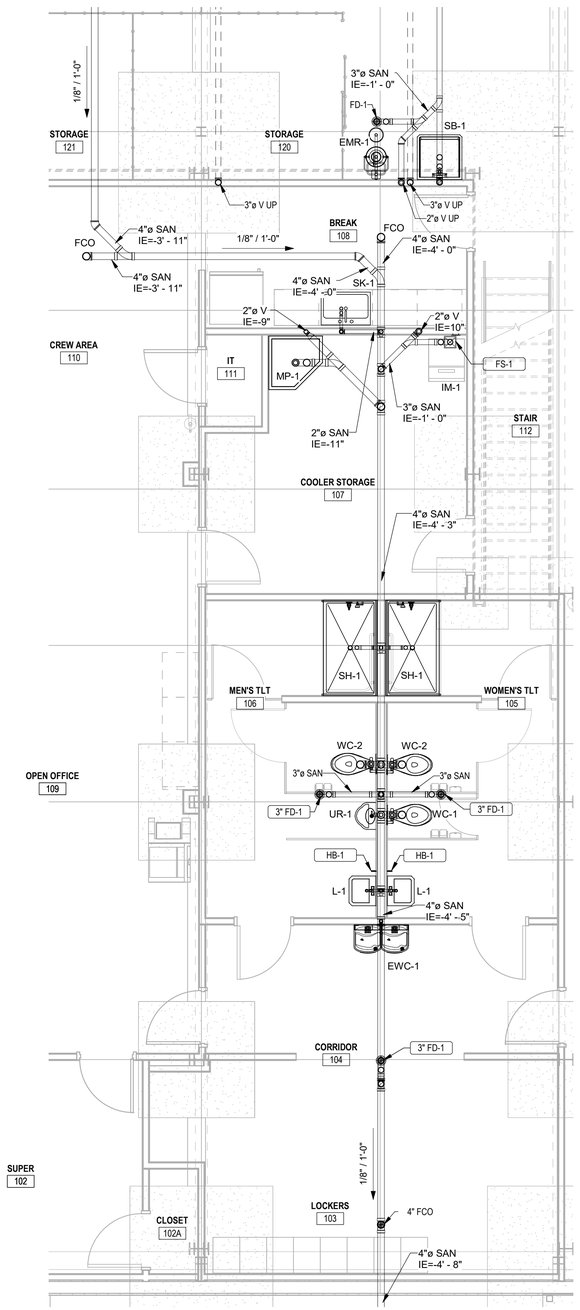

1 P401 ENLARGED UNDERGROUND - PLUMBING PLAN

Scale: 1/4" = 1'-0"

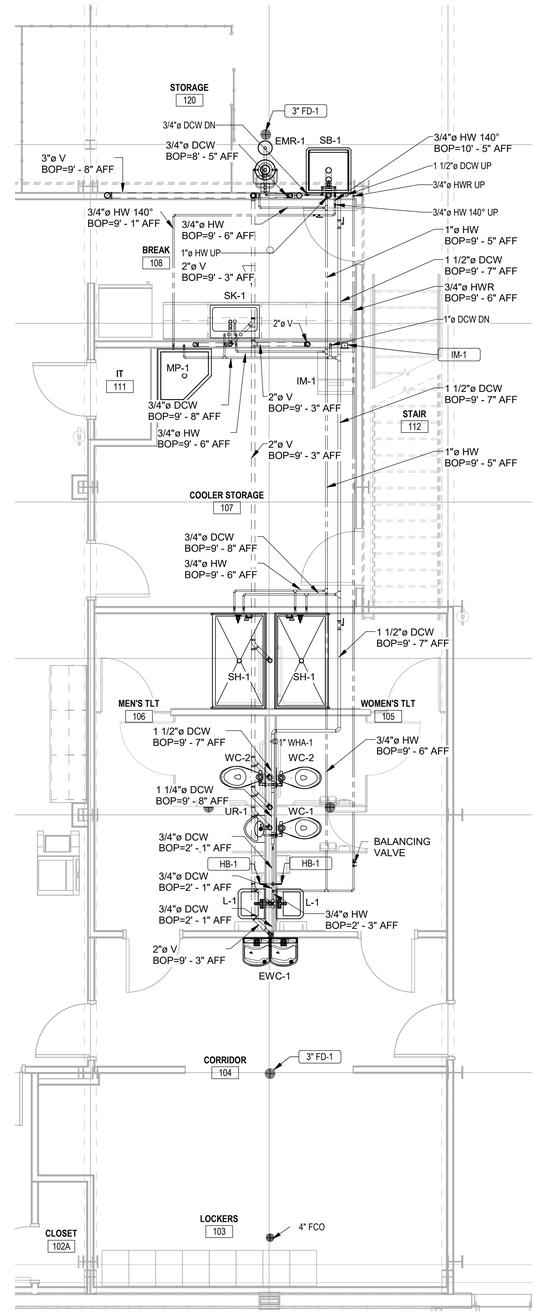

2 P401 ENLARGED FIRST FLOOR - PLUMBING PLAN

Scale: 1/4" = 1'-0"

CLIENT

Rolesville
Genuine Community • Capital Connection
Est. 1837

ISSUES

ISSUE	ISSUANCE	DATE
A	OWNER REVIEW SET	05/05/2022
0	BUILDING PERMIT & BID SET	07/01/2022

KEYPLAN

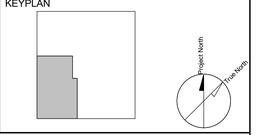

CONSULTANTS

WITHERS RAVENEL

WithersRavenel
Engineers | Planners | Surveyors

SEAL

NORTH CAROLINA PROFESSIONAL SEAL 054060 ENGINEER DANIEL IGO

Daniel M. Igo

Digitally signed by Daniel M. Igo
DN: C=US, email=dan.igo@ibigroup.com, O=IBI Group, CN=Daniel M. Igo
Reason: I am approving this document
Date: 2022-09-22 15:45:24-04'00'

PRIME CONSULTANT

IBI

IBI GROUP
421 Fayetteville Street, Suite 1609
Raleigh, NC 27601, USA
tel 919 851 4211
ibigroup.com

PROJECT

ROLESVILLE PUBLIC WORKS

805 E. YOUNG STREET
ROLESVILLE NC

PROJECT NO:
135941

DRAWN BY: **P. PATIL**	CHECKED BY: **D. IGO**
PROJECT MGR: **M. HUMIENNY**	APPROVED BY: **D. IGO**
SCALE: **1/4" = 1'-0"**	DATE: **03/04/22**

SHEET TITLE

ENLARGED PLUMBING PIPING PLANS

SHEET NUMBER **P401**

ISSUE **0**

BIM 360://135941-Rolesville_Public_Works R2020/135941-Rolesville-MECH_v20.rvt

SCALE CHECK 1 in 10mm

2022-09-22 2:36:23 PM

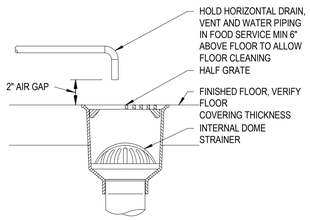

11 FLOOR SINK
Scale: NTS

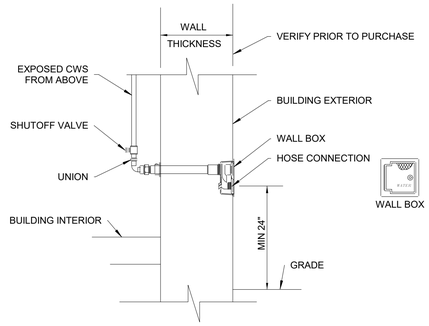

10 WALL HYDRANT DETAIL
Scale: NTS

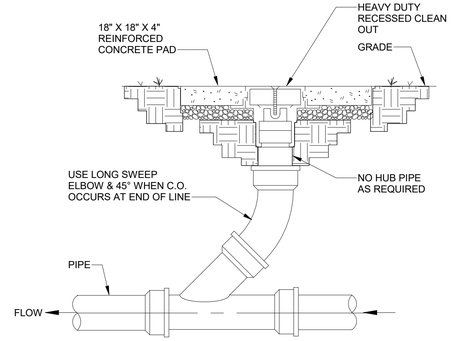

9 EXTERIOR CLEAN-OUT (ECO) DETAIL
Scale: NTS

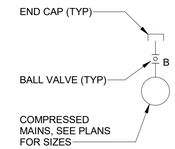

BRANCH TAKE-OFF

COMPRESSED AIR BRANCH TAKE-OFF CHART		
SERVICES	SIZE B	TAP
CA	1/2"	TOP

6 COMPRESSED AIR BRANCH TAKE OFF
Scale: NTS

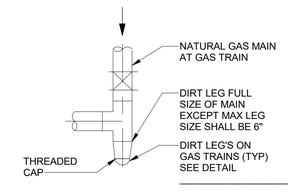

NOTE:
1. TYPICAL FOR ALL END OF RUN PIPING BRANCHES AND ELEVATION CHANGES UNLESS OTHERWISE NOTED.

3 NATURAL GAS DRIP TRAP/DIRT LEG
Scale: NTS

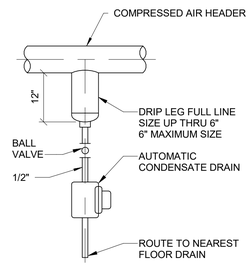

NOTES:

1. CONTRACTOR SHALL UTILIZE DRIP LEGS AND DRAIN TRAPS AHEAD OF RISERS, AT THE ENDS OF MAINS, AHEAD OF EXPANSION JOINTS, AND AHEAD OF VALVES, AND REGULATORS.

2. ON LONG SPANS OF AIR PIPING, DRIP LEGS AND DRAIN TRAPS SHALL BE PROVIDED AT INTERVALS OF ABOUT 500 FEET.

8 COMPRESSED AIR AUTOMATIC CONDENSATE DRAIN DETAIL
Scale: NTS

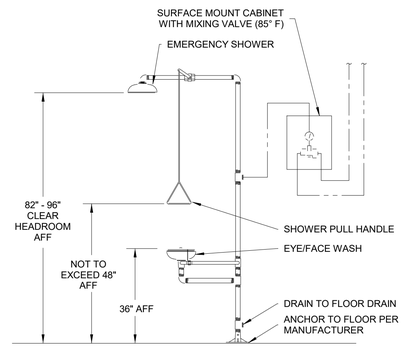

5 EYEWASH AND SHOWER DETAIL
Scale: NTS

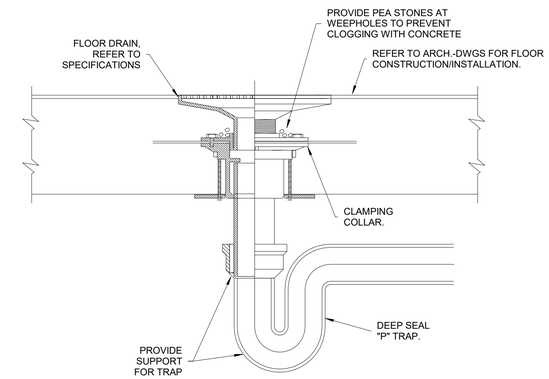

2 FLOOR DRAIN DETAIL
Scale: NTS

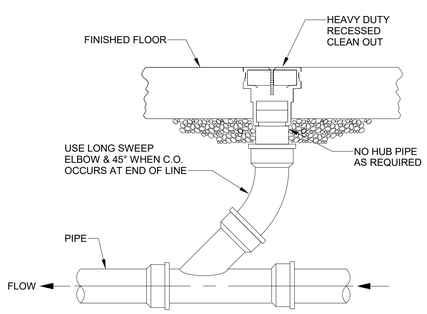

7 FLOOR CLEAN-OUT (FCO) DETAIL
Scale: NTS

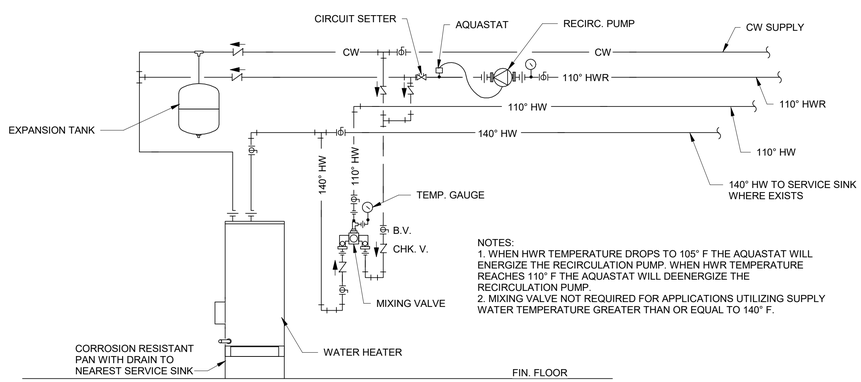

NOTES:
1. WHEN HWR TEMPERATURE DROPS TO 105° F THE AQUASTAT WILL ENERGIZE THE RECIRCULATION PUMP. WHEN HWR TEMPERATURE REACHES 110° F THE AQUASTAT WILL DEENERGIZE THE RECIRCULATION PUMP.
2. MIXING VALVE NOT REQUIRED FOR APPLICATIONS UTILIZING SUPPLY WATER TEMPERATURE GREATER THAN OR EQUAL TO 140° F.

4 DOMESTIC ELECTRIC WATER HEATER WITH RE-CIRCULATING PUMP
Scale: NTS

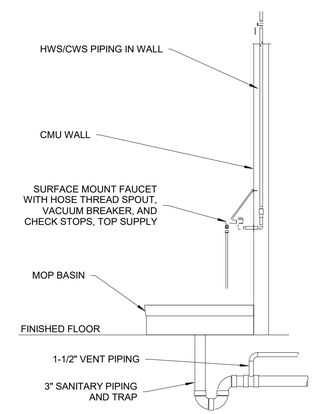

1 MOP SINK DETAIL
Scale: NTS

CLIENT

Rolesville
Genuine Community • Capital Connection
Est. 1837

ISSUES

ISSUE	ISSUANCE	DATE
A	OWNER REVIEW SET	05/05/2022
0	BUILDING PERMIT & BID SET	07/01/2022

CONSULTANTS

WITHERS RAVENEL

WithersRavenel
Engineers | Planners | Surveyors

SEAL

NORTH CAROLINA PROFESSIONAL SEAL 054060 ENGINEER DANIEL IGO

Daniel M. Igo

Digitally signed by Daniel M. Igo
DN: C=US, Email=dan.igo@ibigroup.com, CN=Daniel M. Igo
Reason: I am approving this document
Date: 2022.03.21 08:08:06-04'00'

PRIME CONSULTANT

IBI GROUP
421 Fayetteville Street, Suite 1609
Raleigh, NC 27601, USA
tel 919 851 4211
ibigroup.com

PROJECT

ROLESVILLE PUBLIC WORKS

805 E. YOUNG STREET
ROLESVILLE NC

PROJECT NO: 135941	
DRAWN BY: **P. PATIL**	CHECKED BY: **D. IGO**
PROJECT MGR: **M. HUMIENNY**	APPROVED BY: **D. IGO**
SCALE: **As indicated**	DATE: **03/29/22**

SHEET TITLE

PIPING DETAILS

SHEET NUMBER **P501** | ISSUE **0**

BIM 360://135941-Rolesville_Public_Works R2020/135941-Rolesville-MECH_v20.rvt

SCALE CHECK 1 in 10mm

2022-09-20 2:37:06 PM

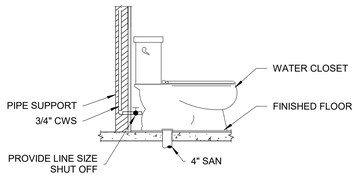

NOTES:
1. FOR CONTINUATION OF PIPING SEE PLANS.

7 FLOOR MOUNTED WATER CLOSET
Scale: NTS

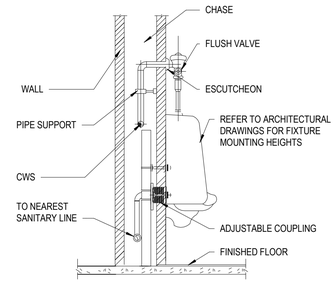

6 Wall Hung Urinal
Scale: NTS

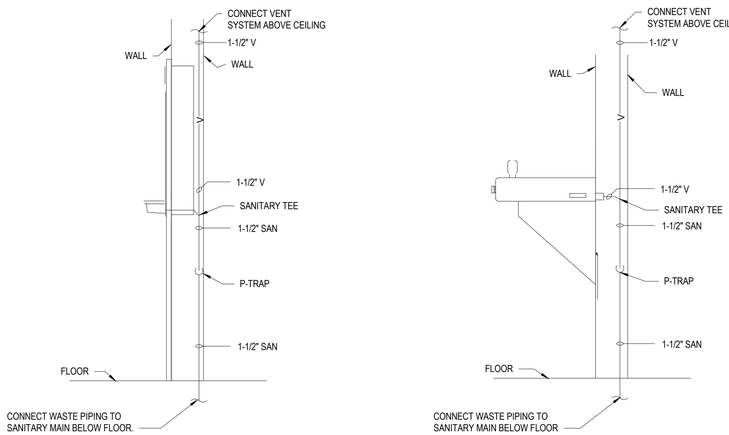

5 DRINKING FOUNTAIN DETAIL
Scale: NTS

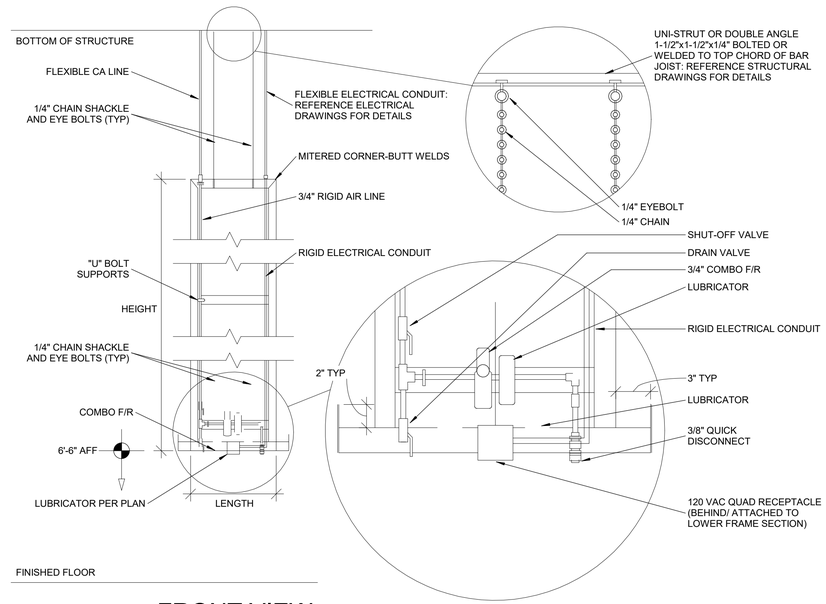

FRONT VIEW

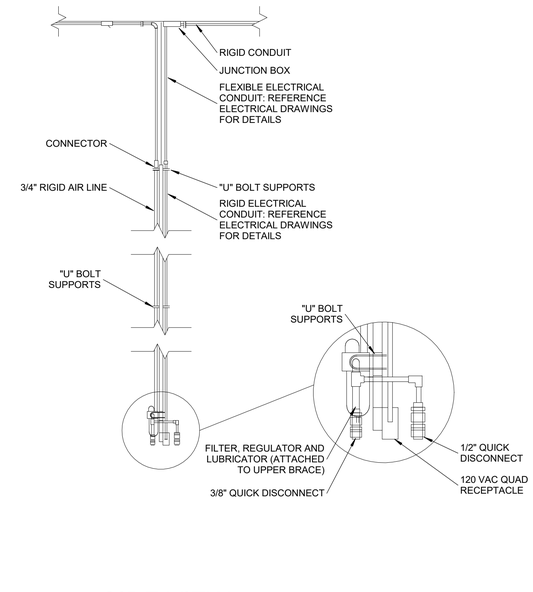

SIDE VIEW

NOTE:
1. REFERENCE ELECTRICAL DRAWINGS FOR CONDUIT SIZES.
2. APPROXIMATE WEIGHT OF ASSEMBLY IS 150 POUNDS.
3. TRAPEZE HUNG FROM UNISTRUT OR DOUBLE ANGLE BOLTED OR WELDED TO STRUCTURE WITH 1/4" EYE BOLT.
4. ALL FLEXIBLE AIR LINE AND ELECTRICAL CONDUIT TO BE PROVIDED BY CONTRACTOR.
5. ALL BUTT WELDS TO BE GOUND SMOOTH.

3 TRAPEZE ELECTRIC AND AIR DETAIL
Scale: NTS

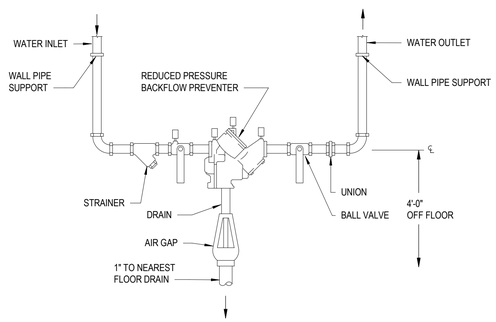

4 BACKFLOW PREVENTER DETAIL
Scale: NTS

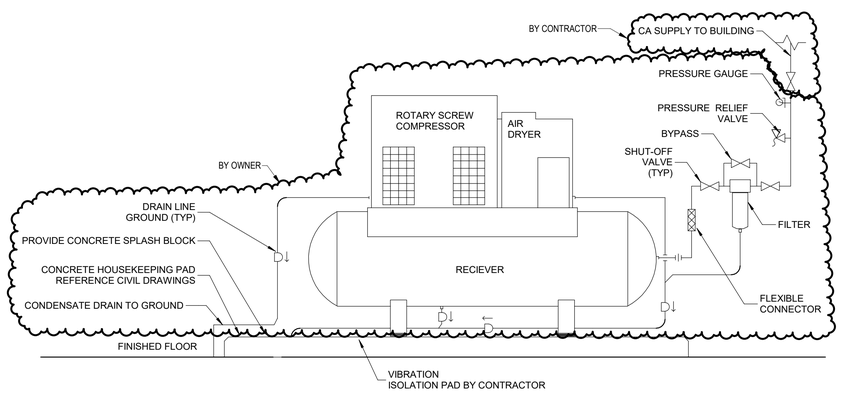

2 COMPRESSOR (ROTARY SCREW), RECEIVER MOUNTED AND AIR DRYER DETAIL
Scale: NTS

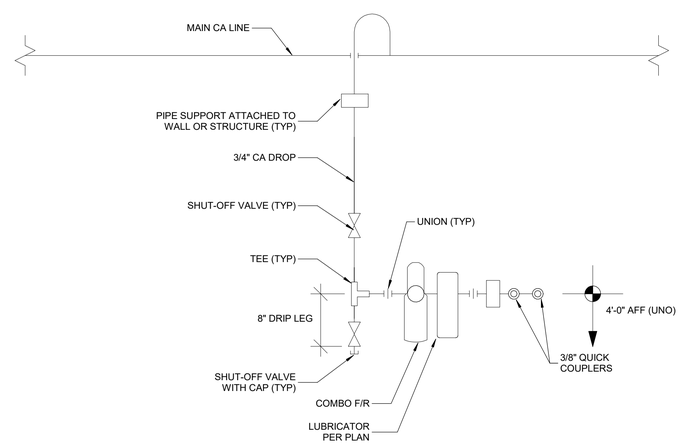

1 COMPRESSED AIR OUTLET WITH DUAL QC
Scale: NTS

2022-09-20 2:37:15 PM

CLIENT

Rolesville
Genuine Community • Capital Connection
Est. 1837

ISSUES

ISSUE	ISSUANCE	DATE
A	OWNER REVIEW SET	05/05/2022
0	BUILDING PERMIT & BID SET	07/01/2022

CONSULTANTS

WITHERS RAVENEL

WithersRavenel
Engineers | Planners | Surveyors

SEAL

NORTH CAROLINA PROFESSIONAL SEAL 054060 ENGINEER DANIEL IGO

Daniel M. Igo

Digitally signed by Daniel M. Igo
DN: C=US, E=digo@ibigroup.com, O=IBI Group, CN=Daniel M. Igo
Reason: I am approving this document
Date: 2022.09.21 16:19:42-04'00'

PRIME CONSULTANT

IBI GROUP
421 Fayetteville Street, Suite 1609
Raleigh, NC 27601, USA
tel 919 851 4211
ibigroup.com

PROJECT

ROLESVILLE PUBLIC WORKS
805 E. YOUNG STREET
ROLESVILLE NC

PROJECT NO: 135941	
DRAWN BY: **P. PATIL**	CHECKED BY: **D. IGO**
PROJECT MGR: **M. HUMIENNY**	APPROVED BY: **D. IGO**
SCALE: **As indicated**	DATE: **04/14/22**

SHEET TITLE
PIPING DETAILS

SHEET NUMBER **P502**
ISSUE **0**

BIM 360://135941-Rolesville_Public_Works R2020/135941-Rolesville-MECH_v20.rvt

10mm
SCALE CHECK
1 in

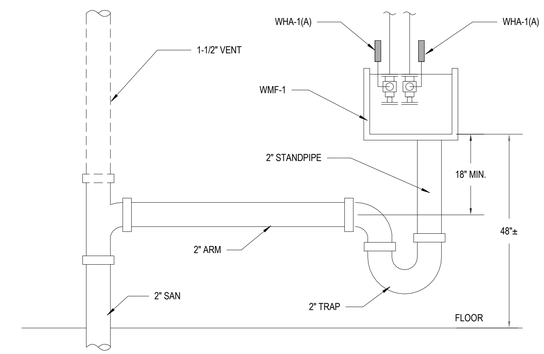

2 ICE MAKER OUTLET BOX
Scale: NTS

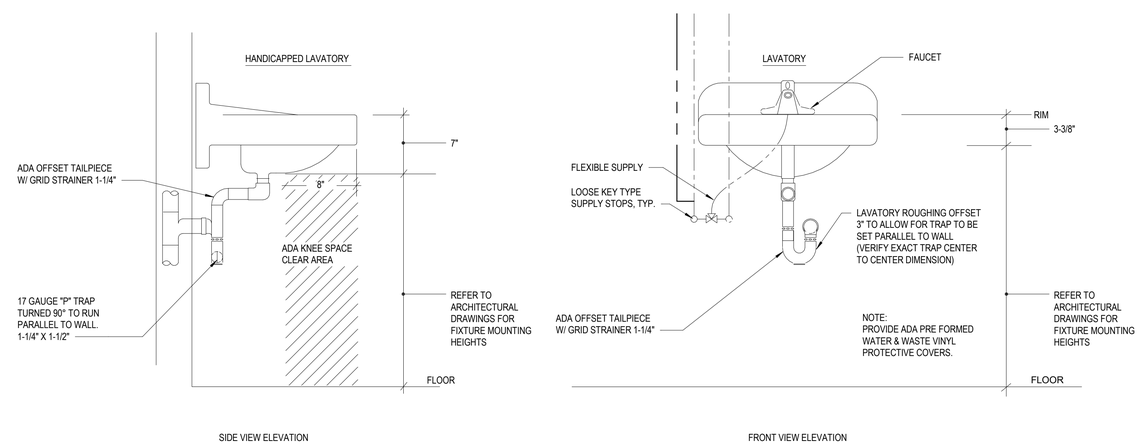

1 LAVATORY DETAIL
Scale: NTS

CLIENT

Rolesville
Genuine Community • Capital Connection
Est. 1837

COPYRIGHT

ISSUES

ISSUE	ISSUANCE	DATE
0	BUILDING PERMIT & BID SET	07/01/2022

CONSULTANTS

WITHERS RAVENEL

WithersRavenel
Engineers | Planners | Surveyors

SEAL

NORTH CAROLINA PROFESSIONAL SEAL 054060 ENGINEER DANIEL IGO

Daniel M. Igo

Digitally signed by Daniel M. Igo
DN: C=US, O=ibigroup.com, O=IBI Group, CN=Daniel M. Igo
Reason: I am approving this document
Date: 2022.09.21 16:18:25-04'00'

PRIME CONSULTANT

IBI

IBI GROUP
421 Fayetteville Street, Suite 1609
Raleigh, NC 27601, USA
tel 919 851 4211
ibigroup.com

PROJECT

ROLESVILLE PUBLIC WORKS

805 E. YOUNG STREET
ROLESVILLE NC

PROJECT NO: 135941	
DRAWN BY: **P. PATIL**	CHECKED BY: **D. IGO**
PROJECT MGR: **M. HUMIENNY**	APPROVED BY: **D. IGO**
SCALE: **12" = 1'-0"**	DATE: **06/23/22**

SHEET TITLE

PIPING DETAILS

SHEET NUMBER **P503**

ISSUE **0**

BIM 360://135941-Rolesville_Public_Works R2020/135941-Rolesville-MECH_v20.rvt

SCALE CHECK 1 in 10mm

2022-09-20 2:37:23 PM

OIL WATER SEPARATOR SCHEDULE

MARK	SYSTEM SERVED	LOCATION	FLOW RATE (GPM)	CAPACITY (GAL.)	TANK DIMENSIONS (INCH)	INLET / OUTLET DIA.	DESIGN BASIS MANUFACTURER	DESIGN BASIS MODEL	REMARK
OWS-01	TRENCH DRAINS IN WAREHOUSE	WAREHOUSE	314 GPM	562 GALLONS	103" LONG, 50" OD	6" / 6"	STRIEM	OT-500	BID ALTERNATE, REFER PLAN
OWS-01	TRENCH DRAINS IN EQUIPMENT SERVICE BAYS 1 & 2	WAREHOUSE	100 GPM	250 GALLONS	68" L X 33" W X 51-1/2" H	4" / 4"	STRIEM	OS-100	

OIL WATER SEPARATOR NOTES:

1. CONTRACTOR SHALL INSTALL OIL/WATER SEPARATOR(S), PIPING, AND EQUIPMENT (INLET/OUTLET SHUT OFF VALVES, SENSORS, VENTS, GAUGES, ECT.) IN ACCORDANCE WITH THE MANUFACTURERS' INSTALLATION INSTRUCTIONS, INDUSTRY STANDARD RECOMMENDED PRACTICES AND FEDERAL, STATE AND LOCAL REGULATIONS.
2. PROVIDE STAINLESS STEEL LEVEL SENSOR FLOATS
3. PROVIDE NEAMA 4 CONTROL PANEL FOR LEVEL SENSOR FLOATS & LEAK DETECTION CONTROL
4. INSTALL UNDERGROUND OIL/WATER SEPARATOR(S) AT LOCATIONS AND TO ELEVATIONS INDICATED ON THE DRAWINGS.
5. PROVIDE EXTENSION SECURED TO MEET FINISH FLOOR COATING INSIDE AND OUTSIDE. CHEMTHANE 2240 POLYURETHANE (15 MILS DFT), GASKETED AIR AND WATERTIGHT BOLTED NON-SKID SAFETY PATTERN TOP. SUITABLE AS FLOOR PLATE WHEN SET FLUSH WITH FLOOR.
6. PROVIDE UL LISTED AND UL SU2215 APPROVED INTERFACE/OIL LEVEL SENSOR AND CONTROLS.
7. OIL/WATER SEPARATOR SHALL BE SUPPLIED WITH AN AUDIBLE AND VISUAL ALARM SYSTEM THAT INDICATES HIGH LEVEL AND HIGH-HIGH LEVEL (AUDIBLE AND VISUAL) OF ACCUMULATED OIL IN THE OIL/WATER SEPARATOR. A SILENCE CONTROL SHALL BE PROVIDED FOR THE AUDIBLE ALARMS. POWER SHALL BE 115V/1 PHASE.
8. OIL/WATER SEPARATOR(S) SHALL BE STARTED, OPERATED AND MAINTAINED ACCORDING TO THE MANUFACTURER'S OIL/WATER SEPARATOR USERS' MANUAL.
9. PROVIDE INTERNAL TRAP LEG TO REDUCE INSTALLATION SPACE REQUIREMENTS AND ALLOWS CLEANOUT ACCESS THROUGH THE REMOVAL OF THE COVER.
10. PROVIDE SEDIMENT BUCKET, GALVANIZED STEEL WITH PERFORATED OUTLET WEIR TO TRAP SOLIDS AND PERMIT LIQUID PASSAGE. ALL WASTE MATERIAL ENTERING SEPARATOR MUST PASS THROUGH BUCKET WHERE SOLIDS AND SEDIMENT ARE RETAINED FOR REMOVAL.

BASIS OF DESIGN PLUMBING FIXTURE SCHEDULE

SYMBOLS	DESCRIPTION	DCW	DHW	SAN	SAN V
EMER-1	EMERGENCY SHOWER & EYE WASH STATION EQUAL TO BRADLEY CORP. MODEL S19314BF ADA COMPLIANT. PROVIDE THERMOSTATIC MIXING VALVE BRADLEY CORP. MODEL S19-2250.	3/4"	3/4"	-	-
EWC-1	WATER COOLER (ACCESSIBLE, WALL HUNG, HIGH / LOW W/ BOTTLE FILLER): HALSEY TAYLOR MODEL HTHB-HAC8BLSS-WF WATER COOLER WITH ALL STAINLESS STEEL CABINETS AND BOTTLE FILLER. PROVIDE A MCQUIRE MODEL 166LK SUPPLY WITH LOOSE KEY STOP VALVE, C8912C P-TRAP AND A 113C16G17 END OUTLET WASTE MOUNTED INSIDE CABINET.	1/2"	-	1 1/4"	1 1/4"
FCO	DURA-COATED CAST IRON BODY OR SAME AS DRAINAGE PIPING MATERIAL INSTALLED WITH ADJUSTABLE FLOOR CLEANOUT AND POLISHED NICKEL BRONZE TOP, ZURN 1400 SERIES.	-	-	-	-
FD-1	FLOOR DRAIN (TOILET AND JANITOR ROOMS-3"): ZURN MODEL ZN415-6S-3NL WITH PUSH-ON CONNECTION, TRAP PRIMER CONNECTION AND A 6" SQUARE, NICKEL, BRONZE STRAINER.	-	-	3"	2"
FD-2	FLOOR DRAIN (SHOWERS-2"): ZURN MODEL ZN415-6S-3NL WITH PUSH-ON CONNECTION AND A 2" SQUARE, NICKEL, BRONZE STRAINER. PROVIDE A TRAP SEAL ON ALL FLOOR DRAINS IN SHOWER DRYING AREAS.	-	-	2"	1 1/2"
FS-1	FLOOR SINK FOR ICE MACHINE: ZURN MODEL Z1910, 8" X 8" X 6" DEPTH CAST IRON BODY AND SQUARE, WHITE ACID RESISTING PORCELINE ENAMEL INTERIOR AND TOP, FULL GRATE	-	-	3"	-
HB-1	HOSE BIBB (STANDARD): PRIER MODEL C-355, HOSE BIBB WITH INTEGRAL VACUUM BREAKER.	3/4"	-	-	-
IM-1	WATER SUPPLY BOX (REFRIG. ICE MAKER): GUY GREY, MODEL SSIB1AB, 304 STAINLESS STEEL ICE MAKER OUTLET BOX. PROVIDE BRASS SHUT-OFF VALVE IN BOX WITH 1/2" SWEAT OR THREADED INLET AND 1/4" OD COPPER TUBE COMPRESSION OR SWEAT OUTLET. PROVIDE TUBE LINE TO EQUIPMENT CONNECTION PER EQUIPMENT MANUFACTURER'S SIZE AND INSTALLATION INSTRUCTIONS.	3/4"	-	-	-
L-1	LAVATORY (ACCESSIBLE, WALL HUNG, GRID DRAIN): ZURN MODEL Z5350 SERIES VITREOUS CHINA, FAUCET HOLES 4" CENTER, WITH WALL HANGER, PROVIDE ZURN Z7442-XL-FC CAST BRASS CENTERSET SINGLE CONTROL LAVATORY WITH INTEGRAL 5" SPOUT, CERAMIC DISC CARTRIDGE TEMPERATURE LIMIT STOP, 0.5 GPM VANDAL RESISTANT PRESSURE COMPENSATING MALE AERATOR. PROVIDE Z8743-PC GRID STRAINER, Z8700 SERIES P-TRAP, Z8800 SERIES TOP WITH FLEXIBLE SUPPLIES AND Z8946-1-NT ADA TRAP, STOP AND SUPPLY INSULATED PROTECTORS.	1/2"	1/2"	1 1/2"	1 1/4"
MP-1	MOP SINK : FIAT PRODUCT MODEL TSB500, TERAZZO BASIN, FLOOR MOUNT, 36" X 36" RECTANGULAR, STAINLESS STEEL SIDE WALL PANELS AND CAPS. PROVIDE P-TRAP. PROVIDE SERVICE SINK FAUCET T&S MODEL B-0665-BSTR.	3/4"	3/4"	4"	2"
RPBP-1	REDUCED PRESSURE BACKFLOW PREVENTER: FEBCO, MODEL LF909 (6") REDUCED PRESSURE BACKFLOW PREVENTER WITH A SERIES 860 AIR GAP DRAIN WITH 6" OUTLET. INSTALL UNIT WITH CENTERLINE A MAXIMUM OF 4'-6" AFF. REFER TO DETAIL OF DRAWINGS.	2"	-	-	-
SB-1	SERVICE BASIN: ELKAY MODEL SS81362 SINK, 14" GAUGE ONE COMPARTMENT SINK CONSTRUCTED FROM HIGH QUALITY 304 SERIES STAINLESS STEEL FOR MAXIMUM CORROSION RESISTANCE WITH LEGS. COMPARTMENT DIMENSIONS: 36"L X 24"W X 14"D. 8" BACKSPLASH WITH FAUCET HOLES FOR EASY INSTALLATION. OVERALL DIMENSION: 39"L X 27-1/2"W X 44"H. PROVIDE P-TRAP. PROVIDE SERVICE SINK FAUCET T&S MODEL B-0665-BSTR.	1/2"	1/2"	3"	1 1/2"
SH-1	SHOWER VALVE AND HEAD ASSEMBLY (ACCESSIBLE, TILE): ADA COMPLIANT FLORESTONE MODEL 40-62H, BARRIER FREE SHOWER UNIT, WITH STAINLESS STEEL CURTAIN ROD, SYMMONS PRESSURE BALANCE MIXING VALVE WITH CONCEALED CHECK STOPS, MOEN HAND-HELD SHOWER HEAD WITH HOSE AND CHROME-PLATED SLIDE BAR, STAINLESS STEEL CORNER GRAB BAR, STAINLESS STEEL RECESSED SOAP DISH WHITE NAUGAHYDE FOLDING WHEELCHAIR TRANSFER SEAT, SUPPLY 2" BRASS DRAIN. PROVIDE SHOWER HEAD WITH VALVE.	1/2"	1/2"	2"	-
SK-1	SINK SINGLE BOWL: ELKAY MODEL ELUHAD2115, 23-1/2" X 18-1/4" 18 GAUGE TYPE 304 STAINLESS STEEL UNDERMOUNT SINGLE BOWL SINK WITH FULLY COATED UNDERSIDE INSULATION. 8" BOWL DEPTH. PROVIDE WATTS MODEL 2-9-3ST STAINLESS STEEL STRAINER AND 4" TAILPIECE. PROVIDE AND INSTALL ZURN MODEL Z871B4-XL WIDESPREAD FAUCET WITH COLOR CODED 4" WRIST BLADE HANDLES, 5-3/8" SWING GOOSENECK SPOUT, QUARTER TURN CERAMIC DISC CARTRIDGES, HCT HOT/COLD TEXT INDEXES, 2.2 GPM PRESSURE COMPENSATING AERATOR, FINISH: POLISHED CHROME. ADA COMPLIANT.	1/2"	1/2"	1 1/2"	1 1/2"
TD-1	TRENCH DRAIN: ZURN MODEL Z886-HD-DGE (8603N), 6" WIDE MODULAR FRP TRENCH DRAIN, 7 FT LONG CHANNELS NEUTRAL, POSITIVE MECHANICAL CONNECTION BETWEEN CHANNEL SECTIONS. FRAMES SHALL HAVE REBAR AND MECHANICALLY LOCK INTO THE CONCRETE. TD-1 SHALL CONSIST OF 2 SECTIONS, WITH BOTTOM OUTLET AT CENTER. 2 END CAPS AT THE OUTER SECTIONS. HEAVY DUTY CLASS E REINFORCED STAINLESS STEEL GRATE.	-	-	3"	-
UR-1	URINAL (ACCESSIBLE, WALL HUNG) : ZURN MODEL Z5758.207.00 VITREOUS CHINA FLUSH VALVE URINAL. PROVIDE WITH THE FOLLOWING FEATURES AND OPTIONS: 0.125 GPF, 3/4" TOP SPUD, 2" I.P.S. OUTLET FLANGE AND RUBBER GASKET WITH INTEGRAL TRAP, 14" EXTENDED RIM FOR ADA COMPLIANCE, VANDAL RESISTANT OUTLET STRAINER. COLOR - WHITE, ZURN ADJUSTABLE CARRIER, CONTROL STOP ASSEMBLY, ZURN MODEL 6003AV-ULF 0.125 GPF MANUAL FLUSH VALVE, ADA COMPLIANT. MOUNTING HEIGHT 17" AFF.	3/4"	-	2"	1 1/2"
WC-1	WATER CLOSET STANDARD (FLOOR MOUNTED, FLUSH VALVE): ZURN MODEL Z5665, FLOOR MOUNTED VITREOUS CHINA FLUSH VALVE WATER CLOSET. PROVIDE WITH FOLLOWING FEATURES AND OPTIONS: 1.6 GPF, 1 1/2" TOP SPUD, 2-1/8" FULLY GLAZED TRAP WAY, SIPHON-JET FLUSH ACTION, ELONGATED STANDARD WHITE OPEN FRONT SEAT WITH STAINLESS STEEL CHECK HINGE. COLOR - WHITE. ZURN ADJUSTABLE CARRIER, ZURN MODEL Z6000AV 1.6 GPF MANUAL FLUSH VALVE.	1"	-	4"	2"
WC-2	WATER CLOSET (FLOOR MOUNTED, FLUSH VALVE, ADA COMPLIANT): ZURN MODEL Z5665, FLOOR MOUNTED VITREOUS CHINA FLUSH VALVE WATER CLOSET. PROVIDE WITH FOLLOWING FEATURES AND OPTIONS: 1.6 GPF, 1 1/2" TOP SPUD, 2-1/8" FULLY GLAZED TRAP WAY, SIPHON-JET FLUSH ACTION, ELONGATED STANDARD WHITE OPEN FRONT SEAT WITH STAINLESS STEEL CHECK HINGE. COLOR - WHITE. ZURN ADJUSTABLE CARRIER, ZURN MODEL Z6000AV 1.6 GPF MANUAL FLUSH VALVE. ADA COMPLIANT.	1"	-	4"	2"
WCO-1	WALL CLEANOUT - ZURN MODEL Z1446 WITH ROUND ACCESS COVER	-	-	-	-
WH-1	WALL HYDRANT (NON-FREEZE): WOODFORD MODEL 30CP WALL HYDRANT INTEGRAL VACUUM BREAKER.	3/4"	-	-	-
WHA-1	WATER HAMMER ARRESTER: HYDRARESTER 650 SERIES, SIZE AS RECOMMENDED BY MANUFACTURE OR SCHEDULE ON DRAWINGS. INSTALL ON HOT AND COLD WATER BRANCH LINES CONTAINING SINGLE LEVER FAUCETS, FLUSH VALVES, OR ANY OTHER QUICK CLOSING VALVES. SHOCK SHALL BE PLACED BETWEEN LAST TWO FIXTURES, IF MORE THAN ONE ON A DEAD END BRANCH. REFER TO RISER DIAGRAM ON CONTRACT DRAWINGS FOR TYPICAL LOCATIONS. COORDINATE WITH DESIGN ENGINEER FOR ADDITIONAL CLARIFICATION OF SCOPE.	-	-	-	-

DOMESTIC WATER HEATER (ELECTRIC) SCHEDULE

MARK	AREA SERVED	LOCATION	STORAGE CAPACITY (GAL)	RECOVERY (GPH) @ 100° 40-140 °F	ELECTRICAL DATA NO. OF ELEMENTS	KW	VOLTS	PHASE	TANK SIZE (APPROX) (IN)	THERMAL EXPANSION TANK (GAL)	DESIGN BASIS MFR	DESIGN BASIS MODEL NO.	REFERENCE DWG NO.	REFERENCE SPEC SECTION NO.	REMARKS
EWH-01	TOILET	MEZZANINE FLOOR	50	56	3	14 W	208 V	1	50"H x 24"D	10	Bradford White	CEHD50(A)(kW) 3*CF	P102		

DOMESTIC WATER HEATER (ELECTRIC) NOTES

1. UNIT MANUFACTURER TO PROVIDE LOCKABLE DISCONNECT SWITCH AND INSTALLED BY ELECTRICIAN AND MUST BE COMPLIANT WITH SPEC'S
2. PROVIDE ASME EXPANSION TANK AS SCHEDULED.
3. CONTRACTOR TO PROVIDE A 2018 NCPC (BASED ON 2015 IPC) CODE COMPLIANT, 3" HIGH GALVANIZED SHEET METAL DRAIN PAN SEALED WATERTIGHT (FURNISHED AND INSTALLED BY PLUMBING CONTRACTOR).

DHW RECIRCULATING PUMP SCHEDULE

MARK	AREA/SYSTEM SERVED	LOCATION	TYPE	DESIGN FLOW (GPM)	FEET OF LIQUID TOTAL DYNAMIC HEAD	LIQUID HANDLED TYPE	MOTOR DATA (ENERGY EFFICIENT T-FRAME) MOTOR HP (NOTE 1)	MOTOR VOLTAGE	MOTOR PHASE	REFERENCE DWG NO.	DESIGN BASIS MFR	DESIGN BASIS MODEL NO.	REFERENCE SPEC SECTION NO.	REMARKS
CP-01	EWH-01	MEZZANINE FLOOR	INLINE	50	20	DOMESTIC HOT WATER	1/4	115	1	P-102	BELL & GOSSETT	SERIES E-60		

DHW PUMP NOTES

1. MOTOR HP SELECTED TO BE BASED ON MOTOR BEING NON OVERLOADING THROUGHOUT THE PUMP CURVE.
2. PUMP HEADS ARE ESTIMATES ONLY FOR BIDDING PURPOSES. FINAL PUMP HEADS ARE TO BE CONFIRMED BY D/B CONTRACTOR AND/OR MFR/SUPPLIER.
3. PROVIDE AQUASTAT WITH TIMER AND DISCONNECTS BY DIV 26.
4. PROVIDE MAIN CUT OFF SWITCH (MANUAL) FOR PUMP TO CUT OFF POWER AS REQUIRED UNDER ASHRAE STANDARD 9075, PARAGRAPH 7.6.
5. PROVIDE PIPE STANDS TO SUPPORT PUMP IF SUSPENDED.
6. INSTALL PUMP PER DETAIL ON DRAWINGS.

CLIENT

Rolesville
Genuine Community • Capital Connection
Est. 1837

ISSUES

ISSUE	ISSUANCE	DATE
A	OWNER REVIEW SET	05/05/2022
0	BUILDING PERMIT & BID SET	07/01/2022

CONSULTANTS

WITHERS RAVENEL

WithersRavenel
Engineers | Planners | Surveyors

SEAL

NORTH CAROLINA PROFESSIONAL SEAL 054060 ENGINEER DANIEL IGO

Daniel M. Igo

Digitally signed by Daniel M. Igo
DN: cn=Daniel M. Igo, o=IBI Group, ou=On-Behalf-Of, sp=Delegated, ou=approving this document
Reason: I am approving this document
Date: 2022-09-22 15:45:59-04'00'

PRIME CONSULTANT

IBI

IBI GROUP
421 Fayetteville Street, Suite 1609
Raleigh, NC 27601, USA
tel 919 851 4211
ibigroup.com

PROJECT

ROLESVILLE PUBLIC WORKS

805 E. YOUNG STREET
ROLESVILLE NC

PROJECT NO: 135941	
DRAWN BY: **P. PATIL**	CHECKED BY: **D. IGO**
PROJECT MGR: **M. HUMIENNY**	APPROVED BY: **D. IGO**
SCALE:	DATE: **03/29/22**

SHEET TITLE

PLUMBING SCHEDULE

SHEET NUMBER **P601** | ISSUE **0**

BIM 360://135941-Rolesville_Public_Works R2020/135941-Rolesville-MECH_v20.rvt

SCALE CHECK 1 in | 10mm

2022-09-22 2:36:25 PM

GENERAL NOTES

FIT-UP/START-UP RELATED ITEMS

1 WHERE ALTERNATE DESIGN BASE PRODUCTS ARE APPROVED FOR INSTALLATION, SUBMIT SHOP DRAWINGS OF PROPOSED INSTALLATION. PROVIDE REQUIRED DESIGN AND ANCILLARY EQUIPMENT MODIFICATION AND SUPPLEMENTATION, AT NO ADDITIONAL COST TO OWNER

2 COORDINATE FINAL EQUIPMENT CONNECTION STYLES, TYPES, SIZES AND LOCATIONS WITH REVIEWED/CERTIFIED SHOP DRAWINGS AND AS-BUILT CONDITIONS. PROVIDE NECESSARY SIZE REDUCTION OR INCREASE AND CONNECTION TYPE AS REQUIRED BY THE PURCHASED EQUIPMENT. PIPING ARRANGEMENTS SHALL NOT IMPOSE NON-DESIGN LOADS ON EQUIPMENT CONNECTIONS: PROVIDE ADDITIONAL SUPPORT WORK AS REQUIRED TO MEET MANUFACTURER’S LIMITS

3 MAINTAIN CLEARANCE REQUIREMENTS OF EQUIPMENT MANUFACTURER'S, OWNER STANDARDS, NATIONAL ELECTRICAL CODE (NEC), APPLICABLE FEDERAL, STATE AND LOCAL CODES, AND REGULATIONS

4 COORDINATE PIPING AND DUCTWORK ROUTING TO ENSURE MINIMUM CLEARANCE ON BOTH SIDES OF ELECTRICAL BUS DUCTS, AND MINIMUM FRONT AND SIDE ACCESS CLEARANCES TO ELECTRICAL PANELS

5 MAINTAIN MIN. 6'-9" HEADROOM CLEARANCE FOR PIPING, CONDUIT AND DUCTWORK PASSING OVER CATWALKS

6 DO NOT ROUTE MECHANICAL WORK BELOW ANYWHERE THAT WILL OBSTRUCT THE FUNCTIONS OF MONORAILS, HATCHES OR TRAP DOORS

7 DO NOT ROUTE MECHANICAL WORK IN ELECTRICAL SUBSTATIONS UNLESS SERVING ELECTRICAL SUBSTATIONS

8 WHEN ROUTING MECHANICAL WORK BELOW OR ADJACENT TO ELECTRICAL SUBSTATIONS, COORDINATE WITH ELECTRICAL TRADES

9 LOCATE THERMOSTATS 48" ABOVE FLOOR, UNLESS OTHERWISE NOTED

10 FIT BUTTERFLY VALVES WITH STRAIGHT RUN OF PIPE SUCH THAT VALVE DISC DOES NOT ENTER ADJACENT FITTINGS OR EQUIPMENT. LOCATE THERMOWELLS SO AS TO PREVENT VIBRATION OR INTERFERENCE WITH VALVE OPERATION

11 PROVIDE MANUAL AND AUTOMATIC AIR VENTS AND VACUUM BREAKERS AT PIPING HIGH-POINTS AND WHERE NECESSARY TO PRECLUDE PIPING SYSTEM/COMPONENT OR OPERATING FAILURE DUE TO AIR BINDING, VACUUM COLLAPSE OR WATER HAMMER

12 PROVIDE TRASH HANDLING FULL PORT BALL DRAIN VALVES WITH NIPPLE AND CAP AT PIPING LOW-POINTS AND AT BASE OF RISERS

13 PROVIDE TEMPORARY OR PERMANENT PIPING, HOSE, VALVES, FILTERS/STRAINERS, PRESSURE AND TEMPERATURE GAUGES, FLOW AND OTHER INSTRUMENTATION, FOR PURGING, CLEANING, FLUSHING, DISINFECTING, TESTING, START UP AND OPERATION, WHETHER SUFFICIENTLY INDICATED IN THE DOCUMENTS OR NOT. AFTER CLEANING/FLUSHING, REMOVE TEMPORARY FILTER/STRAINER ELEMENTS AND CLEAN STRAINERS

14 PROVIDE APPROVED DOUBLE CONTAINMENT OR LIPPED, SAFELY DRAINED, 16 GAGE GALVANIZED SHEET DRIP PANS UNDER MECHANICAL ITEMS LOCATED OVER ANY BUS DUCT OR ELECTRICAL EQUIPMENT

15 PROVIDE 16 GAGE GALVANIZED SHEET METAL HEAT SHIELDS AT ALL POINTS WHERE A HOT PIPE, FLUE STACK, HEATING AIR, OR RADIANT HEAT IS DIRECTED AT AN ELECTRICAL BUS DUCT, CABLE TRAY, CONTROL PANEL OR HEAT SENSITIVE CONSTRUCTION SURFACE OR EQUIPMENT

16 PROVIDE WATER HAMMER ARRESTERS AT RAPID ACTION FLOW CONTROL DEVICES AND AT PLUMBING FIXTURES, PER MANUFACTURER’S INSTRUCTIONS AND PLUMBING & DRAINAGE INSTITUTE STANDARD PDI-WH-201

17 PROVIDE INSULATION ON SURFACE, WHERE TEMPERATURE COULD BURN, FOR PERSONNEL PROTECTION WITHIN 8'-0" OF ALL OPERATING LEVELS

18 PROVIDE ENERGY LOCKOUT/TAGOUT PROVISIONS FOR SYSTEMS WHERE REQUIRED BY OSHA, OWNER'S STANDARDS, AND WHERE INDICATED ON DRAWINGS. COMPLY WITH MOST STRINGENT REQUIREMENTS

19 REFER TO SUPPLEMENTARY PROJECT SPECIFIC NOTES FOR ADDITIONAL REQUIREMENTS

20 FOR EXHAUST FAN DISCHARGES, PLUMBING VENTS AND FLUES, MAINTAIN A MINIMUM OF 20'-0" HORIZONTALLY FROM, OR 4'-0" (2'-0" FOR PLUMBING VENTS) VERTICALLY ABOVE OUTDOOR AIR INTAKES AND 30'-0" FROM COOLING TOWERS

GENERAL CONDITIONS AND COORDINATION RELATED ITEMS

1 THE DRAWINGS AND SPECIFICATIONS ARE PRODUCED REPRESENTING WORK TO BE DONE IN ACCORDANCE WITH ALL APPLICABLE FEDERAL, STATE AND LOCAL CODES. THE LOCAL CODE AUTHORITY, OR THE AUTHORITY HAVING JURISDICTION, HAS THE AUTHORITY TO INTERPRET CODE REQUIREMENTS IN ITS JURISDICTION. THESE INTERPRETATIONS MAY VARY FROM INFORMATION PRESENTED IN THE DOCUMENTS. THE CONTRACTOR SHALL INFORM THE OWNER'S REPRESENTATIVE AND THE ARCHITECT-ENGINEER OF THE DIFFERENCES AND SHALL PROCEED WITH THE WORK ONLY UPON RECEIVING THEIR AGREEMENT WITH THE LOCAL CODE AUTHORITY’S INTERPRETATION.

2 SEAL ALL EXTERIOR WALL PENETRATIONS WEATHER TIGHT.

3 BIDDER (CONTRACTOR) SHALL VISIT THE SITE, EXAMINE AND VERIFY CONDITIONS UNDER WHICH THE WORK SHALL BE CONDUCTED AND ACCOUNT FOR FIELD CONDITIONS AND DIMENSIONAL CONSIDERATIONS IN ALL BIDS SUBMITTED.

4 SOME STANDARD SYMBOLS, ABBREVIATIONS AND DETAILS INDICATED IN CONTRACT DOCUMENTS WILL NOT BE APPLICABLE TO THIS SPECIFIC CONTRACT ISSUE.

5 CONTRACTOR SHALL REVIEW ALL OF THE DOCUMENTS, INCLUDING SPECIFICATION, OF INTERFACING TRADES AND CONTRACTS PRIOR TO BIDDING AND COMMENCEMENT OF WORK TO ENSURE COMPLETE COORDINATION OF FINISHED WORK.

6 BEFORE AWARD OF CONTRACT, IF THERE ARE QUESTIONS ABOUT INTENT, CLARITY, APPLICATION OF NOTES, OR WORK SHOWN OR SPECIFIED, OR IF CONFLICTING DIRECTIONS ARE FOUND IN THE DOCUMENTS, REQUEST WRITTEN CLARIFICATION FROM THE ARCHITECT/ENGINEER. ANY CLARIFICATION PROVIDED AFTER CONTRACT AWARD SHALL BE AT NO ADDITIONAL COST TO OWNER.

7 CONFIRM THAT EXISTING SYSTEMS ARE INACTIVE AND PURGED BEFORE TAPPING INTO THEM, UNLESS OTHERWISE DIRECTED.

8 SCHEDULE AND COORDINATE UTILITY SHUTDOWNS AND DEMOLITION WORK WITH OWNER.

9 DO NOT INTERFERE WITH OWNER'S OPERATIONS. SCHEDULE PLANNED SHUTDOWNS WITH OWNER'S WRITTEN APPROVAL, AT LEAST ONE WEEK IN ADVANCE. PROCEED WITH WORK ONLY AFTER RECEIPT OF THIS WRITTEN AUTHORIZATION.

10 COMPLY WITH OWNER'S CORPORATE STANDARDS AND ALL APPLICABLE LOCAL STANDARDS, CODES AND REGULATIONS.

11 SILICONE-CONTAINING PRODUCTS SHALL NOT BE BROUGHT ONTO OR USED IN ANY PRODUCT ON THIS SITE WITHOUT WRITTEN PERMISSION OF THE OWNER.

12 COORDINATE AND SCHEDULE EXTENT OF ANY DEMOLITION WORK WITH OWNER.

13 DEMOLITION WORK SHALL BE COMPLETED TO THE EXTENT INDICATED OR SPECIFIED AND AS DIRECTED BY THE OWNER'S REPRESENTATIVE.

14 DEMOLISHED MATERIALS, UNLESS OTHERWISE DIRECTED, BECOME PROPERTY OF THE CONTRACTOR AND SHALL BE PROMPTLY REMOVED FROM THE SITE BEFORE THE END OF EACH WORKDAY. OWNER RETAINED SALVAGED EQUIPMENT SHALL BE PROPERLY PROTECTED FOR REUSE OR CRATED FOR PROTECTION AND DELIVERED TO OWNER'S SITE STORAGE (ANY HAZARDOUS MATERIAL SHALL BE PROPERLY DISPOSED OF PER ALL APPLICABLE FEDERAL, STATE AND LOCAL CODES).

15 REFER TO TRUSS SPACE ALLOCATION DETAIL FOR ROUTING OF MECHANICAL AND ELECTRICAL WORK. THE ALLOCATION SHALL BE ADHERED TO UNLESS OTHERWISE NOTED ON DRAWINGS. EXCEPTIONS SHALL REQUIRE SPECIFIC WRITTEN APPROVAL BY THE ARCHITECT/ENGINEER. NOTE THAT ELECTRIC LIGHT POSITIONS TAKE PRECEDENCE OVER MECHANICAL ITEMS IN ANY AND ALL LOCATIONS FOR AREAS WITH OR WITHOUT CEILINGS; THE CONTRACTOR SHALL COORDINATE AS REQUIRED. IF THERE IS NO APPARENT SOLUTION TO A SPECIFIC COORDINATION ISSUE, CONTACT THE ARCHITECT-ENGINEER FOR A RESOLUTION.

17 COORDINATE AND PERFORM WORK BASED ON REVIEWED CERTIFIED SHOP DRAWINGS, FIELD CHECKS OF INSTALLED WORK AND LATEST REVISION OF CONTRACT DOCUMENTS, INCLUDING ALL INTERFACING DISCIPLINE DRAWINGS, BEFORE PROCEEDING WITH PROCUREMENT, DETAILING, FABRICATION OR INSTALLATION. THE REVIEW OF A SHOP DRAWING IS INTENDED TO ASSIST THE CONTRACTOR VERIFY THEIR INTERPRETATION OF THE DOCUMENTS.

18 FIELD CHECK AND COORDINATE WORK WITH CONTRACT DOCUMENTS AND ALL OTHER TRADES FOR: INVERT ELEVATIONS, ELEVATION ROUTING, SPACE PRIORITIES, DIMENSIONS AND CLEARANCES TO ENSURE THAT NO CODE CONFLICT OR INTERFERENCE WITH OTHER WORK OCCURS. LACKING SUCH COORDINATION, CORRECTIVE WORK ACCEPTABLE TO OWNER SHALL BE DONE BY THE CONTRACTOR, WITHIN SCHEDULE, AT NO ADDITIONAL COST.

19 COORDINATE PURCHASED EQUIPMENT CONCRETE PAD AND ROOF CURB LOCATIONS, SIZES, AND CONSTRUCTION REQUIREMENTS, WITH REVIEWED AND CERTIFIED SHOP DRAWINGS AND ARCHITECTURAL AND STRUCTURAL TRADES.

20 REFER TO AND COORDINATE WITH ARCHITECTURAL DRAWINGS FOR LOCATION AND PROPER FLASHING OF ROOF CURBS AND SUPPORTS.

21 REFER TO AND COORDINATE WITH ARCHITECTURAL REFLECTED CEILING PLANS FOR EXACT LOCATION OF DIFFUSERS, REGISTERS AND GRILLES. COORDINATE THE LOCATION OF FIRE PROTECTION SPRINKLER HEADS WITH THESE ITEMS.

22 REFER TO APPLICABLE CODES, AS WELL AS CIVIL, MECHANICAL AND ARCHITECTURAL DRAWINGS AND SPECIFICATIONS, FOR BUILDING SURFACES PENETRATION AND SEALING REQUIREMENTS.

23 FIRE STOP AND SEAL ALL FIRE RATED PARTITION AND FLOOR PENETRATIONS IN COORDINATION WITH ARCHTIECTURAL TRADES. PROVIDE WATER STOPS AS PART OF THIS WORK INCLUDING PROVISION OF DAMS AROUND ALL FLOOR PENETRATIONS AND LINK SEAL FOR WALL PENETRATIONS.

24 DO NOT ROUTE ANY PIPING, DUCTWORK OR EQUIPMENT WITHIN THE "DEDICATED ELECTRICAL SPACE" PER NATIONAL ELECTRICAL CODE (NEC).

25 DO NOT ROUTE ANY PIPING, DUCTWORK OR EQUIPMENT WITHIN ANY CRANE TRAVEL OR MAINTENANCE AREAS OR ZONES.

26 BEFORE PENETRATING EXISTING CONCRETE OR SOIL SURFACES, CONSULT WITH ALL LOCAL UTILITIES PROGRAMS FOR THE AREA OF WORK AND VERIFY LOCATION OF ALL EXISTING UNDERGROUND UTILITIES AND STRUCTURES BY USE OF 'ELECTRONIC' OR SIMILAR NON-INVASIVE DETECTOR DEVICES. IF POTENTIAL INTERFERENCES ARE DISCOVERED, PROPOSE ALTERNATE ROUTING AND ASSOCIATED COSTS TO OWNER AND ARCHITECT/ENGINEER FOR APPROVAL BEFORE PROCEEDING.

27 ALL CURBS FOR EQUIPMENT, ROOF OPENINGS, ETC. SHALL BE PROVIDED BY ARCHITECTURAL UNLESS NOTED OTHERWISE. SEE ARCHITECTURAL/STRUCTRAL DRAWINGS FOR LOCATION AND DETAILS OF CURBS. SEE SECTION 077200, ROOF ACCESSORIES, AND 055000, METAL FABRICATIONS, FOR ASSOCIATED SPECIFICATIONS. COORDINATE CONSTRUCTION AND PLACEMENT OF CURBS AND ROOF OPENINGS WITH APPROVED MECHANICAL EQUIPMENT SHOP DRAWINGS.

28 LOCATE ALL VENTILATION AIR (OUTSIDE AIR) INTAKES AWAY FROM EXHAUST AIR, VENTS AND ALL OTHER POSSIBLE CONTAMINANTS PER ALL APPLICABLE CODES.

29 ROUTE ALL DUCTWORK AND PIPING TO CLEAR ALL INTERFERENCES INCLUDING GUSSET PLATES, ETC., COORDINATE WITH ALL TRADES.

30 CONTRACTOR TO ENSURE THAT ALL PRESCRIBED PROCESS EQUIPMENT CLEARANCES ARE COORDINATED WITH APPROVED EQUIPMENT SHOP DRAWINGS IN ADVANCE OF FABRICATION AND PLACEMENT OF ANY DUCTWORK, PIPING, ETC. ANY POTENTIAL INTERFERENCES SHOULD BE BROUGHT TO THE ATTENTION OF THE ARCHTECT/ENGINEER OF RECORD IMMEDIATELY.

31 CONTRACTOR TO ENSURE THAT ALL CRANE MANUFACTURER RECOMMENDED AND REQUIRED CLEARANCES BE MAINTAINED DURING ROUTING OF PIPING, SHEET METAL, EQUIPMENT, ETC., BASED ON FINAL APPROVED CRANE AND EQUIPMENT SHOP DRAWINGS. ANY POTENTIAL CLEARANCE DEVIATION SHOULD BE BROUGHT TO THE ATTENTION OF THE ARCHTECT/ENGINEER OF RECORD IMMEDIATELY.

32 BOTTOM OF DUCT AND BOTTOM OF PIPE ELEVATIONS SHOWN ON PLANS ARE FOR GENERAL REFERENCE PURPOSES ONLY. THEY REPRESENT THE INITIAL RECOMMENDED HEIGHTS BASED ON DESIGN INTENT DRAWINGS. CONTRACTOR SHALL CONFIRM ALL PIPE, EQUIPMENT, DUCTWORK, CONTROLS, ACCESSORY ELEVATIONS WITH OTHER TRADES, FIELD CONDITIONS, FINAL PURCHASED MANUFACTURER’S INSTALLATION AND OPERATIONS MANUALS, AND FINAL COORDINATED SHOP DRAWINGS. CONTRACTOR IS RESPONSIBLE FOR ENSURING ALL PIPING, DUCTWORK AND EQUIPMENT MEETS CODE CLEARANCES, OWNER CLEARANCE REQUIREMENTS AND CRANE CLEARANCE REQUIREMENTS, AS APPLICABLE.

HVAC RELATED ITEMS

1 DO NOT SUPPORT DUCTWORK FROM TOP CHORD OF JOIST AND JOIST GIRDER

2 DUCT ROUTES SHOWN ARE SCHEMATIC IN NATURE. FIELD VERIFY ROUTING AND CONNECTION POINTS AND PROVIDE WORK AS REQUIRED BY FIELD CONDITIONS. CRITICAL ROUTING LOCATIONS ARE DIMENSIONED FROM COLUMN CENTERLINES ON PLANS

3 CONTRACTOR TO PROVIDE ALL REQUIRED BALANCING DEVICES SUCH AS DAMPERS, ETC. IN ORDER TO ACHIEVE THE SYSTEM CFM’S AS SHOWN, WHETHER THE DEVICES ARE SHOWN ON THE DRAWINGS OR NOT. DO NOT USE DIFFUSER/REGISTER DAMPERS TO BALANCE SYSTEMS, OTHER THAN FOR MINOR FINAL ADJUSTMENTS.

GENERAL NOTES

4 DUCTWORK FLOW DIAGRAMS MAY NOT INDICATE ALL CONNECTIONS, DAMPERS, DEVICES REQUIRED BY PHYSICAL LAYOUT, ROUTING OR BY EQUIPMENT MANUFACTURER. REFER TO PLANS, SECTIONS, DETAILS, SPECIFICATIONS AND REVIEWED/CERTIFIED SHOP DRAWINGS. WHERE CONFLICT BETWEEN CONTRACT DOCUMENTS IS PERCEIVED, REQUEST ARCHITECT-ENGINEER INTERPRETATION PRIOR TO FABRICATION AND INSTALLATION

5 ACCESS PANELS IN DUCTWORK AND CEILINGS SHALL BE PROVIDED WHERE REQUIRED FOR OPERATION, BALANCING OR MAINTENANCE OF ALL MECHANICAL EQUIPMENT.

6 DIMENSIONS SHOWN ON DRAWINGS FOR ALL DUCTWORK ARE INSIDE CLEAR, OVERALL DUCT SIZES AND ASSOCIATE WALL, FLOOR AND CEILING OPENINGS SHALL BE INCREASED TO ACCOMMODATE DUCT LINER AND/OR INSULATION. WHERE STRUCTURAL CONDITIONS DEEM IT NECESSARY TO CHANGE THE SIZE OR SHAPE OF ANY DUCT, THE EQUIVALENT FREE AREA SHALL BE MAINTAINED.

7 RETURN AIR DUCTWORK IN RETURN AIR PLENUM SHALL BE THERMALLY INSULATED WHERE INDICATED ON CONTRACT DOCUMENTS

8 RETURN AIR DUCTWORK TO AIR CONDITIONING UNIT, EXPOSED TO MECHANICAL EQUIPMENT ROOM ENVIRONMENT, SHALL BE INSULATED

9 INSULATE AND VAPOR SEAL ALL OUTSIDE AIR INTAKE DUCTWORK FROM ROOF CURB OR WALL LOUVER TO AHU

10 PROVIDE FIRE DAMPERS, SMOKE DAMPERS AND COMBINATION FIRE AND SMOKE DAMPERS IN ALL RATED SURFACE PENETRATIONS AS REQUIRED BY APPLICABLE CODE(S). ADDITIONALLY, PROVIDE ADJACENT ACCESS DOORS AS REQUIRED FOR SERVICING THE DEVICE. SEE ARCHITECTURAL DRAWINGS FOR THE APPLICABLE SURFACE RATING

11 FLEXIBLE DUCT CONNECTORS SHALL BE INSTALLED IN ACCESSIBLE AREAS ONLY. MAXIMUM ALLOWABLE FLEX DUCT IS 5'-0" TOTAL LENGTH. SUPPORT TO AVOID SAGGING OR KINKING

12 PROVIDE CONSTRUCTION SET, POST CONSTRUCTION SET AND A SET OF ATTIC STOCK SPARE FILTERS FOR ALL EQUIPMENT INSTALLED UNDER THIS CONTRACT PER SPECIFIED REQUIREMENTS

13 INSTALLATION AND FABRICATION OF ALL DUCTWORK SHALL CONFORM WITH THE LATEST EDITION OF SMACNA INDUSTRIAL DUCT STANDARDS, ASHRAE HANDBOOKS AND LOCAL CODES.

14 CONNECTION TO EQUIPMENT SHALL BE VERIFIED WITH MANUFACTURER'S CERTIFIED DRAWINGS. TRANSITIONS TO ALL EQUIPMENT SHALL BE VERIFIED AND PROVIDED FOR EQUIPMENT FURNISHED.

15 DIMENSIONS SHALL BE FIELD-VERIFIED AND COORDINATED PRIOR TO PROCUREMENT OR FABRICATION. COORDINATE THE WORK WITH OTHER TRADES INVOLVED. FIELD MODIFICATIONS SUCH AS OFFSETS IN PIPING OR DUCTWORK (INCLUDING DIVIDED DUCTWORK) NEEDED DUE TO OBSTRUCTIONS OR INTERFERENCES SHALL BE PROVIDED AT NO ADDITIONAL COST.

16 PROVIDE VOLUME CONTROL DAMPERS ON MAIN DUCT AND EACH BRANCH DUCT WHETHER SHOWN ON PLANS OR NOT.

17 THE CONTRACTOR SHALL FULLY COORDINATE THE MECHANICAL WORK WITHIN ITSELF AND THE WORK OF ALL TRADES TO PROVIDE COMPLETE AND OPERABLE SYSTEMS WITHOUT INTERFERENCE

18 PROVIDE INSULATION ON ALL EXTERIOR DUCT WORK AND EXTERIOR PIPING PER SPEC. SECTION 200700 INCLUDING PROTECTIVE WEATHER COVERING.

19 COORDINATE SIZE AND LOCATION OF LOUVERS WITH STRUCTURAL AND ARCHITECTURAL CONTRACTORS, INCLUDING ALLOWANCE FOR MOTORIZED DAMPERS IF APPLICABLE. ALSO COORDINATE WITH ELECTRICAL CONTRACTOR FOR POWER FOR MOTORIZED DAMPER.

INSTRUMENTATION RELATED ITEMS

1 LOCATE PRESSURE AND TEMPERATURE GAUGES SUCH THAT THEY ARE READABLE FROM THE OPERATING FLOOR LEVEL. OTHERWISE, PROVIDE REMOTE ELEMENT READING INSTRUMENTS MOUNTED ON A 16-GAGE GALVANIZED GAUGE BOARD, READABLE FROM OPERATING FLOOR. REFER TO SPECIFICATIONS, FLOW DIAGRAMS AND VALVE/EQUIPMENT SCHEDULES FOR SYSTEM PRESSURE AND TEMPERATURE OPERATING RANGES. SELECT INSTRUMENTS TO OPERATE IN MIDDLE THIRD OF SYSTEM OPERATING RANGE, UNLESS INDICATED OTHERWISE. MARK PRESSURE GAUGES CALIBRATED FOR ELEVATION

2 INSTALL FLOW-MEASURING DEVICES WITH A MINIMUM STRAIGHT RUN OF PIPING CONSISTING OF 10 DIAMETERS UPSTREAM AND 5 DIAMETERS DOWNSTREAM OF DEVICE. CONTRACTOR SHALL COORDINATE AND PROVIDE FOR ANY ADDITIONAL REQUIREMENTS OF DEVICE MANUFACTURER

3 PROVIDE PROPERLY GRADUATED TEST GAUGES AND THERMOMETERS WITH RANGES AS REQUIRED FOR SERVICE

INSULATION RELATED ITEMS

1 INSULATE AND SECTIONALLY VAPOR SEAL SURFACES WHERE FLUID TEMPERATURES LESS THAN 65 DEGF CAN OCCUR. MAINTAIN VAPOR BARRIER CONTINUITY SECTIONAL SEALS BETWEEN JOINTS TO COLD SURFACE: ON MAXIMUM 24-FOOT CENTERS, AT CHANGES OF DIRECTION, INTERFACES, CONNECTIONS, PENETRATIONS AND DEVICES

2 EXTEND VALVE STEMS AND DAMPER OPERATORS BEYOND INSULATION AS REQUIRED AND MAINTAIN VAPOR BARRIER CONTINUITY

3 IN WEATHER-EXPOSED LOCATIONS, INSTALL INSULATED PIPING VALVES WITH THE STEM DOWN OR AT 4 O'CLOCK POSITION, WHERE SAFETY/OPERATING AND OTHER CONDITIONS GOVERN

4 REPAIR EXISTING PIPE INSULATION DAMAGED DURING WORK AND MAINTAIN VAPOR SEAL INTEGRITY. ISOLATE WITH VAPOR BARRIER, NEW WORK FROM OLD WORK

5 WRAP WATER SUPPLIES AND P-TRAP UNDER SINKS ACCORDING TO ADA CODE.

PIPING RELATED ITEMS

1 PIPE ROUTES SHOWN ARE SCHEMATIC IN NATURE. FIELD VERIFY ROUTING, AND CONNECTION POINTS AND INSTALL WORK AS REQUIRED BY FIELD CONDITIONS. MAJOR VARIATIONS FROM THAT WHICH IS INDICATED ON THE DRAWINGS SHALL BE APPROVED BY THE ARCHITECT-ENGINEER

2 PIPING FLOW DIAGRAMS MAY NOT INDICATE ALL CONNECTIONS, VALVES, DRAINS, VENTS, PIPING SPECIALTIES, AND OTHER DEVICES OR EQUIPMENT REQUIRED BY PHYSICAL LAYOUT, ROUTING OR BY EQUIPMENT MANUFACTURER FOR A COMPLETE, PROPERLY FUNCTIONING, CODE COMPLIANT AND OPERATING SYTSEMS. COORDIANTE AND PROVIDE AS REQUIRED. SEE I&C DRAWINGS AND DETAILS FOR ADDITIONAL REQUIREMENTS. REFER TO PLANS, SECTIONS, DETAILS, SPECIFICATIONS AND REVIEWED/CERTIFIED SHOP DRAWINGS. WHERE CONTRACT DOCUMENTS CONFLICT, REQUEST ARCHITECT-ENGINEER INTERPRETATION

3 PROVIDE MINIMUM FOUR-INCH HIGH, EPOXY PROTECTED, CONCRETE HOUSEKEEPING PADS UNDER MECHANICAL EQUIPMENT, UNLESS SPECIFICALLY STATED AS OMITTED OR INDICATED AS A DIFFERENT DEPTH. VARIATIONS MAY BE ACCEPTABLE DUE TO THE REQUIREMENTS OF THE MOUNTING, GROUTING, ELEVATION OF EQUIPMENT BEING INSTALLED. COORDINATE PAD LOCATION AND SIZES WITH REVIEWED/CERTIFIED SHOP DRAWINGS AND ALL RELATED TRADES

4 TAP BRANCH-PIPING CONNECTIONS FROM TOP OF MAIN FOR ALL SERVICES EXCEPT CLOSED LOOP CHILLED WATER, HEATING HOT WATER, OR AS SPECIFICALLY INDICATED ON DRAWINGS. INSTALL ISOLATION VALVES AT EACH PIECE OF EQUIPMENT ON BRANCH LINES.

5 VALVES LOCATED IN TRUSS SPACE SHALL BE SAFELY REACHABLE AND OPERABLE FROM A CATWALK, SERVICE PLATFORM, OR LIFT DEVICE. ROUTE AND ARRANGE PIPING AND VALVING, AND PROVIDE U-JOINTED, TWO-BEARING SUPPORTED, VALVE HANDWHEEL EXTENSION RODS, AS REQUIRED TO MEET THIS CRITERIA

6 INSTALL LOOSE TRIM FURNISHED WITH EQUIPMENT, AND IF NECESSARY, SUPPLEMENT WITH LIKE QUALITY TRIM FOR A COMPLETE, PROPERLY FUNCTIONING AND OPERATING SYSTEM. REFER TO REVIEWED/CERTIFIED SHOP DRAWINGS

7 PROVIDE MANUAL CHAIN OPERATOR FOR EXTENDED/SUPPORTED STEM VALVES SIZED 3" AND LARGER, EXCEPT FOR DEAD-END VALVES, IN EQUIPMENT SPACES AND WHERE INDICATED, WHICH CANNOT BE REACHED FROM NORMAL OPERATING LEVEL. PROVIDE CHAINS TO WITHIN 4'-0" ABOVE FLOOR, UNLESS OTHERWISE INDICATED ON DRAWINGS. OFFSET CHAINS THAT FALL IN AISLE WAYS, OVER EQUIPMENT OR OTHERWISE CAUSE OBSTRUCTION, AND SECURE TO NEAREST COLUMN, ANCHOR OR WALL

8 DO NOT OBSTRUCT STRUCTURE DOORS OR FURNISHED EQUIPMENT ACCESS DOORS, HATCHES, COVERS OR PANELS WITH PIPING, CONDUIT OR DUCT

9 ROUTE DRAIN, VENT, RELIEF, AND SERVICE PIPING TO AND FROM EQUIPMENT, AS DIRECTED BY EQUIPMENT MANUFACTURER. TEST, FLUSH AND FILL AS REQUIRED FOR A COMPLETE OPERATING SYSTEM

11 ROUTE SAFE FLUIDS VENT DISCHARGE AND DRAIN PIPING TO NEAREST HUB OUTLET OR FLOOR DRAIN. ROUTE BELOW FINISHED FLOOR WHEN CROSSING AISLES

12 ROUTE SAFE FLUIDS HIGH ELEVATION SOURCED AUTOMATIC AND MANUAL DEVICE VENTS TO NEAREST COLUMN AND TERMINATE 4'-0" AFF. TERMINATE WITH PLUGGED END BALL VALVE (BA)

13 ROUTE SCREEN TERMINATED FUEL GAS VENTS TO ATMOSPHERE PER APPLICABLE CODES/STANDARDS/REGULATIONS/UNDERWRITER'S REQUIREMENTS WITHOUT PRODUCING ADJACENT/DOWNWIND HAZARDS

14 ROUTE AND SIZE VENTS FROM NATURAL GAS REGULATORS THROUGH ROOF OR WALL PER APPLICABLE CODE AND MANUFACTURER’S RECOMMENDATIONS

15 ROUTE HAZARDOUS FLUIDS VENTS, INCLUDING REFRIGERANT VENTS, TO ATMOSPHERE PER APPLICABLE CODES/STANDARDS/REGULATIONS/UNDERWRITER‘S REQUIREMENTS WITHOUT PRODUCING ADJACENT/DOWNWIND HAZARDS

16 PROVIDE 16 GAGE GALVANIZED STEEL SAFETY SPLASH COVERS OVER DRAINS WHERE STEAM CONDENSATE BLOWDOWN OCCURS

17 PROVIDE SECURED SPLASH BLOCKS FOR ROOF-MOUNTED EQUIPMENT DRAIN POINTS. CONFIRM WITH OWNER AND APPLICABLE CODES THAT FLUID IS ALLOWED TO BE ROUTED TO ROOF DRAINS

18 DO NOT SUPPORT PIPING FROM TOP CHORD OF JOIST AND JOIST GIRDER

19 CONTRACTOR SHALL COORDINATE AND SIZE ALL REFRIGERANT LIQUID AND SUCTION LINES WITH MANUFACTURER BASED ON ROUTING BETWEEN EQUIPMENT, AND PROVIDE SIZE AND QUANTITY OF LINES AS REQUIRED TO MEET SYSTEM CAPACITY AND CONTROL AS SPECIFIED

20 PROVIDE ACCESS DOORS AS MAY BE REQUIRED TO ALL VALVES, CLEAN-OUTS AND OTHER DEVICES IN WALLS AND CEILINGS. DO NOT EXCEED 24" - 36" HEIGHT ABOVE SOFFIT/HARD CEILING ACCESS DOOR/CEILING FOR VALVE ACCESS.

21 INDOOR AND OUTDOOR FUEL GAS APPLIANCE PRESSURE REGULATORS AND GAS TRAIN ASSEMBLIES SHALL BE VENTED TO THE OUTSIDE ATMOSPHERE AT A MINIMUM DISTANCE OF 15'-0" FROM ANY MECHANICAL OR GRAVITY AIR INTAKE OPENINGS. PROVIDE MEANS TO PREVENT WATER FROM ENTERING THE VENT AND BLOCKAGE DUE TO INSECTS AND FOREIGN MATTER. SIZE VENTS PER THE EQUIPMENT MANUFACTURER’S RECOMMENDATIONS AND DO NOT COMBINE WITH ANY OTHER VENT. CONFIRM PROPOSED VENTING WITH LOCAL CODE AUTHORITIES

PLUMBING RELATED ITEMS

1 COORDINATE LOCATION OF FLOOR DRAINS, HUB OUTLETS, ETC., WITH APPROVED EQUIPMENT SHOP DRAWINGS, ALL OTHER TRADES AND ASSOCIATED HOUSEKEEPING PADS IN ORDER TO ELIMINATE INTERFERENCES AND TRIP HAZARDS DUE TO DRAIN PIPING IN WALKING SPACES

2 THE PLUMBING DRAWINGS ARE SCHEMATIC IN NATURE AND SHOW THE GENERAL LAYOUT OF THE PLUMBING SYSTEM. PLUMBING CONTRACTOR TO VERIFY WITH FIELD CONDITIONS, EXACT LOCATIONS OF PLUMBING SYSTEMS.

3 PROVIDE REQUIRED, ACCESSIBLE, SURE SEAL TRAPS TO MEET SITE APPLICABLE CODES AND AS IDENTIFIED ON DRAWINGS. REFER TO SPECIFICATIONS FOR ADDITIONAL REQUIREMENTS

3 FIELD CHECK AND COORDINATE WORK WITH CONTRACT DOCUMENTS AND OTHER TRADES FOR: INVERT ELEVATIONS, ELEVATION ROUTING, SPACE PRIORITIES, DIMENSIONS AND CLEARANCES TO ENSURE THAT NO CODE CONFLICT OR INTERFERENCE WITH OTHER WORK OCCURS. LACKING SUCH COORDINATION, CORRECTIVE WORK ACCEPTABLE TO OWNER SHALL BE DONE BY THE CONTRACTOR, WITHIN SCHEDULE, AT NO ADDITIONAL COST.

4 PRIOR TO PURCHASING AND INSTALLING, THE SIZE, QUANTITY AND LOCATION OF ALL HEAT TRACING SYSTEM PANELS SHALL BE CONFIRMED WITH FIELD CONDITIONS AND THE ELECTRICAL DESIGN DRAWINGS

6 ALL HORIZONTAL SANITARY AND STORM LINE SHALL BE SLOPED DOWN IN THE DIRECTION OF FLOW IN ACCORDANCE WITH ALL CURRENT CODES & STANDARDS UNLESS NOTED OTHERWISE

7 DO NOT ROUTE DRAIN PIPING ACROSS FLOOR/AISLE OR OTHER WALKWAY SURFACES, UNLESS SPECIFICALLY NOTED

8 CONTRACTOR SHALL PROVIDE NECESSARY PIPE FITTINGS AND ADJUST ROUTING SUCH THAT PIPING IS HIGH IN STEEL AND CLEAR OF ELECTRICAL BUS WAY. CONTRACTOR SHALL PROVIDE PIPE FITTINGS AND ADJUST ROUTING SUCH THAT THERE IS NO FITTINGS, VALVE TAKE OFF OR OTHER POSSIBLE LEAK SOURCE WITHIN 5'-0" OF EITHER SIDE OF ELECTRICAL.

GENERAL NOTES

9 PIPING SHALL NOT BE INSTALLED OVER ELECTRICAL EQUIPMENT.

10 NO EQUIPMENT SHALL BE LOCATED DIRECTLY ABOVE WALLS.

11 RUN NEW WASTE PIPES AS CLOSE AS POSSIBLE TO UNDERSIDE OF FLOOR SLAB AND VENT PIPING AS CLOSE AS POSSIBLE TO SLAB ABOVE.

12 PLUMBING CONTRACTOR TO BE RESPONSIBLE FOR COORDINATION, VERIFICATION, AND CONNECTION OF ALL UTILITIES TO SITE UTILITY STUB-OUTS. REFERENCE ASSOCIATED ARCHITECTURAL, ELECTRICAL, MECHANICAL, STRUCTURAL, KITCHEN AND CIVIL DRAWINGS FOR RELATED INFORMATION.

13 INSTALL SHUT-OFF VALVES AND PIPING UNIONS AT EACH PIECE OF EQUIPMENT, PLUMBING FIXTURES, AND BRANCHES TO FIXTURE GROUPS. VALVES SHALL BE LOCATED IN AN ACCESSIBLE LOCATION, OR ACCESS PANELS PROVIDED AS NECESSARY.

14 INSTALL VACUUM BREAKERS AT ALL THREADED HOSE CONNECTIONS AND AT ALL CONNECTIONS WHERE CROSS-CONTAMINATION COULD OCCUR, UNLESS OTHER BACKFLOW PREVENTION METHOD IS SHOWN.

15 PROVIDE ACOUST-O-PLUMB PIPE CLAMPS ON ALL DOMESTIC WATER PIPES 1" AND SMALLER IN SIZE. REFER TO FLOOR PLANS AND RISER DIAGRAMS.

16 SEAL ALL EXTERIOR WALL AND ROOF PENETRATIONS WATER TIGHT.

17 VERIFY EXACT LOCATIONS OF HVAC EQUIPMENT WITH MECHANICAL DRAWINGS. VERIFY PRIOR TO ANY INSTALLATION THAT THERE IS SUFFICIENT SPACE IN WALLS, CHASES AND CEILING CAVITIES FOR PLUMBING SYSTEM PIPING, VENTS, EQUIPMENT, ETC.

18 CAULK AROUND ALL PLUMBING FIXTURES. CAULK COLOR TO MATCH FIXTURE COLOR.

19 FIRESTOP ALL PENETRATIONS THRU FIRE-RATED ASSEMBLIES. REFER TO SPECIFICATIONS AND ARCHITECTURAL DRAWINGS.

20 ALL SANITARY SEWER /STORM PIPING 4" AND LARGER SHALL BE INSTALLED AT 1/8" PER FT. MINIMUM. ALL SANITARY SEWER PIPING 3" AND SMALLER SHALL BE INSTALLED AT 1/4" PER FT. MINIMUM. SANITARY PIPING FROM HIGH EFFICIENCY/LOW-FLOW WATER CLOSETS AND URINALS SHALL BE INSTALLED AT 1/4" PER FT. MINIMUM.

21 IF APPLICABLE, SIPHONIC CONTRACTOR SHALL PROVIDE A COMPLETE DESIGNED AND INSTALLED SIPHONIC TYPE ROOF DRAINAGE SYSTEM PER ALL APPLICABLE CODES AND STANDARDS. SIPHONIC DRAWINGS ARE CONCEPTUAL ONLY!!! FINAL/ACTUAL DESIGN PROVIDED BY THE SIPHONIC CONTRACTOR.

22 PROVIDE BUILDING DRAIN WITH CLEANOUTS AT THE BASE OF EACH VERTICAL WASTE STACK; CLEANOUT SHALL BE A WALL CLEANOUT OR FLOOR CLEANOUT, BROUGHT UP TO FINISHED GROUND LEVEL OR TO THE BASEMENT FLOOR LEVEL, AS REQUIRED BY CODE.

23 PROVIDE FLOOR CLEANOUT WHERE BUILDING DRAIN EXITS THE BUILDING, WITHIN 5 FT OF THE EXTERIOR WALL. PROVIDE ADDITIONAL YARD CLEANOUT ON BUILDING DRAIN WITHIN 5 FT OF EXTERIOR WALL, AS REQUIRED.

24 ROUTE DRAIN, VENT, RELIEF, AND SERVICE PIPING TO AND FROM EQUIPMENT, AS DIRECTED BY EQUIPMENT MANUFACTURER. TEST, FLUSH AND FILL AS REQUIRED FOR A COMPLETE OPERATING SYSTEM.

25 CLEANOUTS SHALL BE INSTALLED AT EVERY CHANGE OF DIRECTION OVER 45 DEGREES, AT 100'-0" INTERVALS OF HORIZONTAL RUNS FOR OVERHEAD AND UNDERGROUND PIPING, UNLESS OTHERWISE SHOWN OR REQUIRED BY CODE.

26 INSULATE UNDERSIDE OF ROOF DRAIN SUMP AND FIRST VERTICAL STORM LINE.

27 INSULATE ALL NON VERTICAL PORTION OF STORM CONDUCTOR LINES.

28 GENERAL CONTRACTOR SHALL NOTIFY OWNER/OWNER’S REPRESENTATIVE PRIOR TO SHUTDOWN OF ANY SERVICE AFFECTING AREAS OUTSIDE OF SPACE UNDER CONTRACT.

29 FOR RENOVATION WORK IN BUILDINGS CONTAINING POST-TENSION SLABS, ALL NEW CORES SHALL BE COORDINATED WITH EXISTING POST-TENSION SLAB. CONTRACTOR SHALL X-RAY ALL PROPOSED CORE LOCATIONS TO ENSURE THAT NEW CORES FALL BETWEEN POST-TENSION BANDS.

SEISMIC DESIGN FOR NON-STRUCTURAL COMPONENTS

1 FOR ALL DESIGNS INVOLVING SEISMIC DESIGN CATEGORIES C THRU F, REFER TO ASCE (AMERICAN SOCIETY OF CIVIL ENGINEERS) / SEI (STRUCTURAL ENGINEERING INSTITUTE) 7-10, AND NCBC 2018 FOR GUIDELINES.

SUPPORT RELATED ITEMS

1 PROVIDE SUPPLEMENTARY (MISCELLANEOUS) PRIME PAINTED STEEL FOR SUPPORT, SWAY BRACING, CROSS-BRACING, AND ANCHORAGE OF PIPING, DUCTWORK, ASSOCIATED EQUIPMENT AND ANCILLARIES, IN ACCORDANCE WITH REQUIREMENTS OF THE CONTRACT DOCUMENTS, IN ORDER TO MEET SITE SEISMIC AND SYSTEM SPECIFIC INSTALLATION AND OPERATING CONDITIONS. COORDINATE SUPPLEMENTARY (MISCELLANEOUS) STEEL WITH PRIMARY (BUILDING OR TRESTLE) STRUCTURAL STEEL WORK

2 SUPPORT, BRACE, CROSS-BRACE, GUIDE AND ANCHOR AS REQUIRED SO TO IMPOSE NO PIPE/DUCT/EQUIPMENT LOAD OR MOMENT ON ANY EQUIPMENT FLANGE OR FLEXIBLE CONNECTION. DAMPEN SYSTEM TO CONTROL AND LIMIT SYSTEM AND STRUCTURE MOTION AS A RESULT OF REACTION FORCES GENERATED BY SYSTEM FLUID/AIR FLOW, INCLUDING PURGING, TESTING AND OPERATION

3 DO NOT WELD TO, CUT OR DRILL BUILDING STEEL

4 DO NOT WELD SUPPLEMENTARY (MISCELLANEOUS) STEEL TO BUILDING STEEL WITHOUT PRIOR WRITTEN APPROVAL OF PROPOSED DETAIL BY THE DESIGNING STRUCTURAL ENGINEER. WELDING TO SUPPLEMENTARY STEEL IS PERMITTED

5 USE APPROVED BEAM CLAMPS. C-CLAMPS ARE PROHIBITED

6 DO NOT HANG SUPPORTS FROM TOP CHORD OF JOIST AND JOIST GIRDER

7 CONTRACTOR SHALL SUBMIT SHOP DRAWINGS FOR ALL EQUIPMENT, PIPING AND DUCTWORK SUPPORTED BY LONG SPAN AND CAMBERED STEEL, CONFIRMING THAT EXPANSION COMPENSATION IS ADEQUATE

CLIENT

Rolesville
Genuine Community • Capital Connection
Est. 1837

COPYRIGHT

ISSUES

ISSUE	ISSUANCE	DATE
0	BUILDING PERMIT & BID SET	07/01/2022

CONSULTANTS

WITHERS RAVENEL

WithersRavenel
Engineers | Planners | Surveyors

SEAL

SEAL 054060
DANIEL IGO

Daniel M. Igo
Digitally signed by Daniel M. Igo
DN: C=US, E=dan.igo@ibigroup.com, O=IBI Group, CN=Daniel M. Igo
Reason: I am approving this document
Date: 2022.09.21 16:14:31-04'00'

PRIME CONSULTANT

IBI GROUP
421 Fayetteville Street, Suite 1609
Raleigh, NC 27601, USA
tel 919 851 4211
ibigroup.com

PROJECT

ROLESVILLE PUBLIC WORKS

805 E. YOUNG STREET
ROLESVILLE NC

PROJECT NO: 135941	
DRAWN BY: **P. PATIL**	CHECKED BY: **D. IGO**
PROJECT MGR: **M. HUMIENNY**	APPROVED BY: **D. IGO**
SCALE:	DATE: **10/13/14**

SHEET TITLE

MECHANICAL GENERAL NOTES

SHEET NUMBER
M000

ISSUE
0

BIM 360://135941-Rolesville_Public_Works R2020/135941-Rolesville-MECH_v20.rvt

SCALE CHECK
10mm
1 in

2022-09-20 2:34:47 PM

ABBREVIATIONS

AAV	AUTOMATIC AIR VENT
ABC	ABOVE BOTTOM CHORD
ABDN	ABANDONED
ABV	ABOVE
AC	AIR COMPRESSOR
AC	ACCESS COVER
AC	AFTER COOLER
ACC	AIR COOLED CONDENSER
ACC	ACCUMULATOR
ACCH	AIR COOLED CHILLER
ACFM	ACTUAL CUBIC FEET PER MINUTE
ACST	ACOUSTICAL
ACU	AIR CONDITIONING UNIT
AD	AIR DRYER
ADD	ADDENDUM
ADJ	ADJACENT
ADJT	ADJUSTABLE
ADMIN	ADMINISTRATIVE
AF	AIR FILTER
AFF	ABOVE FINISHED FLOOR
AFG	ABOVE FINISHED GRADE
AHU	AIR HANDLING UNIT
AL	ALUMINUM
ALT	ALTERNATE
ALTV	ALTITUDE VALVE
AMB	AMBIENT
AMPS	AMPERES
ANC	ANCHOR
APNL	ACCESS PANEL
APPROX	APPROXIMATE
ARCH	ARCHITECTURAL
ARRG'T	ARRANGEMENT
AS	AIR SEPARATOR
ASR	AUTOMATIC SPRINKLER RISER
ASSOC	ASSOCIATION / ASSOCIATES
ATTEN	ATTENUATOR
AVG	AVERAGE
BA	BALL VALVE
BBC	BELOW BOTTOM CHORD
BBD	BOTTOM BLOWDOWN
BC	BOTTOM CHORD OF TRUSS
BCS	BLACK CARBON STEEL
BDD	BACK DRAFT DAMPER
BETW	BETWEEN
BF	BLIND FLANGE
BF	BUTTERFLY VALVE
BFDW	BOILER FEEDWATER
BFF	BELOW FINISHED FLOOR
BFP	BACKFLOW PREVENTER
BG	BLAST GATE
BHP	BRAKE HORSEPOWER
BLDG	BUILDING
BLWDN	BLOW DOWN
BM	BEAM
BOD	BOTTOM OF DUCT
BOP	BOTTOM OF PIPE
BOS	BOTTOM OF STEEL
BOT	BOTTOM
BPV	BACK PRESSURE VALVE
BR	BRINE
BRCG	BRACING
BRKT	BRACKET
BS	BLOW-OFF SILENCER
BSMT	BASEMENT
BTU	BRITISH THERMAL UNIT
BTUH	BRITISH THERMAL UNIT PER HOUR
BULL	BULLETIN
BV	BLOW OFF VALVE
BW	BUTT WELD
BY ARCH	BY ARCHITECTURAL TRADES
C	CENTIGRADE
C/C	CENTER TO CENTER
CA	COMPRESSED AIR
CAD	COMPRESSED AIR DRYER
CAI	COMPRESSED AIR INTAKE
CAIH	COMPRESSED AIR INTAKE HOOD
CAU	CAUSTIC
CAV	CONSTANT AIR VOLUME
CB	CATCH BASIN
CCW	COUNTER CLOCKWISE
CF	CUBIC FEET
CFH	CUBIC FEET PER HOUR
CFM	CUBIC FEET PER MINUTE
CFM	CUBIC FEET PER MINUTE
CFS	CUBIC FEET PER SECOND
CHEM	CHEMICAL
CHKD PL	CHECKERED PLATE
CHPP	CHILLED WATER PRIMARY PUMP
CHSP	CHILLED WATER SECONDARY PUMP
CHWR	CHILLED WATER RETURN
CHWS	CHILLED WATER SUPPLY
CI	CAST IRON
CISP	CAST IRON SOIL PIPE
CIWP	CAST IRON WATER PIPE
CJ	CONSTRUCTION JOINT
CK	CHECK VALVE
CL	CENTERLINE
CLG	CEILING
CLR	CLEAR
CM	CENTIMETER
CO	CARBON MONOXIDE
CO	CLEAN OUT
CO2	CARBON DIOXIDE
COL	COLUMN
COMP	COMPRESSOR
CONC	CONCRETE
COND	CONDENSER (CONDENSATION)
CONN	CONNECTION
CONSTR	CONSTRUCTION
CONT	CONTINUATION (CONTINUOUS)
CONTR	CONTRACT(OR)
CP	CONTROL PANEL
CP	CENTIPOISE
CPLG	COUPLING
CPVC	CHLORINATED POLYVINYL CHLORIDE

ABBREVIATIONS

CS	CARBON STEEL
CT	COOLING TOWER
CTR	CENTER
CTWR	COOLING TOWER WATER RETURN
CTWS	COOLING TOWER WATER SUPPLY
CU	COPPER
CUH	CABINET UNIT HEATER
CV	CONTROL VALVE
Cv	FLOW COEFFICIENT
CW	CITY WATER
CW	CLOCKWISE
CWR	COOLING WATER RETURN
CWS	COOLING WATER SUPPLY
CY	CUBIC YARD
CYL	CYLINDER
D&T	DRIP AND TRAP
DAP	ACID DRAIN PUMP
DB	DRY BULB TEMPERATURE
dB	DECIBEL
DCW	DOMESTIC COLD WATER
DEG	DEGREE
DEG C	DEGREE CENTIGRADE
DEG F	DEGREE FAHRENHEIT
DEPT	DEPARTMENT
DES	DESIGN
DET	DETAIL
DEX	DIESEL ENGINE EXHAUST
DF	DRINKING FOUNTAIN
DG	DOOR GRILLE
DHW	DOMESTIC HOT WATER
DHWR	DOMESTIC HOT WATER RETURN
DI	DUCTILE IRON
DIA	DIAMETER
DIAPH	DIAPHRAGM
DIFF	DIFFUSER
DIM	DIMENSION
DISCH	DISCHARGE
DIST	DISTILLED WATER
DM	DIAPHRAGM VALVE
DN	DOWN
DP	DIFFERENTIAL PRESSURE
DPR	DAMPER
DPS	DIFFERENTIAL PRESSURE SWITCH
DR	DRAIN
DS	DISCHARGE SILENCER
DS	DOWN SPOUT
DSP	DUPLEX SUMP PUMP
DV	DIAPHRAGM VALVE
DWG	DRAWING
DWH	DOMESTIC WATER HEATER
EA	EACH
EAT	ENTERING AIR TEMPERATURE
EBH	ELECTRIC BASEBOARD HEATER
ED	EQUIPMENT DRAIN
EF	EXHAUST FAN
EFF	EFFICIENCY
EFL	EFFLUENT
EG	EXHAUST GRILLE
EHC	ELECTRIC HEATING COIL
EJ	EXPANSION JOINT
EL	ELEVATION
ELEC	ELECTRIC(AL)
ELL	ELBOW
EMER	EMERGENCY SHOWER AND EYEWASH
EMS	EMERGENCY SHOWER
EMW	EMERGENCY EYE WASH
ENCL	ENCLOSURE
ENT	ENTERING
EQ	EQUAL
EQPT	EQUIPMENT
ER	EXHAUST REGISTER
ESP	EXTERNAL STATIC PRESSURE
EST	ESTIMATED
EWC	ELECTRIC WATER COOLER
EWH	ELECTRIC WATER HEATER
EWT	ENTERING WATER TEMPERATURE
EXH	EXHAUST
EXP	EXPANSION
EXST	EXISTING
EXT	EXTERIOR
F	FAHRENHEIT
F/F	FACE TO FACE
FA	FIRE ALARM
FAI	FRESH AIR INTAKE
FAT	FINAL AIR TEMPERATURE
FC	FAIL CLOSED
FCU	FAN COIL UNIT
FD	FLOOR DRAIN
FDN	FOUNDATION
FE	FIRE EXTINGUISHER
FEC	FIRE EXTINGUISHER CABINET
FF	FINAL FILTER
FHC	FIRE HOSE CABINET
FHR	FIRE HOSE RACK/REEL
FIN	FINISH
FIXT	FIXTURE
FL	FLOOR
FLEX	FLEXIBLE CONNECTOR
FLEX	FLEXIBLE CONNECT0R
CONN	
FLG	FLANGE
FO	FAIL OPEN
FP	FAN POWERED
FP	FILTER PRESS
FP	FIRE PROTECTION
FPM	FEET PER MINUTE
FPRF	FIREPROOF
FPT	FEMALE PIPE THREAD
FRP	FIBERGLASS REINFORCED PLASTIC
FS	FLOW SWITCH
FT	FEET
FTG	FITTING
FTG	FOOTING
FTHD	FEET OF HEAD

ABBREVIATIONS

FTR	FIN TUBE RADIATION
FUT	FUTURE
FV	FOOT VALVE
GA	GAGE
GA	GATE VALVE
GA	GAUGE
GAL	GALLON
GALV	GALVANIZED
GC	GENERAL CONTRACT(OR)
GCS	GALVANIZED CARBON STEEL
GD	GLOBE DIAPHRAGM
GENL	GENERAL
GL	GLOBE VALVE
GPH	GALLONS PER HOUR
GPM	GALLONS PER MINUTE
GR	GRADE
GRL	GRILLE
H	HEIGHT
HB	HOSE BIBB
HC	HEATING COIL
HCP	HANDICAPPED
HD	HEAD
HDGAF	HOT DIPPER GALVANIZED AFTER FABRICATION
HEPA	HIGH EFFICIENCY PARTICULATE AIR FILTER
Hg	MERCURY
HGR	HANGER
HGT	HEIGHT
HH	HOSE HYDRANT
HHWR	HEATING HOT WATER RETURN
HHWS	HEATING HOT WATER SUPPLY
HO	HUB OUTLET
HORIZ	HORIZONTAL
HP	HIGH POINT
HP	HIGH PRESSURE
HP	HORSEPOWER
HR	HOSE REEL
HTCP	HEAT TRACE CONTROL PANEL
HV	HEATING AND VENTILATING
HVAC	HEATING, VENTILATING AND AIR CONDITIONING
HVU	HEATING AND VENTILATING UNIT
HWH	HOT WATER HEATER
HYD	HYDRANT
Hz	HERTZ
I&C	INSTRUMENTATION AND CONTROLS
IA	INSTRUMENT AIR
ICFM	INITIAL CUBIC FEET PER MINUTE
ID	INSIDE DIAMETER
IE	INVERT ELEVATION
IH	INTAKE HOOD
IN	INCH(ES)
IN WC	INCHES WATER COLUMN
IN WG	INCHES WATER GAUGE
INC	INCORPORATED
INSUL	INSULATION
INTR	INTERIOR
INV	INVERT
ITC	INSPECTOR TEST CONNECTION
IW	INDUSTRIAL WASTE
JC	JANITOR CLOSET
K	KIPS
KG	KNIFE GATE
kPa	KILOPASCALS
KS	KITCHEN SINK
KSF	KIPS PER SQUARE FOOT
KSI	KIPS PER SQUARE INCH
KW	KILOWATT
KWH	KILOWATT-HOUR
L	LENGTH
LAB	LABORATORY
LAV	LAVATORY
LB	POUND
LBS	POUNDS
LDB	LEAVING DRY BULB
LG	LENGTH
LH	LEFT HAND
LIN	LINEAR
LO	LOCKOUT
LP	LOW POINT
LP	LOW PRESSURE
LPM	LITERS PER MINUTE
LVA	LEAVING AIR
LVG	LEAVING
LVR	LOUVER
LWB	LEAVING WET BULB
LWT	LEAVING WATER TEMPERATURE
M	METER
MACH	MACHINE
MATL	MATERIAL
MAU	MAKE-UP AIR UNIT
MAV	MANUAL AIR VENT
MAX	MAXIMUM
MBH	THOUSAND BTU PER HOUR
MC	MIST COLLECTOR
MCC	MOTOR CONTROL CENTER
MD	MOTORIZED DAMPER
MDPR	MANUAL DAMPER
MECH	MECHANICAL
MEZZ	MEZZANINE
MFG	MANUFACTURING
MFR	MANUFACTURER
MH	MANHOLE
MIN	MINIMUM
MISC	MISCELLANEOUS
MK	MARK
MM	MILLIMETER
MO	MOTOR OPERATED
MOLWT	MOLECULAR WEIGHT
MPT	MALE PIPE THREAD

ABBREVIATIONS

MTD	MOUNTED
MUA	MAKE UP AIR
MV	MIXING VALVE
MW	MILL WATER
N2	NITROGEN
NC	NOISE CRITERIA
NC	NORMALLY CLOSED
ND	NECK DIAMETER
ND	NEEDLE VALVE
NEC	NATIONAL ELECTRIC CODE
NG	NATURAL GAS
NGM	NATURAL GAS METER
NIC	NOT IN CONTRACT
NK	NECK
NO	NORMALLY OPEN
NO	NUMBER
NOM	NOMINAL
NORM	NORMAL
NPSH	NET POSITIVE SUCTION HEAD
NPT	NATIONAL PIPE THREAD
NTS	NOT TO SCALE
OA	OUTSIDE AIR
OAD	OUTSIDE AIR DAMPER
OAI	OUTSIDE AIR INTAKE
OBD	OPPOSING BLADE DAMPER
OD	OUTSIDE DIAMETER
OPER	OPERATOR
OPNG	OPENING
OPP	OPPOSITE
ORD	OVERFLOW ROOF DRAIN
OS&Y	OUTSIDE STEM AND YOKE
OXY	OOO
OXY	OXYGEN
OZ	OUNCE
P	PUMP
P&ID	PIPING & INSTRUMENTATION DIAGRAM
PA	PIPE ANCHOR
PD	PRESSURE DIFFERENTIAL
PD	PRESSURE DROP
PDP	PRESSURE DEW POINT
PDR	PROCESS DRAIN
PDS	PRESSURE DIFFERENTIAL SWITCH
PE	POLYETHYLENE
PEN	PENETRATION
PERF	PERFORATED
PG	PIPE GUIDE
PG	PRESSURE GAUGE
PH	PHASE
PI	PRESSURE INDICATOR
PIV	POST INDICATOR VALVE
PL	PLATE
PL	PLUG VALVE
PNL	PANEL
POC	POINT OF CONNECTION
POU	POINT OF USE
PP	POWER PANEL
PREFAB	PREFABRICATED
PRESS	PRESSURE
PRI	PRIMARY
PROJ	PROJECT
PRV	PRESSURE REDUCING VALVE
PRV	PRESSURE RELIEF SAFETY VALVE
PS	PIPE SUPPORT
PS	PRESSURE SWITCH
PSF	POUNDS PER SQUARE FOOT
PSI	POUNDS PER SQUARE INCH
PSIA	POUNDS PER SQUARE INCH, ABSOLUTE
PSID	POUNDS PER SQUARE INCH, DIFFERENTIAL
PSIG	POUNDS PER SQUARE INCH, GAUGE
PT	POINT
PT	PRESSURE TRANSMITTER
PTFE	POLYTETRAFLUROETHYLENE
PVC	POLYVINYL CHLORIDE
PVDF	POLYVINYLIDENE FLUORIDE PLASTIC
PWR	POWER
QD	QUICK DISCONNECT
QDD	QUICK DISCONNECT, DRY
R or RAD	RADIUS
R or RSR	RISER
RA	RETURN AIR
RAG	RETURN AIR GRILLE
RAR	RETURN AIR REGISTER
RC	ROOF CONDUCTOR
RCP	REINFORCED CONCRETE PIPE
RD	ROOF DRAIN
RECIRC	RECIRCULATED
RED	REDUCER / REDUCTION
REF	REFERENCE/REFIGERATOR
REG	REGISTER
REQD	REQUIRED
RF	RAISED FACE
RF	RETURN FAN
RFGT	REFRIGERANT
RFGV	REFRIGERANT VENT
RH	RELATIVE HUMIDITY
RH	RIGHT HAND
RHH	ROOF HOSE HOUSE
RM	ROOM
RPBP	REDUCED PRESSURE BACKFLOW PREVENTER
RPM	REVOLUTIONS PER MINUTE
RS	ROOF SUMP
RTN	RETURN
RTU	ROOF TOP UNIT
RV	ROOF VENT
RV	RELIEF VALVE
S	SLOPE
SA	SUPPLY AIR
SA	SURGE ARRESTOR
SAG	SUPPLY AIR GRILLE
SAN	SANITARY

ABBREVIATIONS

SAR	SUPPLY AIR REGISTER
SAT	SATURATION
SCFM	STANDARD CUBIC FEET PER MINUTE
SCH	SCHEDULE
SCR	SCREW
SCV	SECTIONAL CONTROL VALVE
SD	SMOKE DETECTOR
SD	SUPPLY DIFFUSER
SEC	SECOND
SECT	SECTION
SEP	SEPARATE
SF	SUPPLY FAN
SHR	SHOWER
SHT	SHEET
SIM	SIMILAR
SLV	SLEEVE
SP	SPECIFIC
SP	STATIC PRESSURE
SPECS	SPECIFICATIONS
SQ	SQUARE
SQ FT	SQUARE FOOT
SQ YD	SQUARE YARD
SS	SERVICE SINK
SS	STRUCTURAL STEEL
SSF	SIDESTREAM FILTER
SSH	SAFETY SHOWER & EYE WASH
SST	STAINLESS STEEL
SSU	SECOND SAYBOLT UNIVERSAL
ST	STEAM TRAP
ST	STORM DRAINAGE
ST(O)	STORM DRAINAGE (OVERFLOW)
STA	STATION
STD	STANDARD
STIFF	STIFFENER
STL	STEEL
STM	STEAM
STOR	STORAGE
STR	STRAINER
STRU	STRUCTURAL
SUBST	SUBSTATION
SURF	SURFACE
SV	SMOKE VENT
SYS	SYSTEM
T	TANK
TBD	TO BE DETERMINED
TC	TOP CHORD
TDH	TOTAL DYNAMIC HEAD
TEMP	TEMPERATURE
THD	THREAD
THK	THICK
TI	TEMPERATURE INDICATOR
TOD	TOP OF DUCT
TOF	TOP OF FOOTING
TOS	TOP OF STEEL
TRV	THERMO/TEMP RELIEF VALVE
TSP	TOTAL STATIC PRESSURE
TYP	TYPICAL
UG	UNDERGROUND
UH	UNIT HEATER
UON	UNLESS OTHERWISE NOTED
UR	URINAL
V	VENT
V	VOLT(AGE)
VA	VALVE
VAC	VACUUM
VAC	VOLTS ALTERNATING CURRENT
VAV	VARIABLE AIR VOLUME
VCD	VOLUME CONTROL DAMPER (MANUAL)
VCP	VITRIFIED CLAY PIPE
VD	VOLUME DAMPER
VEL	VELOCITY
VENT	VENTILATOR
VERT	VERTICAL
VEST	VESTIBULE
VFD	VARIABLE FREQUENCY DRIVE
VISC	VISCOSITY
VOL	VOLUME
VTR	VENT THRU ROOF
W	WASTE
W	WIDTH (WIDE)
W/	WITH
W/O	WITHOUT
WB	WET BULB
WC	WATER CLOSET
WCO	WALL CLEAN OUT
WF	WASH FOUNTAIN
WFS	WATER FLOW SWITCH
WG	WATER GAUGE
WH	WALL HYDRANT
WH	WATER HEATER
WHA	WATER HAMMER ARRESTOR
WL	WATER LEVEL
WM	WATER METER
WOG	WATER OIL OR GAS
WOM	WOMEN'S
WSP	WORKING STEAM PRESSURE
WT	WEIGHT
WW	WELL WATER
XP	EXPLOSION PROOF
YD	YARD

HVAC/DUCTWORK SYMBOLS

SINGLE LINE	DESCRIPTION	DOUBLE LINE
	EXISTING DUCTWORK	
	EXISTING DUCTWORK TO BE DEMOLISHED UNLESS OTHERWISE NOTED TO BE ABANDONED IN PLACE	
	NEW DUCTWORK	
	FUTURE DUCTWORK	
	SUPPLY DUCT UP	
	SUPPLY DUCT DOWN	
	RETURN DUCT UP	
	RETURN DUCT DOWN	
	ROUND DUCT UP	
	ROUND DUCT DOWN	
	SPIN-IN CONNECTION WITH VOLUME DAMPER	
	BRANCH DUCT TAKEOFF	
	BRANCH DUCT TAKEOFF FROM BOTTOM OF DUCT	
	BRANCH DUCT TAKEOFF FROM TOP OF DUCT	
	DUCTWORK TRANSITION	
	RECTANGULAR TO ROUND DUCTWORK TRANSITION	
DN	DUCT OFFSET WITH DIRECTION NOTED	UP
	DUCT END	
	DUCT BREAK (SQ OR RND)	RND SQ
	RECTANGULAR MITERED ELBOW WITH TURNING VANES	
	ROUND OR RECTANGULA R RADIUS ELBOW	
	BOOST TWO-WAY SPLIT WITH TURNING VANES	
	FLEXIBLE DUCT (MAX LENGTH: 5'-0")	
	VAV BOX	
	VAV BOX w/ REHEAT	
	MANUAL DAMPER	
M	MOTORIZED DAMPER	M
H	DUCT HUMIDIFIER	H
FD	FIRE DAMPER IN HORIZONTAL RUN	FD
FD	FIRE DAMPER IN VERTICAL RUN	FD
SD	SMOKE DAMPER IN HORIZONTAL RUN	SD
SD	SMOKE DAMPER IN VERTICAL RUN	SD
FSD	FIRE/SMOKE DAMPER IN HORIZONTAL RUN	FSD
FSD	FIRE/SMOKE DAMPER IN VERTICAL RUN	FSD
SD	SMOKE DETECTOR (DUCT MOUNTED)	SD

FAN (SEE SCHEDULE FOR TYPE)

UNIT HEATER (SEE SCHEDULE FOR TYPE)

SUPPLY GRILLE/REGISTER/DIFFUSER

SUPPLY GRILLE/REGISTER/DIFFUSER (ROUND)

RETURN OR EXHAUST GRILLE

DIFFUSER BLANK

SIDEWALL SUPPLY OR RETURN GRILLE/REGISTER/DIFFUSER

SUPPLY AIR FLOW ARROW

RETURN/EXHAUST AIR FLOW ARROW

T THERMOSTAT

H HUMIDISTAT

S MANUAL SWITCH

CO2 CO2 SENSOR

SP STATIC PRESSURE SENSOR

PD PRESSURE DIFFERENTIAL SENSOR

TS TEMPERATURE SENSOR

FS FLOW SWITCH

MISCELLANEOUS SYMBOLS

EQUIPMENT IDENTIFIER — P 1 — EQUIPMENT ABBREVIATION / EQUIPMENT NUMBER PER SCHEDULE

EQUIPMENT IDENTIFIER — P-1 — EQUIPMENT ABBREVIATION / EQUIPMENT NUMBER PER SCHEDULE

SECTION MARKER AND ARROW — 1A / M-1 — SECTION NUMBER / SHEET NUMBER WHERE SECTION IS FOUND OR CUT FROM

DETAIL MARKER — 1A / M-1 — DETAIL NUMBER / SHEET NUMBER WHERE DETAIL IS FOUND OR REFERENCED FROM

ENLARGED PLAN MARKER — 1A / M-1 — ENLARGED PLAN NUMBER / SHEET NUMBER WHERE ENLARGED PLAN IS FOUND OR REFERENCED FROM

POINT OF NEW CONNECTION TO EXISTING CONSTRUCTION

MATCH LINE

PNEUMATIC SIGNAL

ELECTRIC SIGNAL/ CONTROL SIGNAL

NOT ALL SYMBOLS ARE APPLICABLE IN THIS PROJECT

CLIENT

Rolesville
Genuine Community • Capital Connection
Est. 1837

ISSUES

ISSUE	ISSUANCE	DATE
A	OWNER REVIEW SET	05/05/2022
0	BUILDING PERMIT & BID SET	07/01/2022

CONSULTANTS

WITHERS RAVENEL
Engineers | Planners | Surveyors

SEAL

NORTH CAROLINA PROFESSIONAL SEAL 054060 ENGINEER DANIEL IGO

Daniel M. Igo

Digitally signed by Daniel M. Igo
DN: C=US, E=dmigo@ibigroup.com, O=IBI Group, CN=Daniel M. Igo
Reason: I am approving this document
Date: 2022.09.21 16:16:48-04'00'

PRIME CONSULTANT

IBI GROUP
421 Fayetteville Street, Suite 1609
Raleigh, NC 27601, USA
tel 919 851 4211
ibigroup.com

PROJECT

ROLESVILLE PUBLIC WORKS
805 E. YOUNG STREET
ROLESVILLE NC

PROJECT NO: 135941	
DRAWN BY: P. PATIL	CHECKED BY: D. IGO
PROJECT MGR: M. HUMIENNY	APPROVED BY: D. IGO
SCALE: 12" = 1'-0"	DATE: 03/03/22

SHEET TITLE
HVAC ABBREVIATIONS AND SYMBOLS

SHEET NUMBER M001

ISSUE 0

2022-09-20 2:35:22 PM

BIM 360://135941-Rolesville_Public_Works FY2020/135941-Rolesville-MECH_v20.rvt

SCALE CHECK 1 in | 1mm

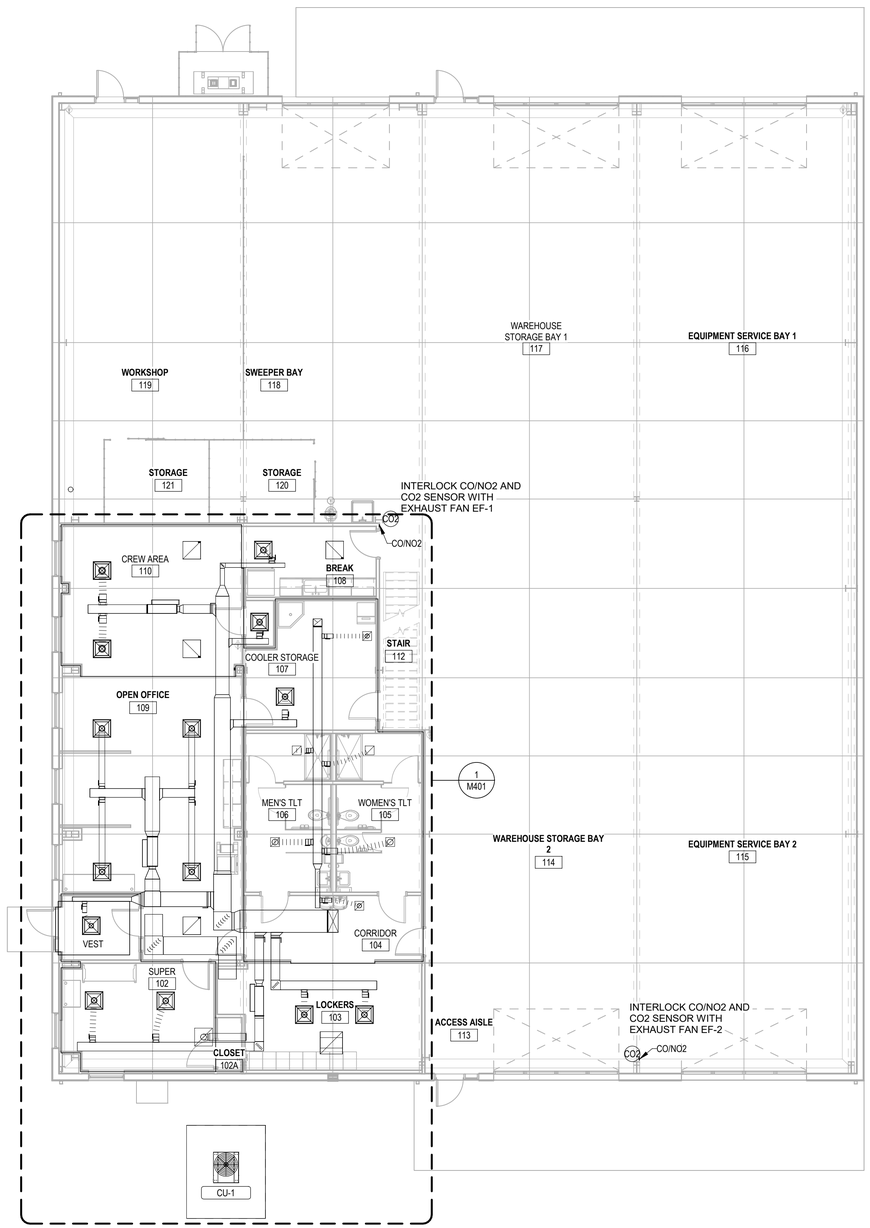

1 M100 FIRST FLOOR HVAC PLAN
Scale: 1/8" = 1'-0"

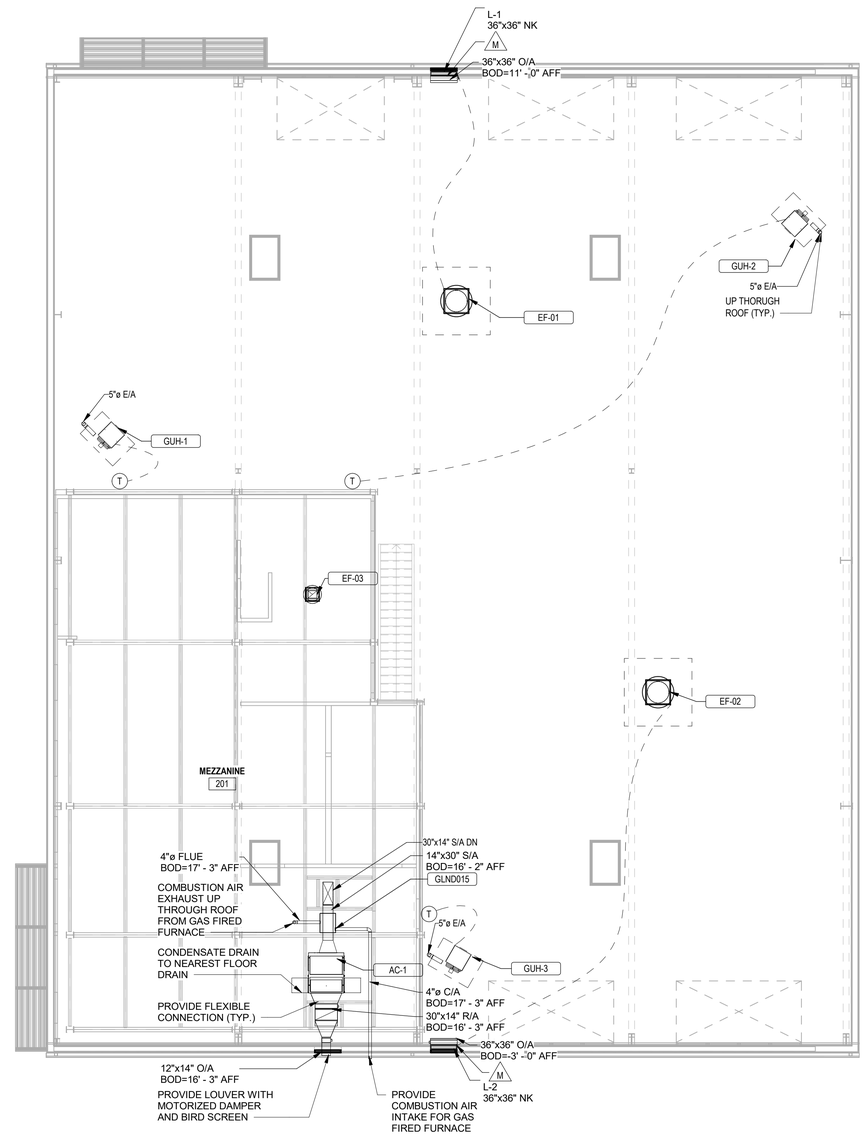

2 M100 MEZZANINE HVAC PLAN
Scale: 1/8" = 1'-0"

2022-09-20 2:35:32 PM

CLIENT

Rolesville
Genuine Community • Capital Connection
Est. 1837

ISSUES

ISSUE	ISSUANCE	DATE
A	OWNER REVIEW SET	05/05/2022
0	BUILDING PERMIT & BID SET	07/01/2022

KEYPLAN

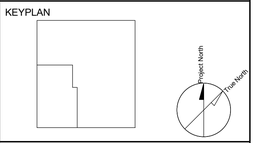

CONSULTANTS

WITHERS RAVENEL

WithersRavenel
Engineers | Planners | Surveyors

SEAL

Daniel M. Igo

Digitally signed by Daniel M. Igo
DN: cn=Daniel M. Igo, o=IBI Group, ou=IBI Group, email=daniel.igo@ibigroup.com, c=US
Date: 2022.09.20 14:35:32 -04'00'
Adobe Acrobat version: 22.001.20169

PRIME CONSULTANT

IBI

IBI GROUP
421 Fayetteville Street, Suite 1609
Raleigh, NC 27601, USA
tel 919 851 4211
ibigroup.com

PROJECT

ROLESVILLE PUBLIC WORKS

805 E. YOUNG STREET
ROLESVILLE NC

PROJECT NO: 135941	
DRAWN BY: **P. PATIL**	CHECKED BY: **D. IGO**
PROJECT MGR: **M. HUMIENNY**	APPROVED BY: **D. IGO**
SCALE: **1/8" = 1'-0"**	DATE: **03/28/19**

SHEET TITLE

FIRST AND MEZZANINE FLOOR HVAC PLAN

SHEET NUMBER	ISSUE
M100	0

BIM 360://135941-Rolesville_Public_Works R2020/135941-Rolesville-MECH_v20.rvt

10mm

SCALE CHECK
1 in

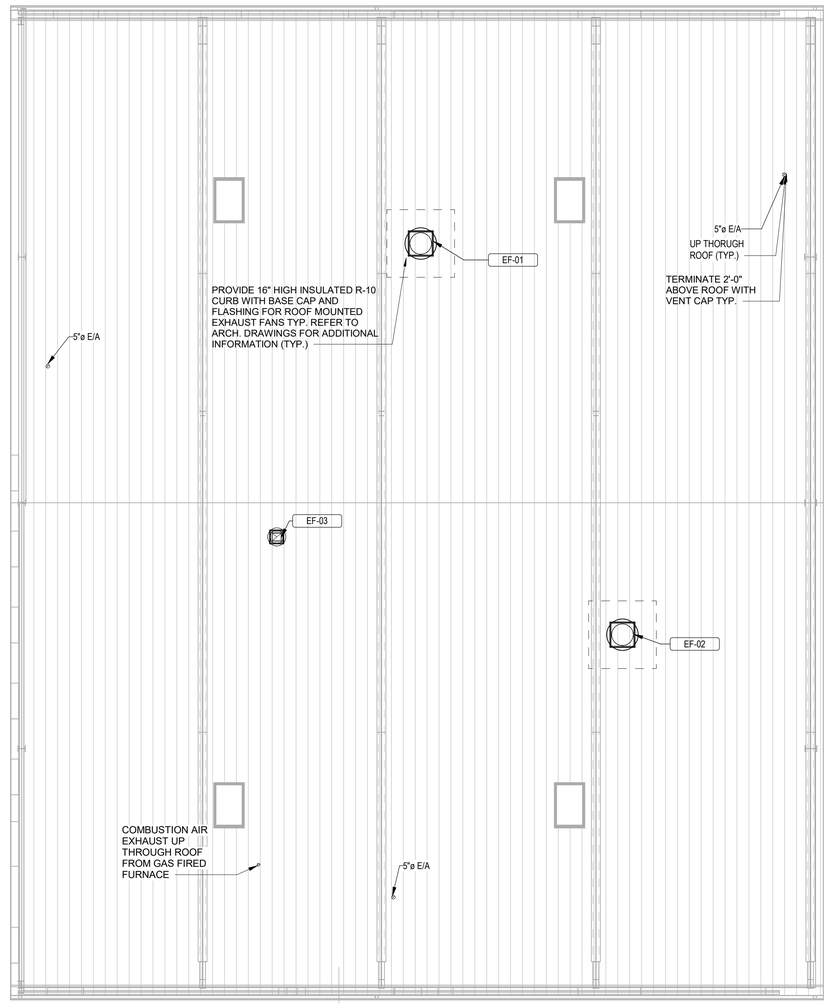

1 M101 ROOF HVAC PLAN
Scale: 1/8" = 1'-0"

CLIENT

Rolesville
Genuine Community • Capital Connection
Est. 1837

ISSUES

ISSUE	ISSUANCE	DATE

KEYPLAN

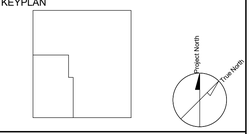

CONSULTANTS

WITHERS RAVENEL

WithersRavenel
Engineers | Planners | Surveyors

SEAL

NORTH CAROLINA PROFESSIONAL SEAL 054060 ENGINEER DANIEL IGO

Daniel M. Igo

Digitally signed by Daniel M. Igo
DN: C=US, E=dan.igo@ibigroup.com, O=IBI Group, CN=Daniel M. Igo
Reason: I am approving this document
Date: 2022.09.21 09:08:25-04'00'

PRIME CONSULTANT

IBI

IBI GROUP
421 Fayetteville Street, Suite 1609
Raleigh, NC 27601, USA
tel 919 851 4211
ibigroup.com

PROJECT

ROLESVILLE PUBLIC WORKS

805 E. YOUNG STREET
ROLESVILLE NC

PROJECT NO: 135941	
DRAWN BY: **P. PATIL**	CHECKED BY: **D. IGO**
PROJECT MGR: **M. HUMIENNY**	APPROVED BY: **D. IGO**
SCALE: **1/8" = 1'-0"**	DATE: **06/30/22**

SHEET TITLE

ROOF PLAN - HVAC

SHEET NUMBER	ISSUE
M101	

BIM 360://135941-Rolesville_Public_Works R2020/135941-Rolesville-MECH_v20.rvt

SCALE CHECK 1 in | 10mm

2022-09-20 2:35:40 PM

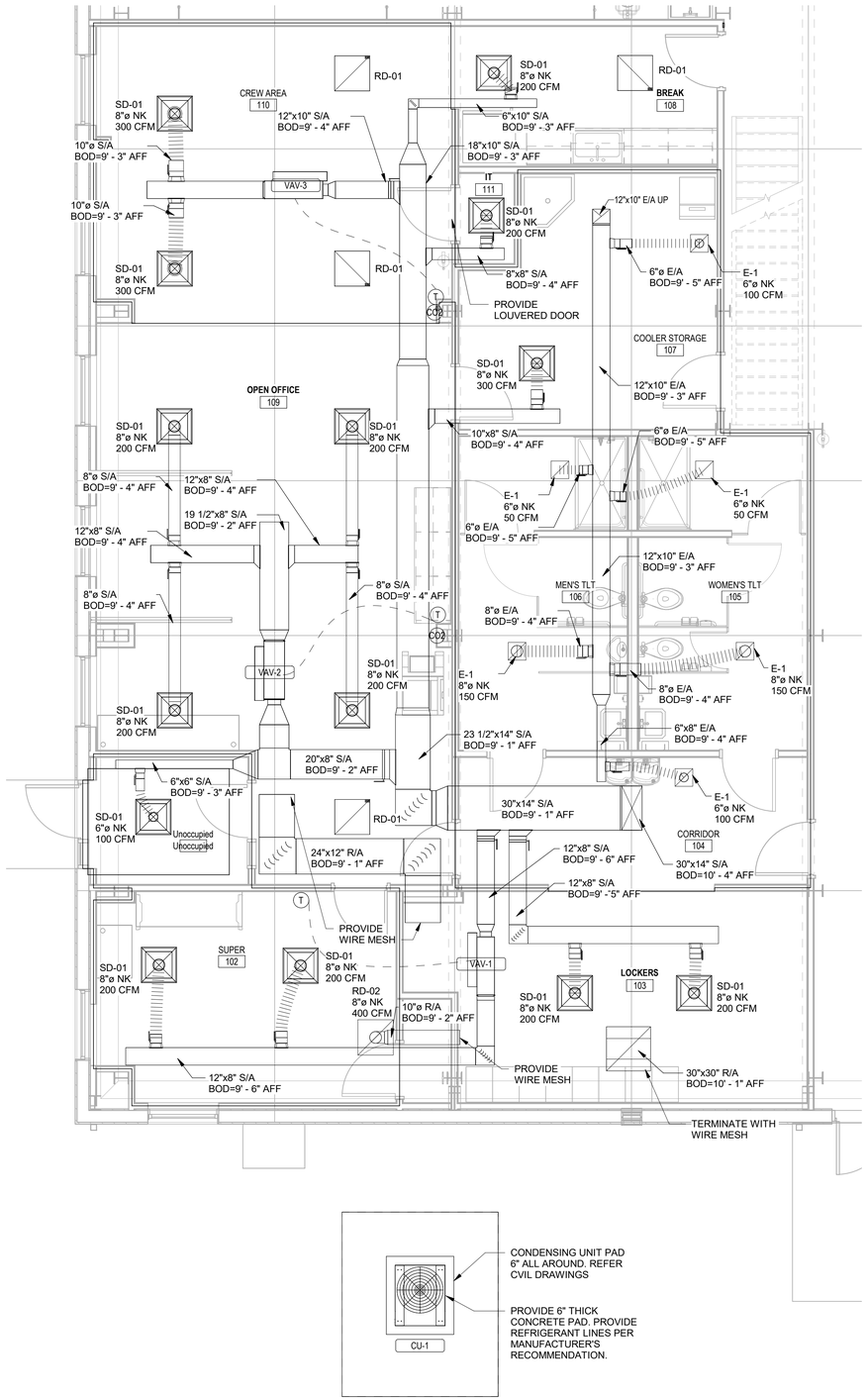

1 / M401 ENLARGED OFFICE AREA - HVAC PLAN

Scale: 1/4" = 1'-0"

2022-09-20 2:35:50 PM

CLIENT

Rolesville
Genuine Community • Capital Connection
Est. 1837

ISSUES

ISSUE	ISSUANCE	DATE
A	OWNER REVIEW SET	05/05/2022
0	BUILDING PERMIT & BID SET	07/01/2022

KEYPLAN

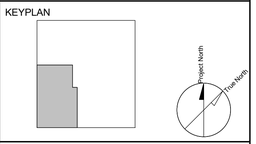

CONSULTANTS

WITHERS RAVENEL

WithersRavenel
Engineers | Planners | Surveyors

SEAL

NORTH CAROLINA PROFESSIONAL SEAL 054060 ENGINEER DANIEL IGO

Daniel M. Igo

Digitally signed by Daniel M. Igo
DN: C=US, E=dan.igo@ibigroup.com, O=IBI Group, CN=Daniel M. Igo
Reason: I am approving this document
Date: 2022.09.23 16:35:31 -04'00'

PRIME CONSULTANT

IBI

IBI GROUP
421 Fayetteville Street, Suite 1609
Raleigh, NC 27601, USA
tel 919 851 4211
ibigroup.com

PROJECT

ROLESVILLE PUBLIC WORKS

805 E. YOUNG STREET
ROLESVILLE NC

PROJECT NO: 135941	
DRAWN BY: **P. PATIL**	CHECKED BY: **D. IGO**
PROJECT MGR: **M. HUMIENNY**	APPROVED BY: **D. IGO**
SCALE: **1/4" = 1'-0"**	DATE: **04/25/22**

SHEET TITLE

ENLARGED PLANS - HVAC

SHEET NUMBER	ISSUE
M401	0

BIM 360/135941-Rolesville_Public_Works R2020/135941-Rolesville-MECH_v20.rvt

SCALE CHECK 1 in 20mm

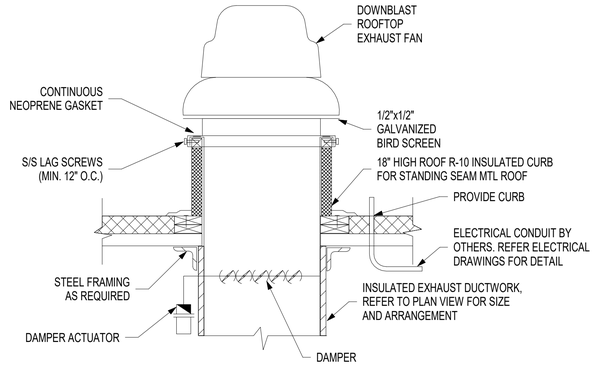

6 ROOF MOUNTED DOWNBLAST EXHAUST FAN DETAIL
Scale: NTS

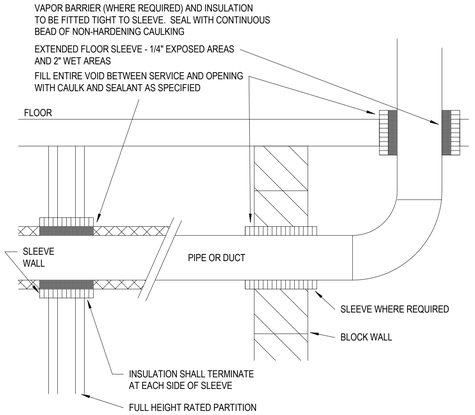

3 DUCT OR PIPE WALL AND FLOOR PENETRATION DETAIL
Scale: NTS

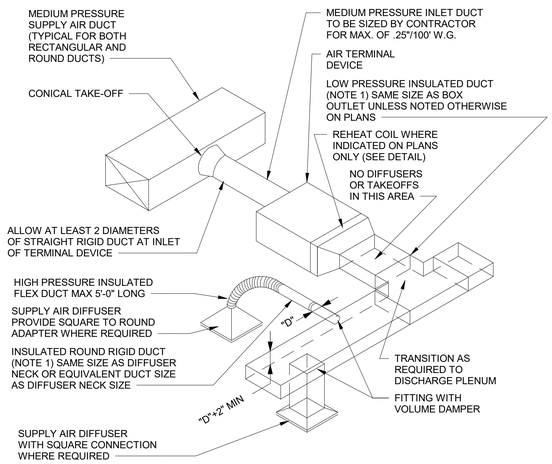

NOTES:

1. ALL DUCTWORK DOWNSTREAM OF THE AIR TERMINAL DEVICE SHALL BE LINED EXCEPT ROUND RUND-OUTS USE THERMAL WRAP IN CONCEALED LOCATIONS ONLY.
2. FOR INLET DUCT SIZE CONNECTIONS TO AIR TERMINAL DEVICE, REFER TO SCHEDULES.
3. FLEXIBLE DUCT AND CONNECTORS SHALL BE INSTALLED IN CONCEALED, ACCESSIBLE AREAS ONLY.

8 AIR TERMINAL DEVICE WITH REHEAT COIL DETAIL
Scale: NTS

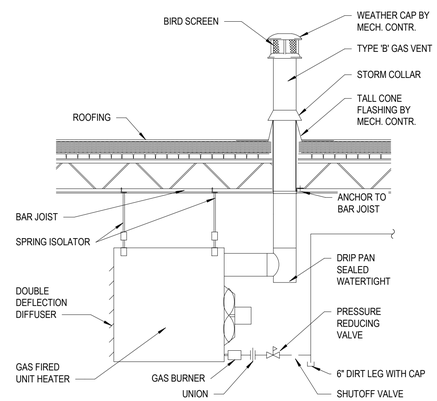

5 GAS FIRED UNIT HEATER DETAIL
Scale: NTS

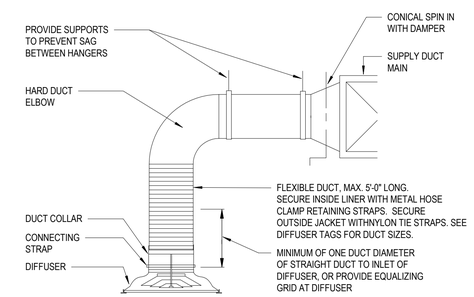

2 DIFFUSER FLEXIBLE DUCT CONNECTION
Scale: NTS

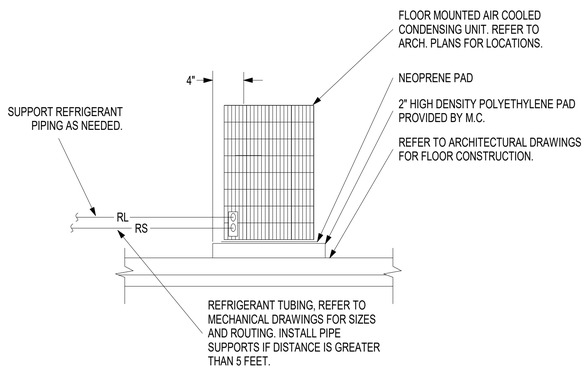

7 FLOOR MOUNTED CONDENSING UNIT DETAIL
Scale: NTS

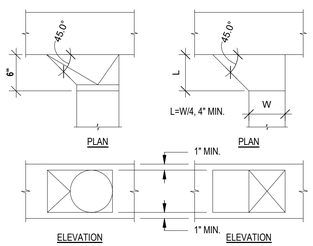

4 DUCT TAKE-OFF DETAIL
Scale: NTS

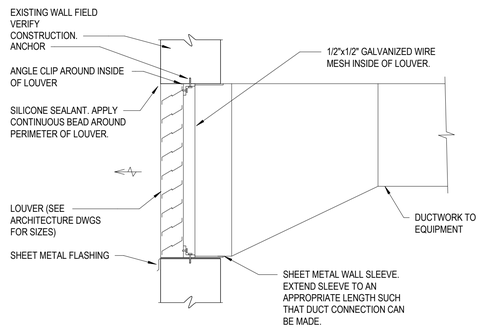

1 LOUVER ASSEMBLY DETAIL
Scale: NTS

CLIENT

Rolesville
Genuine Community • Capital Connection
Est. 1837

ISSUES

ISSUE	ISSUANCE	DATE
A	OWNER REVIEW SET	05/05/2022
0	BUILDING PERMIT & BID SET	07/01/2022

CONSULTANTS

WITHERS RAVENEL

WithersRavenel
Engineers | Planners | Surveyors

SEAL

NORTH CAROLINA PROFESSIONAL SEAL 054060 ENGINEER DANIEL IGO

Daniel M. Igo

Digitally signed by Daniel M. Igo
DN: C=US, E=dan.igo@ibigroup.com, O=IBI Group, CN=Daniel M. Igo
Reason: I am approving this document
Date: 2022-09-21 16:15:08-04'00'

PRIME CONSULTANT

IBI GROUP
421 Fayetteville Street, Suite 1609
Raleigh, NC 27601, USA
tel 919 851 4211
ibigroup.com

PROJECT

ROLESVILLE PUBLIC WORKS

805 E. YOUNG STREET
ROLESVILLE NC

PROJECT NO: 135941	
DRAWN BY: **P. PATIL**	CHECKED BY: **D. IGO**
PROJECT MGR: **M. HUMIENNY**	APPROVED BY: **D. IGO**
SCALE: **As indicated**	DATE: **05/10/22**

SHEET TITLE

HVAC DETAILS

SHEET NUMBER **M501**

ISSUE **0**

BIM 360://135941-Rolesville_Public_Works R2020/135941-Rolesville-MECH_v20.rvt

SCALE CHECK 1 in 10mm

2022-09-20 2:35:58 PM

DUCTED SPLIT AIR CONDITIONING UNIT SCHEDULE

MARK	AREA/SYSTEM SERVED	CFM	OUTDOOR AIR (CFM)	NET TOTAL COOLING CAPACITY (MBh)	COOLING CONDITIONS		BASIS OF DESIGN GAS FURNACE MODEL NO.	HEATING TYPE	HEATING CAPACITY		ELECTRICAL						CONDENSING UNIT (REMOTE OUTSIDE ON CONCRETE PAD) ELECTRICAL DATA						CFM/SQ/FT.	SQ.FT./TON	SIZE (L X W X H)	WEIGHT (LBS)	MFR OR APPROVED EQUAL	DESIGN BASIS MODEL NO.	REMARKS
					EAT DB (DEG. F)	LAT DB (DEG. F)			HEATING INPUT (MBh)	HEATING OUTPUT (MBh)	FLA (AMPS)	MCA (AMPS)	MOP (AMPS)	VOLTAGE	PHASE	HZ	FLA (AMPS)	MCA (AMPS)	MOP (AMPS)	VOLTAGE	PHASE	HZ							
AC-1	OFFICE AREA	3000	800	90.52	80.00	58.16	GLND015	GAS	150	120	5.3 A	7.0 A	15.0 A	208 V	3	60 Hz	25.6 A	32.0 A	40.0 A	208 V	3	60 Hz	1.5	267	58.6" X 28.5" X 51"	323 LBS INDOOR UNIT	TRANE	TWE09043BAA	OUTDOOR UNIT CU-1

SPLIT AC UNIT NOTES

1 DISCONNECT SWITCH BY ELECTRICAL CONTRACTOR.
2 PROVIDE PROGRAMMABLE LITTLE GIANT BASIS OF DESIGN MODEL VCMA 20 SERIES CONDENSATE PUMP FOR THE UNIT.
3 PROVIDE MOTORIZED DAMPER.
4 MECHANICAL CONTRACTOR TO PROVIDE PROGRAMMABLE T'STAT AND WIRE.

CONDENSING UNIT SCHEDULE

MARK	MANUFACTURE	MODEL NO.	TONS	REFRIGERANT	PH	VOLTS	MCA	SERVES	SIZE (L X W X H)	WEIGHT (LBS)	REMARKS
CU-1	TRANE	TTA09043DAB	7.5	R-410A	1	208	32	AC-1	43.54" X 43" X 36.5"	315	

CONDENSING UNIT NOTES

1 DISCONNECT SWITCH BY ELECTRICAL CONTRACTOR.
2 PROVIDE 6" THICK CONCRETE PAD.

AC UNIT AIR BALANCING SCHEDULE

MARK	LOCATION	AREA/SYSTEM SERVED	TOTAL SUPPLY	EXHAUST AIRFLOW	POSITIVE PRESSURIZATION	OUTSIDE AIR INTAKE	RETURN AIRFLOW
AC-1	MEZZANINE FLOOR	OFFICE AREA	3000 CFM	600 CFM	200 CFM	800 CFM	2200 CFM

VARIABLE AIR VOLUME BOX SCHEDULE

MARK	ROOM SERVED	LOCATION	SYSTEM SERVED	TYPE	INLET SIZE	MAX CFM	MIN CFM	HEATING COIL			TOTAL STATIC PRESS DROP (IN WC)	DESIGN BASIS MFR	DESIGN BASIS MODEL #	ELECTRICAL				REMARKS
								AIR TEMP °F		W				VOLTS	PHASE	MCA (AMPS)	MOP (AMPS)	
								ENT	LVG									
VAV-1	SUPER (102)	ABOVE CEILING	AC-1	SINGLE DUCT VAV	8"	400 CFM	190 CFM	55.0 °F	96.6 °F	2500 W	0.25 in-wg	TITUS	DESV8	208 V	3	8.7 A	15.0 A	
VAV-2	OPEN OFFICE (109)	ABOVE CEILING	AC-1	SINGLE DUCT VAV	9"	800 CFM	500 CFM	55.0 °F	96.1 °F	6500 W	0.25 in-wg	Titus HVAC	DESV9	208 V	3	22.6 A	25.0 A	
VAV-3	CREW AREA (110)	ABOVE CEILING	AC-1	SINGLE DUCT VAV	8"	600 CFM	500 CFM	55.0 °F	96.1 °F	6500 W	0.25 in-wg	TITUS	DESV8	208 V	3	22.6 A	25.0 A	

EXHAUST FAN SCHEDULE

MARK	AREA/SYSTEM SERVED	LOCATION	TYPE	CFM @ 70^0	TOTAL ESP (IN WC)	RPM	BHP	DRIVE	HP (MIN)	MOTOR RPM	MOTOR (V/HZ/PH)	MOTOR ENCL	MOTOR CONTROL	DESIGN BASIS MFR/MODEL	ROOF OPENINGS (INCH)	OPERATING WEIGHT (LBS)	NOTES
EF-01	WAREHOUSE	ROOF	CENTRIFUGAL UPBLAST	3180	0.55	667	0.49	DIRECT	1	810	208/60/3	EXP	VFD	GREENHECK - CUE-240HP-VG	26.5 X 26.5	200	1,2,3,4,5,6
EF-02	WAREHOUSE	ROOF	CENTRIFUGAL UPBLAST	3180	0.55	667	0.49	DIRECT	1	810	208/60/3	EXP	VFD	GREENHECK - CUE-240HP-VG	26.5 X 26.5	200	1,2,3,4,5,6
EF-03	TOILET ROOM	ROOF	CENTRIFUGAL DOWNBLAST	600	0.51	1048	0.12	BELT	0.25	1725	115/60/1	ODP	CS	GREENHECK - GB-098-4	14.5 X 14.5	113	1,2,3,4,5,7

FAN NOTES

1. UNIT MANUFACTURER TO PROVIDE STARTER / VFDs & DISCONNECT SWITCH AND INSTALLED BY MANUFACTURER AND MUST BE COMPLIANT WITH SPEC'S
2. PROVIDE INSULATED ROOF CURB FOR ALL ROOF EXHAUST FANS 16" HEIGHT.
3. SOUND POWER LESS 80 DBA (OUTDOOR, ON ROOF, 1 METER FROM FAN)
4. PROVIDE GRAVITY BACKDRAFT DAMPER, DAMPER GUARD & WEATHER HOOD.
5. PROVIDE BIRD AND INSECT SCREEN
6 INTERLOCK WITH LOUVER, MOTORIZED DAMPER, CO/NO2 AND CO2 DETECTOR.
7 CONTINUOUS OPERATION.

WORKSHOP AND SERVICE BAYS VENTILATION

SR. NO.	AREA DESCRIPTION	AREA SQ. FT.	OCCUPANCY CATEGORY	OCCUPANT DENSITY #/1000 SQ.FT.	CALCULATED # OF PEOPLE	PEOPLE OUTDOOR AIRFLOW RATE IN BREATHING ZONE, Rp CFM/PERSON	CALCULATED OUTDOOR AIRFLOW IN BREATHING ZONE TOTAL CFM	AREA OUTDOOR AIRFLOW RATE IN BREATHING ZONE, Ra CFM/SQ.FT.	CALCULATED AREA OUTDOOR AIRFLOW IN BREATHING ZONE TOTAL CFM	MINIMUM REQUIRED OUTDOOR AIR CFM	NO. OF WC/URINALS/ SHOWER HEAD	EXHAUST AIRFLOW RATE CFM/SQ.FT.	MINIMUM REQUIRED EXHAUST CFM
1	ACCESS AILE (113), WAREHOUSE STORAGE BAY 2 (114), EQUIPMENT SERVICE BAY (115), ENGINE SERVICE BAY (116), WAREHOUSE STORAGE BAY (117), SWEEPER BAY (118), WORKSHOP (119), STORAGE (120) AND STORAGE (121)	7166	STORAGE REPAIR GARAGES, ENCLOSED PARKING GARAGES	-	-	-	-	-	-	-	-	0.75	5374.5

GAS UNIT HEATER SCHEDULE

MARK	LOCATION	TYPE	CFM @ 70 °F	MOUNTING HEIGHT (FT)	THROW (FT)	AIR TEMP °F		MBH	ELECTRICAL DATA			DESIGN BASIS MFR	DESIGN BASIS MODEL NO.	OPERATING WEIGHT (LBS)	REFERENCE DWG NO.	REMARKS
						ENT	LVG		VOLTS	PHASE	TOTAL AMPS					
GUH-1	WAREHOUSE	PROP.	2550	15	51	60.0 °F	112.0 °F	200000 Btu/h	115 V	1	5.2 A	Modine	PDP200AE01	253	M100	1,2,3,4,5,6
GUH-2	WAREHOUSE	PROP.	2550	15	51	60.0 °F	112.0 °F	200000 Btu/h	115 V	1	5.2 A	Modine	PDP200AE01	253	M100	1,2,3,4,5,6
GUH-3	WAREHOUSE	PROP.	2550	15	51	60.0 °F	112.0 °F	200000 Btu/h	115 V	1	5.2 A	Modine	PDP200AE01	253	M100	1,2,3,4,5,6

UNIT HEATER (GAS FIRED) NOTES

1 UNIT MANUFACTURER TO PROVIDE DISCONNECT SWITCH. TO BE INSTALLED BY ELECTRICIAN AND MUST BE COMPLIANT WITH SPEC'S
2 PROVIDE SUSPENSION ROD SUPPORT WITH VIBRATION ISOLATORS.
3 PROVIDE VERTICAL VENT KIT.
4 PROVIDE SUPPLY AIR DEFLECTOR HOOD.
5 PROVIDE WALL MOUNTED THERMOSTAT.
6 PROVIDE WITH SUMMER/WINTER SWITCH.

CO/NO2 AND CO2 DETECTOR SCHEDULE (BY OWNER)

BASIS OF DESIGN MODEL	BASIS OF DESIGN MANUFACTURE	ITEM ID	VOLTAGE	DESCRIPTION	QUANTITY	SERVES	REMARK
CX-12	MACURCO	70-2900-0135-2	120V	GRAY HOUSING-CARBON MONOXIDE CO/NITROGEN DIOXIDE NO2 FIXED GAS DETECTOR & CONTROLLER	2	SERVICE BAY EXHAUST FANS	PLUG-IN TYPE DETECTORS. PROVIDED BY OWNER.
CD-12H	MACURCO	70-2900-0190-1	120V	WHITE HOUSING-CARBON DIOXIDE CO2 FIXED GAS DETECTOR & CONTROLLER, AUTO CALIBRATION ONLY	2	SERVICE BAY EXHAUST FANS	PLUG-IN TYPE DETECTORS. PROVIDED BY OWNER.

LOUVER SCHEDULE

MARK	AREA/SYSTEM SERVED	LOCATION	CFM	INTAKE VELOCITY THRU FREE AREA (FPM)	LENGTH (IN)	WIDTH (IN)	DESIGN BASIS MANUFACTURER	DESIGN BASIS MODEL NO.	FREE AREA (SQ.FT.)	PRESSURE DROP	REMARKS
L-1	INTAKE LOUVER FOR WAREHOUSE	EXTERIOR WALL	3180 CFM	599 FPM	36	36	GREENHECK	EDD-106	5.3	0.25 in-wg	PROVIDE MOTORIZED DAMPER AND MERV 8 FILTER
L-2	INTAKE LOUVER FOR WAREHOUSE	EXTERIOR WALL	3180 CFM	599 FPM	36	36	GREENHECK	EDD-106	5.3	0.25 in-wg	PROVIDE MOTORIZED DAMPER AND MERV 8 FILTER

DIFFUSER-REGISTERS-GRILLES SCHEDULE

MARK	TYPE	LOCATION	CFM	AIR DP (IN WC)	NOMINAL NECK SIZE (IN)	NOMINAL FACE SIZE	CEILING TYPE	DESIGN BASIS MFR	DESIGN BASIS MODEL NO.	REMARKS
E-1	PERFORATED	RESTROOM	SEE DWGS	0.10 in-wg	SEE DWGS	24" X 24"	REFER TO ARCH. DRAWINGS	TITUS	PAR	FLUSH FACE
RD-01	PERFORATED	OFFICES / CREW AREA	SEE DWGS	0.10 in-wg	22" X 22"	24" X 24"	REFER TO ARCH. DRAWINGS	TITUS	PXP	FLUSH FACE - PROVIDE ACOUSTICAL ELBOW
RD-02	RETURN GRILLE	SUPER ROOM	SEE DWGS	0.10 in-wg	SEE DWGS	SEE DWGS	REFER TO ARCH. DRAWINGS	TITUS	300RL	
SD-01	SUPPLY DIFFUSER	OFFICES/CONFERENCE ROOMS	SEE DWGS	0.10 in-wg	SEE DWGS	24" X 24"	REFER TO ARCH. DRAWINGS	TITUS	OMNI	

OFFICE AREA VENTILATED SPACE

SR. NO.	DESCRIPTION	AREA SQ. FT.	OCCUPANCY CATEGORY	OCCUPANT DENSITY #/1000SQ. FT.	CALCULATED # OF PEOPLE	PEOPLE OUTDOOR AIRFLOW RATE IN BREATHING ZONE, Rp CFM/PERSON	CALCULATED OUTDOOR AIRFLOW IN BREATHING ZONE TOTAL CFM	AREA OUTDOOR AIRFLOW RATE IN BREATHING ZONE, Ra CFM/SQ.FT.	CALCULATED AREA OUTDOOR AIRFLOW IN BREATHING ZONE TOTAL CFM	MINIMUM REQUIRED OUTDOOR AIR CFM	NO. OF WC/URINALS/SHOWER HEAD	EXHAUST AIRFLOW RATE CFM/SQ.FT.	MINIMUM REQUIRED EXHAUST CFM
1	CREW AREA (110)	357	OFFICE SPACE	5	2	5	8.9	0.06	21.42	21.42	-	-	-
2	OPEN OFFCIE (109)	592	OFFICE SPACE	5	3	5	14.8	0.06	35.52	35.52	-	-	-
3	BREAK AREA (108)	134.16	OFFICE SPACE	5	1	5	3.4	0.06	8.05	8.05	-	-	-
4	VESTIBULE	80	MAIN ENTRY LOBBY	10	1	5	4.0	0.06	4.80	4.80	-	-	-
5	SUPER (102)	262.62	OFFICE SPACE	5	1	5	6.6	0.06	15.76	15.76	-	-	-
6	COOLER STORAGE (107)	210.08	RETAIL SPACE	-	-	-	-	0.12	25.21	25.21	-	-	-
7	CORRIDOR (104)	150	PUBLIC SPACE	-	-	-	-	0.06	9.00	9.00	-	-	-
8	LOCKERS (103)	265.18	EDUCATION	-	-	-	-	-	-	-	-	0.25	66
9	MENS TOILET (106)	-	PUBLIC SPACE	-	-	-	-	-	-	-	2	50	100
10	WOMENS TOILET (105)	-	PUBLIC SPACE	-	-	-	-	-	-	-	2	50	100
11	MENS SHOWER	-	PUBLIC SPACE	-	-	-	-	-	-	-	1	20	20
12	WOMENS SHOWER	-	PUBLIC SPACE	-	-	-	-	-	-	-	1	20	20
13	TOTAL	-	-	-	8	-	-	-	-	119.76	-	-	306

CLIENT

Rolesville
Genuine Community • Capital Connection
Est. 1837

ISSUES

ISSUE	ISSUANCE	DATE
A	OWNER REVIEW SET	05/05/2022
0	BUILDING PERMIT & BID SET	07/01/2022

CONSULTANTS

WITHERS RAVENEL

WithersRavenel
Engineers | Planners | Surveyors

SEAL

NORTH CAROLINA PROFESSIONAL SEAL 054060 ENGINEER DANIEL IGO

Daniel M. Igo

Digitally signed by Daniel M. Igo
DN: cn=Daniel M. Igo, o=IBI Group, ou=IBI Group, c=US-Email M. Igo
Reason: I am approving this document
Date: 2021.09.13 09:17:00-04'00'

PRIME CONSULTANT

IBI

IBI GROUP
421 Fayetteville Street, Suite 1609
Raleigh, NC 27601, USA
tel 919 851 4211
ibigroup.com

PROJECT

ROLESVILLE PUBLIC WORKS
805 E. YOUNG STREET
ROLESVILLE NC

PROJECT NO: 135941

DRAWN BY: **P. PATIL**	CHECKED BY: **D. IGO**
PROJECT MGR: **M. HUMIENNY**	APPROVED BY: **D. IGO**
SCALE:	DATE: **03/03/22**

SHEET TITLE

HVAC SCHEDULE

SHEET NUMBER **M601**

ISSUE **0**

BIM 360://135941-Rolesville_Public_Works R2020/135941-Rolesville-MECH_v20.rvt

SCALE CHECK 1 in 10mm

2022-09-21 2:07:52 PM

NAMEPLATES

COLOR - WHITE BASE - BLACK LETTERS (NORMAL POWER)
- RED BASE - WHITE LETTERS (EMERGENCY POWER)

POWER PANEL IDENTIFICATION NAMEPALTE

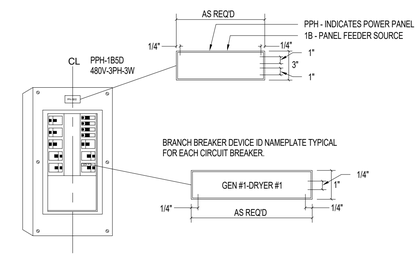

NOTES:
1. LETTERS SHALL BE UPPERCASE, CONDENSED BLOCK TYPE.
2. NAMEPLATES SHALL BE ENGRAVED LAMICOID.
3. FASTEN TO NEMA 1, 9 & 12 ENCLOSURE WITH DOUBLE-FACED URETHANE FOAM TAPE 3M #70-0024-8019-5
4. FASTEN TO NEMA 3R & 4 ENCLOSURE WITH SILICON ADHESIVE .

3 / E301 PANEL IDENTIFICATION DETAIL
NOT TO SCALE

EXTERIOR TYPICAL

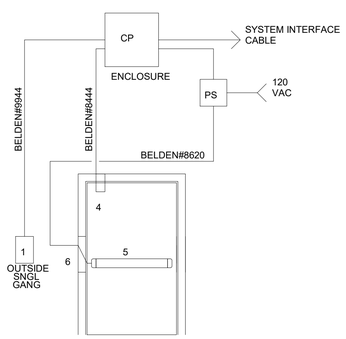

SYMBOL	DESCRIPTION	QTY.
1	PROXIMITY READER (BY OWNER)	1
4	DOOR CONTACT (BY HARDWARE SUPPLIER)	1
5	RIM EXIT (BY HARDWARE SUPPLIER)	1
6	ELECTRIC STRIKE (BY HARDWARE SUPPLIER)	1
CP	CONTROL PANEL/ READER INTERFACE (BY OWNER)	1
PS	POWER SUPPLY (BY HARDWARE SUPPLIER)	1

SYSTEM DESCRIPTION:

- EGRESS IS FREE AT ALL TIMES VIA MECHANICAL EXIT DEVICE.

-INGRESS VIA PRESENTATION OF A VALID PROXIMITY CREDENTIAL WHICH WILL RELEASE THE EXIT DEVICE FOR A SET TIME PERIOD, SO DOOR CAN BE OPENED.

-USERS CAN BE ADDED OR REMOVED AND AUDITED VIA HARDWIRED COMPUTER IN A REMOTE LOCATION.
REFER TO PLANS FOR EXACT NUMBER OF DOORS WITH CONTACTS AT EACH DOOR

ELECTRICAL NOTES:

1. ELECTRICAL CONTRACTOR TO PROVIDE AND INSTALL ALL CONDUIT, BACK-BOXES AND PULL STRINGS.
2. ELECTRICAL CONTRACTOR TO TERMINATE ALL 120VAC CONNECTIONS.
3. ELECTRICAL CONTRACTOR TO COORDINATE INSTALLATION WITH ACCESS CONTROL PROVIDER.

5 / E301 EXTERIOR DOOR DETAIL
NOT TO SCALE

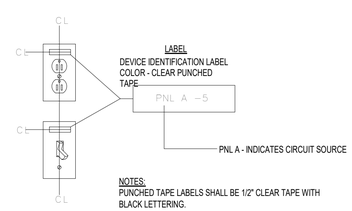

NOTES:
PUNCHED TAPE LABELS SHALL BE 1/2" CLEAR TAPE WITH BLACK LETTERING.

4 / E301 RECEPTICAL-LIGHT SWITCH IDENTIFICATION
NOT TO SCALE

DETAIL NOTES:
1. ALL MOUNTING HEIGHTS SHALL BE MEASURED FROM FINISHED FLOOR FINISHED TO CENTERLINE OF DEVICE EXCEPT AS NOTED.
2. DEVICES SHALL BE INSTALLED ON A COMMON VERTICAL CENTERLINE WHEREVER POSSIBLE.
3. ALL DEVICES SHALL BE INSTALLED AT MOUNTING HEIGHTS AS INDICATED ON THIS DETAIL, UNLESS OTHERWISE NOTED.

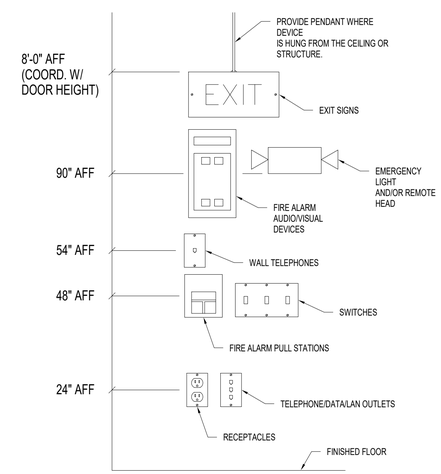

2 / E301 DEVICE MOUNTING HEIGHTS
NOT TO SCALE

ALL CABLING, FACEPLATES AND TERMINATIONS BY OWNER'S VENDOR.

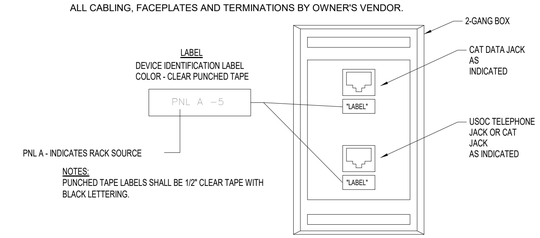

NOTES:
PUNCHED TAPE LABELS SHALL BE 1/2" CLEAR TAPE WITH BLACK LETTERING.

1 / E301 DATA CABLING LABELING DETAIL
NOT TO SCALE

CLIENT

Rolesville
Genuine Community • Capital Connection
Est. 1837

ISSUES

ISSUE	ISSUANCE	DATE
0	BUILDING PERMIT & BID SET	07/01/2022

CONSULTANTS

WITHERS RAVENEL

WithersRavenel
Engineers | Planners | Surveyors

SEAL

NORTH CAROLINA PROFESSIONAL ENGINEER SEAL 034828 KEVIN E. SCHAEFER

PRIME CONSULTANT
IBI GROUP
421 Fayetteville Street, Suite 1609
Raleigh, NC 27601, USA
tel 919 851 4211
ibigroup.com

PROJECT
ROLESVILLE PUBLIC WORKS
805 E. YOUNG STREET
ROLESVILLE NC

PROJECT NO: 135941	
DRAWN BY: RMC	CHECKED BY: KS
PROJECT MGR: MH	APPROVED BY: KS
SCALE: As indicated	DATE: 2022-07-01

SHEET TITLE
ELECTRICAL DETAILS

SHEET NUMBER E301
ISSUE 0

2022-09-21 12:06:59 PM

BIM 360://135941-Rolesville_Public_Works R2020/135941_Rolesville_Elec_v20_Updated_RMC.rvt

10mm
SCALE CHECK
1 in

GENERAL INSTALLATION NOTES

A. PROVIDE (2)#10, (1)#10G WIRING FOR 120V, 2OA BRANCH CIRCUITS EXCEEDING 100FT.

B. COORDINATE DEVICE LOCATIONS WITH ARCHITECTURAL ELEVATIONS PRIOR TO ROUGH-IN. VERIFY DEVICE LOCATIONS ABOVE MILL WORK TO ENSURE CLEARANCE ABOVE THE COUNTER-TOP AND BACK SPLASH. DEVICES THAT INTERFERE WITH NEW CASEWORK, MILLWORK, OR EQUIPMENT SHALL BE RELOCATED AT NO ADDITIONAL COST TO THE CONTRACT.

C. WHERE DEVICES ARE SCHEDULED TO BE INSTALLED IN CASEWORK AND MILLWORK SUPPLIED BY THE GENERAL CONTRACTOR, OBTAIN A SHOP DRAWING FORM THE GENERAL CONTRACTOR PRIOR TO ROUGH-IN. WHERE REQUIRED, CUT OPENINGS IN MILLWORK OR COORDINATE OPENINGS WITH GENERAL CONTRACTOR.

D. REFER TO ARCHITECTURAL PLANS FOR WALL/PARTITION TYPES.

E. COORDINATE CONDUIT RUNS WITH OTHER TRADES PRIOR TO ROUGH-IN. RELOCATE CONDUITS AS NECESSARY TO PERMIT INSTALLATION OF DUCTWORK OR PIPING.

F. INSTALL CIRCUITING CONCEALED INSIDE WALL CAVITY WHEREVER POSSIBLE. PROVIDE SURFACE MOUNTED BACKBOXES AND RACEWAY FOR WIRING DEVICES LOCATED ON EXISTING SOLID WALL CONSTRUCTION. PROVIDE SHALLOW TYPE BACKBOXES FOR SURFACE MOUNTED POWER AND SWITCHING APPLICATIONS. REFER TO ARCHITECTURAL PLANS FOR WALL TYPES.

G. FIRESTOP LOW VOLTAGE SLEEVES AND PENETRATIONS AFTER INSTALLATION OF CABLE.

H. PROVIDE OPEN TOP CABLE HANGERS (4) FEET ON CENTER TO SUPPORT ALL LOW VOLTAGE CABLING ABOVE ACCESSIBLE CEILINGS. PROVIDE SEPARATE CABLE HANGERS FOR HORIZONTAL CABLING AND FIRE ALARM CABLING. INSTALL ALL EXPOSED CABLES IN EMT CONDUIT OR SURFACE RACEWAY IN FINISHED AREAS.

I. ALL LOW VOLTAGE CABLING SHALL BE PLENUM RATED UNLESS NOTED OTHERWISE.

J. THE DRAWINGS SHOW GENERAL LOCATIONS OF DEVICES AND CONTROL EQUIPMENT. THE CONTRACTOR SHALL INSTALL DEVICES AND CONTROLS TO MEET NEC REQUIREMENTS. COORDINATE THE EXACT LOCATION IN THE FIELD.

K. OBTAIN WIRING AND INSTALLATION DIAGRAMS FOR ELECTRICAL CONNECTIONS TO EQUIPMENT PROVIDED BY THE GENERAL, MECHANICAL, OR PLUMBING CONTRACTORS PRIOR TO ROUGH-IN. WORK THAT IS NOT PROPERLY COORDINATED WILL BE RELOCATED AT NO COST TO THE OWNER.

L. COORDINATE COMMUNICATION CABLING AND RACEWAY WORK WITH TELEPHONE, NETWORK HARDWARE, AND MULTI-MEDIA CONTRACTORS PRIOR TO ROUGH-IN.

M. COORDINATE THE LOCATION OF RECEPTACLES, COMMUNICATION OUTLETS, AND OTHER DEVICES WITH FURNITURE AND MILLWORK CONTRACTORS PRIOR TO ROUGH-IN.

N. THE ELECTRICAL CONTRACTOR SHALL FIELD VERIFY EXACT ROUTING OF SURFACE RACEWAY IN FIELD.

O. THE ELECTRICAL CONTRACTOR SHALL COORDINATE ELECTRICAL CONNECTIONS TO ELECTRICAL EQUIPMENT PROVIDED BY OTHERS PRIOR TO ROUGH-IN.

GENERAL POWER DISTRIBUTION NOTES

A. THE DRAWINGS INDICATE PROPOSED PANELBOARD SCHEDULES. MODIFY BREAKER ARRANGEMENT AND PROVIDE BREAKERS SIZED TO THE FINAL REQUIREMENTS OF MECHANICAL AND OTHER EQUIPMENT TO BE INSTALLED. PROVIDE AS BUILT DRAWINGS OF THE PANELBOARD SCHEDULES INDICATING THE SIZE AND LOAD ON ALL BRANCH CIRCUITS AS INSTALLED.

B. THE DRAWINGS SHOW APPROXIMATE LOCATION OF MOTOR CONTROLS. THE EXACT LOCATION OF THE CONTROLS SHALL BE DETERMINED IN THE FIELD AND INSTALLED PER NEC REQUIREMENTS. FOR ROOF EQUIPMENT, INSTALL THE CONTROLS INSIDE THE BUILDING ON THE FLOOR BELOW WHERE POSSIBLE. PROVIDE A NON-FUSED SERVICE DISCONNECT AT ALL ROOFTOP EQUIPMENT IN ADDITION TO THE CONTROLS LOCATED INSIDE THE BUILDING.

C. WHERE RECESSED PANELS ARE BEING PROVIDED, THE CONTRACTOR SHALL CUT AND PATCH THE EXISTING WALL TO ACCEPT NEW COVERING AS REQUIRED TO INSTALL NEW PANEL INTERIOR. STUB 2 ADDITIONAL 3/4" CONDUITS INTO CORRIDOR CEILING FOR FUTURE USE.

D. PROVIDE TYPE WRITTEN PANELBOARD SCHEDULES FOR ALL PANELS USED IN THIS RENOVATION. PANELBOARD SCHEDULES SHALL INDICATE THE SIZE AND LOAD ON ALL BRANCH CIRCUITS AS INSTALLED.

GENERAL LIGHTING NOTES

A. REFER TO REFLECTED CEILING PLANS IN THE ARCHITECTURAL DRAWINGS FOR EXACT LIGHT FIXTURE LOCATIONS.

B. OCCUPANCY SENSOR LOCATIONS SHALL BE DETERMINED IN THE FIELD TO ACHIEVE OPTIMAL PERFORMANCE. PROVIDE SENSITIVITY AND AIMING ADJUSTMENTS.

C. INSTALL LABEL ON FRAME OF EMERGENCY LIGHT FIXTURES DENOTED "EM" ON PLANS TO IDENTIFY IT FOR FUTURE INSPECTION.

GENERAL FIRE ALARM NOTES

A. DO NOT INSTALL SMOKE DETECTORS WITHIN (3) FEET OF SUPPLY DIFFUSERS.

B. FIRE ALARM CIRCUITING SHALL BE INSTALLED IN EMT OR FLEXIBLE METAL CONDUIT.

C. INSTALL FAN SHUTDOWN RELAYS FOR FANS OVER 1000 CFM. THE ELECTRICAL CONTRACTOR SHALL FIELD VERIFY ALL EXISTING HVAC UNITS OVER 1000 CFM.

D. PROVIDE A QUALIFIED HVAC CONTRACTOR TO INSTALL AND SEAL ALL SAMPLING TUBES IN EXISTING DUCT WORK FOR DUCT SMOKE DETECTORS.

GENERAL TELECOMMUNICATIONS NOTES

A. INSTALL ALL BOXES, CONDUITS WITH PULL STRINGS AS CALLED FOR. OWNER TO INSTALL WIRING.

B. LOCATIONS AND MOUNTING HEIGHTS SHALL BE COORDINATED WITH OWNER PRIOR TO ROUGH-IN.

C. REFER TO ARCHITECTURAL PLANS FOR WALL/PARTITION TYPES.

D. TELECOM OUTLETS (NEW WALLS) - PROVIDE RECESSED DOUBLE GANG BACKBOX WITH SINGLE GANG MUD-RING AND 1" CONDUIT UP TO ACCESSIBLE CEILING SPACE FOR TELECOM OUTLETS SHOWN LOCATED IN NEW WALL CONSTRUCTION. PROVIDE PULL STRING AND PLASTIC BUSHINGS ON BOTH ENDS OF CONDUIT.

STANDARD MOUNTING HEIGHTS

UNLESS OTHERWISE NOTED, MOUNT DEVICES AND EQUIPMENT AT HEIGHTS MEASURED FROM FINISHED FLOOR TO DEVICE/EQUIPMENT CENTERLINE AS LISTED BELOW.	
COORDINATE DEVICE LOCATIONS WITH ARCHITECTURAL ELEVATIONS PRIOR TO ROUGH-IN.	
WHERE STRUCTURAL OR OTHER INTERFERENCES PREVENT COMPLIANCE WITH MOUNTING HEIGHTS LISTED BELOW, CONSULT OWNERS REPRESENTATIVE FOR APPROVAL TO CHANGE LOCATION BEFORE INSTALLATION.	
TOGGLE SWITCHES	48"
RECEPTACLE OUTLETS	18"
RECEPTACLE OUTLETS ABOVE HOT WATER OR STEAM BASEBOARD HEATERS	30"
RECEPTACLE OUTLETS, HAZARDOUS LOCATIONS	48"
RECEPTACLE OUTLETS, WEATHER PROOF, ABOVE GRADE	24"
CLOCK, CLOCK OUTLETS	90"
TELECOMMUNICATIONS OUTLETS	18"
TELEPHONE OUTLETS, WALL MOUNTED	48"
TELEVISION OUTLETS	18"
FIRE ALARM PULL STATIONS	48"
FIRE ALARM AUDIO/VISUAL WALL MOUNTED NOTIFICATION DEVICES	80"
BRANCH CIRCUIT PANELBOARDS, TO THE TOP OF THE BACK BOX	72"
DISTRIBUTION PANELBOARDS, TO THE TOP OF THE BACK BOX	72"
TERMINAL CABINETS, CONTROL CABINETS, TO THE TOP OF THE BACK BOX	72"
DISCONNECT SWITCHED, MOTOR STARTERS, ENCLOSED CIRCUIT BREAKERS	48"

NOTE:
ELECTRICAL DEVICES LOCATED WITHIN STORAGE AND SERVICES AREAS ARE CLASS 1 DIV. 2. MOUNT DEVICES AT 24" AFF TO CENTER OF DEVICE.

LIGHTING SEQUENCE OF OPPERATIONS

A. OFFICES:

a. LIGHT LEVEL BASE TO BE SET AT 50fc.

b. LIGHTS RAMP TO 50% UPON OCCUPANCY DETECTION OR 100% FOR MANUAL ON.

c. LIGHTING IS TO BE CONTINUOUSLY DIMMABLE VIA MANUAL CONTROL.

d. LIGHTING CONTROL ZONES TO BE DIMMED INDIVIDUALLY FROM 10%-100% BY USERS.

e. LIGHTS TURN OFF 20 MINUTES AFTER OCCUAPANCY IS LAST DETECTED.

B. TOILET ROOMS:

a. LIGHT LEVEL BASE TO BE SET AT 20fc.

b. KEYED SWITCH MANUALLY TURNS OFF ALL LIGHTING IN THE SPACE.

c. KEYED SWITCH ACTIVATES OCCUPANCY SENSOR TO AUTO-ON/AUTO-OFF.

d. LIGHTS RAMP TO 100% UPON OCCUPANCY DETECTION OR MANUAL ON.

e. LIGHTS SHALL TURN OFF 20 MINUTES AFTER OCCUPANCY IS LAST DETECTED.

LIGHTING FIXTURE SCHEDULE

TYPE	DESCRIPTION	MOUNTING	LAMP	VOLTAGE	WATT	LUMENS	MFR	MODEL # (BASIS OF DESIGN)
EX	LED EXIT SIGN	UNIVERSAL	LED	MVOLT	2 W		MOBERN LIGHTING	EZRXTEU-2-R-W-EM
EX-EM	LED EXIT SIGN	UNIVERSAL	LED	MVOLT	2 W		MOBERN LIGHTING	LEDCXTEU-2-R-W-RC-SDT
L1	4' VAPORTITE LED FIXTURE	SURFACE	LED	MVOLT	23 W	3264 lm	MOBERN LIGHTING	VWN-4-LED-35-DMV-DF-40-SL-CS-WH
L1-EM	4' VAPORTITE LED FIXTURE WITH BATTERY BACK UP	SURFACE	LED	MVOLT	23 W	3264 lm	MOBERN LIGHTING	VWN-4-LED-35-DMV-RF-40-EM-SL-CS-WH
P1	HIGH BAY LED FIXTURE	HOOK	LED	MVOLT	100 W	14700 lm	ASD LIGHTING CORP	ASD-LHB2-100D40W-PRM
P1-EM	HIGH BAY LED FIXTURE WITH BATTERY BACKUP	HOOK	LED	MVOLT	100 W	14700 lm	ASD LIGHTING CORP	ASD-LHB2-100D40W-PRM-BLD-UM40R-RN1
T1	LED ARCHITECTURAL TROFFER	RECESSED GRID	LED	MVOLT	30 W	3864 lm	MOBERN LIGHTING	BFP-22L-30M3300K-DMV-MCT
T1-EM	LED ARCHITECTURAL TROFFER	RECESSED GRID	LED	MVOLT	30 W	3864 lm	MOBERN LIGHTING	BFP-22L-30M3300K-DMV-MCT-EM14
W1	LED WALL LUMINARE	WALL	LED	MVOLT	58 W	6123 lm	RAYON LIGHTING	T630LED-58-UNV-40-TA-BZ-PC1
W2	LED WALL LUMINARE	WALL	LED	MVOLT	84 W	8557 lm	RAYON LIGHTING	T631LED-84-UNV-40-TA-BZ-G2-PC1
W3	LED EXTERIOR EMERGENCY WALL PACK	WALL	LED	MVOLT	10 W	1202 lm	RAYON LIGHTING	T820LED-10-UNV-40-BZ-EM

ELECTRICAL SYMBOL LEGEND

POWER

SYMBOL	DESCRIPTION
	DUPLEX RECEPT.
	RECEPT ON CORD REEL (DUPLEX SHOWN)
	QUADPLEX RECEPT.
	MULTIOUTLET ASSEMBLY (TYPE DENOTED)
	POWER POLE
	SPECIAL RECEPTACLE
	JUNCTION BOX
	PULL BOX
	MOTOR
	SAFETY DISC. SW. (FUSED) (NON-FUSED)
	STARTER
	POWER OR DISTRIBUTION PANEL
	SINGLE RECEPT.
	START STOP PUSH BUTTON

LIGHTING

SYMBOL	DESCRIPTION
EM	EMERGENCY BATTERY LIGHT (TYPE DENOTED)
	EXIT SIGN
	SINGLE POLE SW.
D	DIMMING LIGHT SWITCH
OC	ABOVE COUNTER LIGHT SWITCH
3	3-WAY LIGHT SWITCH
3D	3-WAY DIMMING LIGHT SWITCH
OS	OCCUPANCY SENSOR
DS	DAYLIGHT HARVESTING SENSOR
RC	ROOM CONTROLLER
	1x4 RECESSED LIGHT FIXTURE
	1x4 SURFACE LIGHT FIXTURE
	2x4 RECESSED LIGHT FIXTURE
	2x4 SURFACE LIGHT FIXTURE
	SURFACE LIGHT FIXTURE
	COMBO EXIT EMERGENCY LIGHT FIXTURE
	DOWNLIGHT FIXTURE
	SURFACE LIGHT FIXTURE
	2 X 2 RECESSED LIGHT FIXTURE

LINE TYPES

SYMBOL	DESCRIPTION
	UNDERGROUND ELECTRICAL
	BRANCH CIRCUIT HOME RUN

COMMUNICATION

SYMBOL	DESCRIPTION
	INFORMATION OUTLET
	TELEPHONE OUTLET
	TELEVISION OUTLET
S	SPEAKER (WALL OR CEILING MT.)
	CLOCK (TYPE DENOTED)
	MICROPHONE OUTLET
	DATA RACK OR PA SYSTEM HEAD END

FIRE ALARM

SYMBOL	DESCRIPTION
	FIRE ALARM STROBE
	HEAT DETECTOR
	SMOKE DETECTOR
	FIRE ALARM CONTROL RELAY
CO	CARBON MONOXIDE DETECTOR
	MAGNETIC DOOR HOLD OPEN
	FIRE ALARM AUDIO/VISUAL DEVICE
	FIRE ALARM SPEAKER/STROBE DEVICE
	FIRE ALARM BELL
F	F.A. PULLSTATION
	DUCT SMOKE DETECTOR
FSD	F.A. FAN SHUT DOWN
FA	FIRE ALARM SPEAKER

SECURITY

SYMBOL	DESCRIPTION
	ELECTRIC STRIKE
	DOOR CONTACTS
	CARD READER
	MOTION DETECTOR
	INTERCOM STATION
	CCTV CAMERA WITH PAN/TILT DRIVE

CLIENT

Rolesville
Genuine Community • Capital Connection
Est. 1837

ISSUES

ISSUE	ISSUANCE	DATE
0	BUILDING PERMIT & BID SET	07/01/2022

CONSULTANTS

WITHERS RAVENEL

WithersRavenel
Engineers | Planners | Surveyors

SEAL

NORTH CAROLINA PROFESSIONAL ENGINEER SEAL 034828 KEVIN E. SCHAEFER

PRIME CONSULTANT

IBI GROUP
421 Fayetteville Street, Suite 1609
Raleigh, NC 27601, USA
tel 919 851 4211
ibigroup.com

PROJECT

ROLESVILLE PUBLIC WORKS

805 E. YOUNG STREET
ROLESVILLE NC

PROJECT NO: 135941	
DRAWN BY: RMC	CHECKED BY: KS
PROJECT MGR: MH	APPROVED BY: KS
SCALE: 12" = 1'-0"	DATE: 2022-07-01

SHEET TITLE

LEGEND AND NOTES

SHEET NUMBER	ISSUE
E000	0

BIM 360://135941-Rolesville_Public_Works R2020/135941_Rolesville_Elec_v20_Updated_RMC.rvt

SCALE CHECK 1 in | 10mm

2022-09-21 12:05:39 PM

2018 APPENDIX B
BUILDING CODE SUMMARY FOR ALL COMMERCIAL PROJECTS

ELECTRICAL DESIGN
(PROVIDE ON THE ELECTRICAL SHEETS IF APPLICABLE)

ELECTRICAL SUMMARY

ELECTRICAL SYSTEM AND EQUIPMENT

Method of Compliance: Energy Code: ☐ Prescriptive ☐ Performance
ASHRAE 90.1: ☐ Prescriptive ☐ Performance

Lighting schedule (each fixture type) SEE FIXTURE SCHEDULE E000
lamp type required in fixture
number of lamps in fixture
ballast type used in the fixture
number of ballasts in fixture
total wattage per fixture
total interior wattage specified vs. allowed (whole building or space by space)
total exterior wattage specified vs. allowed

Additional Efficiency Package Options
(When using the 2018 NCECC; not required for ASHRAE 90.1)
☐ C406.2 More Efficient Mechanical Equipment
☒ C406.3 Reduced Lighting Power Density
☐ C406.4 Enhanced Digital Lighting Controls
☐ C406.5 On-Site Renewable Energy
☐ C406.6 Dedicated Outdoor Air System
☐ C406.7 Reduced Energy Use in Service Water Heating

	TOTAL ALLOWABLE	SPECIFIED (W)	REDUCTION
INTERIOR	7740	3826	51%
EXTERIOR	3449	841	76%

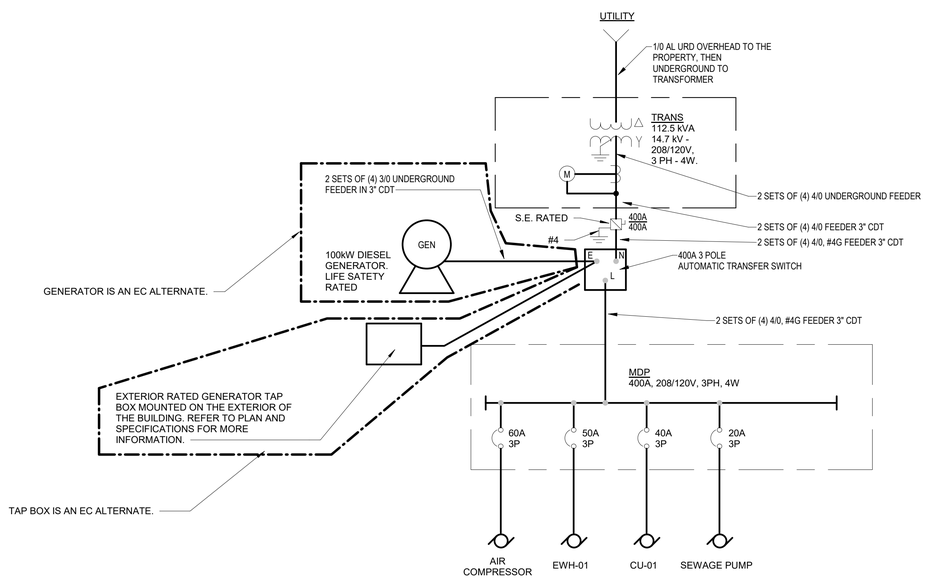

1 / E001 ONE-LINE DIAGRAM
NOT TO SCALE

Branch Panel: MDP

Location: MEZZANINE 201
Supply From:
Mounting: SURFACE
Enclosure: NEMA1

Volts: 208Y/120
Phases: 3
Wires: 4

A.I.C. Rating: 10,000 AMPS SYMMETRICAL
Mains Type: MLO
Mains Rating: 400.0 A

Notes:

CKT	Circuit Description	Trip	Poles	A		B		C		Poles	Trip	Circuit Description	CKT
1	INTERIOR LIGHTING CIRCUIT	20.0 A	1	1292...	841 VA					3	15.0 A	AC-1	2
3	EMERGENCY LIGHTING CIRCUIT	20.0 A	1			65 VA	841 VA						4
5	GUH-1	15.0 A	1					618 VA	841 VA				6
7	GUH-2	15.0 A	1	618 VA	618 VA					1	15.0 A	GUH-3	8
9	EF-03	15.0 A	1			456 VA	4503...			3	50.0 A	EWH-01	10
11	EF-01	20.0 A	1					1560...	4503...				12
13	EF-02	20.0 A	1	1560...	4503...								14
15	WAREHOUSE LIGHTING CIRCUIT	20.0 A	1			1400...	274 VA			1	20.0 A	MEZZANINE LIGHTING CIRCUIT	16
17	EXTERIOR LIGHTING CIRCUIT, UPPER WALL	20.0 A	1					852 VA	180 VA	1	20.0 A	REFRIDGERATOR GFCI BREAKER	18
19	ICE MAKER GFCI BREAKER	20.0 A	1	180 VA	180 VA					1	20.0 A	DRINKING FOUNTAIN GFCI BREAKER	20
21	OFFICE 102 RECEPTACLES	20.0 A	1			720 VA	600 VA			1	20.0 A	COPIER PRINTER RECEPTACLE	22
23	TOILET ROOMS RECEPTACLES	20.0 A	1					720 VA	1080...	1	20.0 A	GENERAL RECEPTACLES	24
25	GENERAL RECEPTACLES	20.0 A	1	1080...	720 VA					1	20.0 A	OPEN OFFICE COMPUTER RECEPTACLES	26
27	BAY 114 115 GENERAL RECEPTACLES	20.0 A	1			900 VA	540 VA			1	20.0 A	SERVICE BAY 115 RECEPTACLES	28
29								3843...	540 VA	1	20.0 A	SERVICE BAY 115 RECEPTACLES	30
31	CU-1	40.0 A	3	3843...	540 VA					1	20.0 A	SERVICE BAY 116 RECEPTACLES	32
33						3843...	540 VA			1	20.0 A	SERVICE BAY 116 RECEPTACLES	34
35	116, 117, 118, 119 GENERAL RECEPTACLES	20.0 A	1					900 VA	540 VA	1	20.0 A	BATTERY CHARGING RECEPTACLES	36
37	BATTERY CHARGING RECEPTACLES	20.0 A	1	540 VA	540 VA					1	20.0 A	WORKSHOP 119 RECEPTACLES	38
39	WORKSHOP 119 RECEPTACLES	20.0 A	1			720 VA	3867...			3	60.0 A	AIR COMPRESSOR POWER	40
41	AIR COMPRESSOR CONDENSATE HEAT TAPE	20.0 A	1					600 VA	3867...				42
43	TRAPEZE QUAD RECEPTACLE	20.0 A	1	180 VA	3867...								44
45	TRAPEZE QUAD RECEPTACLE	20.0 A	1			180 VA	360 VA			1	20.0 A	ACCESS CONTROL POWER CIRCUIT	46
47	EXTERIOR GFCI RECEPTACLES	20.0 A	1					1260...	1200...	1	20.0 A	HOT BOX #1 HEAT TRACE CIRCUIT	48
49	HOT BOX #2 HEAT TRACE CIRCUIT	20.0 A	1	1200...	1176...					1	20.0 A	OVERHEAD DOOR 114 POWER	50
51	OVERHEAD DOOR 115 POWER	20.0 A	1			1176...	1176...			1	20.0 A	OVERHEAD DOOR 116 POWER	52
53	OVERHEAD DOOR 117 POWER	20.0 A	1					1176...	1176...	1	20.0 A	OVERHEAD DOOR 118 POWER	54
55	DATA ROOM POWER	20.0 A	1	180 VA	624 VA					2	20.0 A	DATA RACK POWER	56
57						1801...	624 VA						58
59	SEWAGE EJECTOR PUMP	20.0 A	3					1801...	540 VA	1	20.0 A	BREAK ROOM ABOVE COUNTER...	60
61				1801...	1800...					1	20.0 A	GENERATOR WATER JACKET HEATER	62
63	GENERATOR BATTERY CHARGER	20.0 A	1			600 VA	456 VA			1	20.0 A	CP-01 RECIRCULATION PUMP	64
65	VAV-1	15.0 A	1					1248...	1248...	1	20.0 A	VAV-2	66
67	VAV-3	20.0 A	1	1248...	600 VA					1	20.0 A	OWS PANEL POWER	68
69	VAV-1 HEAT COIL	35.0 A	2			2499...	2499...			2	35.0 A	VAV-2 HEAT COIL	70
71								2499...	2499...				72
73	VAV-3 HEAT COIL	35.0 A	2	2499...	180 VA					1	20.0 A	CO DETECTOR CIRCUIT	74
75						2499...	0 VA			1	20.0 A	SPARE	76
77	SPARE	20.0 A	1					0 VA	0 VA	1	20.0 A	SPARE	78
79	SPARE	20.0 A	1	0 VA	0 VA					1	20.0 A	SPARE	80
81	SPARE	20.0 A	1			0 VA	0 VA			1	20.0 A	SPARE	82
83	SPARE	20.0 A	1					0 VA	0 VA	1	20.0 A	SPARE	84
			Total Load:	31950 VA		32669 VA		34786 VA					
			Total Amps:	266.2 A		273.2 A		290.8 A					

Legend:

Load Classification	Connected Load	Demand Factor	Estimated Demand	Panel Totals	
HVAC	24625 VA	100.00%	24625 VA		
Power	937 VA	100.00%	937 VA	**Total Conn. Load:**	99403 VA
RCPT	14280 VA	85.01%	12140 VA	**Total Est. Demand:**	97415 VA
LITES	0 VA	0.00%	0 VA	**Total Conn.:**	275.9 A
SPEC	600 VA	100.00%	600 VA	**Total Est. Demand:**	270.4 A
HEAT	2400 VA	100.00%	2400 VA		
Lighting	3834 VA	100.00%	3834 VA		
EQUIPMENT	53970 VA	100.00%	53970 VA		

Notes:

CLIENT

Rolesville
Genuine Community • Capital Connection
Est. 1837

ISSUES

ISSUE	ISSUANCE	DATE
0	BUILDING PERMIT & BID SET	07/01/2022

CONSULTANTS
WITHERS RAVENEL
WithersRavenel
Engineers | Planners | Surveyors

SEAL
NORTH CAROLINA PROFESSIONAL ENGINEER SEAL 034828 KEVIN E. SCHAEFER

PRIME CONSULTANT
IBI GROUP
421 Fayetteville Street, Suite 1609
Raleigh, NC 27601, USA
tel 919 851 4211
ibigroup.com

PROJECT
ROLESVILLE PUBLIC WORKS
805 E. YOUNG STREET
ROLESVILLE NC

PROJECT NO: 135941
DRAWN BY: **RMC**
CHECKED BY: **KS**
PROJECT MGR: **MH**
APPROVED BY: **KS**
SCALE: **12" = 1'-0"**
DATE: **2022-07-01**

SHEET TITLE
ONE-LINE DIAGRAM & PANEL SCHEDULE

SHEET NUMBER E001
ISSUE 0

BIM 360://135941-Rolesville_Public_Works R2020/135941_Rolesville_Elec_v20_Updated_RMC.rvt

SCALE CHECK 1 in 1pxm

2022-09-21 12:05:49 PM

REFER TO MECHANICAL AND PLUMBING DRAWINGS FOR ADDITIONAL INFORMATION. REVIEW THE SCHEDULES FOR EACH AND PERFORM THE INSTALLATION OF EQUIPMENT OR DEVICES PROVIDED BY THE OTHER PRIME CONTRACTORS.

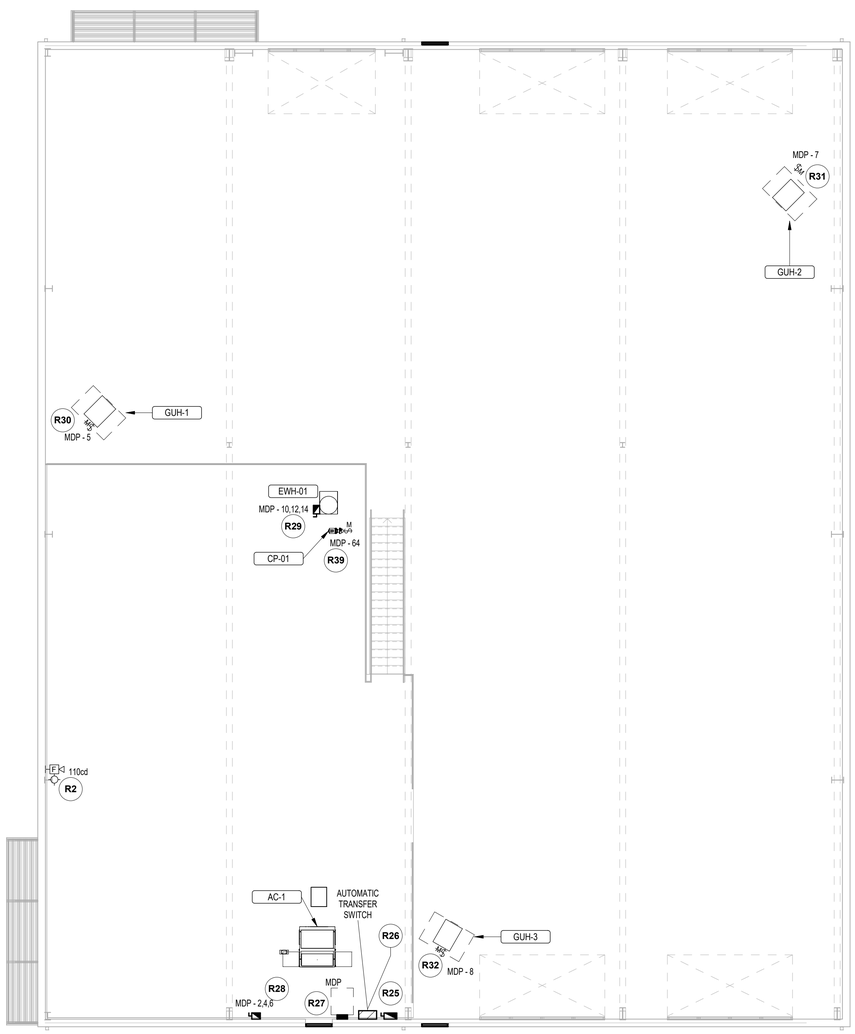

2 / E100 MEZZANINE FLOOR POWER PLAN
1/8" = 1'-0"

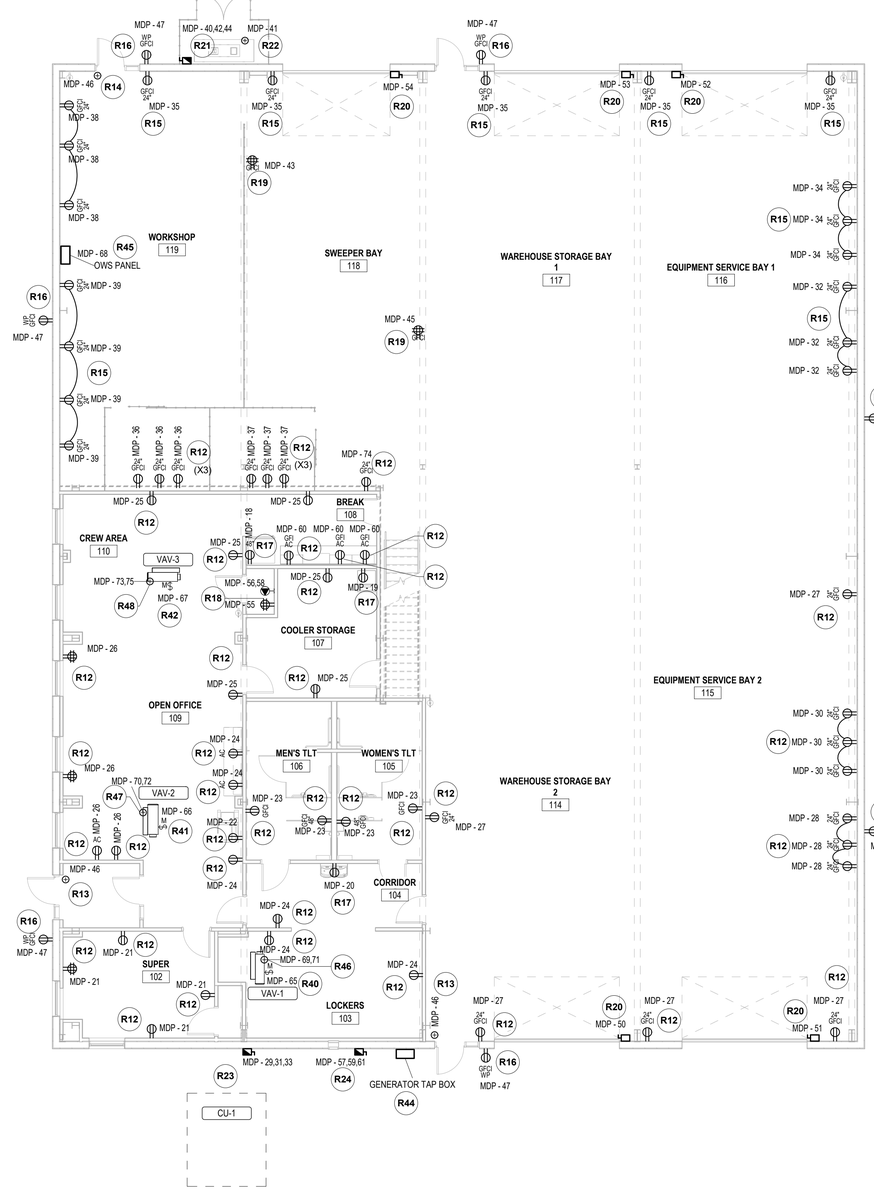

1 / E100 FIRST FLOOR POWER PLAN
1/8" = 1'-0"

RENOVATION KEY NOTES

KEYNOTE	KEYNOTE TEXT
R2	PROVIDE FIRE ALARM HORN/STROBE DEVICES AS INDICATED AND TIE INTO THE NOTIFICATION CIRCUIT. ALL STROBE ARE TO BE 15cd UNLESS NOTED OTHERWISE.
R12	PROVIDE RECEPTACLES IN LOCATION INDICATED. WIRE FROM PANEL INDICATED USING (2)#12,#12G, IN 3/4" CONDUIT.
R13	PROVIDE CIRCUIT FOR DOOR ACCESS CONTROLS IN LOCATION INDICATED. WIRE FROM PANEL INDICATED USING (2)#12,#12G, IN 3/4" CONDUIT.
R14	PROVIDE CIRCUIT FOR DOOR ACCESS CONTROLS IN LOCATION INDICATED. WIRE FROM PANEL INDICATED USING (2)#10,#10G, IN 3/4" CONDUIT.
R15	PROVIDE RECEPTACLES IN LOCATION INDICATED. WIRE FROM PANEL INDICATED USING (2)#10,#10G, IN 3/4" CONDUIT.
R16	PROVIDE EXTERIOR RECEPTACLES IN LOCATION INDICATED WITH HEAVY DUTY COVERS. WIRE FROM PANEL INDICATED USING (2)#10,#10G, IN 3/4" CONDUIT.
R17	PROVIDE RECEPTACLES IN LOCATION INDICATED. WIRE FROM PANEL INDICATED USING (2)#12,#12G, IN 3/4" CONDUIT. PROVIDE GFCI BREAKER IN PANEL TO FEED LOAD.
R18	INSTALL DEDICATED QUAD RECEPTACLE AND 208V RECEPTACLE IN NEW DATA ROOM FOR THE NEW RACK EQUIPMENT TO PLUG INTO. WIRE TO PANEL INDICATED USING (2)#12,#12G IN 3/4" CDT AND (3)#12,#12G, IN 3/4" CDT. COORDINATE FINAL LOCATION WITH OWNER BEFORE ROUGH IN.
R19	PROVIDE QUAD RECEPTACLES IN LOCATION INDICATED ON TRAPEZE FRAMING. WIRE FROM PANEL INDICATED USING (2)#10,#10G, IN 3/4" CONDUIT. REFER TO ARCHITECTURAL PLANS FOR MORE INFROMATION.
R20	PROVIDE 30A SERVICE DISCONNECT SWITCH IN CLOSE PROXIMITY TO THE OVERHEAD DOOR MOTOR. WIRE FROM PANEL INDICATED USING (2)#10,#10G, IN 3/4" CONDUIT. PROVIDE WIRING BETWEEN DISCONNECT SWITCH AND THE MOTOR. FOLLOW MANUFACTURERS INSTALLATION INSTRUCTIONS.
R21	PROVIDE 60A SERVICE DISCONNECT SWITCH IN LOCATION INDICATED FOR THE AIR COMPRESSOR. WIRE FROM PANEL INDICATED USING (3)#6,#10G, IN 1" CONDUIT. PROVIDE WIRING BETWEEN DISCONNECT SWITCH AND THE MOTOR. FOLLOW MANUFACTURERS INSTALLATION INSTRUCTIONS.
R22	PROVIDE CIRCUIT FOR THE AIR COMPRESSOR CONDENSATE LINE HEAT TAPE IN LOCATION INDICATED. HEAT TAPE MODEL BASED ON CHROMALOX CWM 12-1CT WITH RTES END SEALS, AND A SSK SEALING KIT. PROVIDE A COMPLETE WORKING SYSTEM TO MAINTAIN AN ABOVE FREEZEING TEMPERATURE ON THE CONDENSATE DRAIN LINE.. WIRE FROM PANEL INDICATED USING (2)#10,#10G, IN 3/4" CONDUIT.
R23	PROVIDE 60A SERVICE DISCONNECT SWITCH IN LOCATION INDICATED FOR THE CONDENSING UNIT CU-1. WIRE FROM PANEL INDICATED USING (3)#6,#10G, IN 1" CONDUIT. PROVIDE WIRING BETWEEN DISCONNECT SWITCH AND THE MOTOR. FOLLOW MANUFACTURERS INSTALLATION INSTRUCTIONS.
R24	PROVIDE 30A SERVICE DISCONNECT SWITCH IN LOCATION INDICATED FOR THE SEWAGE EJECTOR PUMP. WIRE FROM PANEL INDICATED USING (3)#10,#10G, IN 3/4" CONDUIT. PROVIDE WIRING BETWEEN DISCONNECT SWITCH AND THE PUMP. FOLLOW MANUFACTURERS INSTALLATION INSTRUCTIONS. REFER TO AND PROVIDE DEVICES AND WIRING AS INDICATED ON C3.01 PUMP STATION DETAIL, POWER RISER DIAGRAM. COORDINATE WORK WITH OTHER CONTRACTORS.
R25	PROVIDE SERVICE ENTRANCE DISCONNECT SWITCH IN LOCATION INDICATED. REFER TO ONE-LINE DIAGRAM FOR MORE INFORMATION.
R26	PROVIDE AUTOMATIC TRANSFER SWITCH IN LOCATION INDICATED. REFER TO ONE-LINE DIAGRAM FOR MORE INFORMATION.
R27	PROVIDE ELECTRIC PANEL, MDP IN LOCATION INDICATED. REFER TO ONE-LINE DIAGRAM AND THE PANEL SCHEDULES FOR WIRING AND BREAKER INFORMATION.
R28	PROVIDE 30A SERVICE DISCONNECT SWITCH IN LOCATION INDICATED FOR THE AIR CONDITIONING UNIT AC-1. WIRE FROM PANEL INDICATED USING (3)#12,#12G, IN 3/4" CONDUIT. PROVIDE WIRING BETWEEN DISCONNECT SWITCH AND THE MOTOR. FOLLOW MANUFACTURERS INSTALLATION INSTRUCTIONS.
R29	PROVIDE 60A SERVICE DISCONNECT SWITCH IN LOCATION INDICATED FOR THE WATER HEATER. WIRE FROM PANEL INDICATED USING (3)#6,#10G, IN 1" CONDUIT. PROVIDE WIRING BETWEEN DISCONNECT SWITCH AND THE MOTOR. FOLLOW MANUFACTURERS INSTALLATION INSTRUCTIONS.
R30	PROVIDE POWER CONNECTION TO GUH-1 FROM PANEL INDICATED. WIRE USING (2)#10,#10G, IN 3/4" CDT. DISCONNECT SWITCH IS PROVIDED BY THE MC AND INSTALLED AND WIRED BY THE EC.
R31	PROVIDE POWER CONNECTION TO GUH-2 FROM PANEL INDICATED. WIRE USING (2)#10,#10G, IN 3/4" CDT. DISCONNECT SWITCH IS PROVIDED BY THE MC AND INSTALLED AND WIRED BY THE EC.
R32	PROVIDE POWER CONNECTION TO GUH-3 FROM PANEL INDICATED. WIRE USING (2)#10,#10G, IN 3/4" CDT. DISCONNECT SWITCH IS PROVIDED BY THE MC AND INSTALLED AND WIRED BY THE EC.
R39	PROVIDE POWER CONNECTION AND SERVICE DISCONNECT SWITCH TO CP-01 FROM PANEL INDICATED. WIRE USING (2)#12,#12G, IN 3/4" CDT.
R40	PROVIDE POWER CONNECTION AND SERVICE DISCONNECT SWITCH TO VAV-1 FROM PANEL INDICATED. WIRE USING (2)#10,#10G, IN 3/4" CDT.
R41	PROVIDE POWER CONNECTION AND SERVICE DISCONNECT SWITCH TO VAV-2 FROM PANEL INDICATED. WIRE USING (2)#10,#10G, IN 3/4" CDT.
R42	PROVIDE POWER CONNECTION AND SERVICE DISCONNECT SWITCH TO VAV-3 FROM PANEL INDICATED. WIRE USING (2)#10,#10G, IN 3/4" CDT.
R44	PROVIDE GENERATOR TAP BOX IN LOCATION INDICATED. REFER TO ONE-LINE DIAGRAM AND SPECIFICATIONS FOR MORE INFORMATION.
R45	PROVIDE POWER CONNECTION TO THE OIL WATER SEPERATOR CONTROL PANEL IN LOCATION INDICATED. WIRE USING (2)#12,#12G IN 3/4" CDT.
R46	PROVIDE POWER CONNECTION AND SERVICE DISCONNECT SWITCH TO THE RE-HEAT COIL FOR VAV-1 FROM PANEL INDICATED. WIRE USING (3)#8,#10G, IN 3/4" CDT.
R47	PROVIDE POWER CONNECTION AND SERVICE DISCONNECT SWITCH TO THE RE-HEAT COIL FOR VAV-2 FROM PANEL INDICATED. WIRE USING (3)#8,#10G, IN 3/4" CDT.
R48	PROVIDE POWER CONNECTION AND SERVICE DISCONNECT SWITCH TO THE RE-HEAT COIL FOR VAV-3 FROM PANEL INDICATED. WIRE USING (3)#8,#10G, IN 3/4" CDT.

CLIENT

Rolesville
Genuine Community • Capital Connection
Est. 1837

ISSUES

ISSUE	ISSUANCE	DATE
0	BUILDING PERMIT & BID SET	07/01/2022

KEYPLAN

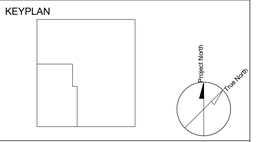

CONSULTANTS

WITHERS RAVENEL

WithersRavenel
Engineers | Planners | Surveyors

SEAL

PRIME CONSULTANT

IBI GROUP
421 Fayetteville Street, Suite 1609
Raleigh, NC 27601, USA
tel 919 851 4211
ibigroup.com

PROJECT

ROLESVILLE PUBLIC WORKS

805 E. YOUNG STREET
ROLESVILLE NC

PROJECT NO: 135941	
DRAWN BY: RMC	CHECKED BY: KS
PROJECT MGR: MH	APPROVED BY: KS
SCALE: 1/8" = 1'-0"	DATE: 2022-07-01

SHEET TITLE

ELECTRICAL POWER PLANS

SHEET NUMBER E100

ISSUE 0

2022-09-21 12:06:03 PM

BIM 360://135941-Rolesville_Public_Works R2020/135941_Rolesville_Elec_v20_Updated_RMC.rvt

10mm

SCALE CHECK 1 in

RENOVATION KEY NOTES

KEYNOTE	KEYNOTE TEXT
R36	PROVIDE LIGHT FIXTURES AND CONTROLS IN LOCATIONS INDICATED. WIRE FROM PANEL INDICATED USING (2)#12,#12G IN 3/4" CDT. REFER TO LIGHT FIXTURE SCHEDULE ON E000 FOR FIXTURE INFORMATION.
R37	PROVIDE EXIT SIGNS IN LOCATIONS INDICATED. WIRE FROM PANEL INDICATED USING (2)#12,#12G IN 3/4" CDT. REFER TO LIGHT FIXTURE SCHEDULE ON E000 FOR FIXTURE INFORMATION.
R38	PROVIDE EXTERIOR LIGHT FIXTURES IN LOCATIONS INDICATED. WIRE FROM PANEL INDICATED USING (2)#10,#10G IN 3/4" CDT. REFER TO LIGHT FIXTURE SCHEDULE ON E000 FOR FIXTURE INFORMATION.

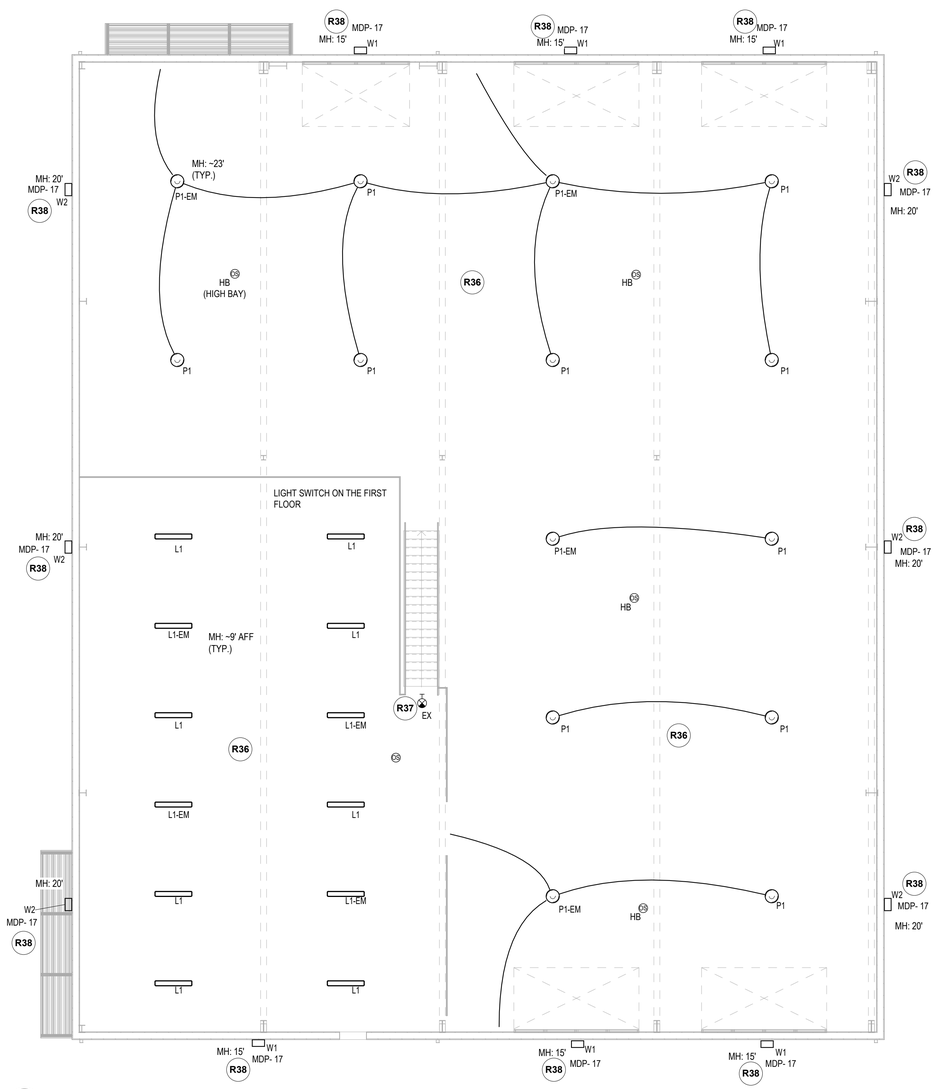

2 E101 MEZZANINE FLOOR LIGHTING PLAN
1/8" = 1'-0"

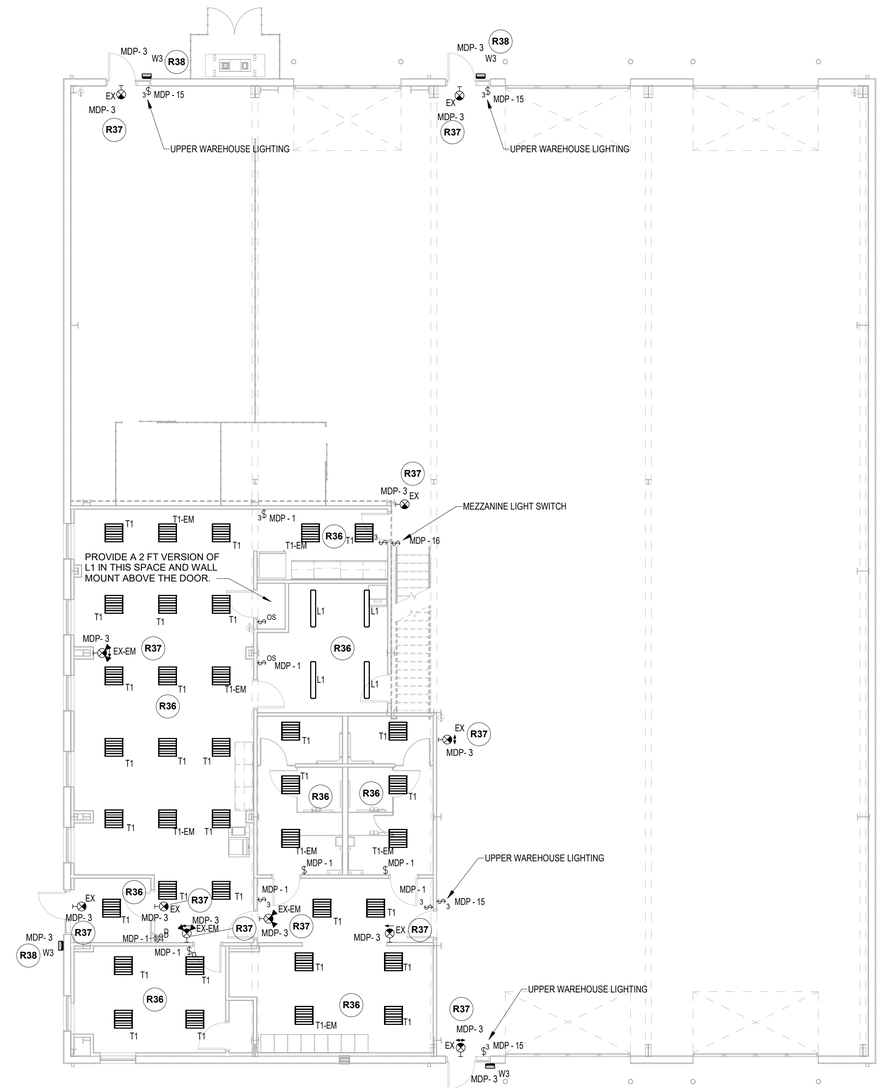

1 E101 FIRST FLOOR LIGHTING PLAN
1/8" = 1'-0"

CLIENT

Rolesville
Genuine Community • Capital Connection
Est. 1837

COPYRIGHT

ISSUES

ISSUE	ISSUANCE	DATE
0	BUILDING PERMIT & BID SET	07/01/2022

KEYPLAN

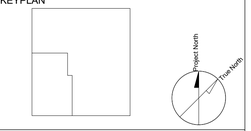

CONSULTANTS

WITHERS RAVENEL

WithersRavenel
Engineers | Planners | Surveyors

SEAL

PRIME CONSULTANT

IBI GROUP
421 Fayetteville Street, Suite 1609
Raleigh, NC 27601, USA
tel 919 851 4211
ibigroup.com

PROJECT

ROLESVILLE PUBLIC WORKS

805 E. YOUNG STREET
ROLESVILLE NC

PROJECT NO: 135941	
DRAWN BY: RMC	CHECKED BY: KS
PROJECT MGR: MH	APPROVED BY: KS
SCALE: 1/8" = 1'-0"	DATE: 2022-07-01

SHEET TITLE

ELECTRICAL LIGHTING PLANS

SHEET NUMBER E101

ISSUE 0

BIM 360://135941-Rolesville_Public_Works R2020/135941_Rolesville_Elec_v20_Updated_RMC.rvt

SCALE CHECK 1 in 10mm

2022-09-21 12:06:16 PM

RENOVATION KEY NOTES

KEYNOTE	KEYNOTE TEXT
R2	PROVIDE FIRE ALARM HORN/STROBE DEVICES AS INDICATED AND TIE INTO THE NOTIFICATION CIRCUIT. ALL STROBE ARE TO BE 15cd UNLESS NOTED OTHERWISE.
R3	PROVIDE CEILING MOUNTED FIRE ALARM STROBE DEVICES AS INDICATED AND TIE INTO THE NOTIFICATION CIRCUIT. ALL STROBE ARE TO BE 15cd UNLESS NOTED OTHERWISE.
R4	PROVIDE PULL STATIONS AS INDICATED AND TIE INTO THE INITIATION CIRCUIT. PULL STATIONS ARE TO BE MOUNTED AT ADA HEIGHTS.
R5	PROVIDE WALL MOUNTED FIRE ALARM STROBES AS INDICATED AND TIE INTO THE NOTIFICATION CIRCUIT. ALL STROBE ARE TO BE 15cd UNLESS NOTED OTHERWISE.
R6	PROVIDE CARBON MONOXIDE DETECTORS AS INDICATED AND TIE INTO THE INITIATION CIRCUIT.
R9	PROVIDE NETWORK DROP IN LOCATIONS INDICATED. NUMBER NEXT TO THE DROP REFERS TO HOW MANY CABLES AND TERMINATIONS ARE AT THAT LOCATION. ALL CABLING AND TERMINATIONS ARE BY THE OWNER'S VENDOR. PROVIDE J-HOOKS ABOVE CEILINGS FOR PATHWAYS.
R10	PROVIDE SINGLE NETWORK DROP FOR CAMERA BY OTHERS IN LOCATIONS INDICATED. ALL CABLING AND TERMINATIONS ARE BY THE OWNER'S VENDOR. PROVIDE J-HOOKS ABOVE CEILINGS FOR PATHWAYS.
R11	ACCESS CONTROL DOOR HARDWARE BY OWNERS VENDER. COORDINATE WORK WITH THE NEW DOORS PROVIDED BY THE G.C.
R33	PROVIDE POWER CONNECTION TO EF-01 FROM PANEL INDICATED. WIRE USING (2)#10,#10G, IN 3/4" CDT. DISCONNECT SWITCH IS PROVIDED BY THE MC.
R34	PROVIDE POWER CONNECTION TO EF-02 FROM PANEL INDICATED. WIRE USING (2)#10,#10G, IN 3/4" CDT. DISCONNECT SWITCH IS PROVIDED BY THE MC.
R35	PROVIDE POWER CONNECTION TO EF-03 FROM PANEL INDICATED. WIRE USING (2)#10,#10G, IN 3/4" CDT. DISCONNECT SWITCH IS PROVIDED BY THE MC.
R43	BID ALTERNATE - LIGHTNING PROTECTION DOWNLEAD CONDUCTORS TO UTILIZE COLUMN LOCATION FOR CONNECTION TO LIGHTNING GROUNDING SYSTEM (TYP).

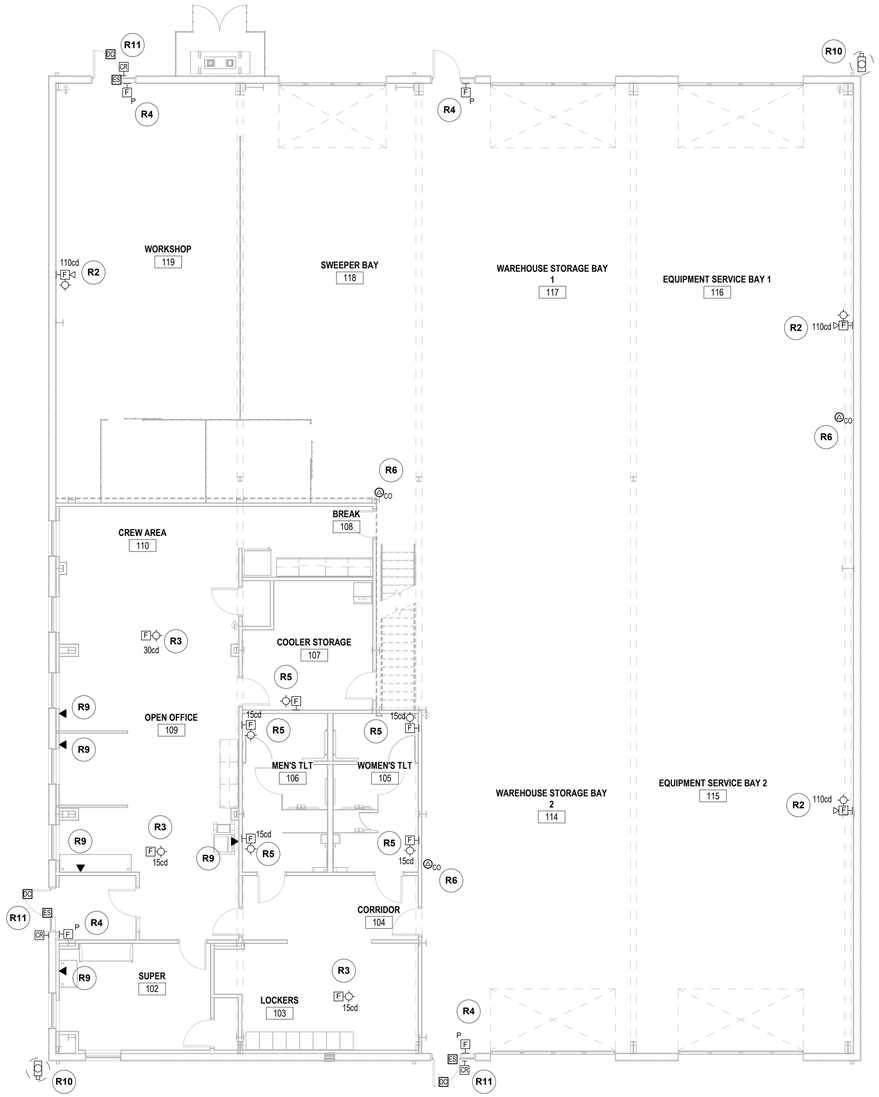

1 / E102 FIRST FLOOR SYSTEMS PLAN
1/8" = 1'-0"

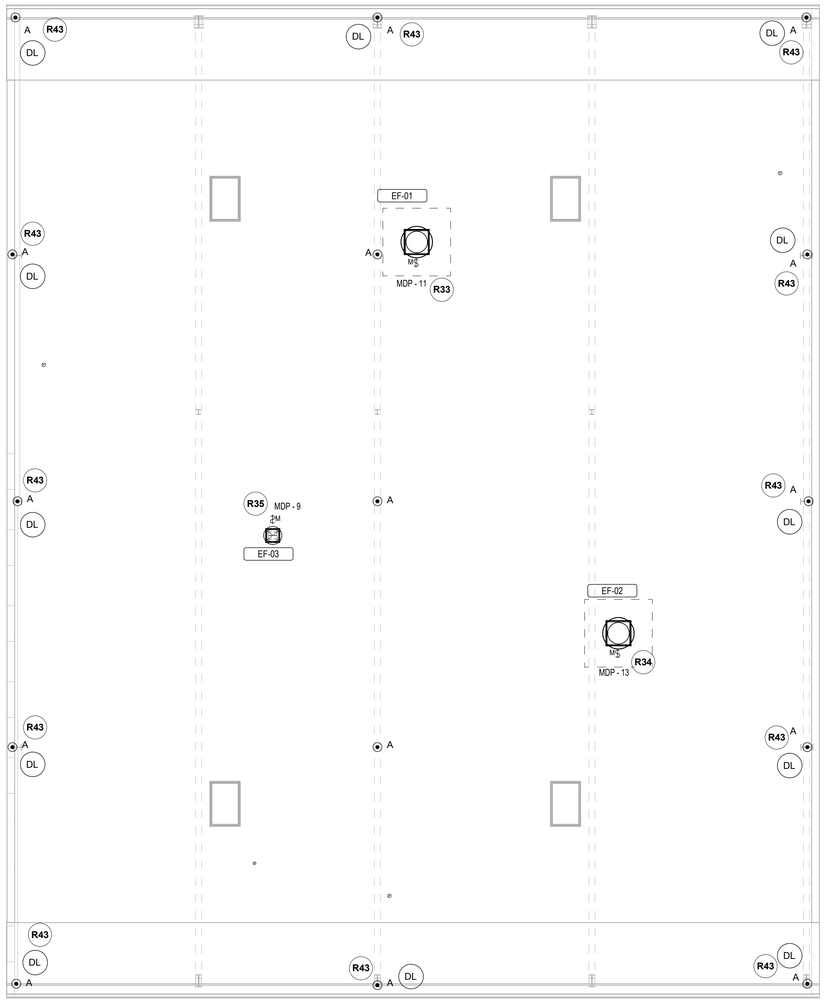

2 / E102 ROOF POWER PLAN
1/8" = 1'-0"

ALL WORK ASSOCIATED WITH THE LIGHTNING PROTECTION IS AN EC ALTERNATE.

TYPE A - 24" ALUMINUM

DL LIGHTNING PROTECTION DOWNLEAD

NOTE:
LIGHTNING PROTECTION DEOWNLEAD CONDUCTORS TO UTILIZE COLUMN LOCATION FOR CONNECTION TO FACILITY GROUNDING SYSTEM (TYP)

CLIENT

Rolesville
Genuine Community • Capital Connection
Est. 1837

ISSUES

ISSUE	ISSUANCE	DATE
0	BUILDING PERMIT & BID SET	07/01/2022

KEYPLAN

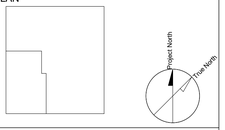

CONSULTANTS

WITHERS RAVENEL

WithersRavenel
Engineers | Planners | Surveyors

SEAL

NORTH CAROLINA PROFESSIONAL ENGINEER SEAL 034828 KEVIN E. SCHAEFER

PRIME CONSULTANT
IBI GROUP
421 Fayetteville Street, Suite 1609
Raleigh, NC 27601, USA
tel 919 851 4211
ibigroup.com

PROJECT
ROLESVILLE PUBLIC WORKS
805 E. YOUNG STREET
ROLESVILLE NC

PROJECT NO: 135941	
DRAWN BY: RMC	CHECKED BY: KS
PROJECT MGR: MH	APPROVED BY: KS
SCALE: As indicated	DATE: 2022-07-01

SHEET TITLE
ROOF AND SYSTEMS PLAN

SHEET NUMBER E102 | ISSUE 0

BIM 360://135941-Rolesville_Public_Works R2020/135941_Rolesville_Elec_v20_Updated_RMC.rvt

SCALE CHECK 10mm 1 in

2022-09-21 12:06:28 PM

RENOVATION KEY NOTES

KEYNOTE	KEYNOTE TEXT
G1	ALL GROUNDING REQUIREMENTS SHALL MEET NEC ARTICLE 250.52(A)(3).
G2	PROVIDE #4/0 COPPER STRANDED WIRE BETWEEN GROUND LOOP OR THE NEAREST BUILDING STEEL COLUMN.
G3	PROVIDE GROUNDING TRIAD (3) 3/4"x10' LONG COPPER GROUND ROD SPACED 10â€" APART, AS INDICATED, DRIVEN 12" BELOW FINISHED GRADE.
G4	#4/0 BARE COPPER STRANDED WIRE BURIED 30 INCHES BELOW FINISHED GRADE. BURIED WIRE SHALL BE NO MORE THAN 5 FEET FROM BUILDING EXTERIOR WALL.
G5	PROVIDE ONE 12"x4"x0.25" COPPER GROUND BAR WITH TWO ROWS OF PRE-PUNCHED HOLES. COORDINATE BAR LOCATION WITH SERVER RACK LAYOUT.
G6	PROVIDE GROUNDING SYSTEM TEST WELL.
G7	PROVIDE PVC SLEEVE WHERE GROUND CONDUCTORS PASSES THROUGH GRADE BEAM.
G8	UNLESS OTHERWISE INDICATED ALL GROUNDING CONNECTIONS TO BE EXOTHERMIC.
G9	ALL GROUNDING EQUIPMENT PIGTAILS TO BE CONNECTED AT COLUMN WEB.
G10	PROVIDE 3/4"X10' LONG GROUND ROD AT EACH DOWN LEAD CONDUCTOR LOCATION AS INDICATED. CONNECT GROUND ROD TO THE GROUND RING AROUND THE BUILDING.

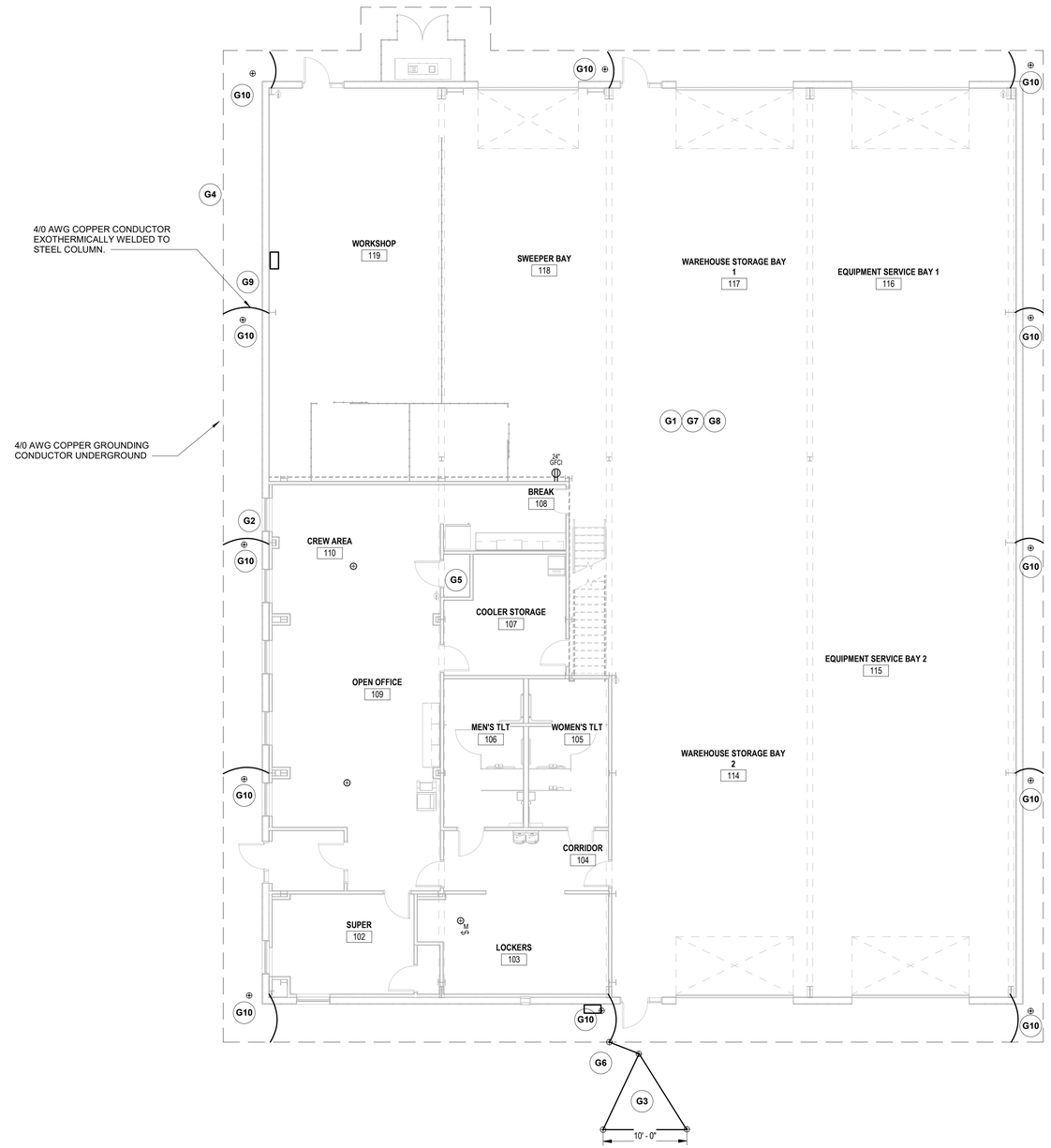

1 / E103 FIRST FLOOR GROUNDING PLAN
1/8" = 1'-0"

CLIENT

Rolesville
Genuine Community • Capital Connection
Est. 1837

ISSUES

ISSUE	ISSUANCE	DATE
0	BUILDING PERMIT & BID SET	07/01/2022

KEYPLAN

CONSULTANTS

WITHERS RAVENEL

WithersRavenel
Engineers | Planners | Surveyors

SEAL

NORTH CAROLINA PROFESSIONAL ENGINEER SEAL 034828 KEVIN E. SCHAEFER

PRIME CONSULTANT

IBI

IBI GROUP
421 Fayetteville Street, Suite 1609
Raleigh, NC 27601, USA
tel 919 851 4211
ibigroup.com

PROJECT

ROLESVILLE PUBLIC WORKS

805 E. YOUNG STREET
ROLESVILLE NC

PROJECT NO: 135941	
DRAWN BY: **RMC**	CHECKED BY: **KS**
PROJECT MGR: **MH**	APPROVED BY: **KS**
SCALE: **1/8" = 1'-0"**	DATE: **2022-07-01**

SHEET TITLE

ELECTRICAL GROUNDING PLAN

SHEET NUMBER	ISSUE
E103	0

BIM 360://135941-Rolesville_Public_Works R2020/135941_Rolesville_Elec_v20_Updated_RMC.rvt

SCALE CHECK 10mm 1 in

2022-09-21 12:06:39 PM

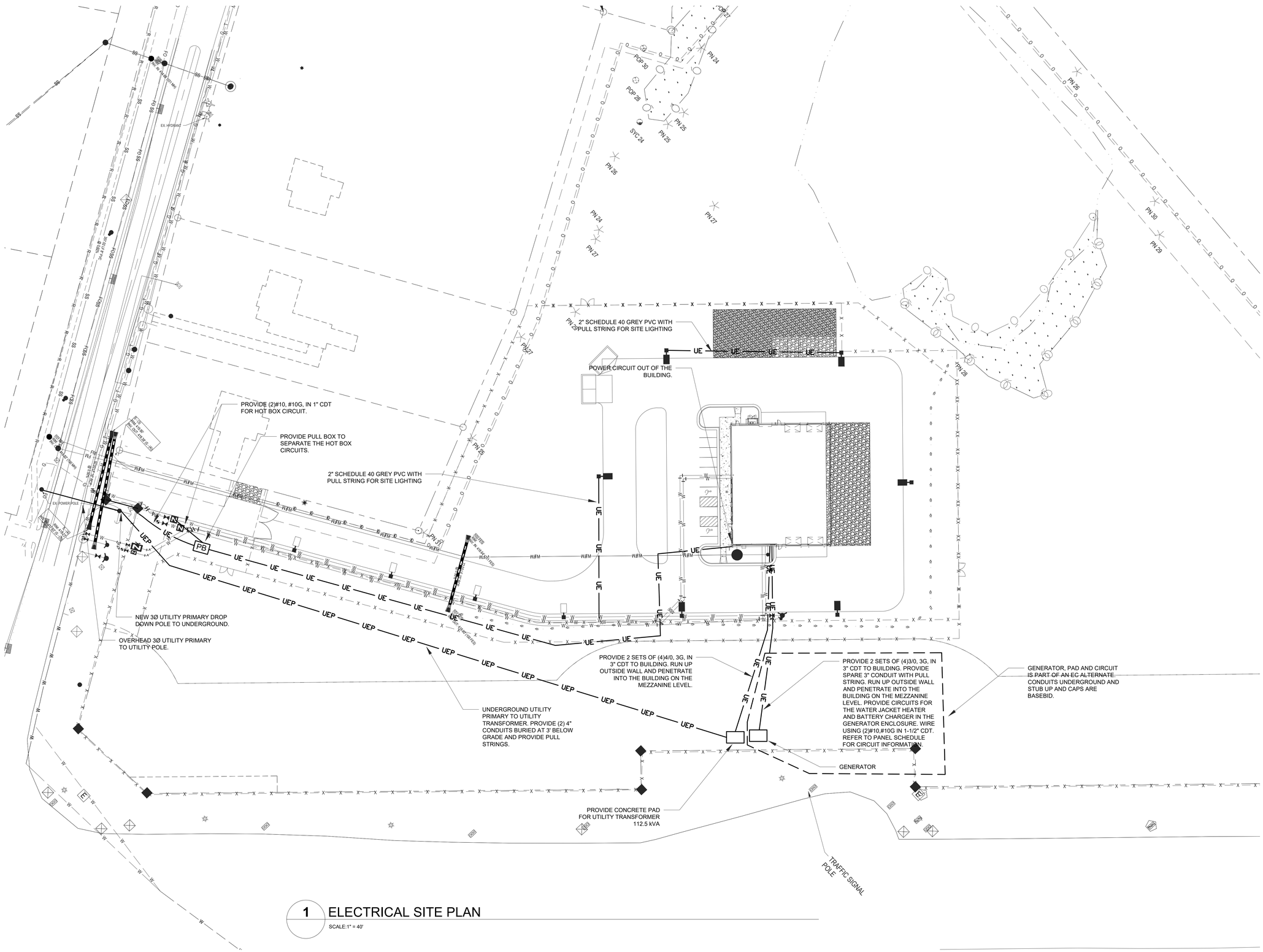

1 ELECTRICAL SITE PLAN

SCALE:1" = 40'

2022-03-25 7:50:08 AM

CLIENT

Rolesville
Genuine Community • Capital Connection
Est. 1837

ISSUES

ISSUE	ISSUANCE	DATE
0	BUILDING PERMIT & BID SET	07/01/2022

CONSULTANTS

WITHERS RAVENEL

WithersRavenel
Engineers | Planners | Surveyors

SEAL

NORTH CAROLINA PROFESSIONAL ENGINEER SEAL 034828 KEVIN E. SCHAEFER

PRIME CONSULTANT

IBI

IBI GROUP
421 Fayetteville Street, Suite 1609
Raleigh, NC 27601, USA
tel 919 851 4211
ibigroup.com

PROJECT

ROLESVILLE PUBLIC WORKS

-- YOUNG STREET
ROLESVILLE NC

PROJECT NO: 135941	
DRAWN BY: **RMC**	CHECKED BY: **KS**
PROJECT MGR: **MH**	APPROVED BY: **KS**
SCALE:	DATE: **03/25/22**

SHEET TITLE

SITE PLAN

SHEET NUMBER	ISSUE
E104	

SCALE CHECK

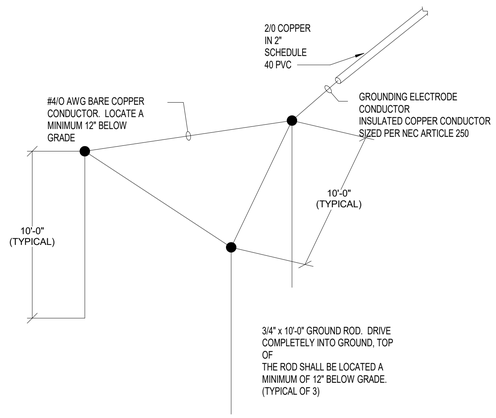

A. SERVICE ENTRANCE GROUNDING SYSTEM SHALL BE INSTALLED IN FULL COMPLIANCE WITH NEC SECTION 250.

B. PROVIDE MOLDED FUSION WELDES FOR ALL BELOW GRADE GROUNDING CONNECTIONS.

C. PROVIDE SOLDER BLOCK IN GROUNDING ELECTRODE CONDUCTOR AT THE POINT OF ENTRANCE INTO THE FACILITY. SEAL CONDUIT 100% WATER TIGHT.

D. EXISTING GROUND SYSTEM TO BE REMOVED INCLUDING N-G BOND AND REPLACE WITH NEW AT ELECTRICAL SERVICE LOCATION.

5 / E300 GROUNDING GRID DETAIL
NOT TO SCALE

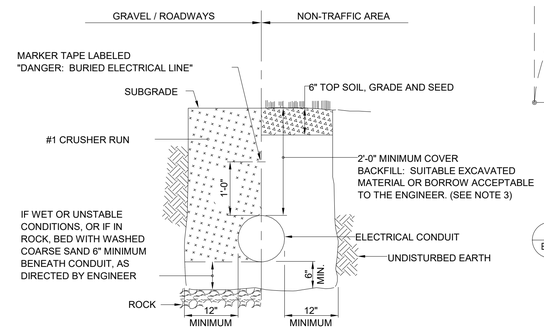

NOTES:

1. ALL MATERIAL PLACED IN GRAVEL/ROADWAY AREAS SHALL BE COMPACTED IN MAXIMUM 6" LIFTS.
2. THIS TRENCH DETAIL SHALL INCLUDE THE REQUIREMENTS COMMON TO MORE THAN ONE SECTION OF DIVISION 2 OF THE SPECIFICATIONS.
3. IN GRAVEL/ROSDWAY AREAS, COVER SHALL BE A MINIMUM OF 3'-0" BELOW FINAL GRADE SHOWN ON SITE PLAN.

TYPICAL TRENCH DETAIL FOR CONDUIT

NOT TO SCALE

4 / E300 TYPICAL TRENCH DETAIL FOR CONDUIT
NOT TO SCALE

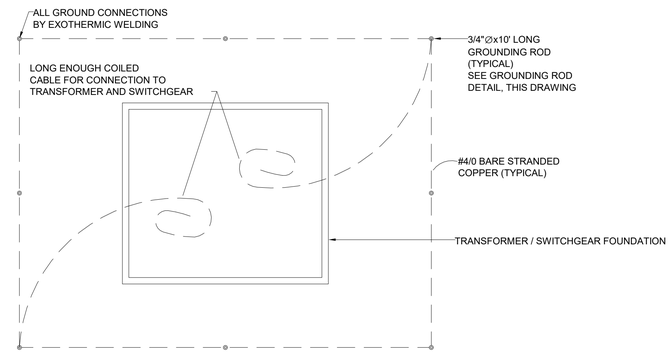

PAD MOUNTED TRANSFORMER GROUNDING PLAN

NOT TO SCALE

2 / E300 PAD MOUNTED TRANSFORMER GROUND PLAN
NOT TO SCALE

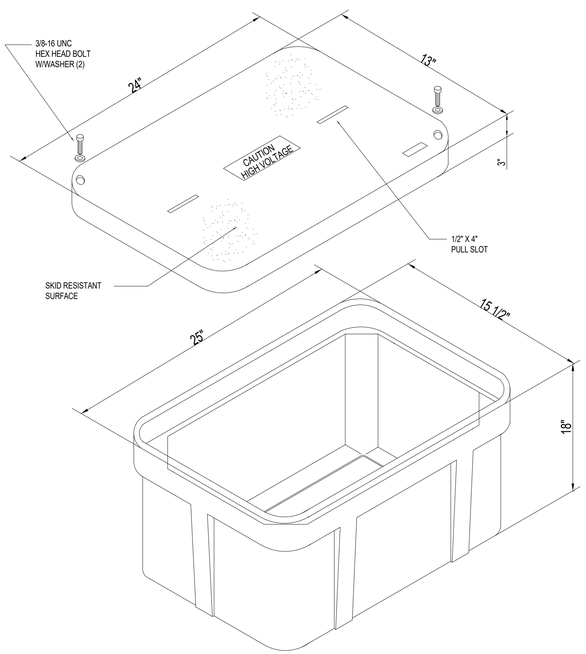

NOTES:

A. UTILITY BOX TO BE MANUFACTURED BY STRONGWELL, QUAZITE CAT. #PG1324BA18 OR APPROVED EQUAL.

B. BOX TO BE CONSTRUCTED OF POLYMER CONCRETE WITH DIMENSIONS AS INDICATED.

C. TOP OF BOX TO BE LABELED "CAUTION HIGH VOLTAGE"

D. COLOR OF BOX TO BE GREEN.

E. INSTALL IN GROUND PER MANUFACTURER RECOMMENDATIONS.

9 / E300 PULL BOX - SMALL
NOT TO SCALE

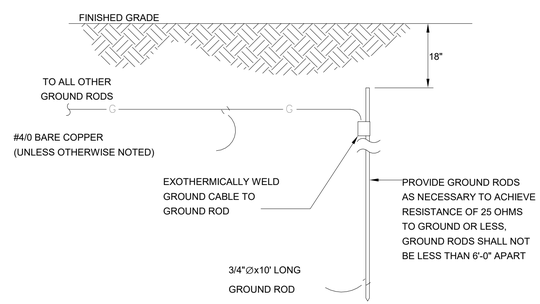

GROUNDING ROD DETAIL

SCALE: 1/2" = 1'-0"

3 / E300 GROUNDING ROD DETAIL
NOT TO SCALE

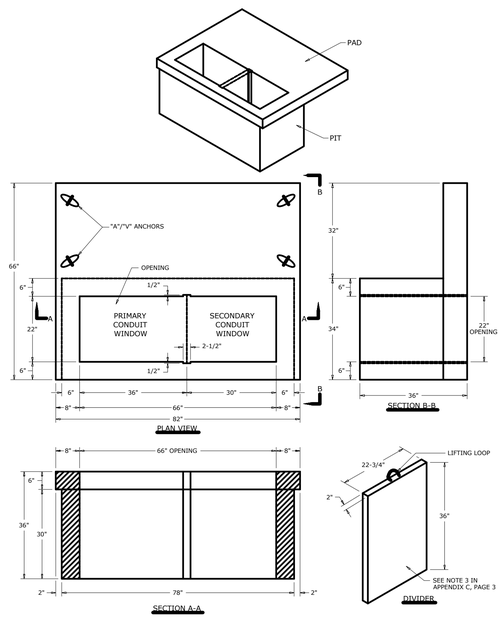

SMALL PIT PAD FOR
THREE-PHASE PAD-MOUNTED TRANSFORMERS

1 / E300 SMALL PIT PAD DETAIL
NOT TO SCALE

CLIENT

Rolesville
Genuine Community • Capital Connection
Est. 1837

ISSUES

ISSUE	ISSUANCE	DATE
0	BUILDING PERMIT & BID SET	07/01/2022

CONSULTANTS

WITHERS RAVENEL

WithersRavenel
Engineers | Planners | Surveyors

SEAL

NORTH CAROLINA PROFESSIONAL ENGINEER SEAL 034828 KEVIN E. SCHAEFER

PRIME CONSULTANT

IBI GROUP
421 Fayetteville Street, Suite 1609
Raleigh, NC 27601, USA
tel 919 851 4211
ibigroup.com

PROJECT

ROLESVILLE PUBLIC WORKS

805 E. YOUNG STREET
ROLESVILLE NC

PROJECT NO: 135941	
DRAWN BY: **RMC**	CHECKED BY: **KS**
PROJECT MGR: **MH**	APPROVED BY: **KS**
SCALE: **As indicated**	DATE: **2022-07-01**

SHEET TITLE

ELECTRICAL DETAILS

SHEET NUMBER **E300** | ISSUE **0**

BIM 360://135941-Rolesville_Public_Works R2020/135941_Rolesville_Elec_v20_Updated_RMC.rvt

10mm

SCALE CHECK 1 in

2022-09-21 12:06:49 PM