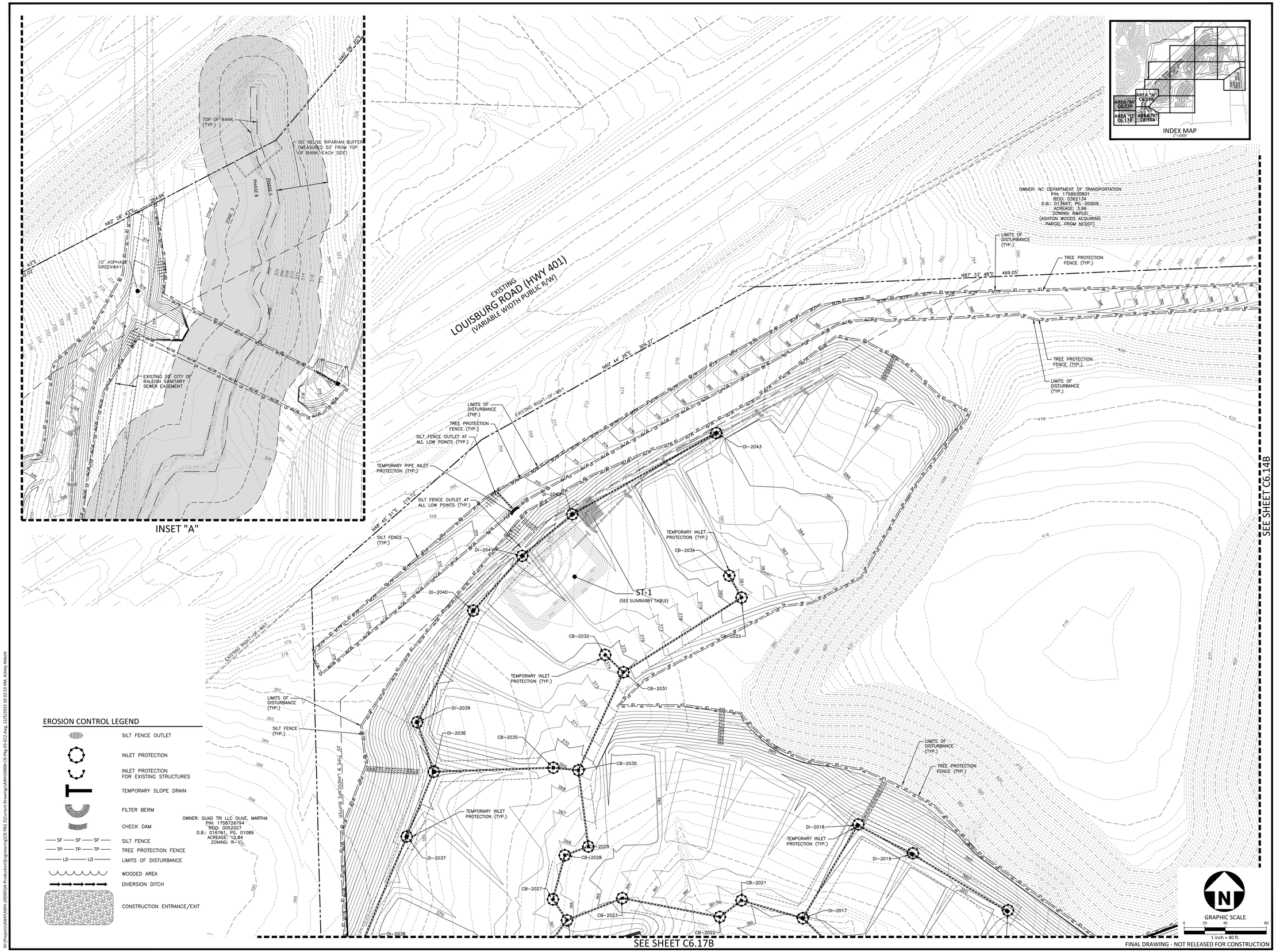

EROSION CONTROL LEGEND

- SILT FENCE OUTLET
- INLET PROTECTION
- INLET PROTECTION FOR EXISTING STRUCTURES
- TEMPORARY SLOPE DRAIN
- FILTER BERM
- CHECK DAM
- SF — SF — SF — SILT FENCE
- TP — TP — TP — TREE PROTECTION FENCE
- LD — LD — LIMITS OF DISTURBANCE
- WOODED AREA
- DIVERSION DITCH
- CONSTRUCTION ENTRANCE/EXIT

FINAL DRAWING - NOT RELEASED FOR CONSTRUCTION

McADAMS
The John R. McAdams Company, Inc.
2905 Meridian Parkway
Durham, NC 27713

phone 919. 361. 5000
fax 919. 361. 2269
license number: C-0293, C-187

www.mcadamsco.com

CLIENT

ASHTON RALEIGH RESIDENTIAL, LLC.
900 RIDGEFIELD DRIVE, SUITE 335
RALEIGH, NORTH CAROLINA 27609
PHONE: 919. 422. 7663
CONTACT: BOB MISHLER

ASHTON WOODS

THE POINT
PHASES 8 AND 14
CONSTRUCTION DRAWINGS - PACKAGE 3
EAST YOUNG STREET
TOWN OF ROLESVILLE, WAKE FOREST TOWNSHIP,
WAKE COUNTY, NORTH CAROLINA

CD XX-XX

NORTH CAROLINA PROFESSIONAL SEAL 22630 ENGINEER WILLIAM T. O'DANIEL
NOT FOR CONSTRUCTION

REVISIONS

NO.	DATE

PLAN INFORMATION

PROJECT NO.	AWH-20000
FILENAME	AWH20000-CD-PKG-03-E2
CHECKED BY	WTO
DRAWN BY	TKD
SCALE	1"=40'
DATE	12. 6. 2023

SHEET

EROSION CONTROL PLAN
STAGE 2
AREA "M"

C6.13B

M:\Projects\AWH\AWH-20000\04-Production\Engineering\CD PKG 3\Current Drawings\AWH20000-CD-Pkg-03-EC2.dwg, 12/5/2023 10:32:53 AM, Ashley Abbott

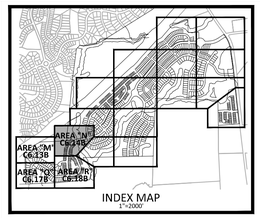

INDEX MAP
1"=2000'

EROSION CONTROL LEGEND

- SILT FENCE OUTLET
- INLET PROTECTION
- INLET PROTECTION FOR EXISTING STRUCTURES
- TEMPORARY SLOPE DRAIN
- FILTER BERM
- CHECK DAM
- SF — SF — SF — SILT FENCE
- TP — TP — TP — TREE PROTECTION FENCE
- LD — LD — LIMITS OF DISTURBANCE
- WOODED AREA
- DIVERSION DITCH
- CONSTRUCTION ENTRANCE/EXIT

SEE INSET "A" - SHEET C6.13B

EXISTING LOUISBURG ROAD (HWY 401) (VARIABLE WIDTH PUBLIC R/W)

EXISTING HIGHWAY "B" - WAY

EXISTING 20' CITY OF RALEIGH SANITARY SEWER EASEMENT

SILT FENCE (TYP.)

TREE PROTECTION FENCE (TYP.)

LIMITS OF DISTURBANCE (TYP.)

50' NEUSE RIPARIAN BUFFER (MEASURED 50' FROM TOP OF BANK, EACH SIDE)

STORMWATER CONTROL MEASURE "J" UNDER CONSTRUCTION

SOLACE WAY (50' PUBLIC R/W)

TOP OF BANK (TYP.)

TEMPORARY PIPE INLET PROTECTION (TYP.)

OUTFALL - 1

CD PACKAGE 2 CURRENTLY UNDER CONSTRUCTION

40' STORM DRAINAGE EASEMENT

SILT FENCE OUTLET AT ALL LOW POINTS (TYP.)

TEMPORARY CONCRETE WASHOUT

CB-1104

CB-1101

CB-1107

QUARRY ROAD (60' PUBLIC R/W)

STEMPORARY GRAVEL CONSTRUCTION ENTRANCE/EXIT

CB-1103

CB-1102

DI-1105

CHARM COURT (50' PUBLIC R/W)

RIP RAP BASIN RB-1
WEIR=5' LONG
DRAINAGE AREA=0.10 AC.
STORAGE REQUIRED=175 CF
STORAGE PROVIDED=260 CF
WEIR ELEVATION=299.00
TOP OF BERM ELEVATION=302.00

DI-1111

TEMPORARY INLET PROTECTION (TYP.)

CB-1110

DI-1114

CB-1108

CB-1106

40' STORM DRAINAGE EASEMENT

RIP RAP BASIN RB-3
WEIR=5' LONG
DRAINAGE AREA=0.08 AC.
STORAGE REQUIRED=140 CF
STORAGE PROVIDED=150 CF
WEIR ELEVATION=299.00
TOP OF BERM ELEVATION=302.00

RIP RAP BASIN RB-2
WEIR=5' LONG
DRAINAGE AREA=0.10 AC.
STORAGE REQUIRED=187 CF
STORAGE PROVIDED=260 CF
WEIR ELEVATION=299.00
TOP OF BERM ELEVATION=302.00

CB-1113

CB-1112

DI-1109

N89° 30' 43"E 535.11'

N89° 08' 47"E 266.04'

OWNER: NC DEPARTMENT OF TRANSPORTATION
PIN: 1758930801
REID: 0362134
D.B.: 013667, PG: 00509
ACREAGE: 3.98
ZONING: R&PUD
(ASHTON WOODS ACQUIRING PARCEL FROM NCDOT)

LIMITS OF DISTURBANCE (TYP.)

TREE PROTECTION FENCE (TYP.)

TREE PROTECTION FENCE (TYP.)

LIMITS OF DISTURBANCE (TYP.)

DI-1833

CB-1832

CB-1834

DI-1835

CB-1830

TEMPORARY INLET PROTECTION (TYP.)

CB-1831

DI-1829

CB-1828

CB-1827

CB-1826

CB-1825

CB-1836

CB-1837

ST-2
(SEE SUMMARY TABLE)

CB-1822

CB-1823

DI-1824

CB-1621

CB-1820

INSTALL INLET AND STORM DRAIN AFTER ST-2 HAS BEEN REMOVED BY PERMISSION OF WAKE COUNTY

CB-1819

SILT FENCE (TYP.)

TREE PROTECTION FENCE (TYP.)

LIMITS OF DISTURBANCE (TYP.)

50' NEUSE RIPARIAN BUFFER (MEASURED 50' FROM TOP OF BANK, EACH SIDE)

TEMPORARY PIPE INLET PROTECTION (TYP.)

SILT FENCE OUTLET AT ALL LOW POINTS (TYP.)

TOP OF BANK (TYP.)

EXISTING 20' CITY OF RALEIGH SANITARY SEWER EASEMENT

EXISTING 20' CITY OF RALEIGH SANITARY SEWER EASEMENT

20' TYPE B LANDSCAPE BUFFER

SEE SHEET C6.13B

SEE SHEET C6.18B

GRAPHIC SCALE
0 20 40 80
1 inch = 40 ft.

FINAL DRAWING - NOT RELEASED FOR CONSTRUCTION

McADAMS
The John R. McAdams Company, Inc.
2905 Meridian Parkway
Durham, NC 27713

phone 919. 361. 5000
fax 919. 361. 2269
license number: C-0293, C-187

www.mcadamsco.com

CLIENT

ASHTON RALEIGH RESIDENTIAL, LLC.
900 RIDGEFIELD DRIVE, SUITE 335
RALEIGH, NORTH CAROLINA 27609
PHONE: 919. 422. 7663
CONTACT: BOB MISHLER

ASHTON WOODS

THE POINT
PHASES 8 AND 14
CONSTRUCTION DRAWINGS - PACKAGE 3
EAST YOUNG STREET
TOWN OF ROLESVILLE, WAKE FOREST TOWNSHIP, WAKE COUNTY, NORTH CAROLINA

CD XX-XX

NORTH CAROLINA PROFESSIONAL SEAL 22630 ENGINEER WILLIAM T. O'DANIEL
NOT FOR CONSTRUCTION

REVISIONS

NO.	DATE

PLAN INFORMATION

PROJECT NO.	AWH-20000
FILENAME	AWH20000-CD-PKG-03-E2
CHECKED BY	WTO
DRAWN BY	.
SCALE	1"=40'
DATE	12. 08. 2023

SHEET

EROSION CONTROL PLAN STAGE 2 AREA "N"

C6.14B

M:\Projects\AWH\AWH-20000\04-Production\Engineering\CD PKG 3\Current Drawings\AWH20000-CD-PKG-03-EC2.dwg, 12/6/2023 4:59:37 PM, Ashley Abbott

SEE SHEET C6.13B

SEE SHEET C6.18B

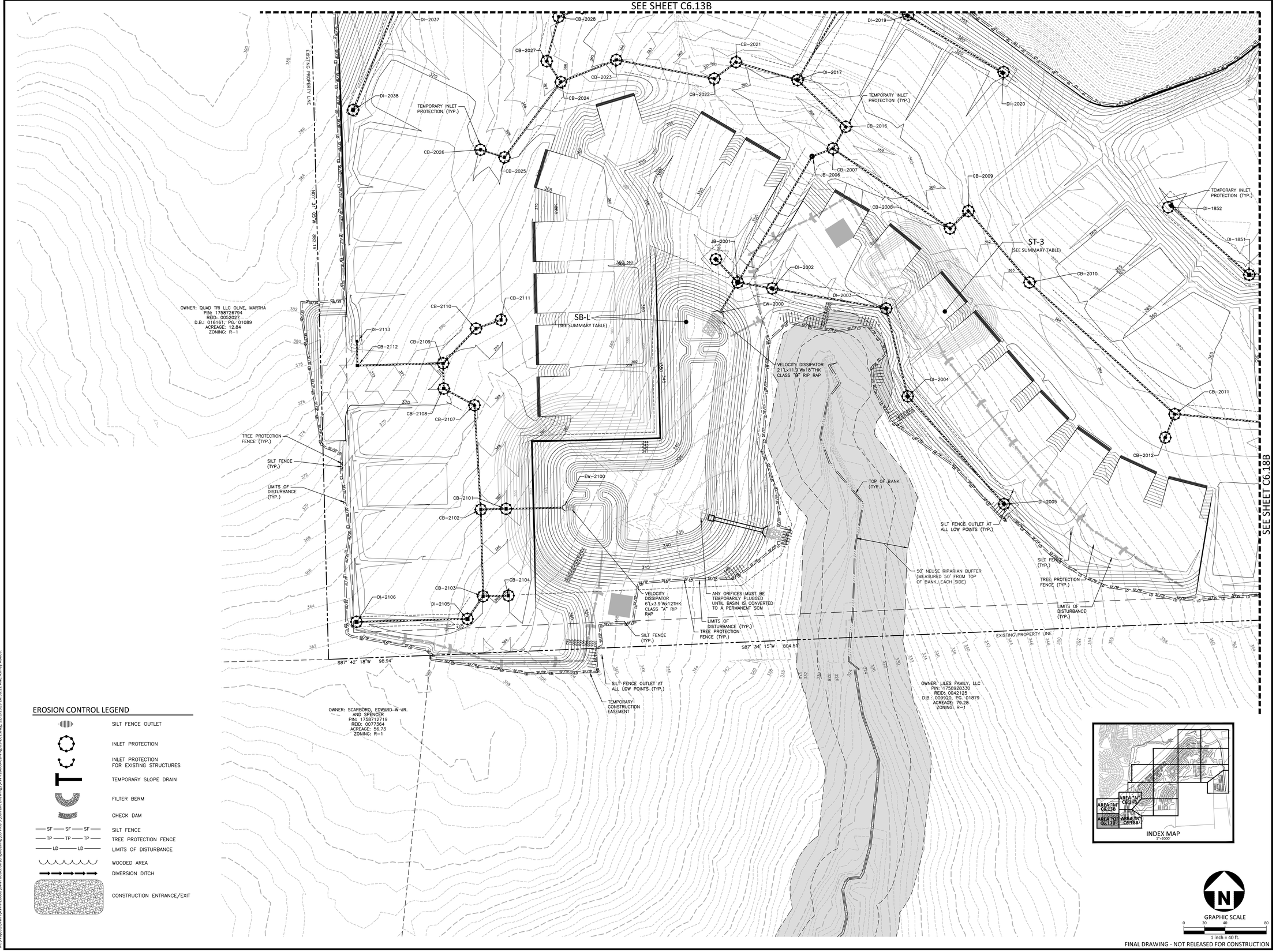

EROSION CONTROL LEGEND

- SILT FENCE OUTLET
- INLET PROTECTION
- INLET PROTECTION FOR EXISTING STRUCTURES
- TEMPORARY SLOPE DRAIN
- FILTER BERM
- CHECK DAM
- SF — SF — SF — SILT FENCE
- TP — TP — TP — TREE PROTECTION FENCE
- LD — LD — LIMITS OF DISTURBANCE
- WOODED AREA
- DIVERSION DITCH
- CONSTRUCTION ENTRANCE/EXIT

INDEX MAP
1"=2000'

GRAPHIC SCALE
0 20 40 80
1 inch = 40 ft.

FINAL DRAWING - NOT RELEASED FOR CONSTRUCTION

McADAMS
The John R. McAdams Company, Inc.
2905 Meridian Parkway
Durham, NC 27713

phone 919. 361. 5000
fax 919. 361. 2269
license number: C-0293, C-187

www.mcadamsco.com

CLIENT

ASHTON RALEIGH RESIDENTIAL, LLC.
900 RIDGEFIELD DRIVE, SUITE 335
RALEIGH, NORTH CAROLINA 27609
PHONE: 919. 422. 7663
CONTACT: BOB MISHLER

ASHTON WOODS

THE POINT
PHASES 8 AND 14
CONSTRUCTION DRAWINGS - PACKAGE 3
EAST YOUNG STREET
TOWN OF ROLESVILLE, WAKE FOREST TOWNSHIP, WAKE COUNTY, NORTH CAROLINA

CD XX-XX

NORTH CAROLINA PROFESSIONAL SEAL 22630 ENGINEER WILLIAM T O'DANIEL
NOT FOR CONSTRUCTION

REVISIONS

NO.	DATE

PLAN INFORMATION

PROJECT NO.	AWH-20000
FILENAME	AWH20000-CD-PKG-03-E2
CHECKED BY	WTO
DRAWN BY	TKD
SCALE	1"=40'
DATE	12. 6. 2023

SHEET

EROSION CONTROL PLAN STAGE 2 AREA "Q"

C6.17B

M:\Projects\AWH\AWH-20000\04-Production\Engineering\CD PKG 3\Current Drawings\AWH20000-CD-Pkg-03-E2.dwg, 12/5/2023 10:38:22 AM, Ashley Abbott

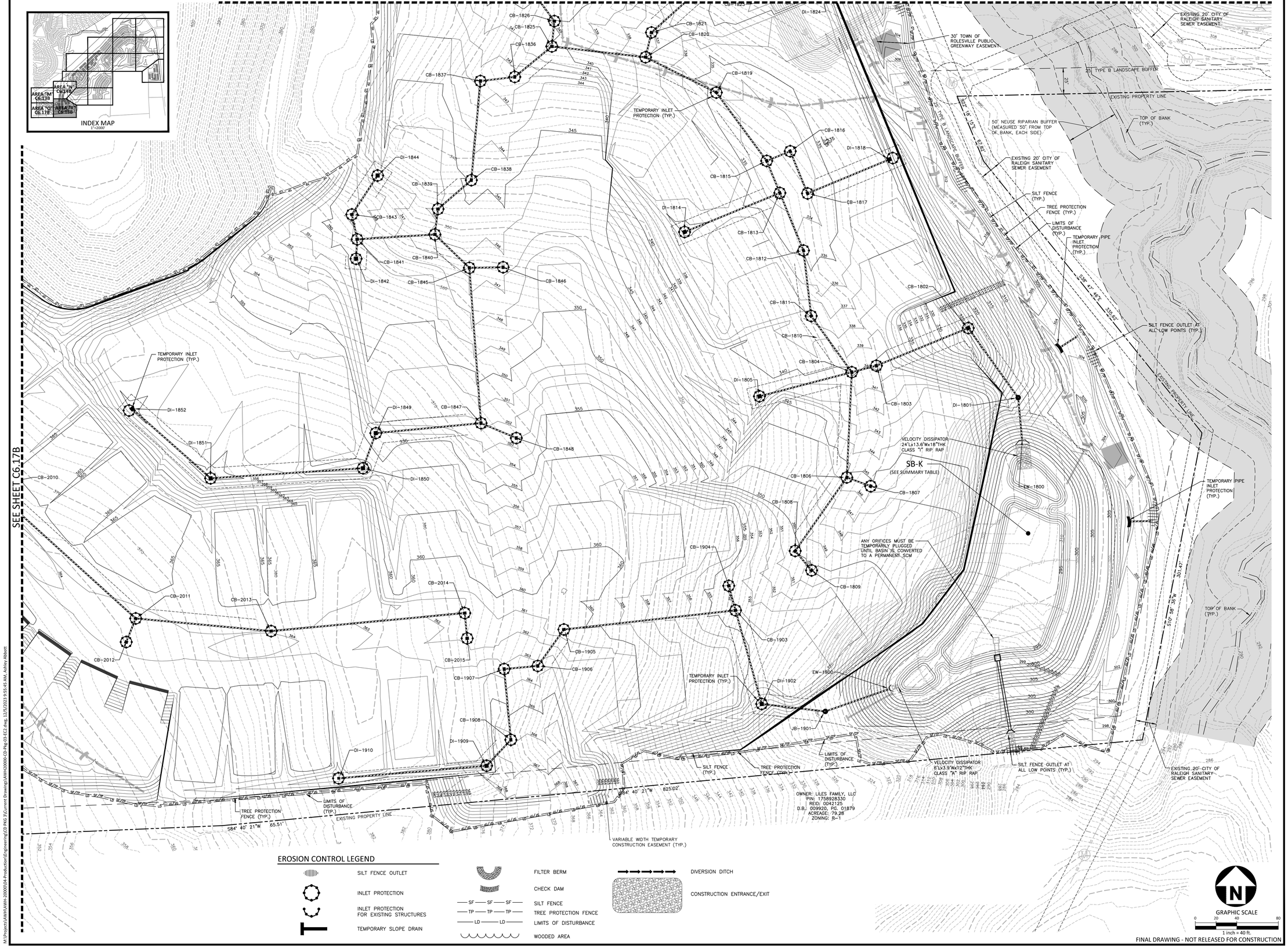

FINAL DRAWING - NOT RELEASED FOR CONSTRUCTION

M:\Projects\AWH\AWH-20000\04-Production\Engineering\CD PKG 3\Current Drawings\AWH20000-CD-Pkg-03-E2.dwg, 12/5/2023 9:55:45 AM, Ashley Abbott

McADAMS
The John R. McAdams Company, Inc.
2905 Meridian Parkway
Durham, NC 27713

phone 919. 361. 5000
fax 919. 361. 2269
license number: C-0293, C-187

www.mcadamsco.com

CLIENT

ASHTON RALEIGH RESIDENTIAL, LLC.
900 RIDGEFIELD DRIVE, SUITE 335
RALEIGH, NORTH CAROLINA 27609
PHONE: 919. 422. 7663
CONTACT: BOB MISHLER

ASHTON WOODS

THE POINT
PHASES 8 AND 14
CONSTRUCTION DRAWINGS - PACKAGE 3
EAST YOUNG STREET
TOWN OF ROLESVILLE, WAKE FOREST TOWNSHIP, WAKE COUNTY, NORTH CAROLINA

CD XX-XX

NORTH CAROLINA PROFESSIONAL SEAL 22630 ENGINEER WILLIAM T. O'DANIEL
NOT FOR CONSTRUCTION

REVISIONS

NO. DATE

PLAN INFORMATION

PROJECT NO.	AWH-20000
FILENAME	AWH20000-CD-PKG-03-E2
CHECKED BY	WTO
DRAWN BY	TKD
SCALE	1"=40'
DATE	12. 6. 2023

SHEET

EROSION CONTROL PLAN
STAGE 2
AREA "R"

C6.18B

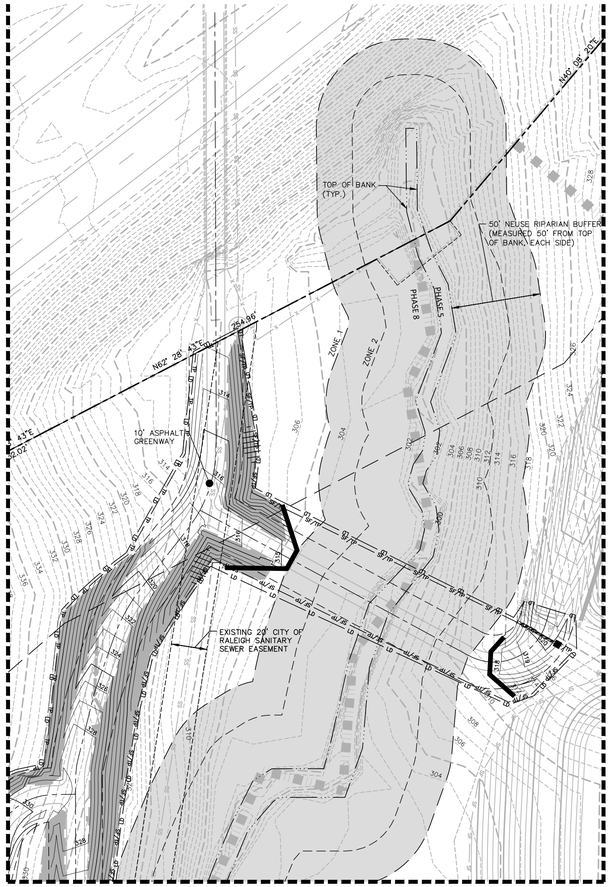

INSET "A"

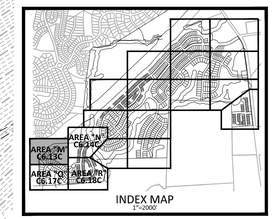

INDEX MAP
1"=2000'

EXISTING
LOUISBURG ROAD (HWY 401)
(VARIABLE WIDTH PUBLIC R/W)

OWNER: NC DEPARTMENT OF TRANSPORTATION
PIN: 1758930807
REID: 0362134
D.B.: 013667, PG. 00509
ACREAGE: 3.96
ZONING: R&PUD
(ASHTON WOODS ACQUIRING PARCEL FROM NCDOT)

30' TOWN OF ROLESVILLE PUBLIC GREENWAY EASEMENT

N87° 33' 48"E 469.05'

10' ASPHALT GREENWAY

LIMITS OF DISTURBANCE (TYP.)

TREE PROTECTION FENCE (TYP.)

N60° 44' 26"E 304.37'

SILT FENCE (TYP.)

EXISTING RIGHT-OF-WAY

OS-5

100' TYPE B LANDSCAPE BUFFER

DI-2043

780 781 782 779 778 777 776 775 774 773 772 771 770 783 784 785 786 787 788 789

SILT FENCE OUTLET AT ALL LOW POINTS (TYP.)

TEMPORARY PIPE INLET PROTECTION (TYP.)

N48° 45' 51"E 219.72'

DI-2042

TEMPORARY INLET PROTECTION (TYP.)

DI-2041

DI-2040

MARROW COURT
(50' PUBLIC R/W)

DI-2034

DI-2033

CB-2032

CB-2031

DI-2039

CB-2030

CB-2035

DI-2036

CB-2029

REVERIE WAY
(50' PUBLIC R/W)

CB-2028

CB-2027

CB-2023

CB-2022

CB-2021

CB-2024

DI-2037

DI-2018

DI-2019

DI-2017

DI-2020

RETAINING WALL (DESIGN BY OTHERS)

SHADING DEPICTS SLOPES REQUIRING A TEMPORARY TURF REINFORCEMENT MATTING EQUAL TO 'NORTH AMERICAN GREEN 'ERONET S75BN' WITH 'STAPLE PATTERN "C"' (TYP.)

TEMPORARY INLET PROTECTION (TYP.)

25' TYPE B LANDSCAPE BUFFER

TREE PROTECTION FENCE (TYP.)

SILT FENCE (TYP.)

OWNER: QUAD TRI LLC OLIVE, MARTHA
PIN: 1758726794
REID: 0052027
D.B.: 016161, PG. 01089
ACREAGE: 12.84
ZONING: R-10

RETAINING WALL (DESIGN BY OTHERS)

OS-5

SEE SHEET C6.14C

SEE SHEET C6.17C

EROSION CONTROL LEGEND

- SILT FENCE OUTLET
- INLET PROTECTION
- INLET PROTECTION FOR EXISTING STRUCTURES
- TEMPORARY SLOPE DRAIN
- FILTER BERM
- CHECK DAM
- SF — SF — SF — SILT FENCE
- TP — TP — TP — TREE PROTECTION FENCE
- LD — LD — LIMITS OF DISTURBANCE
- WOODED AREA
- DIVERSION DITCH
- CONSTRUCTION ENTRANCE/EXIT

GRAPHIC SCALE
0 20 40 80
1 inch = 40 ft.

FINAL DRAWING - NOT RELEASED FOR CONSTRUCTION

M:\Projects\AWH\AWH-20000\04-Production\Engineering\CD PKG 3\Current Drawings\AWH20000-CD-PKG-03-EC3.dwg, 12/5/2023 10:24:09 AM, Ashley Abbott

McADAMS
The John R. McAdams Company, Inc.
2905 Meridian Parkway
Durham, NC 27713

phone 919. 361. 5000
fax 919. 361. 2269
license number: C-0293, C-187

www.mcadamsco.com

CLIENT

ASHTON RALEIGH RESIDENTIAL, LLC.
900 RIDGEFIELD DRIVE, SUITE 335
RALEIGH, NORTH CAROLINA 27609
PHONE: 919. 422. 7663
CONTACT: BOB MISHLER

ASHTON WOODS

THE POINT
PHASES 8 AND 14
CONSTRUCTION DRAWINGS - PACKAGE 3
EAST YOUNG STREET
TOWN OF ROLESVILLE, WAKE FOREST TOWNSHIP,
WAKE COUNTY, NORTH CAROLINA

CD XX-XX

NORTH CAROLINA PROFESSIONAL SEAL 22630 ENGINEER WILLIAM T. O'DANIEL
NOT RELEASED FOR CONSTRUCTION

REVISIONS

NO.	DATE

PLAN INFORMATION

PROJECT NO.	AWH-20000
FILENAME	AWH20000-CD-PKG-03-E2
CHECKED BY	WTO
DRAWN BY	TKD
SCALE	1"=40'
DATE	12. 6. 2023

SHEET

EROSION CONTROL PLAN
STAGE 3
AREA "M"

C6.13C

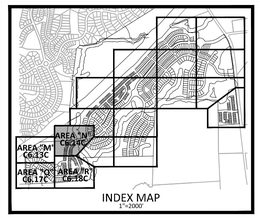

INDEX MAP
1"=2000'

EROSION CONTROL LEGEND

- SILT FENCE OUTLET
- INLET PROTECTION
- INLET PROTECTION FOR EXISTING STRUCTURES
- TEMPORARY SLOPE DRAIN
- FILTER BERM
- CHECK DAM
- SF — SF — SF — SILT FENCE
- TP — TP — TP — TREE PROTECTION FENCE
- LD — LD — LIMITS OF DISTURBANCE
- WOODED AREA
- DIVERSION DITCH
- CONSTRUCTION ENTRANCE/EXIT

SEE INSET "A" - SHEET C6.13C

EXISTING LOUISBURG ROAD (HWY 401) (VARIABLE WIDTH PUBLIC R/W)

EXISTING RIGHT-OF-WAY

10' ASPHALT GREENWAY

100' TYPE B LANDSCAPE BUFFER

EXISTING 20' CITY OF RALEIGH SANITARY SEWER EASEMENT

TREE PROTECTION FENCE (TYP.)

30' TOWN OF ROLESVILLE PUBLIC GREENWAY EASEMENT

N09° 30' 43"E 535.11'

50' NEUSE RIPARIAN BUFFER (MEASURED 50' FROM TOP OF BANK, EACH SIDE)

TOP OF BANK (TYP.)

STORMWATER CONTROL MEASURE "I" (WET POND)

OS-18

SOLACE WAY (50' PUBLIC R/W)

OS-22

TEMPORARY PIPE INLET PROTECTION (TYP.)

STORMWATER CONTROL MEASURE ACCESS AND MAINTENANCE EASEMENT

SHADING DEPICTS 'SLOPES REQUIRING A TEMPORARY TURF REINFORCEMENT MATTING EQUAL TO NORTH AMERICAN GREEN "ERONET S75BN" WITH STAPLE PATTERN "C" (TYP.)

OS-5

CONCRETE EXERCISE STATION

PROPOSED 40' CITY OF RALEIGH SANITARY SEWER EASEMENT

40' STORM DRAINAGE EASEMENT

OUTFALL - 1

CB-1104

QUARRY ROAD (60' PUBLIC R/W)

CB-1101

CB-1107

OS-23

DI-1111

668

669

670

671

CB-1110

CB-1102

CB-1103

CB-1106

DI-1105

OS-8

DI-1114

672

673

674

675

676

677

678

679

680

681

682

683

684

685

686

687

CB-1108

CB-1113

CB-1112

624

625

626

627

628

629

630

631

632

633

634

635

636

637

638

639

DI-1109

DI-1835

CB-1832

CB-1834

DI-1833

CB-1830

CB-1831

CB-1828

CB-1827

CB-1822

CB-1823

DI-1824

CB-1821

CB-1826

CB-1825

CB-1820

CB-1819

CB-1837

CB-1836

OWNER: NC DEPARTMENT OF TRANSPORTATION
PIN: 1758930801
REID: 0362134
D.B.: 013667, PG: 00509
ACREAGE: 3.98
ZONING: R&PUD
(ASHTON WOODS ACQUIRING PARCEL FROM NCDOT)

30' TOWN OF ROLESVILLE PUBLIC GREENWAY EASEMENT

N88° 08' 47"E 266.04'

RETAINING WALL (DESIGN BY OTHERS)

TEMPORARY INLET PROTECTION (TYP.)

10' ASPHALT GREENWAY

LIMITS OF DISTURBANCE (TYP.)

TREE PROTECTION FENCE (TYP.)

SEE SHEET C6.13C

PHASE 14

PHASE 8

OS-5

OS-7

MAIL KIOSK AREA "4"

REVERIE WAY (50' PUBLIC R/W)

SILT FENCE (TYP.)

TREE PROTECTION FENCE (TYP.)

40' STORM DRAINAGE EASEMENT

VELOCITY DISSIPATOR 40'Lx20'Wx24"THK CLASS "I" RIP RAP

10' ASPHALT GREENWAY

30' TOWN OF ROLESVILLE PUBLIC GREENWAY EASEMENT

PROPOSED 40' CITY OF RALEIGH SANITARY SEWER EASEMENT

PHASE 5

PHASE 8

50' NEUSE RIPARIAN BUFFER (MEASURED 50' FROM TOP OF BANK, EACH SIDE)

OS-8

RETAINING WALL (DESIGN BY OTHERS)

RETAINING WALL (DESIGN BY OTHERS)

TEMPORARY PIPE INLET PROTECTION (TYP.)

TOP OF BANK (TYP.)

STORMWATER CONTROL MEASURE ACCESS AND MAINTENANCE EASEMENT

STORMWATER CONTROL MEASURE "K" (WET POND)

OS-8

SILT FENCE OUTLET AT ALL LOW POINTS (TYP.)

10' ASPHALT GREENWAY

EXISTING 20' CITY OF RALEIGH SANITARY SEWER EASEMENT

PHASE 5

PHASE 8

SILT FENCE (TYP.)

TREE PROTECTION FENCE (TYP.)

LIMITS OF DISTURBANCE (TYP.)

EXISTING 20' CITY OF RALEIGH SANITARY SEWER EASEMENT

CHARM COURT (50' PUBLIC R/W)

25' TYPE B LANDSCAPE BUFFER

GRAPHIC SCALE
0 20 40 80
1 inch = 40 ft.

SEE SHEET C6.18C

FINAL DRAWING - NOT RELEASED FOR CONSTRUCTION

M:\Projects\AWH\AWH-20000\04-Production\Engineering\CD PKG 3\Current Drawings\AWH20000-CD-Pkg-03-EC3.dwg, 12/6/2023 5:01:02 PM, Ashley Abbott

McADAMS
The John R. McAdams Company, Inc.
2905 Meridian Parkway
Durham, NC 27713

phone 919. 361. 5000
fax 919. 361. 2269
license number: C-0293, C-187

www.mcadamsco.com

CLIENT

ASHTON RALEIGH RESIDENTIAL, LLC.
900 RIDGEFIELD DRIVE, SUITE 335
RALEIGH, NORTH CAROLINA 27609
PHONE: 919. 422. 7663
CONTACT: BOB MISHLER

ASHTON WOODS

THE POINT
PHASES 8 AND 14
CONSTRUCTION DRAWINGS - PACKAGE 3
EAST YOUNG STREET
TOWN OF ROLESVILLE, WAKE FOREST TOWNSHIP, WAKE COUNTY, NORTH CAROLINA

CD XX-XX

NORTH CAROLINA PROFESSIONAL SEAL 22630 ENGINEER WILLIAM T. O'DANIEL
NOT VALID WITHOUT ORIGINAL SIGNATURE

REVISIONS

NO.	DATE

PLAN INFORMATION

PROJECT NO.	AWH-20000
FILENAME	AWH20000-CD-PKG-03-E2
CHECKED BY	WTO
DRAWN BY	.
SCALE	1"=40'
DATE	12. 08. 2023

SHEET

EROSION CONTROL PLAN
STAGE 3
AREA "N"

C6.14C

SEE SHEET C6.13C

SEE SHEET C6.18C

MARROW COURT
(50' PUBLIC R/W)

REVERIE WAY
(50' PUBLIC R/W)

TROUPE WAY
(50' PUBLIC R/W)

REVERIE WAY
(50' PUBLIC R/W)

REVERIE WAY
(50' PUBLIC R/W)

EXISTING PROPERTY LINE

25' TYPE B LANDSCAPE BUFFER

TREE PROTECTION FENCE (TYP.)

LIMITS OF DISTURBANCE (TYP.)

SILT FENCE (TYP.)

RETAINING WALL (DESIGN BY OTHERS)

TEMPORARY INLET PROTECTION (TYP.)

VARIABLE WIDTH TEMPORARY CONSTRUCTION EASEMENT (TYP.)

VELOCITY DISSIPATOR 21'Lx11.9'Wx18"THK CLASS "B" RIP RAP

STORMWATER CONTROL MEASURE "L" (WET POND)

OS-4

OS-5

TOP OF BANK (TYP.)

50' NEUSE RIPARIAN BUFFER (MEASURED 50' FROM TOP OF BANK, EACH SIDE)

SILT FENCE OUTLET AT ALL LOW POINTS (TYP.)

VELOCITY DISSIPATOR 6'Lx3.9'Wx12"THK CLASS "A" RIP RAP

S87° 42' 18"W 98.94'

S87° 34' 15"W 804.51'

OWNER: QUAD TRI LLC OLIVE, MARTHA
PIN: 1758726794
REID: 0052027
D.B.: 016161; PG. 01089
ACREAGE: 12.84
ZONING: R-1

OWNER: SCARBORO, EDWARD W JR. AND SPENCER
PIN: 1758712719
REID: 0077364
ACREAGE: 56.73
ZONING: R-1

OWNER: LILES FAMILY, LLC
PIN: 1758928330
REID: 0042125
D.B.: 009920, PG. 01879
ACREAGE: 79.28
ZONING: R-1

SHADING DEPICTS SLOPES REQUIRING A TEMPORARY TURF REINFORCEMENT MATTING EQUAL TO NORTH AMERICAN GREEN "ERONET S75BN" WITH STAPLE PATTERN "C" / (TYP.)

EROSION CONTROL LEGEND

- SILT FENCE OUTLET
- INLET PROTECTION
- INLET PROTECTION FOR EXISTING STRUCTURES
- TEMPORARY SLOPE DRAIN
- FILTER BERM
- CHECK DAM
- SF SF SF — SILT FENCE
- TP TP TP — TREE PROTECTION FENCE
- LD LD — LIMITS OF DISTURBANCE
- WOODED AREA
- DIVERSION DITCH
- CONSTRUCTION ENTRANCE/EXIT

INDEX MAP
1"=2000'

AREA "M" C6.13C
AREA "N" C6.14C
AREA "Q" C6.17C
AREA "R" C6.18C

GRAPHIC SCALE
0 20 40 80
1 inch = 40 ft.

FINAL DRAWING - NOT RELEASED FOR CONSTRUCTION

McADAMS
The John R. McAdams Company, Inc.
2905 Meridian Parkway
Durham, NC 27713

phone 919. 361. 5000
fax 919. 361. 2269
license number: C-0293, C-187

www.mcadamsco.com

CLIENT

ASHTON RALEIGH RESIDENTIAL, LLC.
900 RIDGEFIELD DRIVE, SUITE 335
RALEIGH, NORTH CAROLINA 27609
PHONE: 919. 422. 7663
CONTACT: BOB MISHLER

ASHTON WOODS

THE POINT
PHASES 8 AND 14
CONSTRUCTION DRAWINGS - PACKAGE 3
EAST YOUNG STREET
TOWN OF ROLESVILLE, WAKE FOREST TOWNSHIP, WAKE COUNTY, NORTH CAROLINA

CD XX-XX

NORTH CAROLINA PROFESSIONAL SEAL 22630 ENGINEER WILLIAM T. O'DANIEL — NOT FOR CONSTRUCTION

REVISIONS

NO. DATE

PLAN INFORMATION

PROJECT NO.	AWH-20000
FILENAME	AWH20000-CD-PKG-03-E2
CHECKED BY	WTO
DRAWN BY	TKD
SCALE	1"=40'
DATE	12. 6. 2023

SHEET

EROSION CONTROL PLAN STAGE 3 AREA "Q"

C6.17C

M:\Projects\AWH\AWH-20000\04-Production\Engineering\CD PKG 3\Current Drawing\AWH20000-CD-Pkg-03-EC3.dwg, 12/5/2023 10:25:48 AM, Ashley Abbott

SEE SHEET C6.14C

SEE SHEET C6.17C

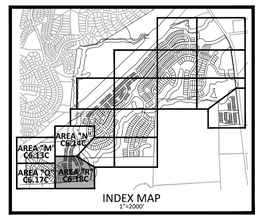

MARIAD COURT
(50' PUBLIC R/W)

QUARRY ROAD
(60' PUBLIC R/W)

REVERIE WAY
(50' PUBLIC R/W)

PLAY AREA

RETAINING WALL
(DESIGN BY OTHERS)

30' TYPE B LANDSCAPE BUFFER

25' TYPE B LANDSCAPE BUFFER

EXISTING PROPERTY LINE

30' TOWN OF ROLESVILLE PUBLIC GREENWAY EASEMENT

50' NEUSE RIPARIAN BUFFER (MEASURED 50' FROM TOP OF BANK, EACH SIDE)

SILT FENCE OUTLET AT ALL LOW POINTS (TYP.)

EXISTING 20' CITY OF RALEIGH SANITARY SEWER EASEMENT

TREE PROTECTION FENCE (TYP.)

10' ASPHALT GREENWAY

SILT FENCE (TYP.)

PROPOSED 30' CITY OF RALEIGH SANITARY SEWER EASEMENT

TEMPORARY PIPE INLET PROTECTION (TYP.)

TOP OF BANK (TYP.)

TEMPORARY INLET PROTECTION (TYP.)

VELOCITY DISSIPATOR 24'Lx13.6'Wx18"THK CLASS "I" RIP RAP

STORMWATER CONTROL MEASURE "K" (WET POND)

STORMWATER CONTROL MEASURE ACCESS AND MAINTENANCE EASEMENT

VELOCITY DISSIPATOR 6'Lx3.9'Wx12"THK CLASS "A" RIP RAP

LIMITS OF DISTURBANCE (TYP.)

OWNER: LILES FAMILY, LLC
PIN#: 1758928330
REID: 0042125
D.B.: 009920, PG. 01879
ACREAGE: 79.28
ZONING: R-1

VARIABLE WIDTH TEMPORARY CONSTRUCTION EASEMENT (TYP.)

SHADING DEPICTS SLOPES REQUIRING A TEMPORARY TURF REINFORCEMENT MATTING EQUAL TO NORTH AMERICAN GREEN "ERONET S75BN" WITH STAPLE PATTERN "C" (TYP.)

S84° 40' 21"W 825.02'

S84° 40' 21"W 65.51'

EROSION CONTROL LEGEND

- SILT FENCE OUTLET
- INLET PROTECTION
- INLET PROTECTION FOR EXISTING STRUCTURES
- TEMPORARY SLOPE DRAIN
- FILTER BERM
- CHECK DAM
- SF — SF — SF — SILT FENCE
- TP — TP — TP — TREE PROTECTION FENCE
- LD — LD — LD — LIMITS OF DISTURBANCE
- WOODED AREA
- DIVERSION DITCH
- CONSTRUCTION ENTRANCE/EXIT

GRAPHIC SCALE
0 20 40 80
1 inch = 40 ft.

FINAL DRAWING - NOT RELEASED FOR CONSTRUCTION

McADAMS
The John R. McAdams Company, Inc.
2905 Meridian Parkway
Durham, NC 27713

phone 919. 361. 5000
fax 919. 361. 2269
license number: C-0293, C-187

www.mcadamsco.com

CLIENT

ASHTON RALEIGH RESIDENTIAL, LLC.
900 RIDGEFIELD DRIVE, SUITE 335
RALEIGH, NORTH CAROLINA 27609
PHONE: 919. 422. 7663
CONTACT: BOB MISHLER

ASHTON WOODS

THE POINT
PHASES 8 AND 14
CONSTRUCTION DRAWINGS - PACKAGE 3
EAST YOUNG STREET
TOWN OF ROLESVILLE, WAKE FOREST TOWNSHIP,
WAKE COUNTY, NORTH CAROLINA

CD XX-XX

NORTH CAROLINA PROFESSIONAL SEAL 22630 ENGINEER WILLIAM T. O'DANIEL NOT FOR CONSTRUCTION

REVISIONS

NO.	DATE

PLAN INFORMATION

PROJECT NO.	AWH-20000
FILENAME	AWH20000-CD-PKG-03-E2
CHECKED BY	WTO
DRAWN BY	TKD
SCALE	1"=40'
DATE	12. 6. 2023

SHEET

EROSION CONTROL PLAN STAGE 3 AREA "R"

C6.18C

M:\Projects\AWH\AWH-20000\04-Production\Engineering\CD PKG 3\Current Drawings\AWH20000-CD-Pkg-03-EC3.dwg, 12/5/2023 10:01:24 AM, Ashley Abbott

GROUND STABILIZATION AND MATERIALS HANDLING PRACTICES FOR COMPLIANCE WITH THE NCG01 CONSTRUCTION GENERAL PERMIT

Implementing the details and specifications on this plan sheet will result in the construction activity being considered compliant with the Ground Stabilization and Materials Handling sections of the NCG01 Construction General Permit (Sections E and F, respectively). The permittee shall comply with the Erosion and Sediment Control plan approved by the delegated authority having jurisdiction. All details and specifications shown on this sheet may not apply depending on site conditions and the delegated authority having jurisdiction.

SECTION E: GROUND STABILIZATION

Required Ground Stabilization Timeframes		
Site Area Description	**Stabilize within this many calendar days after ceasing land disturbance**	**Timeframe variations**
(a) Perimeter dikes, swales, ditches, and perimeter slopes	7	None
(b) High Quality Water (HQW) Zones	7	None
(c) Slopes steeper than 3:1	7	If slopes are 10' or less in length and are not steeper than 2:1, 14 days are allowed
(d) Slopes 3:1 to 4:1	14	-7 days for slopes greater than 50' in length and with slopes steeper than 4:1 -7 days for perimeter dikes, swales, ditches, perimeter slopes and HQW Zones -10 days for Falls Lake Watershed
(e) Areas with slopes flatter than 4:1	14	-7 days for perimeter dikes, swales, ditches, perimeter slopes and HQW Zones -10 days for Falls Lake Watershed unless there is zero slope

Note: After the permanent cessation of construction activities, any areas with temporary ground stabilization shall be converted to permanent ground stabilization as soon as practicable but in no case longer than 90 calendar days after the last land disturbing activity. Temporary ground stabilization shall be maintained in a manner to render the surface stable against accelerated erosion until permanent ground stabilization is achieved.

GROUND STABILIZATION SPECIFICATION

Stabilize the ground sufficiently so that rain will not dislodge the soil. Use one of the techniques in the table below:

Temporary Stabilization	Permanent Stabilization
• Temporary grass seed covered with straw or other mulches and tackifiers • Hydroseeding • Rolled erosion control products with or without temporary grass seed • Appropriately applied straw or other mulch • Plastic sheeting	• Permanent grass seed covered with straw or other mulches and tackifiers • Geotextile fabrics such as permanent soil reinforcement matting • Hydroseeding • Shrubs or other permanent plantings covered with mulch • Uniform and evenly distributed ground cover sufficient to restrain erosion • Structural methods such as concrete, asphalt or retaining walls • Rolled erosion control products with grass seed

POLYACRYLAMIDES (PAMS) AND FLOCCULANTS

1. Select flocculants that are appropriate for the soils being exposed during construction, selecting from the *NC DWR List of Approved PAMS/Flocculants*.
2. Apply flocculants at or before the inlets to Erosion and Sediment Control Measures.
3. Apply flocculants at the concentrations specified in the *NC DWR List of Approved PAMS/Flocculants* and in accordance with the manufacturer's instructions.
4. Provide ponding area for containment of treated Stormwater before discharging offsite.
5. Store flocculants in leak-proof containers that are kept under storm-resistant cover or surrounded by secondary containment structures.

EQUIPMENT AND VEHICLE MAINTENANCE

1. Maintain vehicles and equipment to prevent discharge of fluids.
2. Provide drip pans under any stored equipment.
3. Identify leaks and repair as soon as feasible, or remove leaking equipment from the project.
4. Collect all spent fluids, store in separate containers and properly dispose as hazardous waste (recycle when possible).
5. Remove leaking vehicles and construction equipment from service until the problem has been corrected.
6. Bring used fuels, lubricants, coolants, hydraulic fluids and other petroleum products to a recycling or disposal center that handles these materials.

LITTER, BUILDING MATERIAL AND LAND CLEARING WASTE

1. Never bury or burn waste. Place litter and debris in approved waste containers.
2. Provide a sufficient number and size of waste containers (e.g dumpster, trash receptacle) on site to contain construction and domestic wastes.
3. Locate waste containers at least 50 feet away from storm drain inlets and surface waters unless no other alternatives are reasonably available.
4. Locate waste containers on areas that do not receive substantial amounts of runoff from upland areas and does not drain directly to a storm drain, stream or wetland.
5. Cover waste containers at the end of each workday and before storm events or provide secondary containment. Repair or replace damaged waste containers.
6. Anchor all lightweight items in waste containers during times of high winds.
7. Empty waste containers as needed to prevent overflow. Clean up immediately if containers overflow.
8. Dispose waste off-site at an approved disposal facility.
9. On business days, clean up and dispose of waste in designated waste containers.

PAINT AND OTHER LIQUID WASTE

1. Do not dump paint and other liquid waste into storm drains, streams or wetlands.
2. Locate paint washouts at least 50 feet away from storm drain inlets and surface waters unless no other alternatives are reasonably available.
3. Contain liquid wastes in a controlled area.
4. Containment must be labeled, sized and placed appropriately for the needs of site.
5. Prevent the discharge of soaps, solvents, detergents and other liquid wastes from construction sites.

PORTABLE TOILETS

1. Install portable toilets on level ground, at least 50 feet away from storm drains, streams or wetlands unless there is no alternative reasonably available. If 50 foot offset is not attainable, provide relocation of portable toilet behind silt fence or place on a gravel pad and surround with sand bags.
2. Provide staking or anchoring of portable toilets during periods of high winds or in high foot traffic areas.
3. Monitor portable toilets for leaking and properly dispose of any leaked material. Utilize a licensed sanitary waste hauler to remove leaking portable toilets and replace with properly operating unit.

EARTHEN STOCKPILE MANAGEMENT

1. Show stockpile locations on plans. Locate earthen-material stockpile areas at least 50 feet away from storm drain inlets, sediment basins, perimeter sediment controls and surface waters unless it can be shown no other alternatives are reasonably available.
2. Protect stockpile with silt fence installed along toe of slope with a minimum offset of five feet from the toe of stockpile.
3. Provide stable stone access point when feasible.
4. Stabilize stockpile within the timeframes provided on this sheet and in accordance with the approved plan and any additional requirements. Soil stabilization is defined as vegetative, physical or chemical coverage techniques that will restrain accelerated erosion on disturbed soils for temporary or permanent control needs.

CONCRETE WASHOUTS

1. Do not discharge concrete or cement slurry from the site.
2. Dispose of, or recycle settled, hardened concrete residue in accordance with local and state solid waste regulations and at an approved facility.
3. Manage washout from mortar mixers in accordance with the above item and in addition place the mixer and associated materials on impervious barrier and within lot perimeter silt fence.
4. Install temporary concrete washouts per local requirements, where applicable. If an alternate method or product is to be used, contact your approval authority for review and approval. If local standard details are not available, use one of the two types of temporary concrete washouts provided on this detail.
5. Do not use concrete washouts for dewatering or storing defective curb or sidewalk sections. Stormwater accumulated within the washout may not be pumped into or discharged to the storm drain system or receiving surface waters. Liquid waste must be pumped out and removed from project.
6. Locate washouts at least 50 feet from storm drain inlets and surface waters unless it can be shown that no other alternatives are reasonably available. At a minimum, install protection of storm drain inlet(s) closest to the washout which could receive spills or overflow.
7. Locate washouts in an easily accessible area, on level ground and install a stone entrance pad in front of the washout. Additional controls may be required by the approving authority.
8. Install at least one sign directing concrete trucks to the washout within the project limits. Post signage on the washout itself to identify this location.
9. Remove leavings from the washout when at approximately 75% capacity to limit overflow events. Replace the tarp, sand bags or other temporary structural components when no longer functional. When utilizing alternative or proprietary products, follow manufacturer's instructions.
10. At the completion of the concrete work, remove remaining leavings and dispose of in an approved disposal facility. Fill pit, if applicable, and stabilize any disturbance caused by removal of washout.

HERBICIDES, PESTICIDES AND RODENTICIDES

1. Store and apply herbicides, pesticides and rodenticides in accordance with label restrictions.
2. Store herbicides, pesticides and rodenticides in their original containers with the label, which lists directions for use, ingredients and first aid steps in case of accidental poisoning.
3. Do not store herbicides, pesticides and rodenticides in areas where flooding is possible or where they may spill or leak into wells, stormwater drains, ground water or surface water. If a spill occurs, clean area immediately.
4. Do not stockpile these materials onsite.

HAZARDOUS AND TOXIC WASTE

1. Create designated hazardous waste collection areas on-site.
2. Place hazardous waste containers under cover or in secondary containment.
3. Do not store hazardous chemicals, drums or bagged materials directly on the ground.

ONSITE CONCRETE WASHOUT STRUCTURE WITH LINER

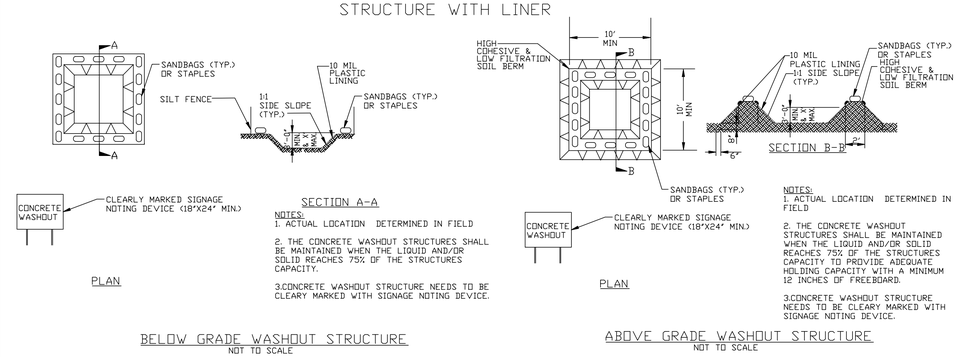

NCG01 GROUND STABILIZATION AND MATERIALS HANDLING | EFFECTIVE: 04/01/19

PART III
SELF-INSPECTION, RECORDKEEPING AND REPORTING

SECTION A: SELF-INSPECTION

Self-inspections are required during normal business hours in accordance with the table below. When adverse weather or site conditions would cause the safety of the inspection personnel to be in jeopardy, the inspection may be delayed until the next business day on which it is safe to perform the inspection. In addition, when a storm event of equal to or greater than 1.0 inch occurs outside of normal business hours, the self-inspection shall be performed upon the commencement of the next business day. Any time when inspections were delayed shall be noted in the Inspection Record.

Inspect	Frequency (during normal business hours)	Inspection records must include:
(1) Rain gauge maintained in good working order	Daily	Daily rainfall amounts. If no daily rain gauge observations are made during weekend or holiday periods, and no individual-day rainfall information is available, record the cumulative rain measurement for those un-attended days (and this will determine if a site inspection is needed). Days on which no rainfall occurred shall be recorded as "zero." The permittee may use another rain-monitoring device approved by the Division.
(2) E&SC Measures	At least once per 7 calendar days and within 24 hours of a rain event ≥ 1.0 inch in 24 hours	1. Identification of the measures inspected, 2. Date and time of the inspection, 3. Name of the person performing the inspection, 4. Indication of whether the measures were operating properly, 5. Description of maintenance needs for the measure, 6. Description, evidence, and date of corrective actions taken.
(3) Stormwater discharge outfalls (SDOs)	At least once per 7 calendar days and within 24 hours of a rain event ≥ 1.0 inch in 24 hours	1. Identification of the discharge outfalls inspected, 2. Date and time of the inspection, 3. Name of the person performing the inspection, 4. Evidence of indicators of stormwater pollution such as oil sheen, floating or suspended solids or discoloration, 5. Indication of visible sediment leaving the site, 6. Description, evidence, and date of corrective actions taken.
(4) Perimeter of site	At least once per 7 calendar days and within 24 hours of a rain event ≥ 1.0 inch in 24 hours	If visible sedimentation is found outside site limits, then a record of the following shall be made: 1. Actions taken to clean up or stabilize the sediment that has left the site limits, 2. Description, evidence, and date of corrective actions taken, and 3. An explanation as to the actions taken to control future releases.
(5) Streams or wetlands onsite or offsite (where accessible)	At least once per 7 calendar days and within 24 hours of a rain event ≥ 1.0 inch in 24 hours	If the stream or wetland has increased visible sedimentation or a stream has visible increased turbidity from the construction activity, then a record of the following shall be made: 1. Description, evidence and date of corrective actions taken, and 2. Records of the required reports to the appropriate Division Regional Office per Part III, Section C, Item (2)(a) of this permit.
(6) Ground stabilization measures	After each phase of grading	1. The phase of grading (installation of perimeter E&SC measures, clearing and grubbing, installation of storm drainage facilities, completion of all land-disturbing activity, construction or redevelopment, permanent ground cover). 2. Documentation that the required ground stabilization measures have been provided within the required timeframe or an assurance that they will be provided as soon as possible.

NOTE: The rain inspection resets the required 7 calendar day inspection requirement.

PART III
SELF-INSPECTION, RECORDKEEPING AND REPORTING

SECTION B: RECORDKEEPING

1. E&SC Plan Documentation

The approved E&SC plan as well as any approved deviation shall be kept on the site. The approved E&SC plan must be kept up-to-date throughout the coverage under this permit. The following items pertaining to the E&SC plan shall be kept on site and available for inspection at all times during normal business hours.

Item to Document	Documentation Requirements
(a) Each E&SC measure has been installed and does not significantly deviate from the locations, dimensions and relative elevations shown on the approved E&SC plan.	Initial and date each E&SC measure on a copy of the approved E&SC plan or complete, date and sign an inspection report that lists each E&SC measure shown on the approved E&SC plan. This documentation is required upon the initial installation of the E&SC measures or if the E&SC measures are modified after initial installation.
(b) A phase of grading has been completed.	Initial and date a copy of the approved E&SC plan or complete, date and sign an inspection report to indicate completion of the construction phase.
(c) Ground cover is located and installed in accordance with the approved E&SC plan.	Initial and date a copy of the approved E&SC plan or complete, date and sign an inspection report to indicate compliance with approved ground cover specifications.
(d) The maintenance and repair requirements for all E&SC measures have been performed.	Complete, date and sign an inspection report.
(e) Corrective actions have been taken to E&SC measures.	Initial and date a copy of the approved E&SC plan or complete, date and sign an inspection report to indicate the completion of the corrective action.

2. Additional Documentation to be Kept on Site

In addition to the E&SC plan documents above, the following items shall be kept on the site and available for inspectors at all times during normal business hours, unless the Division provides a site-specific exemption based on unique site conditions that make this requirement not practical:

(a) This General Permit as well as the Certificate of Coverage, after it is received.

(b) Records of inspections made during the previous twelve months. The permittee shall record the required observations on the Inspection Record Form provided by the Division or a similar inspection form that includes all the required elements. Use of electronically-available records in lieu of the required paper copies will be allowed if shown to provide equal access and utility as the hard-copy records.

3. Documentation to be Retained for Three Years

All data used to complete the e-NOI and all inspection records shall be maintained for a period of three years after project completion and made available upon request. [40 CFR 122.41]

PART III
SELF-INSPECTION, RECORDKEEPING AND REPORTING

SECTION C: REPORTING

1. Occurrences that Must be Reported

Permittees shall report the following occurrences:

(a) Visible sediment deposition in a stream or wetland.

(b) Oil spills if:
- They are 25 gallons or more,
- They are less than 25 gallons but cannot be cleaned up within 24 hours,
- They cause sheen on surface waters (regardless of volume), or
- They are within 100 feet of surface waters (regardless of volume).

(c) Releases of hazardous substances in excess of reportable quantities under Section 311 of the Clean Water Act (Ref: 40 CFR 110.3 and 40 CFR 117.3) or Section 102 of CERCLA (Ref: 40 CFR 302.4) or G.S. 143-215.85.

(d) Anticipated bypasses and unanticipated bypasses.

(e) Noncompliance with the conditions of this permit that may endanger health or the environment.

2. Reporting Timeframes and Other Requirements

After a permittee becomes aware of an occurrence that must be reported, he shall contact the appropriate Division regional office within the timeframes and in accordance with the other requirements listed below. Occurrences outside normal business hours may also be reported to the Department's Environmental Emergency Center personnel at (800) 858-0368.

Occurrence	Reporting Timeframes (After Discovery) and Other Requirements
(a) Visible sediment deposition in a stream or wetland	• ***Within 24 hours***, an oral or electronic notification. • ***Within 7 calendar days***, a report that contains a description of the sediment and actions taken to address the cause of the deposition. Division staff may waive the requirement for a written report on a case-by-case basis. • If the stream is named on the NC 303(d) list as impaired for sediment-related causes, the permittee may be required to perform additional monitoring, inspections or apply more stringent practices if staff determine that additional requirements are needed to assure compliance with the federal or state impaired-waters conditions.
(b) Oil spills and release of hazardous substances per Item 1(b)-(c) above	• ***Within 24 hours***, an oral or electronic notification. The notification shall include information about the date, time, nature, volume and location of the spill or release.
(c) Anticipated bypasses [40 CFR 122.41(m)(3)]	• ***A report at least ten days before the date of the bypass, if possible***. The report shall include an evaluation of the anticipated quality and effect of the bypass.
(d) Unanticipated bypasses [40 CFR 122.41(m)(3)]	• ***Within 24 hours***, an oral or electronic notification. • ***Within 7 calendar days,*** a report that includes an evaluation of the quality and effect of the bypass.
(e) Noncompliance with the conditions of this permit that may endanger health or the environment[40 CFR 122.41(l)(7)]	• ***Within 24 hours***, an oral or electronic notification. • ***Within 7 calendar days***, a report that contains a description of the noncompliance, and its causes; the period of noncompliance, including exact dates and times, and if the noncompliance has not been corrected, the anticipated time noncompliance is expected to continue; and steps taken or planned to reduce, eliminate, and prevent reoccurrence of the noncompliance. [40 CFR 122.41(l)(6). • Division staff may waive the requirement for a written report on a case-by-case basis.

PART II, SECTION G, ITEM (4)
DRAW DOWN OF SEDIMENT BASINS FOR MAINTENANCE OR CLOSE OUT

Sediment basins and traps that receive runoff from drainage areas of one acre or more shall use outlet structures that withdraw water from the surface when these devices need to be drawn down for maintenance or close out unless this is infeasible. The circumstances in which it is not feasible to withdraw water from the surface shall be rare (for example, times with extended cold weather). Non-surface withdrawals from sediment basins shall be allowed only when all of the following criteria have been met:

(a) The E&SC plan authority has been provided with documentation of the non-surface withdrawal and the specific time periods or conditions in which it will occur. The non-surface withdrawal shall not commence until the E&SC plan authority has approved these items,
(b) The non-surface withdrawal has been reported as an anticipated bypass in accordance with Part III, Section C, Item (2)(c) and (d) of this permit,
(c) Dewatering discharges are treated with controls to minimize discharges of pollutants from stormwater that is removed from the sediment basin. Examples of appropriate controls include properly sited, designed and maintained dewatering tanks, weir tanks, and filtration systems,
(d) Vegetated, upland areas of the sites or a properly designed stone pad is used to the extent feasible at the outlet of the dewatering treatment devices described in Item (c) above,
(e) Velocity dissipation devices such as check dams, sediment traps, and riprap are provided at the discharge points of all dewatering devices, and
(f) Sediment removed from the dewatering treatment devices described in Item (c) above is disposed of in a manner that does not cause deposition of sediment into waters of the United States.

NCG01 SELF-INSPECTION, RECORDKEEPING AND REPORTING | EFFECTIVE: 04/01/19

M:\Projects\AWH\AWH-20000\04-Production\Engineering\CD PKG 3\Current Drawing\AWH20000-CD-PKG-03-EC4.dwg, 11/16/2023 12:09:40 AM, Ashley Abbott

FINAL DRAWING - NOT RELEASED FOR CONSTRUCTION

McADAMS
The John R. McAdams Company, Inc.
2905 Meridian Parkway
Durham, NC 27713

phone 919. 361. 5000
fax 919. 361. 2269
license number: C-0293, C-187

www.mcadamsco.com

CLIENT

ASHTON RALEIGH RESIDENTIAL, LLC.
900 RIDGEFIELD DRIVE, SUITE 335
RALEIGH, NORTH CAROLINA 27609
PHONE: 919. 422. 7663
CONTACT: BOB MISHLER

ASHTON WOODS

THE POINT
PHASES 8 AND 14
CONSTRUCTION DRAWINGS - PACKAGE 3
EAST YOUNG STREET
TOWN OF ROLESVILLE, WAKE FOREST TOWNSHIP, WAKE COUNTY, NORTH CAROLINA

CD XX-XX

NORTH CAROLINA PROFESSIONAL SEAL 22630 ENGINEER WILLIAM T. O'DANIEL

REVISIONS

NO. DATE

PLAN INFORMATION

PROJECT NO.	AWH-20000
FILENAME	AWH20000-CD-PKG-02-EC4
CHECKED BY	.
DRAWN BY	.
SCALE	N.T.S.
DATE	11. 17. 2023

SHEET

EROSION CONTROL DETAILS

C6.04

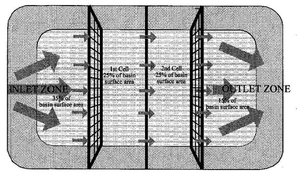

PLAN VIEW

CROSS SECTION

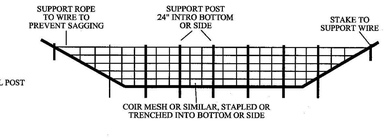

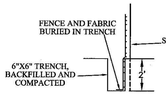

SECTION VIEW AT OPENING

NOTES:
1. BAFFLE MATERIAL SHOULD BE SECURED AT THE BOTTOM AND SIDES USING STAPLES OR BY TRENCHING AS FOR SILT FENCE.
2. MOST OF THE SEDIMENT WILL ACCUMULATE IN THE 1ST BAY, WHICH SHOULD BE READILY ACCESSIBLE FOR MAINTENANCE.
3. PROVIDE 3 BAFFLES (USE TWO IF LESS THAN 20 FEET IN LENGTH), PROVIDE 5 BAFFLES FOR DRAINAGE AREAS GREATER THAN 10 ACRES.
4. BAFFLE SHALL BE 700 G/M2 COIR EROSION BLANKET.
5. TOPS OF BAFFLES SHOULD BE 2 INCHES LOWER THAN THE TOP OF THE BERMS
6. INSPECT BAFFLES FOR REPAIR ONCE A WEEK AND AFTER EACH RAINFALL

WAKE COUNTY NORTH CAROLINA
EFFECTIVE: 01/31/08

STANDARD BAFFLES DETAIL

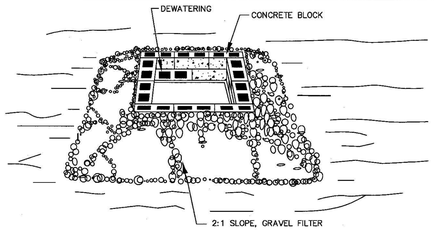

CONSTRUCTION SPECIFICATIONS

1. LAY ONE BLOCK ON EACH SIDE OF THE STRUCTURE ON ITS SIDE IN THE BOTTOM ROW TO ALLOW POOL DRAINAGE. THE FOUNDATION SHOULD BE EXCAVATED AT LEAST 2 INCHES BELOW THE CREST OF THE STORM DRAIN. PLACE THE BOTTOM ROW OF BLOCKS AGAINST THE EDGE OF THE STORM DRAIN FOR LATERAL SUPPORT AND TO AVOID WASHOUTS WHEN OVERFLOW OCCURS. IF NEEDED, GIVE LATERAL SUPPORT TO SUBSEQUENT ROWS BY PLACING 2x4 WOOD STUDS THROUGH BLOCK OPENINGS.
2. CAREFULLY FIT HARDWARE CLOTH OR COMPARABLE WIRE MESH WITH 1/2 INCH OPENINGS OVER ALL BLOCK OPENINGS TO HOLD GRAVEL IN PLACE.
3. USE CLEAN GRAVEL, 3/4 TO 1/2 INCH IN DIAMETER, PLACED 2 INCHES BELOW THE TOP OF THE BLOCK ON A 2:1 SLOPE OR FLATTER AND SMOOTH IT TO AN EVEN GRADE. DOT #57 WASHED STONE IS RECOMMENDED.

MAINTENANCE: INSPECT INLET PROTECTION AND REMOVE SEDIMENT AFTER EACH RAIN EVENT. GRAVEL SHOULD BE REPLACED AND REPAIRS MADE AS NEEDED.

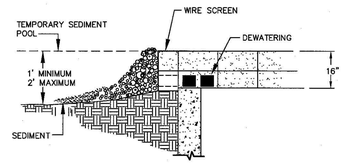

WAKE COUNTY NORTH CAROLINA
EFFECTIVE: 01/31/08

STANDARD BLOCK & GRAVEL DROP INLET PROTECTION

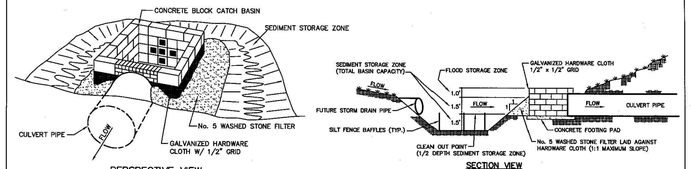

PERSPECTIVE VIEW

SECTION VIEW

USE OF CATCH BASIN RISER/FILTER ON FILL SITES

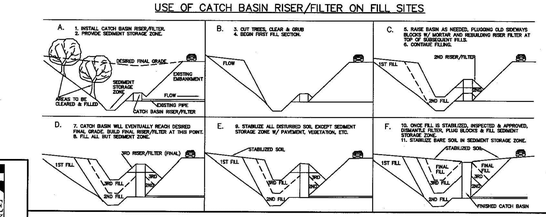

WAKE COUNTY NORTH CAROLINA
EFFECTIVE: 01/31/08

STANDARD CATCH BASIN RISER/FILTER

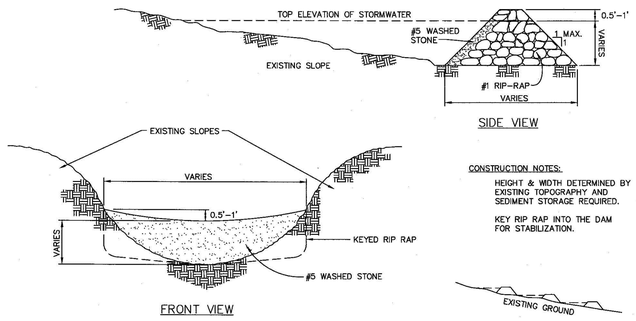

SIDE VIEW

FRONT VIEW

CONSTRUCTION NOTES:

HEIGHT & WIDTH DETERMINED BY EXISTING TOPOGRAPHY AND SEDIMENT STORAGE REQUIRED.

KEY RIP RAP INTO THE DAM FOR STABILIZATION.

STEP SEQUENCE

NOTE: REMOVE SEDIMENT ACCUMULATION FROM BEHIND CHECK DAMS TO PREVENT DAMAGE TO CHANNEL VEGETATION. FLOW SHOULD BE MAINTAINED THROUGH THE DAM.

WAKE COUNTY NORTH CAROLINA
EFFECTIVE: 01/31/08

STANDARD CHECK DAM

NOTES:

1. DIVERSION TO BE USED UPSLOPE OF A CONSTRUCTION SITE TO PREVENT STORM RUNOFF FROM ENTERING THE DISTURBED AREA.
2. IMMEDIATELY LINE AND STABILIZE BEFORE ANY DOWNSLOPE GRADING BEGINS (STABILIZATION MUST OCCUR BEFORE ISSUANCE OF A CERTIFICATE OF COMPLIANCE). STABILIZATION METHOD IS BASED ON VELOCITY OF OFFSITE DRAINAGE.
3. DIVERSIONS SHOULD ONLY BE USED FOR DRAINAGES 5 ACRES OR LESS.
4. ANY SEDIMENT LADEN WATER PRIOR TO STABILIZATION OF THE DIVERSION MUST BE DIVERTED INTO AN APPROVED EROSION AND SEDIMENT CONTROL BMP. CLEAN WATER SHOULD EMPTY INTO AN APPROVED OUTLET DEVICE.

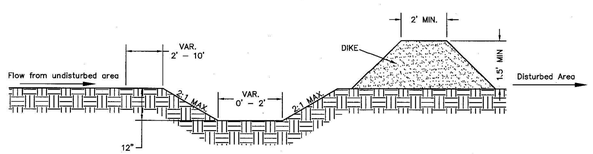

CROSS SECTIONAL VIEW

WAKE COUNTY NORTH CAROLINA
EFFECTIVE: 01/31/08

STANDARD CLEAN WATER DIVERSION

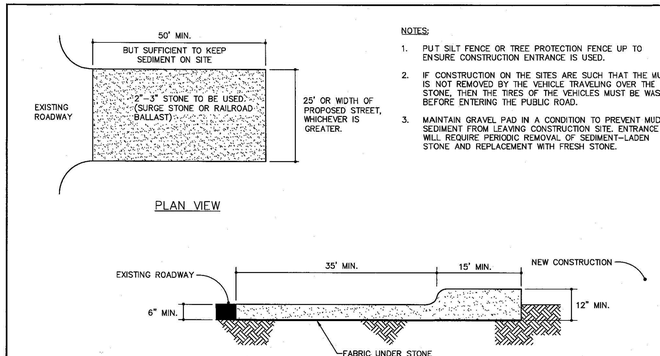

PLAN VIEW

NOTES:

1. PUT SILT FENCE OR TREE PROTECTION FENCE UP TO ENSURE CONSTRUCTION ENTRANCE IS USED.
2. IF CONSTRUCTION ON THE SITES ARE SUCH THAT THE MUD IS NOT REMOVED BY THE VEHICLE TRAVELING OVER THE STONE, THEN THE TIRES OF THE VEHICLES MUST BE WASHED BEFORE ENTERING THE PUBLIC ROAD.
3. MAINTAIN GRAVEL PAD IN A CONDITION TO PREVENT MUD OR SEDIMENT FROM LEAVING CONSTRUCTION SITE. ENTRANCE WILL REQUIRE PERIODIC REMOVAL OF SEDIMENT–LADEN STONE AND REPLACEMENT WITH FRESH STONE.

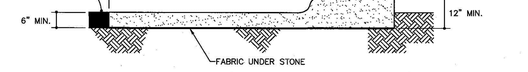

CROSS SECTION

WAKE COUNTY NORTH CAROLINA
EFFECTIVE: 01/31/08

STANDARD CONSTRUCTION ENTRANCE

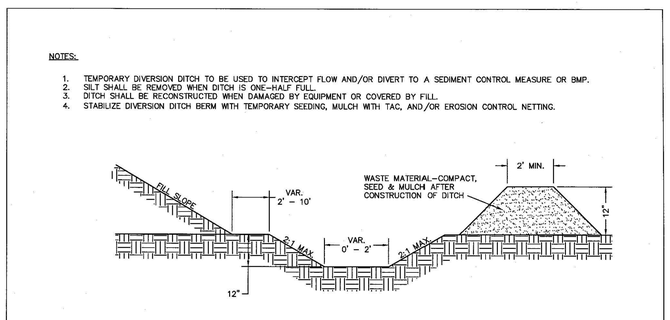

CROSS SECTIONAL VIEW

NOTES:

1. TEMPORARY DIVERSION DITCH TO BE USED TO INTERCEPT FLOW AND/OR DIVERT TO A SEDIMENT CONTROL MEASURE OR BMP.
2. SILT SHALL BE REMOVED WHEN DITCH IS ONE–HALF FULL.
3. DITCH SHALL BE RECONSTRUCTED WHEN DAMAGED BY EQUIPMENT OR COVERED BY FILL.
4. STABILIZE DIVERSION DITCH BERM WITH TEMPORARY SEEDING, MULCH WITH TAC, AND/OR EROSION CONTROL NETTING.

WAKE COUNTY NORTH CAROLINA
EFFECTIVE: 01/31/08

STANDARD TEMPORARY DIVERSION DITCH

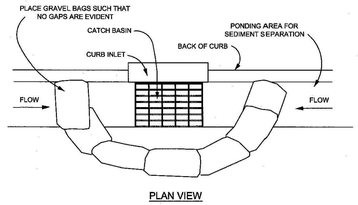

PLAN VIEW

NOTES:

1. PLACE GRAVEL BAG BARRIER ON GENTLY SLOPING STREET, WHERE WATER CAN POND AND ALLOW SEDIMENT TO SEPARATE FROM RUNNOFF.
2. USE SAND BAGS OF WOVEN GEOTEXTILE FABRIC (NOT BURLAP) AND FILL WITH $\frac{1}{2}$ INCH (OR SMALLER) GRAVEL. BAGS MUST BE LAYERED SUCH THAT NO GAPS ARE EVIDENT.
3. INSPECT BARRIERS AND REMOVE SEDIMENT AFTER EACH STORM EVENT, SEDIMENT AND GRAVEL MUST BE REMOVED FROM THE TRAVELED WAY IMMEDIATELY.
4. WHEN INSTALLING CURB INLET PROTECTION DEVICES, **NEVER** BLOCK THE CURB INLET.

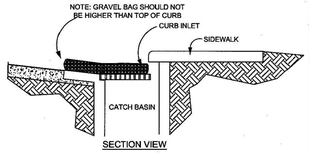

SECTION VIEW

WAKE COUNTY NORTH CAROLINA
EFFECTIVE: 01/31/08

STANDARD GRAVEL BAG CURB INLET PROTECTION

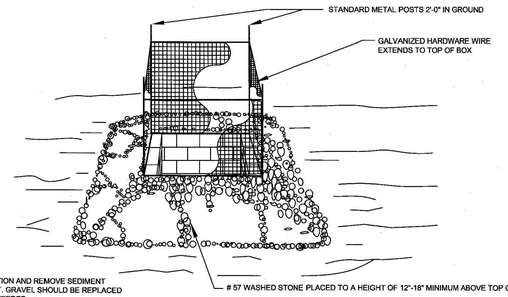

NOTE:

1. INSPECT INLET PROTECTION AND REMOVE SEDIMENT AFTER EACH RAIN EVENT. GRAVEL SHOULD BE REPLACED AND REPAIRS MADE AS NEEDED.

WAKE COUNTY NORTH CAROLINA
EFFECTIVE: 01/31/08

STANDARD GRAVEL YARD INLET PROTECTION

McADAMS
The John R. McAdams Company, Inc.
2905 Meridian Parkway
Durham, NC 27713

phone 919. 361. 5000
fax 919. 361. 2269
license number: C-0293, C-187

www.mcadamsco.com

CLIENT

ASHTON RALEIGH RESIDENTIAL, LLC.
900 RIDGEFIELD DRIVE, SUITE 335
RALEIGH, NORTH CAROLINA 27609
PHONE: 919. 422. 7663
CONTACT: BOB MISHLER

ASHTON WOODS

THE POINT
PHASES 8 AND 14
CONSTRUCTION DRAWINGS - PACKAGE 3
EAST YOUNG STREET
TOWN OF ROLESVILLE, WAKE FOREST TOWNSHIP, WAKE COUNTY, NORTH CAROLINA

CD XX-XX

NORTH CAROLINA PROFESSIONAL ENGINEER SEAL 22630 WILLIAM T. O'DANIEL
NOT FOR CONSTRUCTION

REVISIONS

NO.	DATE

PLAN INFORMATION

PROJECT NO.	AWH-20000
FILENAME	AWH20000-CD-PKG-02-EC4
CHECKED BY	.
DRAWN BY	.
SCALE	N.T.S.
DATE	11. 17. 2023

SHEET

EROSION CONTROL DETAILS

C6.05

M:\Projects\AWH\AWH-20000\04-Production\Engineering\CD PKG 3\Current Drawing\AWH20000-CD-Pkg-03-EC4.dwg, 11/16/2023 12:10:02 AM, Ashley Abbott

FINAL DRAWING - NOT RELEASED FOR CONSTRUCTION

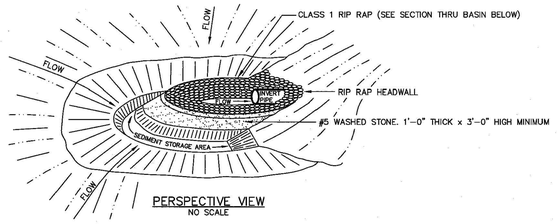

STANDARD HORSESHOE INLET PROTECTION

EFFECTIVE: 01/31/08

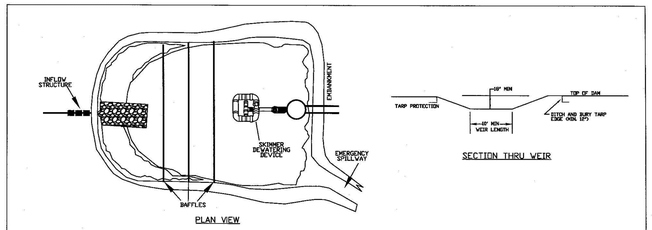

NOTES:
1) BASIN SHOULD BE CLEANED OUT WHEN CAPACITY REACHES AN ELEVATION REPRESENTING THAT THE BASIN IS HALF-FULL.
2) THE TARP USED TO PROTECT THE WEIR SHALL BE THE WIDTH SPECIFIED. THE LENGTH OF THE TARP SHALL BE ACCORDING TO AVAILABLE SUPPLY. IF MULTIPLE TARPS ARE TO BE USED, THEN TARPS SHALL BE OVERLAPPED AT LEAST 12". THE UPSTREAM 12" TARP SHALL OVERLAP THE DOWNSTREAM TARP. THE TARP SHALL BE 50 MIL. HEAVY DUTY SILVER TARPAULINS OR EQUIVALENT FOR U.V. RESISTANCE.
3) PROVIDE A MINIMUM OF THREE POROUS BAFFLES TO EVENLY DISTRIBUTE FLOW ACROSS THE BASIN, REDUCING TURBULENCE.
4) BAFFLE MATERIAL MUST BE SECURED AT THE BOTTOM AND SIDES USING STAPLES OR BY TRENCHING AS FOR A SILT FENCE.
5) MOST OF THE SEDIMENT WILL ACCUMULATE IN THE FIRST BAY, SO THIS SHOULD BE READILY AVAILABLE FOR MAINTENANCE.
6) DURING THE CONSTRUCTION PHASE OF THE PROJECT, PERMANENT STORMWATER RISER SHALL ONLY DEWATER FROM THE TOP OF PIPE.
7) POND SHALL NOT BE CONVERTED FOR STORMWATER USE UNTIL APPROVED BY ENVIRONMENTAL ENGINEER.

STANDARD SKIMMER ATTACHED TO PERMANENT RISER

EFFECTIVE: 01/31/08

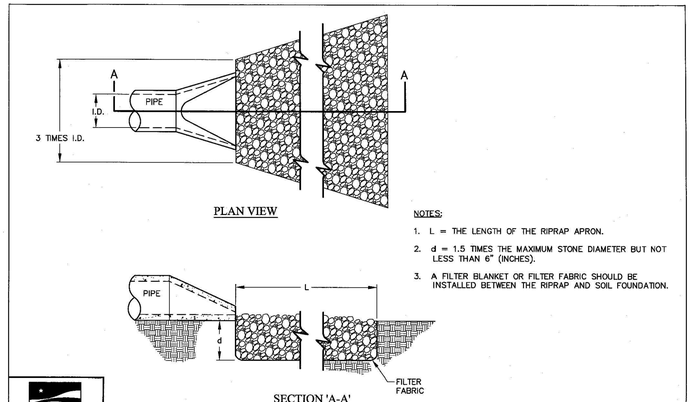

NOTES:
1. L = THE LENGTH OF THE RIPRAP APRON.
2. d = 1.5 TIMES THE MAXIMUM STONE DIAMETER BUT NOT LESS THAN 6" (INCHES).
3. A FILTER BLANKET OR FILTER FABRIC SHOULD BE INSTALLED BETWEEN THE RIPRAP AND SOIL FOUNDATION.

STANDARD PIPE OUTLET TO FLAT AREA
NO WELL-DEFINED CHANNEL

EFFECTIVE: 01/31/08

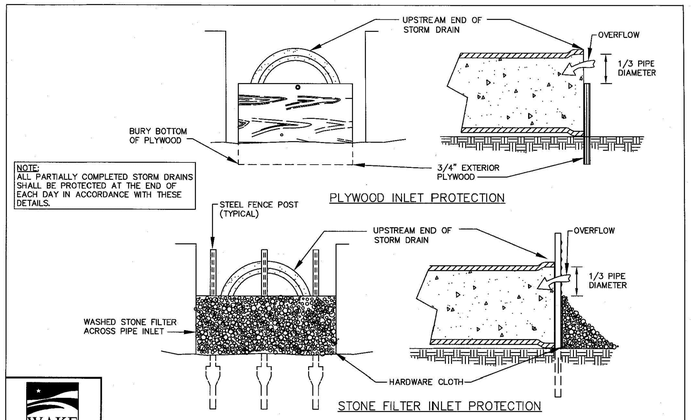

NOTE:
ALL PARTIALLY COMPLETED STORM DRAINS SHALL BE PROTECTED AT THE END OF EACH DAY IN ACCORDANCE WITH THESE DETAILS.

STANDARD PIPE INLET PROTECTION (PLYWOOD & STONE)

EFFECTIVE: 01/31/08

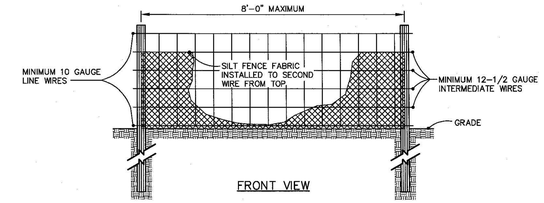

NOTE:
1. USE SILT FENCE ONLY WHEN DRAINAGE AREA DOES NOT EXCEED 1/4 ACRE AND NEVER IN AREAS OF CONCENTRATED FLOW.
2. REMOVE SEDIMENT DEPOSITED AS NEEDED TO PROVIDE STORAGE VOLUME FOR THE NEXT RAIN AND TO REMOVE PRESSURE ON THE SILT FENCE.

STANDARD TEMPORARY SILT FENCE

EFFECTIVE: 01/31/08

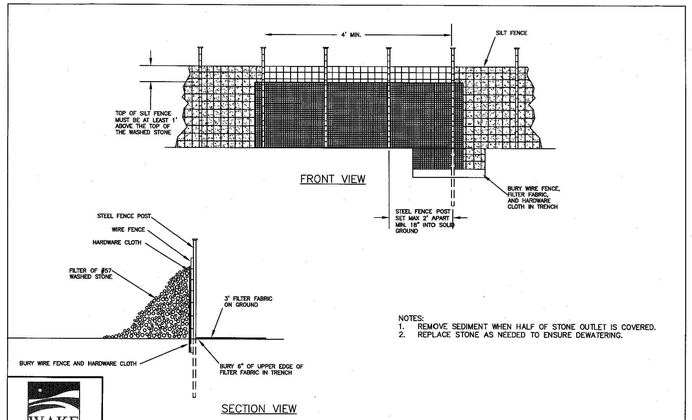

NOTES:
1. REMOVE SEDIMENT WHEN HALF OF STONE OUTLET IS COVERED.
2. REPLACE STONE AS NEEDED TO ENSURE DEWATERING.

STANDARD SILT FENCE OUTLET

EFFECTIVE: 01/31/08

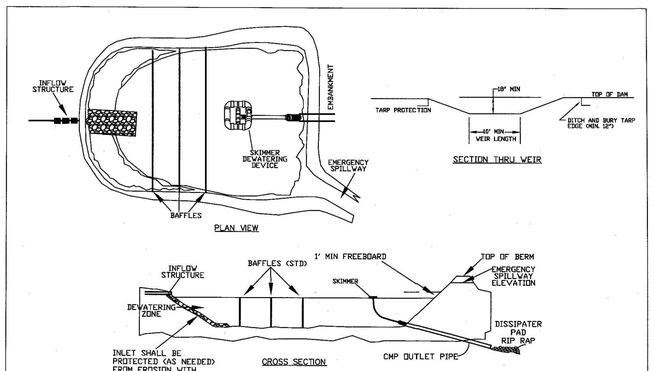

NOTES:
1) BASIN SHOULD BE CLEANED OUT WHEN CAPACITY REACHES AN ELEVATION REPRESENTING THAT THE BASIN IS HALF-FULL.
2) THE TARP USED TO PROTECT THE WEIR SHALL BE THE WIDTH SPECIFIED. THE LENGTH OF THE TARP SHALL BE ACCORDING TO AVAILABLE SUPPLY. IF MULTIPLE TARPS ARE TO BE USED, THEN TARPS SHALL BE OVERLAPPED AT LEAST 12". THE UPSTREAM 12" TARP SHALL OVERLAP THE DOWNSTREAM TARP. THE TARP SHALL BE 50 MIL. HEAVY DUTY SILVER TARPAULINS OR EQUIVALENT FOR U.V. RESISTANCE.
3) PROVIDE A MINIMUM OF THREE POROUS BAFFLES TO EVENLY DISTRIBUTE FLOW ACROSS THE BASIN, REDUCING TURBULENCE.
4) BAFFLE MATERIAL MUST BE SECURED AT THE BOTTOM AND SIDES USING STAPLES OR BY TRENCHING AS FOR A SILT FENCE.
5) MOST OF THE SEDIMENT WILL ACCUMULATE IN THE FIRST BAY, SO THIS SHOULD BE READILY AVAILABLE FOR MAINTENANCE.
6) DURING THE CONSTRUCTION PHASE OF THE PROJECT, PERMANENT STORMWATER RISER SHALL ONLY DEWATER FROM THE TOP OF PIPE.
7) POND SHALL NOT BE CONVERTED FOR STORMWATER USE UNTIL APPROVED BY ENVIRONMENTAL ENGINEER.

STANDARD SKIMMER BASIN

EFFECTIVE: 01/31/08

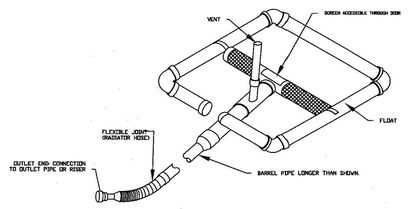

STANDARD SKIMMER DETAIL

EFFECTIVE: 01/31/08

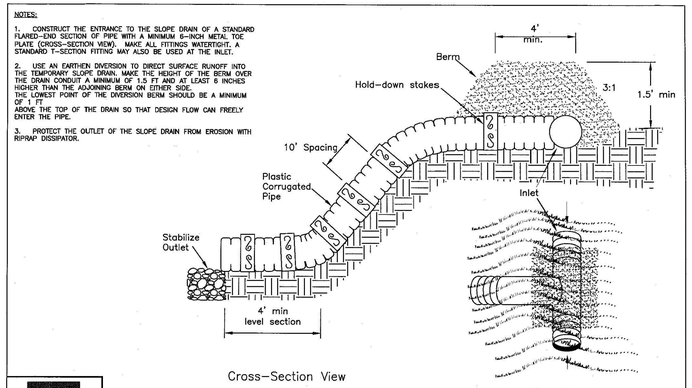

STANDARD TEMPORARY SLOPE DRAIN

EFFECTIVE: 01/31/08

McADAMS
The John R. McAdams Company, Inc.
2905 Meridian Parkway
Durham, NC 27713

phone 919. 361. 5000
fax 919. 361. 2269
license number: C-0293, C-187

www.mcadamsco.com

CLIENT

ASHTON RALEIGH RESIDENTIAL, LLC.
900 RIDGEFIELD DRIVE, SUITE 335
RALEIGH, NORTH CAROLINA 27609
PHONE: 919. 422. 7663
CONTACT: BOB MISHLER

ASHTON WOODS

THE POINT
PHASES 8 AND 14
CONSTRUCTION DRAWINGS - PACKAGE 3
EAST YOUNG STREET
TOWN OF ROLESVILLE, WAKE FOREST TOWNSHIP, WAKE COUNTY, NORTH CAROLINA

CD XX-XX

NORTH CAROLINA PROFESSIONAL SEAL 22630 ENGINEER WILLIAM T. O'DANIEL
NOT FOR CONSTRUCTION

REVISIONS

NO.	DATE

PLAN INFORMATION

PROJECT NO.	AWH-20000
FILENAME	AWH20000-CD-PKG-02-EC4
CHECKED BY	.
DRAWN BY	.
SCALE	N.T.S.
DATE	11. 17. 2023

SHEET

EROSION CONTROL DETAILS

C6.06

M:\Projects\AWH\AWH-20000\04-Production\Engineering\CD PKG 3\Current Drawings\AWH20000-CD-Pkg-03-EC4.dwg, 11/16/2023 12:10:22 AM, Ashley Abbott

FINAL DRAWING - NOT RELEASED FOR CONSTRUCTION

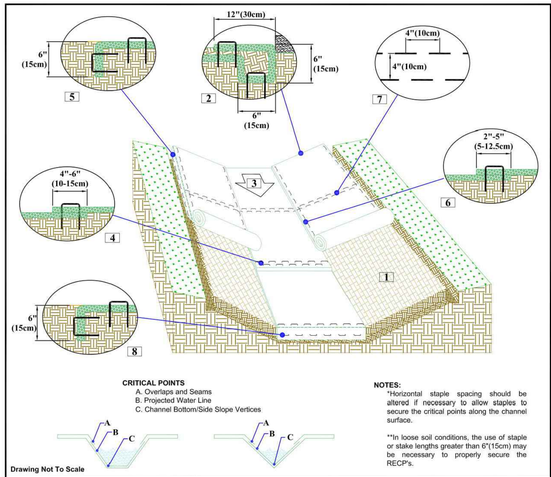

CRITICAL POINTS
A. Overlaps and Seams
B. Projected Water Line
C. Channel Bottom/Side Slope Vertices

NOTES:
"Horizontal staple spacing should be altered if necessary to allow staples to secure the critical points along the channel surface.

**In loose soil conditions, the use of staple or stake lengths greater than 6"(15cm) may be necessary to properly secure the RECP's.

Drawing Not To Scale

CHANNEL INSTALLATION DETAIL

1. Prepare soil before installing rolled erosion control products (RECPs), including any necessary application of lime, fertilizer, and seed.
2. Begin at the top of the channel by anchoring the RECPs in a 6"(15cm) deep X 6"(15cm) wide trench with approximately 12"(30cm) of RECPs extended beyond the up-slope portion of the trench. Use ShoreMax mat at the channel/culvert outlet as supplemental scour protection as needed. Anchor the RECPs with a row of staples/stakes approximately 12"(30cm) apart in the bottom of the trench. Backfill and compact the trench after stapling. Apply seed to the compacted soil and fold the remaining 12"(30cm) portion of RECPs back over the seed and compacted soil. Secure RECPs over compacted soil with a row of staples/stakes spaced approximately 12" apart across the width of the RECPs.
3. Roll center RECPs in direction of water flow in bottom of channel. RECPs will unroll with appropriate side against the soil surface. All RECPs must be securely fastened to soil surface by placing staples/stakes in appropriate locations as shown in the staple pattern guide.
4. Place consecutive RECPs end-over-end (Shingle style) with a 4"-6" overlap. Use a double row of staples staggered 4" apart and 4" on center to secure RECPs.
5. Full length edge of RECPs at top of side slopes must be anchored with a row of staples/stakes approximately 12"(30cm) apart in a 6"(15cm) deep X 6"(15cm) wide trench. Backfill and compact the trench after stapling.
6. Adjacent RECPs must be overlapped approximately 2"-5" (5-12.5cm) (Depending on RECPs type) and stapled.
7. In high flow channel applications a staple check slot is recommended at 30 to 40 foot (9 -12m) intervals. Use a double row of staples staggered 4"(10cm) apart and 4"(10cm) on center over entire width of the channel.
8. The terminal end of the RECPs must be anchored with a row of staples/stakes approximately 12" (30cm) apart in a 6"(15cm) deep X 6"(15cm) wide trench. Backfill and compact the trench after stapling.

NORTH AMERICAN GREEN
5401 St. Wendel - Cynthiana Rd. Poseyville, IN 47633
PH: 800-722-2040 www.nagreen.com

Disclaimer:
The information presented herein is general design information only. For specific applications, consult an independent professional for further design guidance.

Drawn on: 5-4-17

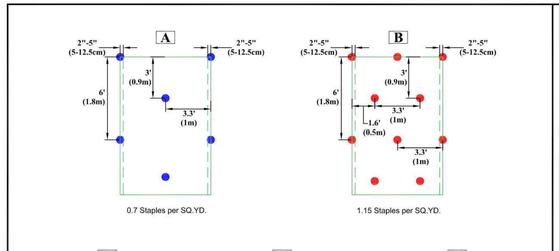

STAPLE PATTERN GUIDE

- 4:1 Slopes (A)
- 3:1 Slopes (B)
- 2:1 Slopes (C)
- 1:1 & Steeper Slopes (D)
- Medium/High Flow Channel (D)
- High Flow Channel And Shoreline (E)

NOTES:
* Use ECMDS® for more accurate staple pattern selection.

Drawing Not To Scale

NORTH AMERICAN GREEN
5401 St. Wendel - Cynthiana Rd. Poseyville, IN 47633
PH: 800-722-2040 www.nagreen.com

Disclaimer:
The information presented herein is general design information only. For specific applications, consult an independent professional for further design guidance.

Drawn on: 5-4-17

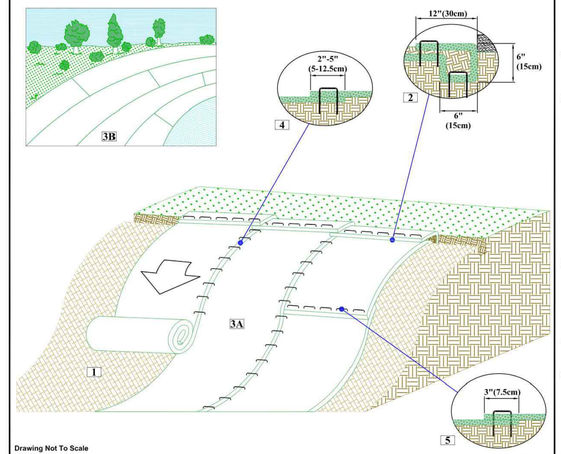

SLOPE INSTALLATION DETAIL

1. Prepare soil before installing rolled erosion control products (RECPs), including any necessary application of lime, fertilizer, and seed.
2. Begin at the top of the slope by anchoring the RECPs in a 6"(15cm) deep X 6"(15cm) wide trench with approximately 12" (30cm) of RECPs extended beyond the up-slope portion of the trench. Anchor the RECPs with a row of staples/stakes approximately 12" (30cm) apart in the bottom of the trench. Backfill and compact the trench after stapling. Apply seed to the compacted soil and fold the remaining 12"(30cm) portion of RECPs back over the seed and compacted soil. Secure RECPs over compacted soil with a row of staples/stakes spaced approximately 12"(30cm) apart across the width of the RECPs.
3. Roll the RECPs (A) down or (B) horizontally across the slope. RECPs will unroll with appropriate side against the soil surface. All RECPs must be securely fastened to soil surface by placing staples/stakes in appropriate locations as shown in the staple pattern guide.
4. The edges of parallel RECPs must be stapled with approximately 2" - 5" (5-12.5cm) overlap depending on the RECPs type.
5. Consecutive RECPs spliced down the slope must be end over end (Shingle style) with an approximate 3"(7.5cm) overlap. Staple through overlapped area, approximately 12"(30cm) apart across entire RECPs width.

*NOTE:
In loose soil conditions, the use of staple or stake lengths greater than 6"(15cm) may be necessary to properly secure the RECPs.

Drawing Not To Scale

NORTH AMERICAN GREEN
5401 St. Wendel - Cynthiana Rd. Poseyville, IN 47633
PH: 800-722-2040 www.nagreen.com

Disclaimer:
The information presented herein is general design information only. For specific applications, consult an independent professional for further design guidance.

Drawn on: 5-4-17

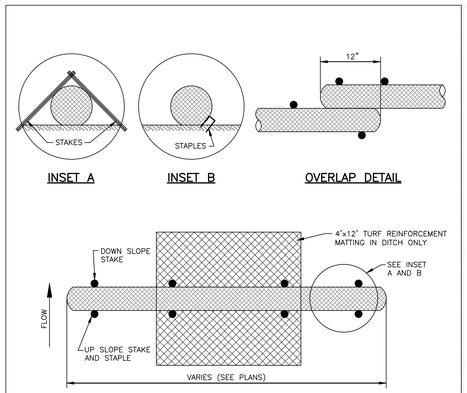

NOTES:
1. USE MINIMUM 12" DIAMETER WATTLE (LARGER WATTLES MAY BE REQUIRED TO KEEP SEDIMENT ON SITE).
2. USE 2" WOODEN STAKES WITH A 2" NOMINAL CROSS SECTION.
3. INSTALL A MINIMUM OF TWO UP SLOPE STAKES AND 4 DOWN SLOPE STAKES AT AN ANGLE TO WEDGE WATTLE TO EXISTING GRADE.
4. PROVIDE STAPLES OF 0.125" DIAMETER STEEL WIRE FORMED INTO A U SHAPE NOT LESS THAN 6" IN LENGTH.
5. INSTALL STAPLES APPROXIMATELY EVERY 1 LINEAR FOOT ON THE UP SLOPE SIDE OF THE WATTLE AND AT EACH END TO SECURE IT TO THE SOIL.

MAINTENANCE:
1. WATTLES SHOULD BE CHECKED AND CLEARED OF ACCUMULATED DEBRIS AND SEDIMENT.
2. REPLACE AS REQUIRED.

TEMPORARY WATTLE DETAIL

N.T.S.

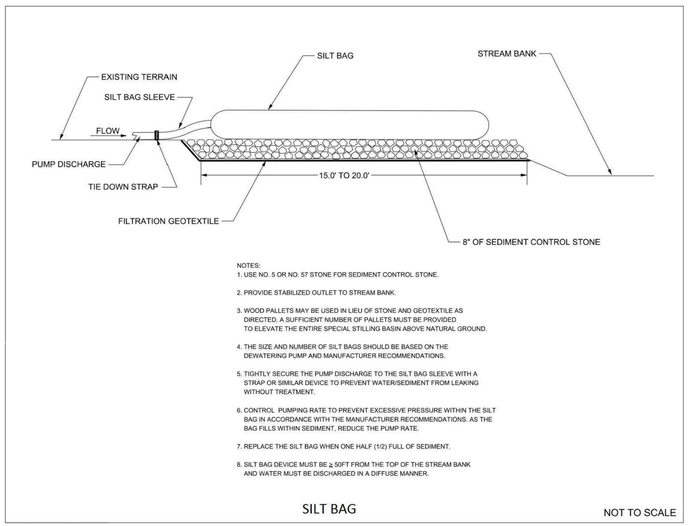

NOTES:
1. USE NO. 5 OR NO. 57 STONE FOR SEDIMENT CONTROL STONE.
2. PROVIDE STABILIZED OUTLET TO STREAM BANK.
3. WOOD PALLETS MAY BE USED IN LIEU OF STONE AND GEOTEXTILE AS DIRECTED. A SUFFICIENT NUMBER OF PALLETS MUST BE PROVIDED TO ELEVATE THE ENTIRE SPECIAL STILLING BASIN ABOVE NATURAL GROUND.
4. THE SIZE AND NUMBER OF SILT BAGS SHOULD BE BASED ON THE DEWATERING PUMP AND MANUFACTURER RECOMMENDATIONS.
5. TIGHTLY SECURE THE PUMP DISCHARGE TO THE SILT BAG SLEEVE WITH A STRAP OR SIMILAR DEVICE TO PREVENT WATER/SEDIMENT FROM LEAKING WITHOUT TREATMENT.
6. CONTROL PUMPING RATE TO PREVENT EXCESSIVE PRESSURE WITHIN THE SILT BAG IN ACCORDANCE WITH THE MANUFACTURER RECOMMENDATIONS. AS THE BAG FILLS WITHIN SEDIMENT, REDUCE THE PUMP RATE.
7. REPLACE THE SILT BAG WHEN ONE HALF (1/2) FULL OF SEDIMENT.
8. SILT BAG DEVICE MUST BE ≥ 50FT FROM THE TOP OF THE STREAM BANK AND WATER MUST BE DISCHARGED IN A DIFFUSE MANNER.

SILT BAG

NOT TO SCALE

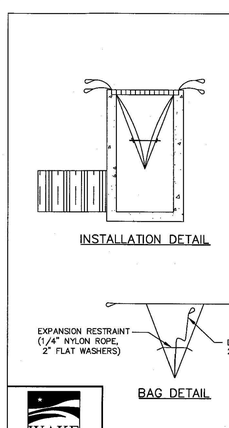

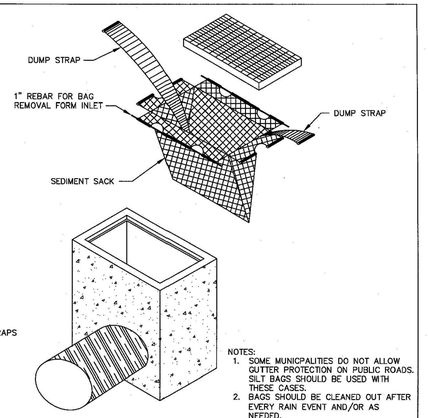

NOTES:
1. SOME MUNICPALITIES DO NOT ALLOW GUTTER PROTECTION ON PUBLIC ROADS. SILT BAGS SHOULD BE USED WITH THESE CASES.
2. BAGS SHOULD BE CLEANED OUT AFTER EVERY RAIN EVENT AND/OR AS NEEDED.

WAKE COUNTY NORTH CAROLINA
EFFECTIVE: 01/31/08

STANDARD SILT BAG - INLET SEDIMENT CONTROL DEVICE

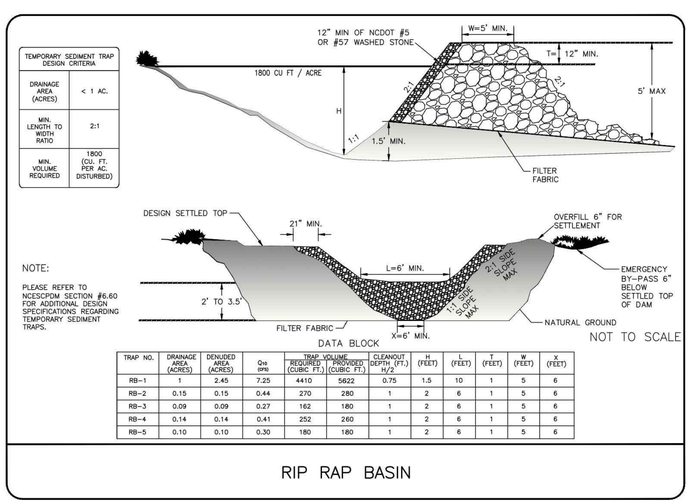

NOTE:
PLEASE REFER TO NCESCPOM SECTION #6.60 FOR ADDITIONAL DESIGN SPECIFICATIONS REGARDING TEMPORARY SEDIMENT TRAPS.

DATA BLOCK

TRAP NO.	DRAINAGE AREA (ACRES)	DENUDED AREA (ACRES)	Q10 (CFS)	TRAP VOLUME REQUIRED (CUBIC FT.)	TRAP VOLUME PROVIDED (CUBIC FT.)	CLEANOUT DEPTH (FT.) h/2	H (FEET)	L (FEET)	T (FEET)	W (FEET)	Y (FEET)
RB-1	1	2.45	7.25	4410	5622	0.75	1.5	10	1	5	6
RB-2	0.15	0.15	0.44	270	280	1	2	6	1	5	6
RB-3	0.09	0.09	0.27	162	180	1	2	6	1	5	6
RB-4	0.14	0.14	0.41	252	260	1	2	6	1	5	6
RB-5	0.10	0.10	0.30	180	180	1	2	6	1	5	6

RIP RAP BASIN

NOT TO SCALE

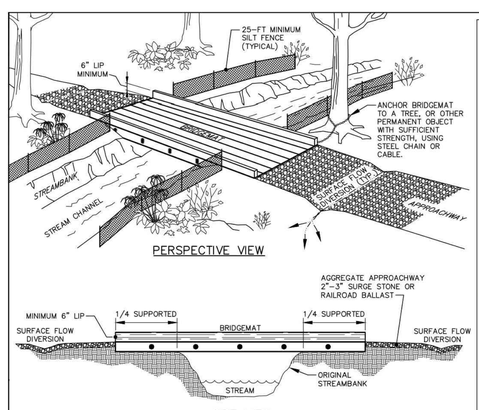

INSTALLATION NOTES:
1. REFER TO "NORTH CAROLINA DIVISION OF FOREST RESOURCES" LITERATURE, INSTALLATION MAINTENANCE GUIDELINES, & "NORTH CAROLINA FORESTRY BMP MANUAL–2006".
2. INSTALL WATER DIVERSION DEVICES (WATER BARS, TURNOUTS, BROAD–BASED DIPS, ETC.) ON BOTH SIDES OF THE MATS.
3. STABILIZE EXPOSED MINERAL SOIL WITH TREE TOPS OR BRUSH DURING MAT INSTALLATION, AND SEEDING/MULCH AFTER MAT REMOVAL.
4. INSTALL MATS TO CREATE A MINIMUM TEN FOOT BRIDGE WIDTH.
5. INCLUDE COARSE AGGREGATE ON THE APPROACHWAY FOR A MINIMUM OF 25 FEET AND SILT FENCE ALONG STREAMBANKS ADJACENT TO CROSSING FOR A MINIMUM OF 25 FEET.

MAINTENANCE NOTES:
1. KEEP MATS' SURFACE FREE OF MINERAL SOIL AND DEBRIS THAT COULD ENTER STREAM.
2. PERIODICALLY CHECK MAT HARDWARE; RETIGHTEN NUTS & CABLE CLAMPS AS NECESSARY TO MAINTAIN BRIDGE STRENGTH AND INTEGRITY.
3. IMMEDIATELY REMOVE ANY DEBRIS WHICH ENTERS THE STREAM AT THE CROSSING LOCATION.

REMOVAL NOTES:
1. CLEAN OFF BRIDGE SURFACE.
2. REMOVE MATS BY USING MAT CABLE LOOP OR SKIDDER GRAPPLE.
3. PERMANENTLY STABILIZE DISTURBED PORTIONS OF STREAMBANK AND APPROACH ROADS WITH PERENNIAL GRASSES,/MULCH (OR WETLAND MIX WHEN APPLICABLE).
4. LEAVE APPROPRIATE WATER DIVERSION STRUCTURES IN PLACE ON BOTH SIDES OF STREAM.
5. RESTORE THE STREAM CHANNEL TO ITS ORIGINAL CROSS–SECTION, AND SMOOTH AND APPROPRIATELY STABILIZE ALL DISTURBED AREAS.

STANDARD TEMPORARY STREAM CROSSING OPTION

FINAL DRAWING - NOT RELEASED FOR CONSTRUCTION

McADAMS
The John R. McAdams Company, Inc.
2905 Meridian Parkway
Durham, NC 27713

phone 919. 361. 5000
fax 919. 361. 2269
license number: C-0293, C-187

www.mcadamsco.com

CLIENT

ASHTON RALEIGH RESIDENTIAL, LLC.
900 RIDGEFIELD DRIVE, SUITE 335
RALEIGH, NORTH CAROLINA 27609
PHONE: 919. 422. 7663
CONTACT: BOB MISHLER

ASHTON WOODS

THE POINT
PHASES 8 AND 14
CONSTRUCTION DRAWINGS - PACKAGE 3
EAST YOUNG STREET
TOWN OF ROLESVILLE, WAKE FOREST TOWNSHIP, WAKE COUNTY, NORTH CAROLINA

CD XX-XX

NORTH CAROLINA PROFESSIONAL SEAL 22630 ENGINEER WILLIAM T. O'DANIEL
NOT FOR CONSTRUCTION

REVISIONS

NO.	DATE

PLAN INFORMATION

PROJECT NO.	AWH-20000
FILENAME	AWH20000-CD-PKG-02-EC4
CHECKED BY	.
DRAWN BY	.
SCALE	N.T.S.
DATE	11. 17. 2023

SHEET

EROSION CONTROL DETAILS

C6.07

M:\Projects\AWH\AWH-20000\04-Production\Engineering\CD PKG 3\Current Drawings\AWH20000-CD-Pkg-03-EC4.dwg, 11/16/2023 12:10:35 AM, Ashley Abbott

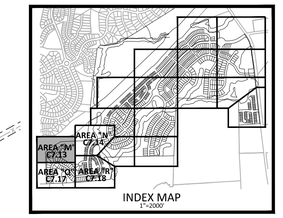

INDEX MAP
1"=2000'

30" VALLEY GUTTER WILL BE USED IN FRONT OF ALL FRONT LOADED SINGLE FAMILY LOTS AND TOWNHOME LOTS.

(SE) STORM DRAINAGE EASEMENT

EXISTING LOUISBURG ROAD (HWY 401) (VARIABLE WIDTH PUBLIC R/W)

EXISTING RIGHT-OF-WAY

N60° 44' 26"E 304.37'

N48° 45' 51"E 219.22'

N87° 33' 48"E 469.05'

OWNER: NC DEPARTMENT OF TRANSPORTATION
PIN: 1758930801
REID: 036234
D.B.: 013667, PG. 00509
ACREAGE: 3.96
ZONING: R&PUD
(ASHTON WOODS ACQUIRING PARCEL FROM NCDOT)

OWNER: QUAD TRI LLC OLIVE, MARTHA
PIN: 1758726794
REID: 0052027
D.B.: 016161, PG. 01089
ACREAGE: 12.84
ZONING: R-1

30' TOWN OF ROLESVILLE PUBLIC GREENWAY EASEMENT

10' ASPHALT GREENWAY

100' TYPE B LANDSCAPE BUFFER

25' TYPE B LANDSCAPE BUFFER

OS-5

MARROW COURT (50' PUBLIC R/W)

REVERIE WAY (50' PUBLIC R/W)

RETAINING WALL (DESIGN BY OTHERS)

781 8981 SF.
780 4864 SF.
782 7375 SF.
779 5705 SF.
778 6000 SF.
777 6139 SF.
776 7272 SF.
775 7698 SF.
774 9413 SF.
773 13400 SF.
772 12990 SF.
771 14713 SF.
770 9531 SF.
783 8091 SF.
784 7176 SF.
785 7050 SF.
786 7200 SF.
787 7200 SF.
788 6000 SF.
789 6422 SF.

SEE SHEET C7.14

SEE SHEET C7.17

PAVEMENT MARKING LEGEND

- (A) 24" WIDE STOP BAR
- (B) 8' WIDE STANDARD CROSSWALK (8" WHITE LINE)
- (C) 24"x36" YIELD LINE SYMBOLS
- (D) WHITE WIDE (12") 3'-3'/SP MINI-SKIPS ENTRANCE LINE
- (E) 8' WIDE HIGH VISIBILITY CROSSWALK

NOTE:
ALL PAVEMENT MARKINGS SHALL BE THERMOPLASTIC AND ARE TO BE PLACED PER NCDOT STANDARDS (REFERENCE NCDOT DETAILS (1205.01-1205.12)

1. STOP SIGN (MUTCD R1-1)
2. SPEED LIMIT (25) (MUTCD R2-1)
3. END OF ROAD MARKER (MUTCD OM4-3)
4. YEILD SIGN (MUTCD R1-2)

GRAPHIC SCALE
0 20 40 80
1 inch = 40 ft.

McADAMS
The John R. McAdams Company, Inc.
2905 Meridian Parkway
Durham, NC 27713

phone 919. 361. 5000
fax 919. 361. 2269
license number: C-0293, C-187

www.mcadamsco.com

CLIENT

ASHTON RALEIGH RESIDENTIAL, LLC.
900 RIDGEFIELD DRIVE, SUITE 335
RALEIGH, NORTH CAROLINA 27609
PHONE: 919. 422. 7663
CONTACT: BOB MISHLER

ASHTON WOODS

THE POINT
PHASES 8 AND 14
CONSTRUCTION DRAWINGS - PACKAGE 3
EAST YOUNG STREET
TOWN OF ROLESVILLE, WAKE FOREST TOWNSHIP, WAKE COUNTY, NORTH CAROLINA

CD XX-XX

NORTH CAROLINA PROFESSIONAL SEAL 22630 ENGINEER WILLIAM T. O'DANIEL
NOT FOR CONSTRUCTION

REVISIONS

NO.	DATE

PLAN INFORMATION

PROJECT NO.	AWH-20000
FILENAME	AWH20000-CD-PKG-03-PM1
CHECKED BY	WTO
DRAWN BY	TKD
SCALE	1"=40'
DATE	12. 13. 2023

SHEET

PAVEMENT MARKING AND SIGNAGE PLAN AREA "M"

C7.13

M:\Projects\AWH\AWH-20000\04-Production\Engineering\CD PKG 3\Current Drawings\AWH20000-CD-Pkg-03-PM1.dwg, 12/13/2023 10:31:37 AM, Tommy Daboit

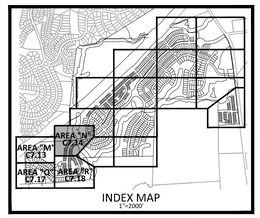

INDEX MAP
1"=2000'

30" VALLEY GUTTER WILL BE USED IN FRONT OF ALL FRONT LOADED SINGLE FAMILY LOTS AND TOWNHOME LOTS.

EXISTING LOUISBURG ROAD (HWY 401) (VARIABLE WIDTH PUBLIC R/W)

EXISTING RIGHT-OF-WAY

SD STORM DRAINAGE EASEMENT

STOP
1 STOP SIGN (MUTCD R1-1)

SPEED LIMIT 25
2 SPEED LIMIT (25) (MUTCD R2-1)

3 END OF ROAD MARKER (MUTCD OM4-3)

YIELD
4 YEILD SIGN (MUTCD R1-2)

PAVEMENT MARKING LEGEND

- (A) 24" WIDE STOP BAR
- (B) 8' WIDE STANDARD CROSSWALK (8" WHITE LINE)
- (C) 24"x36" YIELD LINE SYMBOLS
- (D) WHITE WIDE (12") 3'-3'/SP MINI-SKIPS ENTRANCE LINE
- (E) 8' WIDE HIGH VISIBILITY CROSSWALK (10' WIDE AT GREENWAY CROSSING)

NOTE:
ALL PAVEMENT MARKINGS SHALL BE THERMOPLASTIC AND ARE TO BE PLACED PER NCDOT STANDARDS (REFERENCE NCDOT DETAILS (1205.01-1205.12)

OWNER: NC DEPARTMENT OF TRANSPORTATION
PIN: 1758930801
REID: 0362134
D.B.: 013667, PG. 00509
ACREAGE: 3.96
ZONING: R&PUD
(ASHTON WOODS ACQUIRING PARCEL FROM NCDOT)

100' TYPE B LANDSCAPE BUFFER

10' ASPHALT GREENWAY

EXISTING 20' CITY OF RALEIGH SANITARY SEWER EASEMENT

PHASE 8

PHASE 5

ZONE 1

ZONE 2

50' NEUSE RIPARIAN BUFFER (MEASURED 50' FROM TOP OF BANK, EACH SIDE)

TOP OF BANK (TYP.)

STORMWATER CONTROL MEASURE "I" (WET POND)
OS-18

STORMWATER CONTROL MEASURE ACCESS AND MAINTENANCE EASEMENT

SOLACE WAY (50' PUBLIC R/W)

N09° 30' 43"E 535.11'

30' TOWN OF ROLESVILLE PUBLIC GREENWAY EASEMENT

OS-5

CONCRETE EXERCISE STATION

PROPOSED 40' CITY OF RALEIGH SANITARY SEWER EASEMENT

RETAINING WALL (DESIGN BY OTHERS)

40' STORM DRAINAGE EASEMENT

QUARRY ROAD (60' PUBLIC R/W)

OS-22

OS-23

OS-8

OS-7

OS-6

598 6250 SF.
597 7847 SF.
596 8487 SF.
594 6250 SF.
593 6250 SF.
595 6933 SF.
580 10023 SF.
581 6340 SF.
579 7432 SF.
578 7556 SF.
577 7506 SF.
575 7506 SF.
574 7558 SF.

668 2474 SF.
669 1910 SF.
670 1910 SF.
671 2474 SF.
672 2529 SF.
673 1922 SF.
674 1895 SF.
675 1895 SF.
676 1922 SF.
677 2529 SF.
678 2668 SF.
679 1997 SF.
680 1940 SF.
681 1911 SF.
682 1905 SF.
683 2424 SF.
684 2421 SF.
685 1902 SF.
686 1902 SF.
687 1902 SF.
624 2462 SF.
625 1993 SF.
626 2008 SF.
627 1993 SF.
628 2462 SF.
629 2506 SF.
630 2091 SF.
631 2161 SF.
632 2199 SF.
633 2208 SF.
634 2208 SF.
635 2811 SF.
636 3270 SF.
637 2239 SF.
638 2030 SF.
639 1884 SF.

REVERIE WAY (50' PUBLIC R/W)

CHARNT COURT (50' PUBLIC R/W)

HANDICAP SIGN (R7-8) WITH PENALTY SIGN (R7-8D) AND VAN ACCESSIBLE SIGN (R7-8P) (SEE DETAIL)
NOTE:"VAN" IS NOT INTENDED TO BE A MARKING, ONLY A PARKING TYPE DESIGNATOR

MAIL KIOSK AREA "4"

VAN

RETAINING WALL (DESIGN BY OTHERS)

N88° 08' 47"E 266.04'

PHASE 14

PHASE 8

10' ASPHALT GREENWAY

EXISTING 20' CITY OF RALEIGH SANITARY SEWER EASEMENT

20' TYPE B LANDSCAPE BUFFER

SEE SHEET C7.13

SEE SHEET C7.18

GRAPHIC SCALE
0 20 40 80
1 inch = 40 ft.

FINAL DRAWING - NOT RELEASED FOR CONSTRUCTION

M:\Projects\AWH\AWH-20000\04-Production\Engineering\CD PKG 3\Current Drawings\AWH-20000-CD Pkg-03-PM1.dwg, 12/13/2023 10:33:45 AM, Tommy Dalbolt

McADAMS
The John R. McAdams Company, Inc.
2905 Meridian Parkway
Durham, NC 27713

phone 919. 361. 5000
fax 919. 361. 2269
license number: C-0293, C-187

www.mcadamsco.com

CLIENT

ASHTON RALEIGH RESIDENTIAL, LLC.
900 RIDGEFIELD DRIVE, SUITE 335
RALEIGH, NORTH CAROLINA 27609
PHONE: 919. 422. 7663
CONTACT: BOB MISHLER

ASHTON WOODS

THE POINT
PHASES 8 AND 14
CONSTRUCTION DRAWINGS - PACKAGE 3
EAST YOUNG STREET
TOWN OF ROLESVILLE, WAKE FOREST TOWNSHIP, WAKE COUNTY, NORTH CAROLINA

CD XX-XX

NORTH CAROLINA PROFESSIONAL SEAL 22630 ENGINEER WILLIAM T. O'DANIEL — NOT FOR CONSTRUCTION

REVISIONS

NO. DATE

PLAN INFORMATION

PROJECT NO.	AWH-20000
FILENAME	AWH20000-CD-PKG-03-PM1
CHECKED BY	WTO
DRAWN BY	TKD
SCALE	1"=40'
DATE	12. 13. 2023

SHEET

PAVEMENT MARKING AND SIGNAGE PLAN AREA "N"

C7.14

SEE SHEET C7.13

PAVEMENT MARKING LEGEND

- (A) 24" WIDE STOP BAR
- (B) 8' WIDE STANDARD CROSSWALK (8" WHITE LINE)
- (C) 24"x36" YIELD LINE SYMBOLS
- (D) WHITE WIDE (12") 3'-3'/SP MINI-SKIPS ENTRANCE LINE
- (E) 8' WIDE HIGH VISIBILITY CROSSWALK

NOTE:
ALL PAVEMENT MARKINGS SHALL BE THERMOPLASTIC AND ARE TO BE PLACED PER NCDOT STANDARDS (REFERENCE NCDOT DETAILS (1205.01-1205.12)

MARROW COURT (50' PUBLIC R/W)

REVERIE WAY (50' PUBLIC R/W)

TROUPE WAY (50' PUBLIC R/W)

REVERIE WAY (50' PUBLIC R/W)

STORMWATER CONTROL MEASURE "L" (WET POND)

OS-4

OS-5

OS-32

OWNER: QUAD TRI LLC OLIVE, MARTHA
PIN: 1758726794
REID: 0052027
D.B.: 016161, PG. 01089
ACREAGE: 12.84
ZONING: R-1

OWNER: SCARBORO, EDWARD W JR. AND SPENCER
PIN: 1758712719
REID: 0077364
ACREAGE: 56.73
ZONING: R-1

OWNER: LILES FAMILY, LLC
PIN: 1758928330
REID: 0042125
D.B.: 009920, PG. 01879
ACREAGE: 79.28
ZONING: R-1

(3) END OF ROAD MARKERS WITH "FUTURE ROAD EXTENSION" ATTACHED TO CENTER MARKER

VARIABLE WIDTH TEMPORARY CONSTRUCTION EASEMENT (TYP.)

RETAINING WALL (DESIGN BY OTHERS)

25' TYPE B LANDSCAPE BUFFER

EXISTING PROPERTY LINE

TOP OF BANK (TYP.)

50' NEUSE RIPARIAN BUFFER (MEASURED 50' FROM TOP OF BANK, EACH SIDE)

STORMWATER CONTROL MEASURE ACCESS AND MAINTENANCE EASEMENT

ZONE 1

ZONE 2

S87° 42' 18"W 98.94'

S87° 34' 15"W 804.51'

PHASE 14

PHASE 8

PHASE 5

PHASE 14

SEE SHEET C7.18

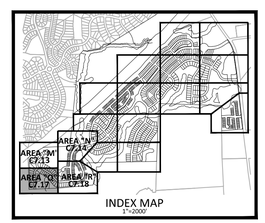

30" VALLEY GUTTER WILL BE USED IN FRONT OF ALL FRONT LOADED SINGLE FAMILY LOTS AND TOWNHOME LOTS.

(XX) STORM DRAINAGE EASEMENT

GRAPHIC SCALE
0 20 40 80
1 inch = 40 ft.

FINAL DRAWING - NOT RELEASED FOR CONSTRUCTION

McADAMS
The John R. McAdams Company, Inc.
2905 Meridian Parkway
Durham, NC 27713

phone 919. 361. 5000
fax 919. 361. 2269
license number: C-0293, C-187

www.mcadamsco.com

CLIENT

ASHTON RALEIGH RESIDENTIAL, LLC.
900 RIDGEFIELD DRIVE, SUITE 335
RALEIGH, NORTH CAROLINA 27609
PHONE: 919. 422. 7663
CONTACT: BOB MISHLER

ASHTON WOODS

THE POINT
PHASES 8 AND 14
CONSTRUCTION DRAWINGS - PACKAGE 3
EAST YOUNG STREET
TOWN OF ROLESVILLE, WAKE FOREST TOWNSHIP, WAKE COUNTY, NORTH CAROLINA

CD XX-XX

REVISIONS

NO.	DATE

PLAN INFORMATION

PROJECT NO.	AWH-20000
FILENAME	AWH20000-CD-PKG-03-PM1
CHECKED BY	WTO
DRAWN BY	TKD
SCALE	1"=40'
DATE	12. 13. 2023

SHEET

PAVEMENT MARKING AND SIGNAGE PLAN AREA "Q"

C7.17

M:\Projects\AWH\AWH-20000\04-Production\Engineering\CD PKG 3\Current Drawings\AWH20000-CD-Pkg-03-PM1.dwg, 12/13/2023 10:34:16 AM, Tommy Daboll

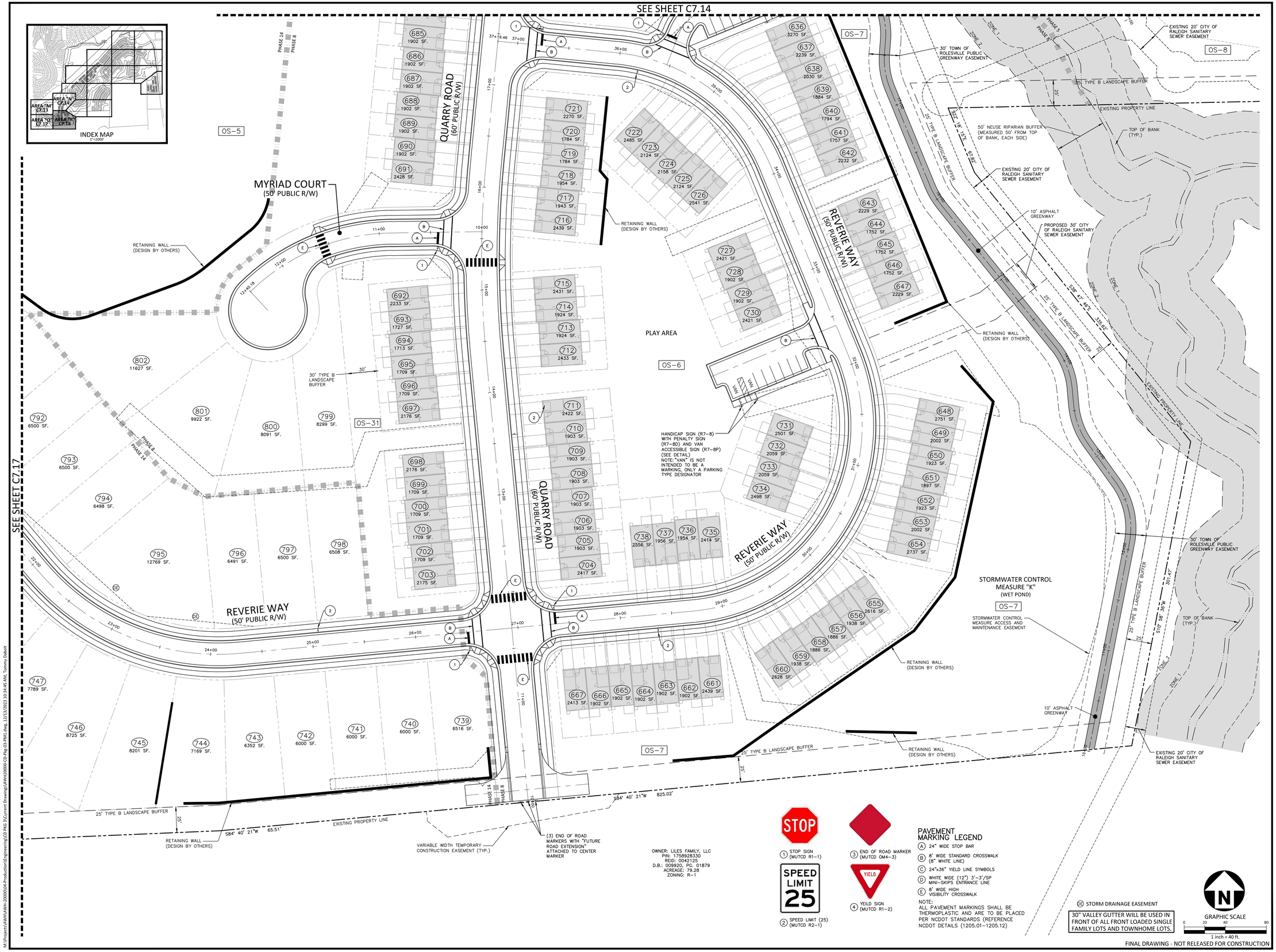

McADAMS
The John R. McAdams Company, Inc.
2905 Meridian Parkway
Durham, NC 27713

phone 919. 361. 5000
fax 919. 361. 2269
license number: C-0293, C-187

www.mcadamsco.com

CLIENT

ASHTON RALEIGH RESIDENTIAL, LLC.
900 RIDGEFIELD DRIVE, SUITE 335
RALEIGH, NORTH CAROLINA 27609
PHONE: 919. 422. 7663
CONTACT: BOB MISHLER

ASHTON WOODS

THE POINT
PHASES 8 AND 14
CONSTRUCTION DRAWINGS - PACKAGE 3
EAST YOUNG STREET
TOWN OF ROLESVILLE, WAKE FOREST TOWNSHIP, WAKE COUNTY, NORTH CAROLINA

CD XX-XX

NORTH CAROLINA PROFESSIONAL SEAL 22630 ENGINEER WILLIAM T. O'DANIEL
NOT FOR CONSTRUCTION

REVISIONS

NO.	DATE

PLAN INFORMATION

PROJECT NO.	AWH-20000
FILENAME	AWH20000-CD-PKG-03-PM1
CHECKED BY	WTO
DRAWN BY	TKD
SCALE	1"=40'
DATE	12. 13. 2023

SHEET

PAVEMENT MARKING AND SIGNAGE PLAN AREA "R"
C7.18

M:\Projects\AWH\AWH-20000\04-Production\Engineering\CD PKG 3\Current Drawings\AWH20000-CD-Pkg-03-PM1.dwg, 12/13/2023 10:34:45 AM, Tommy Dabolt

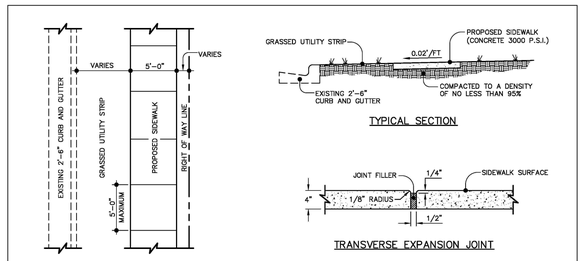

NOTES:

1. TRANSVERSE EXPANSION JOINTS TO BE A MAXIMUM OF 50 FEET.
2. ALL CONCRETE TO BE FINISHED WITH CURING COMPOUND.
3. A 6 INCH DEPTH IS REQUIRED AT LOCATIONS OF DRIVEWAY CROSSINGS, AT STREET INTERSECTIONS (ALONG THE LENGTH OF RADIUS CURB RETURNS), AND IN THE HANDICAP RAMPS.

STANDARD CONCRETE SIDEWALK

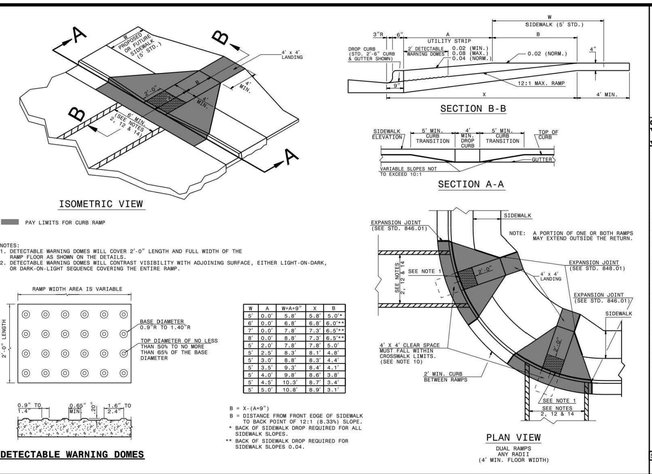

STATE OF NORTH CAROLINA
DEPT. OF TRANSPORTATION
DIVISION OF HIGHWAYS
RALEIGH, N.C.
1-18

ROADWAY STANDARD DRAWING FOR
CURB RAMP
PROPOSED CURB AND GUTTER

SHEET 1 OF 3
848.05

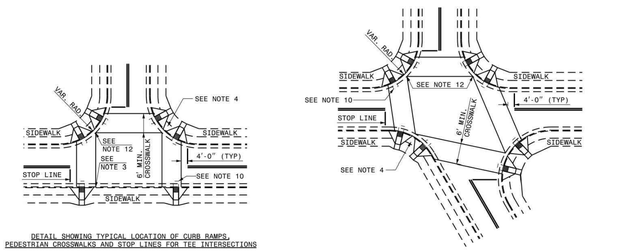

ROADWAY PLANS SYMBOL
CR
FOR PROPOSED CURB RAMP

PROPOSED CURB RAMP W/ LANDING
PROPOSED OR FUTURE SIDEWALK

ALLOWABLE LOCATIONS
DUAL RAMP RADII.....ANY

STATE OF NORTH CAROLINA
DEPT. OF TRANSPORTATION
DIVISION OF HIGHWAYS
RALEIGH, N.C.
1-18

ROADWAY STANDARD DRAWING FOR
CURB RAMP
PROPOSED CURB AND GUTTER

SHEET 2 OF 3
848.05

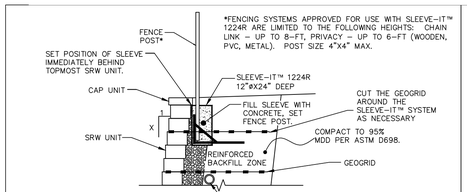

NOTES
1. WALLS WILL BE DESIGNED BY A STRUCTURAL ENGINEER.
2. WALL COLOR TO BE EARTH TONE OR GRAY.

INTERLOCKING BLOCK WALL WITH FENCE
(SLEEVE-IT™ OR APPROVED EQUAL)
N.T.S.

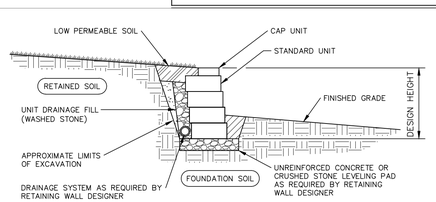

NOTES
1. WALLS WILL BE DESIGNED BY A STRUCTURAL ENGINEER.
2. WALL COLOR TO BE EARTH TONE OR GRAY.

INTERLOCKING BLOCK WALL
N.T.S.

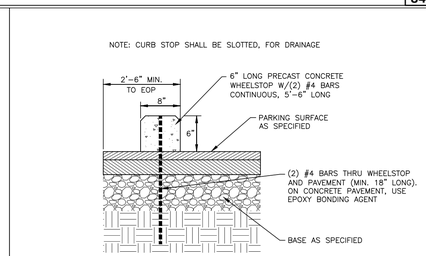

WHEEL STOP
N.T.S.

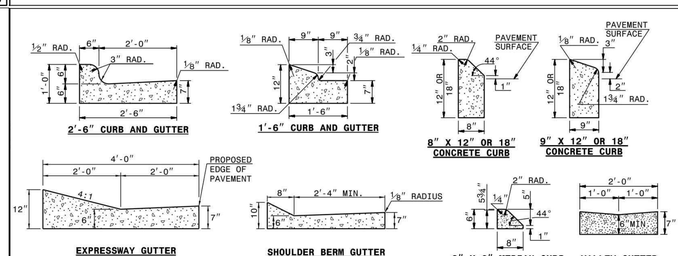

SECTION VIEW OF CURBS OR CURBS AND GUTTERS

GENERAL NOTES:
-PLACE CONTRACTION JOINTS AT 10' INTERVALS, EXCEPT THAT A 15' SPACING MAY BE USED WHEN A MACHINE IS USED OR WHEN SATISFACTORY SUPPORT FOR THE FACE FORM CAN BE OBTAINED WITHOUT THE USE OF TEMPLATES AT 10' INTERVALS.
-JOINT SPACING MAY BE ALTERED IF REQUIRED BY THE ENGINEER.
-CONTRACTION JOINTS MAY BE INSTALLED WITH THE USE OF TEMPLATES OR FORMED BY OTHER APPROVED METHODS.
CONSTRUCT NON-TEMPLATE FORMED JOINTS A MIN. OF 1½" DEEP.
-FILL ALL CONSTRUCTION JOINTS, EXCEPT IN 8"x6" MEDIAN CURB, WITH JOINT FILLER AND SEALER.
-SPACE EXPANSION JOINTS AT 90' INTERVALS AND ADJACENT TO ALL RIGID OBJECTS.

SECTION VIEW OF JOINTS

STATE OF NORTH CAROLINA
DEPT. OF TRANSPORTATION
DIVISION OF HIGHWAYS
RALEIGH, N.C.
1-18

ROADWAY STANDARD DRAWING FOR
CONCRETE CURB, GUTTER AND CURB & GUTTER

SHEET 1 OF 3
846.01

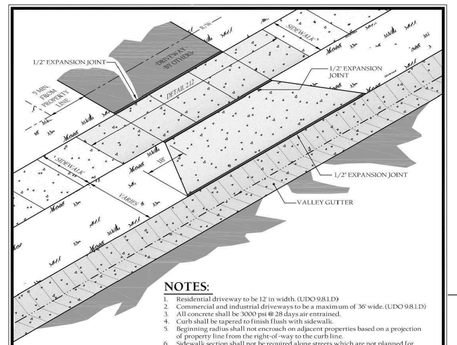

FLARED DRIVEWAY ENTRANCE TO VALLEY GUTTER

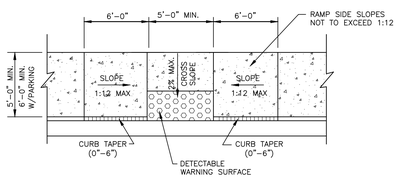

NOTE: RAMP LANDING AREA SHALL RECEIVE A 24" DETECTABLE WARNING SURFACE OF COLOR TO CONTRAST WITH ADJOINING SURFACES PER ICC A117.1-2009 SECT. 705 REQUIREMENTS.

ACCESSIBLE SIDEWALK RAMP
N.T.S.

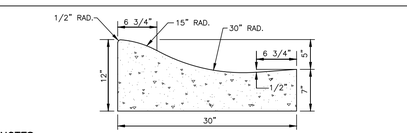

NOTES:
1. 10' MAXIMUM BETWEEN DUMMY JOINTS. 15' MAXIMUM BETWEEN DUMMY JOINTS ON MACHINE POURS.
2. 1/2" EXPANSION JOINT EVERY 50'.
3. 3000 PSI CONCRETE MINIMUM, 4" SLUMP MAXIMUM.
4. LIQUID MEMBRANE CURING COMPOUND SHALL MEET THE REQUIREMENTS OF SECTION 1026-2 OF NCDOT STANDARDS AND SPECIFICATIONS FOR ROADS AND STRUCTURES.
5. ALL CONSTRUCTION JOINTS SHALL BE FILLED WITH FILLER AND SEALER IN ACCORDANCE WITH NCDOT ROADWAY STANDARD DETAIL 846.01. THE JOINT MATERIAL SHALL CONFORM TO SECTION 1028-2 OF THE NCDOT STANDARDS AND SPECIFICATIONS FOR ROADS AND STRUCTURES.
6. REFER TO NCDOT DETAIL 846.01 FOR CURB AND GUTTER SUPERELEVATION RATES.

30" ROLLED CURB AND GUTTER
N.T.S.

NOTES:

1. CONSTRUCT THE RAMP SURFACE TO BE STABLE, FIRM, AND SLIP RESISTANT. CONSTRUCT THE CURB RAMP TYPE AS SHOWN IN THE PAVEMENT MARKING PLANS OR AS DIRECTED BY THE ENGINEER.
2. LOCATE CURB RAMPS AND PLACE PEDESTRIAN CROSSWALK MARKINGS AS SHOWN IN THE PAVEMENT MARKING PLANS. WHEN FIELD ADJUSTMENTS REQUIRE MOVING CURB RAMPS OR MARKINGS AS SHOWN, CONTACT THE SIGNING AND DELINEATION UNIT OR LOCATE AS DIRECTED BY THE ENGINEER.
3. COORDINATE THE CURB RAMP AND THE PEDESTRIAN CROSSWALK MARKINGS SO A 4'x4' CLEAR SPACE AT THE BASE OF THE CURB RAMP WILL FALL WITHIN THE PEDESTRIAN CROSSWALK LINES.
4. SET BACK DISTANCE FROM INSIDE CROSSWALK MARKING TO NEAREST EDGE OF TRAVEL LANE IS 4' MINIMUM.
5. REFER TO THE PAVEMENT MARKING PLANS FOR STOP BAR LOCATIONS AT SIGNALIZED INTERSECTIONS. IF A PAVEMENT MARKING PLAN IS NOT PROVIDED, CONTACT THE SIGNAL DESIGN SECTION FOR THE STOP BAR LOCATIONS OR LOCATE AS DIRECTED BY THE ENGINEER.
6. TERMINATE PARKING A MINIMUM OF 20' BACK OF A PEDESTRIAN CROSSWALK.
7. CONSTRUCT CURB RAMPS A MINIMUM OF 4' WIDE.
8. CONSTRUCT THE RUNNING SLOPE OF THE RAMP 8.33% MAXIMUM.
9. ALLOWABLE CROSS SLOPE ON SIDEWALKS AND CURB RAMPS WILL BE 2% MAXIMUM.
10. CONSTRUCT THE SIDE FLARE SLOPE A MAXIMUM OF 10% MEASURED ALONG THE CURB LINE.
11. CONSTRUCT THE COUNTER SLOPE OF THE GUTTER OR STREET AT THE BASE OF THE CURB RAMP A MAXIMUM OF 5% AND MAINTAIN A SMOOTH TRANSITION.
12. CONSTRUCT LANDINGS FOR SIDEWALK A MINIMUM OF 4'x4' WITH A MAXIMUM SLOPE OF 2% IN ANY DIRECTION. CONSTRUCT LANDINGS FOR MEDIAN ISLANDS A MINIMUM OF 5'x5' WITH A MAXIMUM SLOPE OF 2% IN ANY DIRECTION.
13. TO USE A MEDIAN ISLAND AS A PEDESTRIAN REFUGE AREA, MEDIAN ISLANDS WILL BE A MINIMUM OF 6' WIDE. CONSTRUCT MEDIAN ISLANDS TO PROVIDE PASSAGE OVER OR THROUGHT THE ISLAND.
14. SMALL CHANNELIZATION ISLANDS THAT CAN NOT PROVIDE A 5'X5' LANDING AT THE TOP OF A RAMPS, WILL BE CUT THROUGH LEVEL WITH THE SURFACE STREET.
15. CURB RAMPS WITH RETURNED CURBS MAY BE USED ONLY WHERE PEDESTRIANS WOULD NOT NORMALLY WALK ACROSS THE RAMP. THE ADJACENT SURFACE IS PLANTING OR OTHER NON-WALKING SURFACE OR THE SIDE APPROACH IS SUBSTANTIALLY OBSTRUCTED.
16. PLACE A ½" EXPANSION JOINT WHERE THE CONCRETE CURB RAMP JOINS THE CURB AS SHOWN IN ROADWAY STANDARD DRAWING 848.01
17. PLACE ALL PEDESTRIAN PUSH BUTTON ACTUATORS AND CROSSING SIGNALS AS SHOWN IN THE PLANS OR AS SHOWN IN THE MUTCD.
18. CURB RAMPS THROUGH MEDIAN ISLANDS, SINGLE RAMPS AT DUAL CROSSWALKS OR LIMITED R/W SITUATIONS, WILL BE HANDLED BY SPECIAL DETAILS. CONTACT THE CONTRACT STANDARDS AND DEVELOPMENT UNIT FOR THE DETAILS OR FOR A SPECIAL DESIGN.

STATE OF NORTH CAROLINA
DEPT. OF TRANSPORTATION
DIVISION OF HIGHWAYS
RALEIGH, N.C.
1-18

ROADWAY STANDARD DRAWING FOR
CURB RAMPS
NOTES

SHEET 3 OF 3
848.05

FINAL DRAWING - NOT RELEASED FOR CONSTRUCTION

McADAMS
The John R. McAdams Company, Inc.
2905 Meridian Parkway
Durham, NC 27713

phone 919. 361. 5000
fax 919. 361. 2269
license number: C-0293, C-187

www.mcadamsco.com

CLIENT

ASHTON RALEIGH RESIDENTIAL, LLC.
900 RIDGEFIELD DRIVE, SUITE 335
RALEIGH, NORTH CAROLINA 27609
PHONE: 919. 422. 7663
CONTACT: BOB MISHLER

ASHTON WOODS

THE POINT
PHASES 8 AND 14
CONSTRUCTION DRAWINGS - PACKAGE 3
EAST YOUNG STREET
TOWN OF ROLESVILLE, WAKE FOREST TOWNSHIP,
WAKE COUNTY, NORTH CAROLINA

CD XX-XX

NORTH CAROLINA PROFESSIONAL SEAL 22630 ENGINEER WILLIAM T. O'DANIEL
NOT FOR CONSTRUCTION

REVISIONS

NO.	DATE

PLAN INFORMATION

PROJECT NO.	AWH-20000
FILENAME	AWH20000-CD-PKG-03-D1
CHECKED BY	WTO
DRAWN BY	TKD
SCALE	N.T.S.
DATE	12. 13. 2023

SHEET

SITE DETAILS

C8.00

M:\Projects\AWH\AWH-20000\04-Production\Engineering\CD PKG 3\Current Drawings\AWH20000-CD-Pkg-03-D1.dwg, 12/13/2023 11:13:36 AM, Tommy Daboll

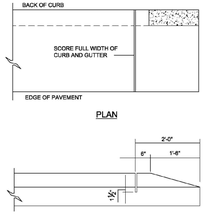

CITY OF RALEIGH
STANDARD DETAIL.

REVISIONS	DATE: 02/03/	NOT TO SCALE
	STANDARD METHOD OF ENDING CURB AND GUTTER	
	T-10.25	

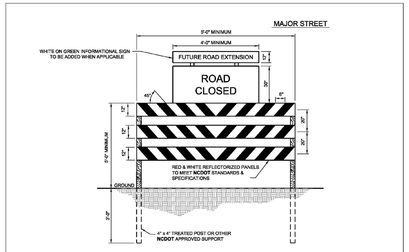

NOTES:
1. BARRICADE(S) TO BE ERECTED ACROSS ENTIRE ROADWAY INCLUDING CURB & GUTTER.
2. ADVANCE WARNING SIGN W1-4-1 (DEAD END) SHALL BE PLACED JUST AFTER LAST INTERSECTING STREET.
3. MARKINGS FOR BARRICADE RAILS SHALL BE REFLECTIVE AND ALTERNATE RED & WHITE STRIPS.
4. "ROAD CLOSED" SIGN SHALL MEET SPECIFICATIONS OF M.U.T.C.D. R11-2 AND BE REQUIRED ATOP EACH BARRICADE USED.
5. CALL 811 FOR UNDERGROUND UTILITY LOCATE PRIOR TO INSTALLATION.

CITY OF RALEIGH
STANDARD DETAIL.

REVISIONS	DATE: 02/03/	NOT TO SCALE
	TEMPORARY BARRICADE FOR DEAD END ROADS	
	T-10.28	

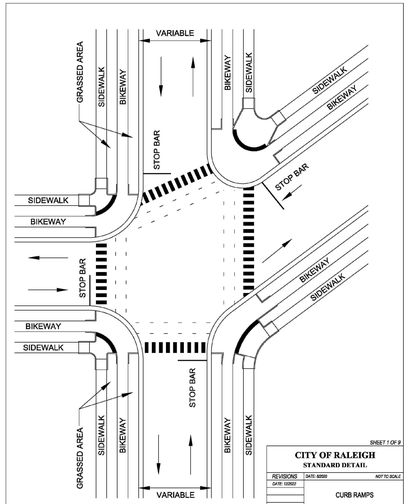

SHEET 1 OF 9

CITY OF RALEIGH
STANDARD DETAIL.

REVISIONS	DATE: 02/03/	NOT TO SCALE
	CURB RAMPS	
	T-20.01.1	

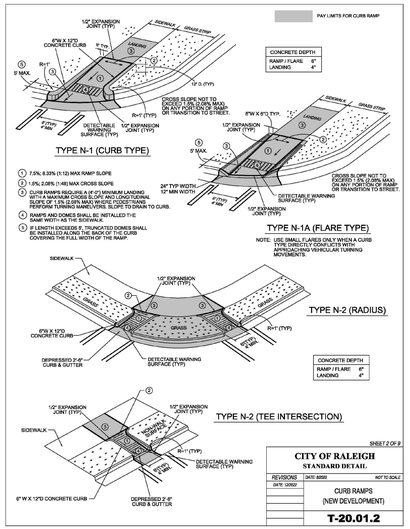

SHEET 2 OF 9

CITY OF RALEIGH
STANDARD DETAIL.

REVISIONS	DATE: 02/03/	NOT TO SCALE
DATE: 12/2022	CURB RAMPS (NEW DEVELOPMENT)	
	T-20.01.2	

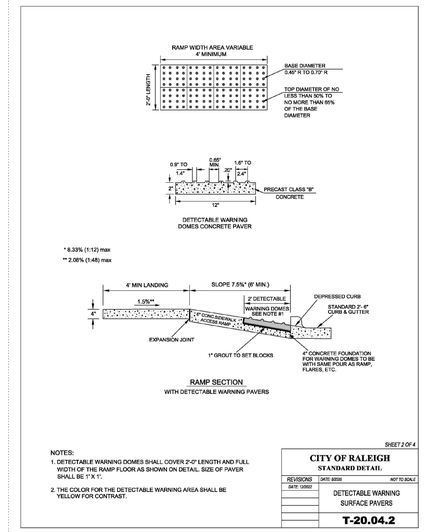

NOTES:
1. DETECTABLE WARNING DOMES SHALL COVER 2'-0" LENGTH AND FULL WIDTH OF THE RAMP FLOOR AS SHOWN ON DETAIL. SIZE OF PAVER SHALL BE 1" X 1".
2. THE COLOR FOR THE DETECTABLE WARNING AREA SHALL BE YELLOW FOR CONTRAST.

SHEET 2 OF 4

CITY OF RALEIGH
STANDARD DETAIL.

REVISIONS	DATE: 02/03/	NOT TO SCALE
DATE: 12/2022	DETECTABLE WARNING SURFACE PAVERS	
	T-20.04.2	

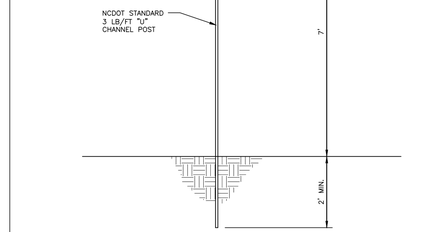

STOP SIGN DETAIL
N.T.S.

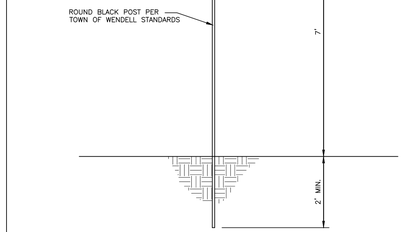

STREET SIGN DETAIL
N.T.S.

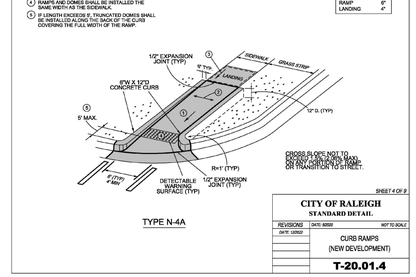

TYPE N-4A

SHEET 4 OF 9

CITY OF RALEIGH
STANDARD DETAIL.

REVISIONS	DATE: 02/03/	NOT TO SCALE
DATE: 12/2022	CURB RAMPS (NEW DEVELOPMENT)	
	T-20.01.4	

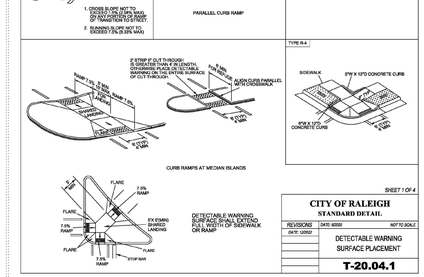

SHEET 1 OF 4

CITY OF RALEIGH
STANDARD DETAIL.

REVISIONS	DATE: 02/03/	NOT TO SCALE
DATE: 12/2022	DETECTABLE WARNING SURFACE PLACEMENT	
	T-20.04.1	

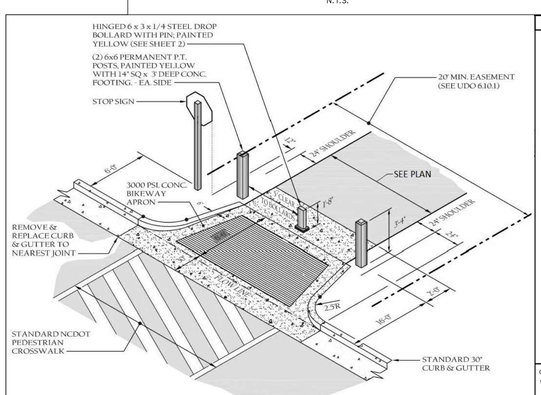

10' GREENWAY TRAIL - 8' ASPHALT TRAIL
STREET TIE-IN

CROSSWALK PLACEMENT GUIDANCE

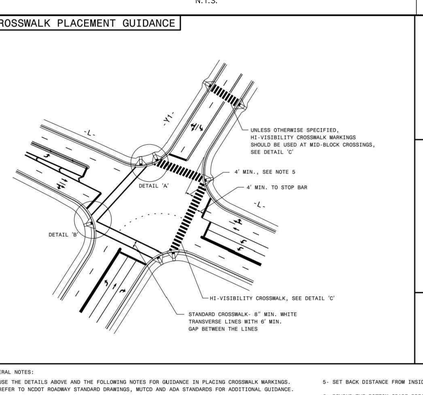

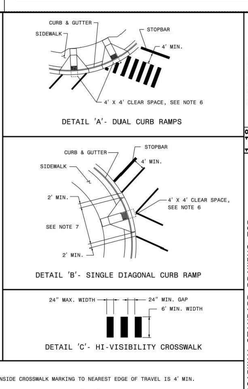

GENERAL NOTES:
1- USE THE DETAILS ABOVE AND THE FOLLOWING NOTES FOR GUIDANCE IN PLACING CROSSWALK MARKINGS. REFER TO NCDOT ROADWAY STANDARD DRAWINGS, MUTCD AND ADA STANDARDS FOR ADDITIONAL GUIDANCE.
2- THE LOCATION AND TYPE OF CROSSWALK MARKINGS SHOWN ON THE ABOVE DETAILS ARE FOR REFERENCE ONLY. LOCATE CROSSWALK MARKINGS AS SHOWN ON THE PROJECT DETAIL SHEETS OR AS DIRECTED BY THE ENGINEER. THE CROSSWALK MARKING TYPE, STANDARD OR HI-VISIBILITY, SHALL BE INSTALLED AS SPECIFIED ON THE PROJECT DETAIL SHEETS OR AS DIRECTED BY THE ENGINEER.
3- THE STANDARD CROSSWALK IS TWO WHITE 6" MIN. TRANSVERSE LINES WITH A 6' MIN. GAP BETWEEN THE LINES. THE HI-VISIBILITY CROSSWALK IS WHITE 24" MAX. WIDE LONGITUDINAL LINES WITH 24" MIN. GAPS BETWEEN LINES, SEE DETAIL 'C'. HI-VISIBILITY CROSSWALKS SHOULD BE A MINIMUM OF 6' WIDE. CURB RAMPS SHALL BE WHOLLY CONTAINED WITHIN THE MARKINGS, EXCLUDING ANY FLARES.
4- STOP BARS SHOULD BE PLACED A 4' MIN. IN ADVANCE OF NEAREST CROSSWALK LINE.
5- SET BACK DISTANCE FROM INSIDE CROSSWALK MARKING TO NEAREST EDGE OF TRAVEL IS 4' MIN.
6- BEYOND THE BOTTOM GRADE BREAK, A CLEAR SPACE OF 4' X 4' MIN. SHALL BE PROVIDED WITHIN THE MARKINGS.
7- SINGLE DIAGONAL CURB RAMPS WITH FLARED SIDES SHALL HAVE A SEGMENT OF CURB 2' MIN. LONG LOCATED ON EACH SIDE OF THE CURB RAMP AND WITHIN THE MARKED CROSSING, SEE DETAIL 'B'.
8- CURB RAMPS SHALL BE CONSTRUCTED IN ACCORDANCE TO THE LATEST NCDOT ROADWAY STANDARD DRAWINGS. CURB RAMPS THROUGH MEDIAN ISLANDS, SINGLE RAMPS AT DUAL CROSSWALKS OR LIMITED R/W SITUATIONS, WILL BE HANDLED BY SPECIAL DETAILS. CONTACT THE CONTRACT STANDARDS AND DEVELOPMENT UNIT FOR DETAILS OR A SPECIAL DESIGN.

STATE OF NORTH CAROLINA DEPT. OF TRANSPORTATION DIVISION OF HIGHWAYS RALEIGH, N.C.

1-18

ROADWAY STANDARD DRAWING FOR
PAVEMENT MARKINGS
PEDESTRIAN CROSSWALKS

SHEET 1 OF 1
1205.07

FINAL DRAWING - NOT RELEASED FOR CONSTRUCTION

M:\Projects\AWH\AWH-20000\04-Production\Engineering\CD PKG 3\Current Drawings\AWH20000-CD-Pkg-03-D1.dwg, 12/13/2023 11:13:53 AM, Tommy Dalbolt

McADAMS
The John R. McAdams Company, Inc.
2905 Meridian Parkway
Durham, NC 27713

phone 919. 361. 5000
fax 919. 361. 2269
license number: C-0293, C-187

www.mcadamsco.com

CLIENT

ASHTON RALEIGH RESIDENTIAL, LLC.
900 RIDGEFIELD DRIVE, SUITE 335
RALEIGH, NORTH CAROLINA 27609
PHONE: 919. 422. 7663
CONTACT: BOB MISHLER

ASHTON WOODS

THE POINT
PHASES 8 AND 14
CONSTRUCTION DRAWINGS - PACKAGE 3
EAST YOUNG STREET
TOWN OF ROLESVILLE, WAKE FOREST TOWNSHIP, WAKE COUNTY, NORTH CAROLINA

CD XX-XX

NORTH CAROLINA PROFESSIONAL ENGINEER SEAL 22630 WILLIAM T. O'DANIEL NOT FOR CONSTRUCTION

REVISIONS

NO.	DATE

PLAN INFORMATION

PROJECT NO.	AWH-20000
FILENAME	AWH20000-CD-PKG-03-D1
CHECKED BY	WTO
DRAWN BY	TKD
SCALE	N.T.S.
DATE	12. 13. 2023

SHEET

SITE DETAILS

C8.01

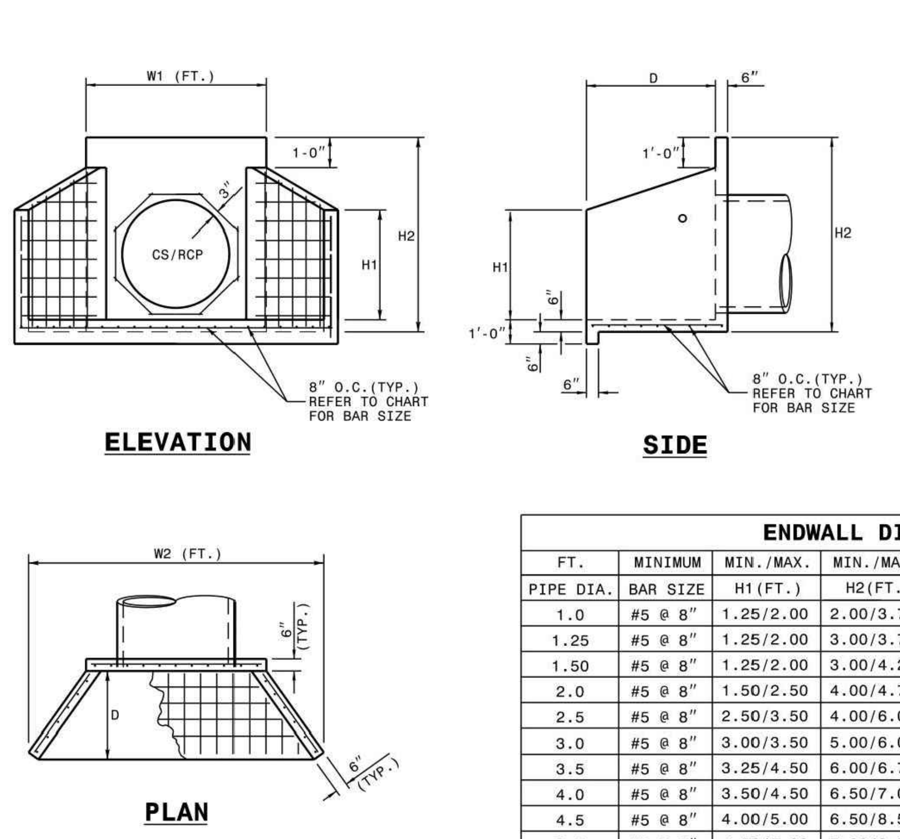

NOTES:

- * THIS PRECAST ENDWALL MAY BE USED FOR THE FOLLOWING STANDARDS: 838.01, 838.11, 838.21, 838.27, 838.33, 838.39, 838.51, 838.57, 838.63 AND 838.69.
- * INSTALL PRECAST ENDWALLS WITH WINGS AND PAY FOR IN ACCORDANCE WITH SPECIFICATION SECTION 838.
- * USE 4000 PSI CONCRETE.
- * PROVIDE ALL REINFORCING STEEL WHICH MEETS ASTM A615 FOR GRADE 60 AND WELDED WIRE FABRIC CONFORMING TO ASTM A185 WITH 2" MIN. CLEARANCE.
- * PLACE LIFT HOLES OR PINS IN ACCORDANCE WITH OSHA STANDARD 1926.704.
- * PIPE TO BE GROUTED INTO HEADWALL AT JOB SITE BY CONTRACTOR
- * ALL ELEMENTS PRECAST TO MEET ASTM C913.
- * WELDED WIRE FABRIC MAY BE SUBSTITUTED FOR REBAR AS LONG AS THE SAME AREA OF STEEL IS PROVIDED.
- * CHAMFER ALL CORNERS 1" OR HAVE A RADIUS OF 1".

NOTE: THE MINIMUM BAR SIZE SHALL BE #5 BARS AT 8" CTS.THE CONTRACTOR WILL HAVE THE OPTION TO INCREASE THIS BAR SIZE AS NEEDED.

ENDWALL DIMENSIONS

FT.	MINIMUM	MIN./MAX.	MIN./MAX.	MIN./MAX.	MIN./MAX.	MIN./MAX.
PIPE DIA.	BAR SIZE	H1(FT.)	H2(FT.)	D (FT.)	W1	W2
1.0	#5 @ 8"	1.25/2.00	2.00/3.75	1.25/1.75	3.00/3.75	5.50/6.00
1.25	#5 @ 8"	1.25/2.00	3.00/3.75	1.25/2.00	3.50/3.75	6.50/6.75
1.50	#5 @ 8"	1.25/2.00	3.00/4.25	1.50/2.50	3.50/3.75	6.50/6.75
2.0	#5 @ 8"	1.50/2.50	4.00/4.75	1.75/2.50	4.00/4.25	7.50/8.25
2.5	#5 @ 8"	2.50/3.50	4.00/6.00	2.00/3.00	4.50/5.50	10.00/11.50
3.0	#5 @ 8"	3.00/3.50	5.00/6.00	2.75/3.50	5.25/5.75	11.50/11.75
3.5	#5 @ 8"	3.25/4.50	6.00/6.75	3.25/3.50	6.00/6.75	12.00/13.25
4.0	#5 @ 8"	3.50/4.50	6.50/7.00	3.25/3.50	6.50/6.75	13.00/13.25
4.5	#5 @ 8"	4.00/5.00	6.50/8.50	3.25/4.00	7.00/9.25	13.50/15.75
5.0	#5 @ 8"	4.50/5.00	7.00/8.50	3.25/4.00	7.25/9.25	13.75/15.75
5.5	#5 @ 8"	4.50/5.00	7.50/8.50	3.25/4.00	7.25/9.25	14.00/15.75
6.0	#5 @ 8"	4.50/5.00	7.50/8.50	3.25/4.00	7.75/9.25	14.75/16.75

1-18 STATE OF NORTH CAROLINA DEPT. OF TRANSPORTATION DIVISION OF HIGHWAYS RALEIGH, N.C.

ROADWAY STANDARD DRAWING FOR **PRECAST CONCRETE ENDWALL** FOR SINGLE 12" THRU 72" PIPE - 90° SKEW

SHEET 1 OF 1 **838.80**

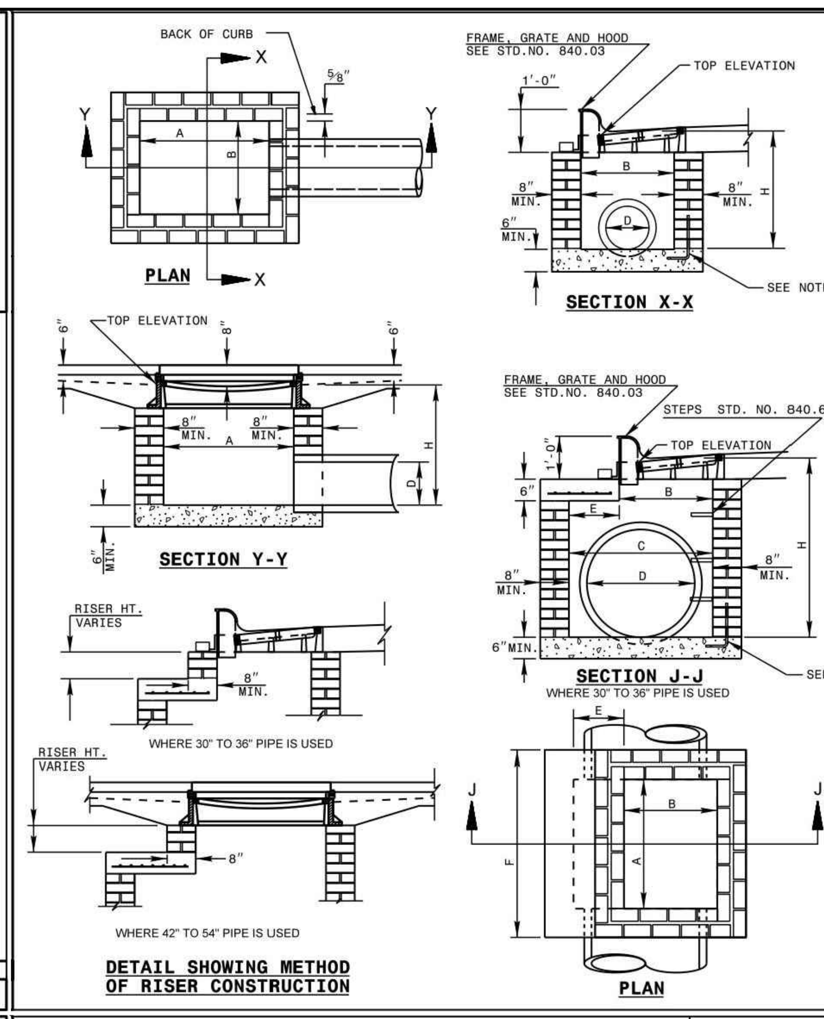

NOTES: MORTAR JOINTS ½" +/- ⅛" THICK.
USE CLASS "B" CONCRETE THROUGHOUT.
USE FORMS FOR CONSTRUCTION OF THE BOTTOM SLAB.
DEDUCT FOR PIPE(S) FROM TOTAL CU. YDS. OF BRICK MASONRY.
USE #4 BAR DOWELS AT 12" CENTERS FOR ALL PIPE SIZES.
PROVIDE ALL CATCH BASINS OVER 3'-6" IN DEPTH WITH STEPS 12" ON CENTER. USE STEPS WHICH COMPLY WITH STD. DRAWING 840.66.
USE TYPE "E", "F" AND "G" GRATES UNLESS OTHERWISE INDICATED.
USE BRICK OR CONCRETE BLOCK WHICH COMPLIES WITH THE REQUIREMENTS OF SECTION 840 OF THE STANDARD SPECIFICATIONS.
IF REINFORCED CONCRETE PIPE IS SET IN BOTTOM SLAB OF BOX, ADD TO SLAB AS SHOWN ON STD. NO. 840.00.
FOR 8'-0" IN HEIGHT OR LESS, USE 8" WALL. OVER 8'-0" IN HEIGHT, USE 12" WALL TO 6'-0" FROM TOP OF WALL AND 8" WALL FOR THE REMAINING 6'-0". QUANTITES TO BE ADJUSTED ACCORDINGLY.
CONSTRUCT WITH PIPE CROWNS MATCHING.
CHAMFER ALL EXPOSED CORNERS 1".
DRAWING NOT TO SCALE.

1-18 STATE OF NORTH CAROLINA DEPT. OF TRANSPORTATION DIVISION OF HIGHWAYS RALEIGH, N.C.

ROADWAY STANDARD DRAWING FOR **BRICK CATCH BASIN** 12" THRU 54" PIPE

SHEET 1 OF 2 **840.01**

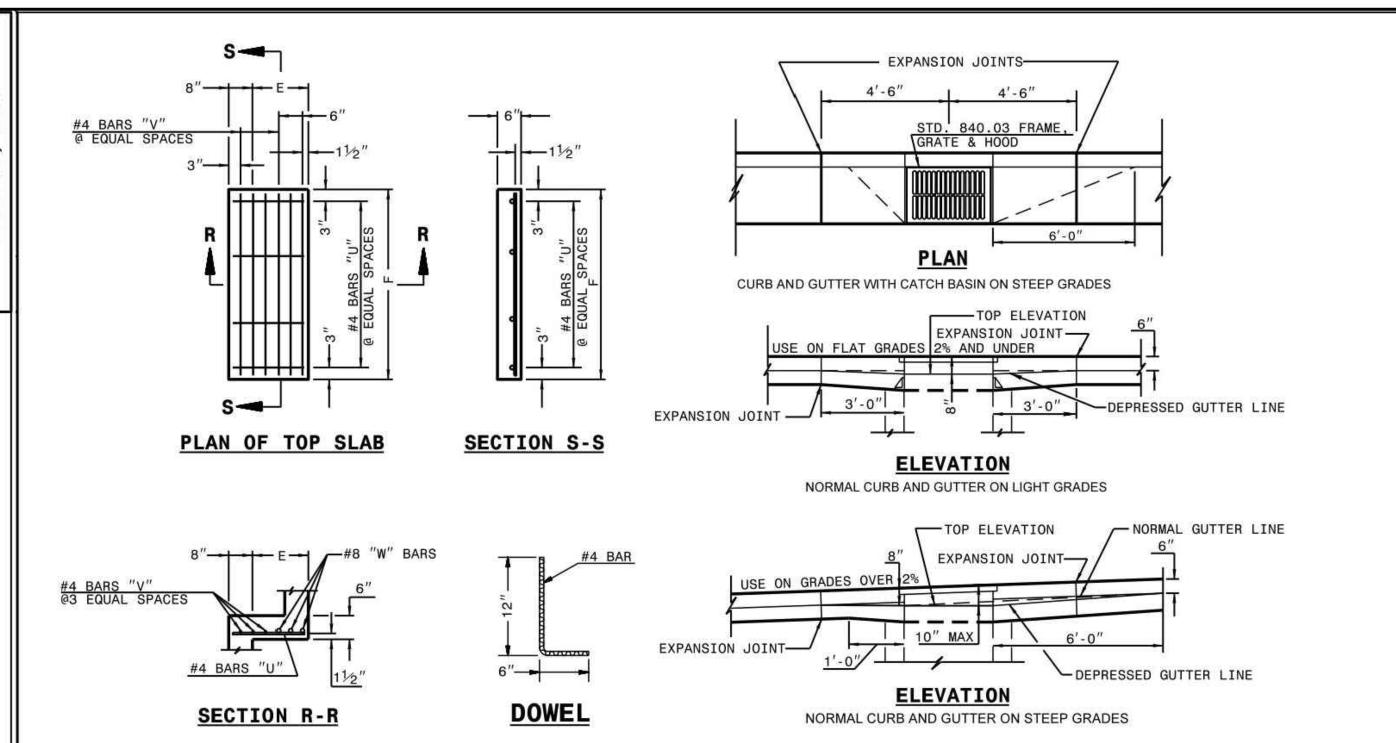

MINIMUM DIMENSIONS AND QUANTITIES FOR BRICK CATCH BASIN(BASED ON MIN. HEIGHT, H, WITH NO RISER)*

DIMENSIONS OF BOX AND PIPE						TOP SLAB DIMENSIONS		BARS-U		BARS-V		BARS-W		TOTAL LBS.	CU.YDS. CONC. IN BOX			BRICK MASONRY		DEDUCTIONS ONE PIPE	
PIPE	SPAN	WIDTH	WIDTH	SPAN	MIN. HEIGHT										TOP SLAB	BOTTOM SLAB	TOTAL CONC.	BRICK MSNR. IN WALLS	TOTAL BRICK AND CONCRETE		
D	A	B	C	G	H	E	F	NO.	LENGTH	NO.	LENGTH	NO.	LENGTH							C.M.	R.C.
12"	3'-0"	2'-2"	--	--	2'-9"	--	--	--	--	--	--	--	--	--	--	0.281	0.281	0.883	1.164	0.020	0.042
15"	3'-0"	2'-2"			3'-0"											0.281	0.281	0.963	1.244	0.031	0.047
18"	3'-0"	2'-2"			3'-3"											0.281	0.281	1.043	1.324	0.044	0.065
24"	3'-0"	2'-2"			3'-9"											0.281	0.281	1.204	1.485	0.078	0.121
30"	3'-0"	2'-2"	3'-4"		4'-3"	1'-2"	4'-4"	4	1'-6"	3	4'-1"	3	4'-1"	45	0.147	0.374	0.521	1.606	2.217	0.122	0.184
36"	3'-0"	2'-2"	3'-10"		4'-9"	1'-8"	4'-4"	4	2'-0"	4	4'-1"	3	4'-1"	49	0.187	0.415	0.602	1.914	2.516	0.176	0.261
42"	3'-0"	2'-2"		4'-5"	5'-3"	1'-5"	3'-6"	4	1'-9"	3	3'-3"	3	3'-3"	38	0.135	0.373	0.508	2.152	2.660	0.240	0.371
48"	3'-0"	2'-2"		5'-0"	5'-9"	2'-0"	3'-6"	4	2'-6"	4	3'-3"	3	3'-3"	41	0.173	0.410	0.583	2.415	2.998	0.313	0.477
54"	3'-0"	2'-2"		5'-7"	6'-3"	2'-7"	3'-6"	4	3'-0"	6	3'-3"	3	3'-3"	47	0.211	0.448	0.659	2.806	3.465	0.396	0.595

* RISER HAS .321 CUBIC YARDS OF BRICK MASONRY PER FOOT HEIGHT

1-18 STATE OF NORTH CAROLINA DEPT. OF TRANSPORTATION DIVISION OF HIGHWAYS RALEIGH, N.C.

ROADWAY STANDARD DRAWING FOR **BRICK CATCH BASIN** 12" THRU 54" PIPE

SHEET 2 OF 2 **840.01**

NOTE: USE TYPE "E", "F" AND "G" GRATE UNLESS OTHERWISE NOTED.

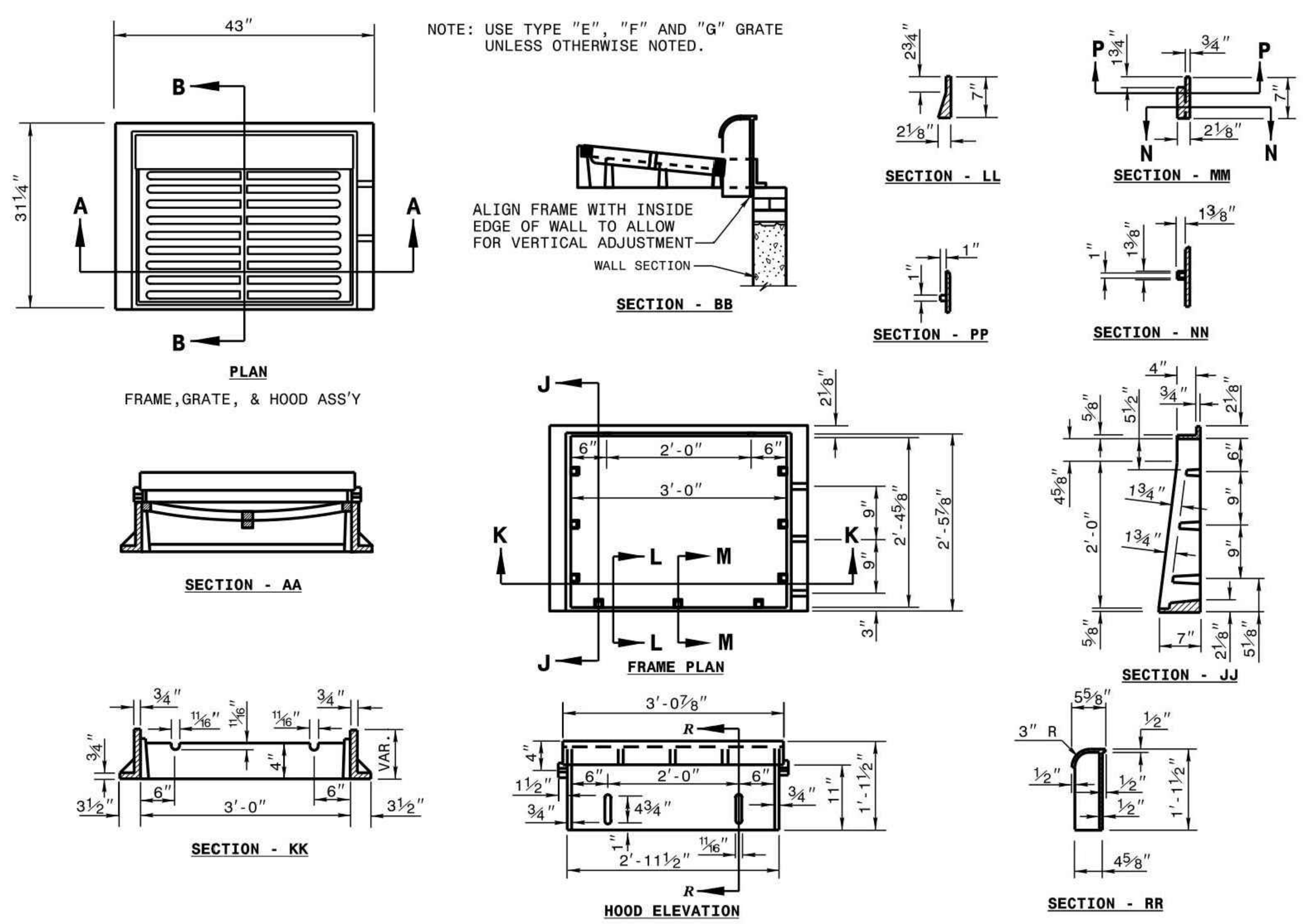

1-18 STATE OF NORTH CAROLINA DEPT. OF TRANSPORTATION DIVISION OF HIGHWAYS RALEIGH, N.C.

ROADWAY STANDARD DRAWING FOR **FRAME, GRATES, AND HOOD** FOR USE ON STANDARD CATCH BASIN

SHEET 1 OF 2 **840.03**

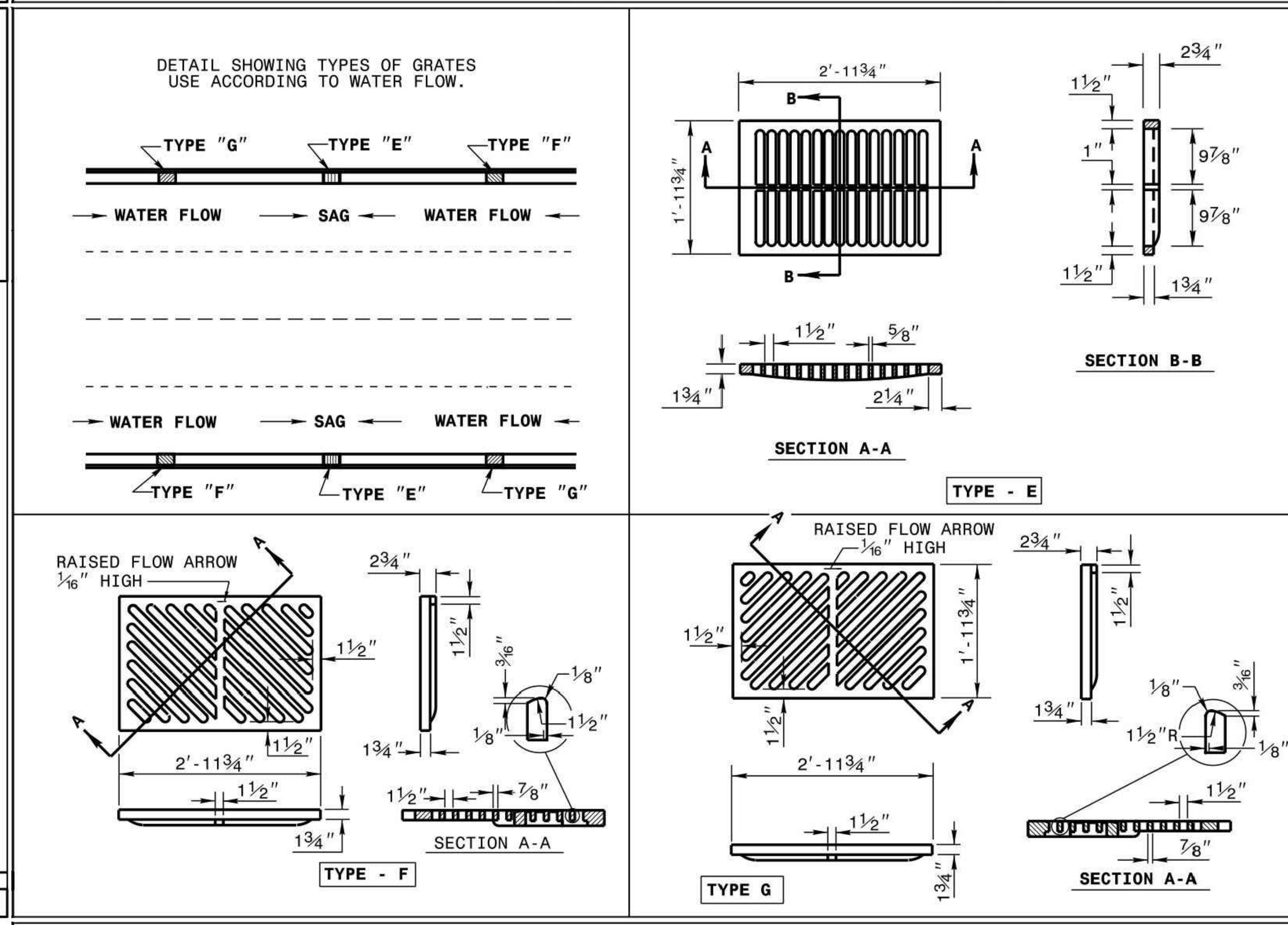

1-18 STATE OF NORTH CAROLINA DEPT. OF TRANSPORTATION DIVISION OF HIGHWAYS RALEIGH, N.C.

ROADWAY STANDARD DRAWING FOR **FRAME, GRATES, AND HOOD** FOR USE ON STANDARD CATCH BASIN

SHEET 2 OF 2 **840.03**

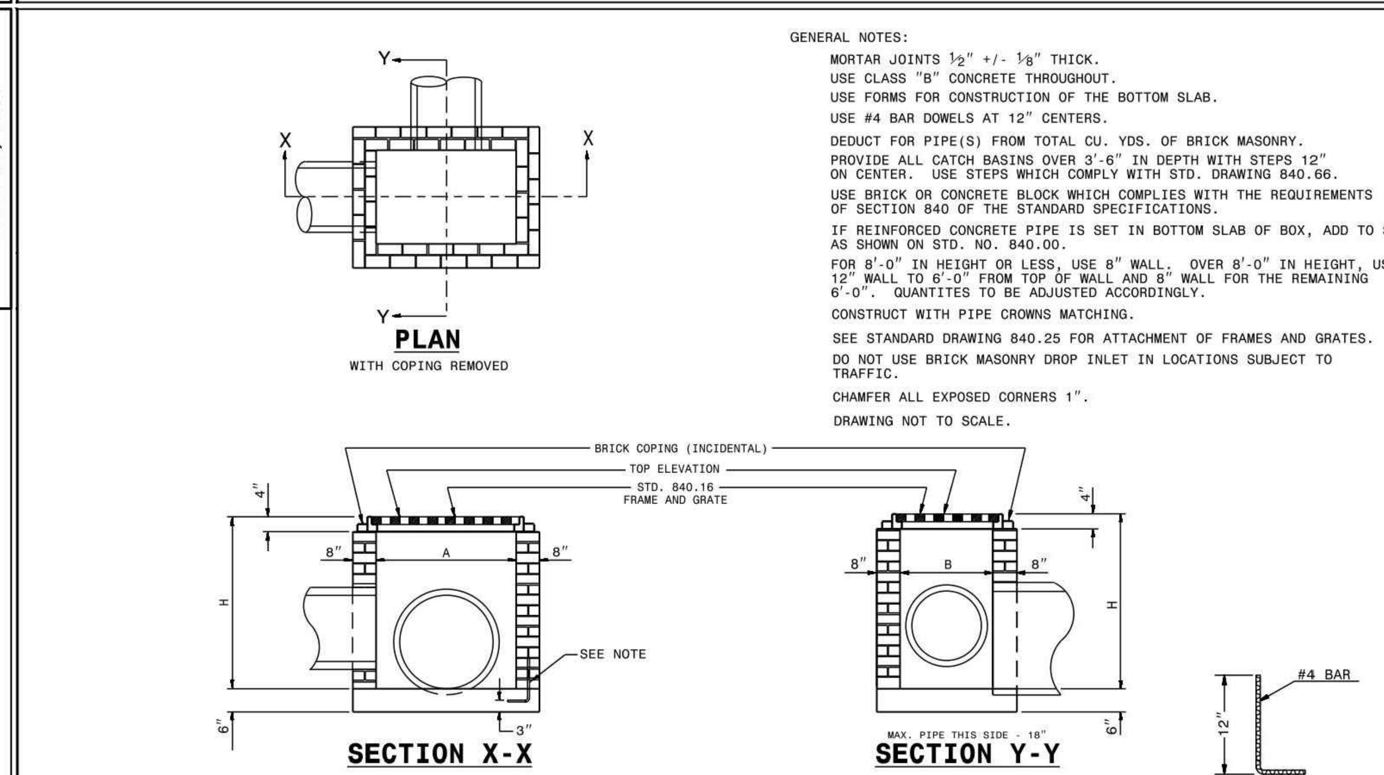

GENERAL NOTES:
MORTAR JOINTS ½" +/- ⅛" THICK.
USE CLASS "B" CONCRETE THROUGHOUT.
USE FORMS FOR CONSTRUCTION OF THE BOTTOM SLAB.
USE #4 BAR DOWELS AT 12" CENTERS.
DEDUCT FOR PIPE(S) FROM TOTAL CU. YDS. OF BRICK MASONRY.
PROVIDE ALL CATCH BASINS OVER 3'-6" IN DEPTH WITH STEPS 12" ON CENTER. USE STEPS WHICH COMPLY WITH STD. DRAWING 840.66.
USE BRICK OR CONCRETE BLOCK WHICH COMPLIES WITH THE REQUIREMENTS OF SECTION 840 OF THE STANDARD SPECIFICATIONS.
IF REINFORCED CONCRETE PIPE IS SET IN BOTTOM SLAB OF BOX, ADD TO SLAB AS SHOWN ON STD. NO. 840.00.
FOR 8'-0" IN HEIGHT OR LESS, USE 8" WALL. OVER 8'-0" IN HEIGHT, USE 12" WALL TO 6'-0" FROM TOP OF WALL AND 8" WALL FOR THE REMAINING 6'-0". QUANTITES TO BE ADJUSTED ACCORDINGLY.
CONSTRUCT WITH PIPE CROWNS MATCHING.
SEE STANDARD DRAWING 840.25 FOR ATTACHMENT OF FRAMES AND GRATES.
DO NOT USE BRICK MASONRY DROP INLET IN LOCATIONS SUBJECT TO TRAFFIC.
CHAMFER ALL EXPOSED CORNERS 1".
DRAWING NOT TO SCALE.

DIMENSIONS AND QUANTITIES FOR DROP INLET(BASED ON MIN. HEIGHT, H)

DIMENSIONS OF BOX & PIPE				CUBIC YARDS CONCRETE	CUBIC YARDS BRICK MASONRY		DEDUCTIONS FOR ONE PIPE	
PIPE	SPAN	WIDTH	MIN. HEIGHT					
D	A	B	H	BOTTOM SLAB	WALL PER FOOT HT.	TOTAL BRICK MASONRY FOR MIN. HEIGHT, H	C.S.	R.C.
12"	3'-0"	2'-0"	2'-0"	0.268	0.313	0.522	0.020	0.032
15"			2'-3"	0.268	0.313	0.600	0.031	0.047
18"			2'-6"	0.268	0.313	0.678	0.044	0.065
24"			3'-0"	0.268	0.313	0.835	0.078	0.113
30"	3'-0"	2'-0"	3'-6"	0.268	0.313	0.991	0.122	0.170

1-18 STATE OF NORTH CAROLINA DEPT. OF TRANSPORTATION DIVISION OF HIGHWAYS RALEIGH, N.C.

ROADWAY STANDARD DRAWING FOR **BRICK DROP INLET** 12" THRU 30" PIPE

SHEET 1 OF 1 **840.15**

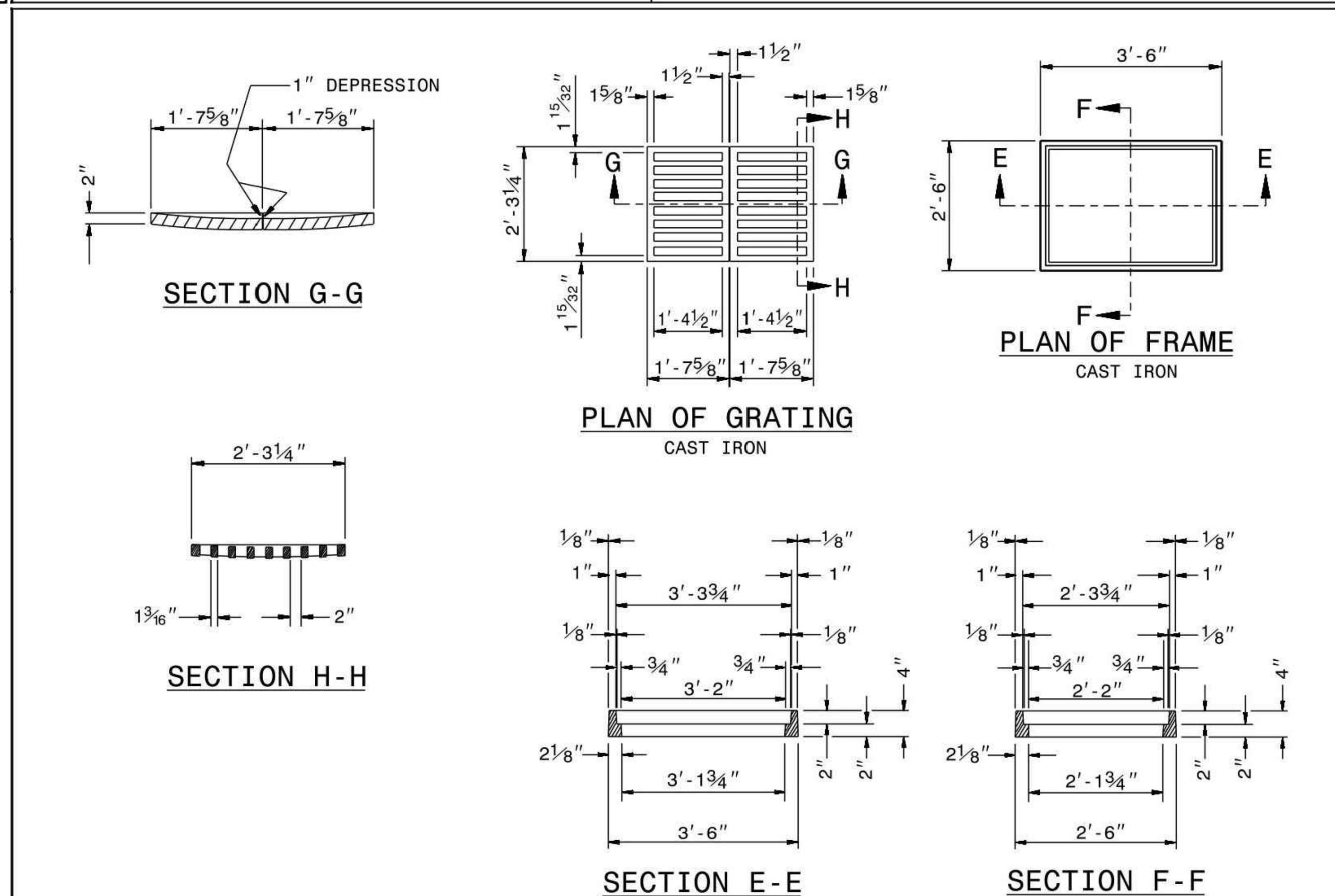

1-18 STATE OF NORTH CAROLINA DEPT. OF TRANSPORTATION DIVISION OF HIGHWAYS RALEIGH, N.C.

ROADWAY STANDARD DRAWING FOR **DROP INLET FRAME AND GRATES** FOR USE WITH STD. DWG.S 840.14 AND 840.15

SHEET 1 OF 1 **840.16**

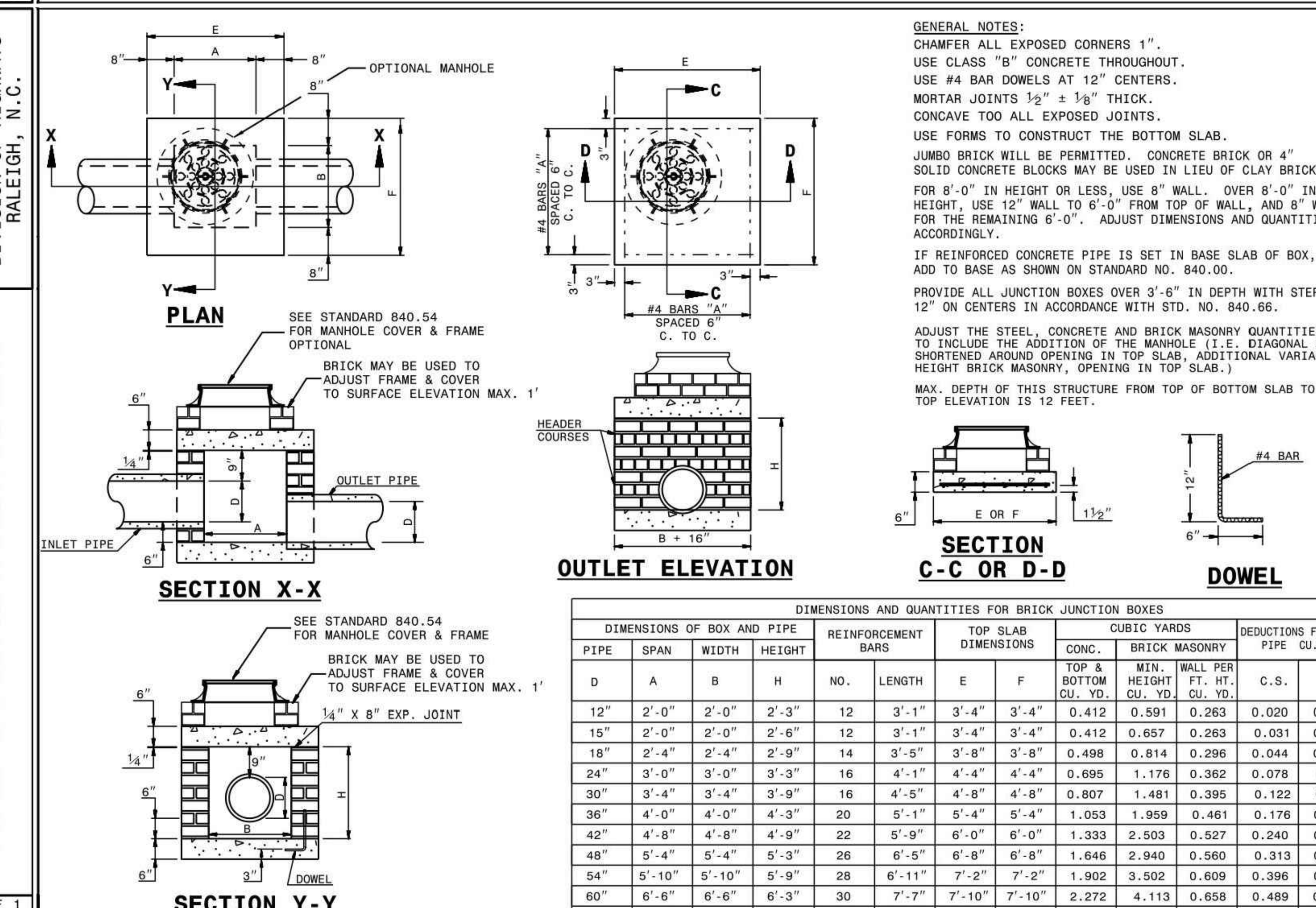

GENERAL NOTES:
CHAMFER ALL EXPOSED CORNERS 1".
USE CLASS "B" CONCRETE THROUGHOUT.
USE #4 BAR DOWELS AT 12" CENTERS.
MORTAR JOINTS ½" ± ⅛" THICK.
CONCAVE TOO ALL EXPOSED JOINTS.
USE FORMS TO CONSTRUCT THE BOTTOM SLAB.
JUMBO BRICK WILL BE PERMITTED. CONCRETE BRICK OR 4" SOLID CONCRETE BLOCKS MAY BE USED IN LIEU OF CLAY BRICK.
FOR 8'-0" IN HEIGHT OR LESS, USE 8" WALL. OVER 8'-0" IN HEIGHT, USE 12" WALL TO 6'-0" FROM TOP OF WALL, AND 8" WALL FOR THE REMAINING 6'-0". ADJUST DIMENSIONS AND QUANTITIES ACCORDINGLY.
IF REINFORCED CONCRETE PIPE IS SET IN BASE SLAB OF BOX, ADD TO BASE AS SHOWN ON STANDARD NO. 840.00.
PROVIDE ALL JUNCTION BOXES OVER 3'-6" IN DEPTH WITH STEPS 12" ON CENTERS IN ACCORDANCE WITH STD. NO. 840.66.
ADJUST THE STEEL, CONCRETE AND BRICK MASONRY QUANTITIES TO INCLUDE THE ADDITION OF THE MANHOLE (I.E. DIAGONAL BARS SHORTENED AROUND OPENING IN TOP SLAB, ADDITIONAL VARIABLE HEIGHT BRICK MASONRY, OPENING IN TOP SLAB.)
MAX. DEPTH OF THIS STRUCTURE FROM TOP OF BOTTOM SLAB TO TOP ELEVATION IS 12 FEET.

DIMENSIONS AND QUANTITIES FOR BRICK JUNCTION BOXES

DIMENSIONS OF BOX AND PIPE				REINFORCEMENT BARS		TOP SLAB DIMENSIONS		CUBIC YARDS			DEDUCTIONS FOR ONE PIPE CU.YDS.	
PIPE	SPAN	WIDTH	HEIGHT					CONC.	BRICK MASONRY			
D	A	B	H	NO.	LENGTH	E	F	TOP & BOTTOM CU. YD.	MIN. HEIGHT CU. YD.	WALL PER FT. HT. CU. YD.	C.S.	R.C.
12"	2'-0"	2'-0"	2'-3"	12	3'-1"	3'-4"	3'-4"	0.412	0.591	0.263	0.020	0.032
15"	2'-0"	2'-0"	2'-6"	12	3'-1"	3'-4"	3'-4"	0.412	0.657	0.263	0.031	0.047
18"	2'-4"	2'-4"	2'-9"	14	3'-5"	3'-8"	3'-8"	0.498	0.814	0.296	0.044	0.065
24"	3'-0"	3'-0"	3'-3"	16	4'-1"	4'-4"	4'-4"	0.695	1.176	0.362	0.078	0.113
30"	3'-4"	3'-4"	3'-9"	16	4'-5"	4'-8"	4'-8"	0.807	1.481	0.395	0.122	0.170
36"	4'-0"	4'-0"	4'-3"	20	5'-1"	5'-4"	5'-4"	1.053	1.959	0.461	0.176	0.238
42"	4'-8"	4'-8"	4'-9"	22	5'-9"	6'-0"	6'-0"	1.333	2.503	0.527	0.240	0.323
48"	5'-4"	5'-4"	5'-3"	26	6'-5"	6'-8"	6'-8"	1.646	2.940	0.560	0.313	0.422
54"	5'-10"	5'-10"	5'-9"	28	6'-11"	7'-2"	7'-2"	1.902	3.502	0.609	0.396	0.535
60"	6'-6"	6'-6"	6'-3"	30	7'-7"	7'-10"	7'-10"	2.272	4.113	0.658	0.489	0.660
66"	7'-1"	7'-1"	6'-9"	32	8'-2"	8'-5"	8'-5"	2.624	4.778	0.708	0.591	0.798

1-18 STATE OF NORTH CAROLINA DEPT. OF TRANSPORTATION DIVISION OF HIGHWAYS RALEIGH, N.C.

ROADWAY STANDARD DRAWING FOR **BRICK JUNCTION BOX** (WITH OPTIONAL MANHOLE) 12" THRU 66" PIPE

SHEET 1 OF 1 **840.32**

MCADAMS
The John R. McAdams Company, Inc.
2905 Meridian Parkway
Durham, NC 27713

phone 919. 361. 5000
fax 919. 361. 2269
license number: C-0293, C-187

www.mcadamsco.com

CLIENT

ASHTON RALEIGH RESIDENTIAL, LLC.
900 RIDGEFIELD DRIVE, SUITE 335
RALEIGH, NORTH CAROLINA 27609
PHONE: 919. 422. 7663
CONTACT: BOB MISHLER

ASHTON WOODS

THE POINT
PHASES 8 AND 14

CONSTRUCTION DRAWINGS - PACKAGE 3
EAST YOUNG STREET
TOWN OF ROLESVILLE, WAKE FOREST TOWNSHIP, WAKE COUNTY, NORTH CAROLINA

CD XX-XX

NORTH CAROLINA PROFESSIONAL SEAL 22630 ENGINEER WILLIAM T. O'DANIEL PRELIMINARY NOT FOR CONSTRUCTION

REVISIONS

NO. DATE

PLAN INFORMATION

PROJECT NO.	AWH-20000
FILENAME	AWH20000-CD-PKG-03-D1
CHECKED BY	WTO
DRAWN BY	TKD
SCALE	N.T.S.
DATE	12. 13. 2023

SHEET

STORM DRAINAGE DETAILS

C8.02

FINAL DRAWING - NOT RELEASED FOR CONSTRUCTION

M:\Projects\AWH\AWH-20000\04-Production\Engineering\CD PKG 3\Current Drawings\AWH20000-CD-Pkg-03-D1.dwg, 12/13/2023 11:14:18 AM, Tommy Dabolt

GENERAL NOTES:

USE STANDARD OR JUMBO BRICK FOR WALL CONSTRUCTION. SOLID CONCRETE BRICK OR BLOCK ARE OPTIONAL WALL CONSTRUCTION MATERIAL

INCLUDE ALL ADJUSTMENTS TO WALLS, SLABS OR REINFORCING MATERIAL IN THE UNIT PRICE BID FOR EACH UNIT.

INSTALL OPTIONAL MANHOLE IN POSITION AS DIRECTED BY THE ENGINEER. CUT OR BEND ALL REBAR CROSSING THIS OPENING TO ALLOW 2" MINIMUM CONCRETE COVERAGE. ENCLOSE THE OPENING WITH 8 "A" BARS TIED TO TO THE REBAR MAT AND SET SO A MINIMUM OF 3" CONCRETE COVER IS ATTAINED. REFERENCE STD. NO. 840.54 FOR MANHOLE INFORMATION.

PROVIDE JUNCTION BOXES WITH MAHNOLES OVER 3'-6" IN DEPTH WITH STEPS PLACED ON 12" CENTERS. REFERENCE STD. NO. 840.66.

SPACE DOWEL "C" BARS AT A MAXIMUM OF 12" CENTERS.

MAXIMUM DEPTH OF THIS UNIT AS SHOWN IS 12'.

CONSTRUCT THE JUNCTION BOX IN ACCORDANCE WITH SECTIONS 830, 832, 834 AND 840 OF THE STANDARD SPECIFICATIONS.

BILL OF MATERIAL

BAR	QTY.	SIZE	LENGTH	WEIGHT
A	8	#5	1'-2"	9.7
B	14	#5	5'-6"	80.3
C	26	#4	1'-6"	26.1
Y	14	#5	6'-11⅜"	101.5
STEEL TOTAL WEIGHT				217.6
CU. YDS. CLASS "AA" CONC.				2.6
CU. YDS. BRICK/FT. HT. (8")				0.53
CU. YDS. BRICK/FT. HT. (12")				0.84

STATE OF NORTH CAROLINA DEPT. OF TRANSPORTATION DIVISION OF HIGHWAYS RALEIGH, N.C. 1-18

ROADWAY STANDARD DRAWING FOR **TRAFFIC BEARING JUNCTION BOX** FOR USE WITH PIPES 42" AND UNDER

SHEET 2 OF 2 **840.34**

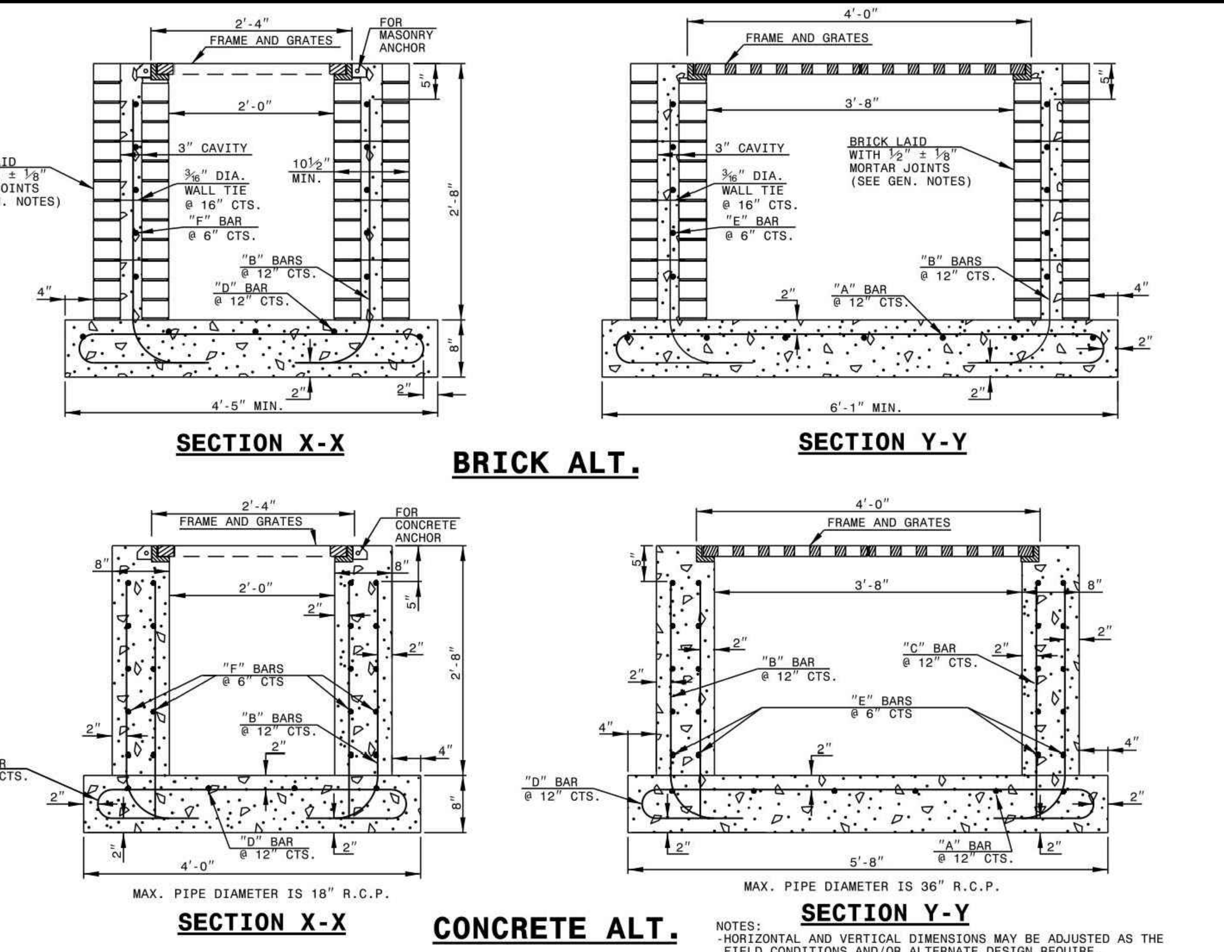

NOTES:
-HORIZONTAL AND VERTICAL DIMENSIONS MAY BE ADJUSTED AS THE FIELD CONDITIONS AND/OR ALTERNATE DESIGN REQUIRE.
-MAXIMUM HEIGHT FOR THIS STRUCTURE IS 14'-0".
-MAKE ALL ADJUSTMENTS AS DIRECTED BY THE ENGINEER.
-DEPTH OF STEEL GRATE WILL REQUIRE DEEPER SEAT ALONG SHORT WALLS.

STATE OF NORTH CAROLINA DEPT. OF TRANSPORTATION DIVISION OF HIGHWAYS RALEIGH, N.C. 1-18

ROADWAY STANDARD DRAWING FOR **TRAFFIC BEARING GRATED DROP INLET** FOR CAST IRON DOUBLE FRAME AND GRATES

SHEET 1 OF 2 **840.35**

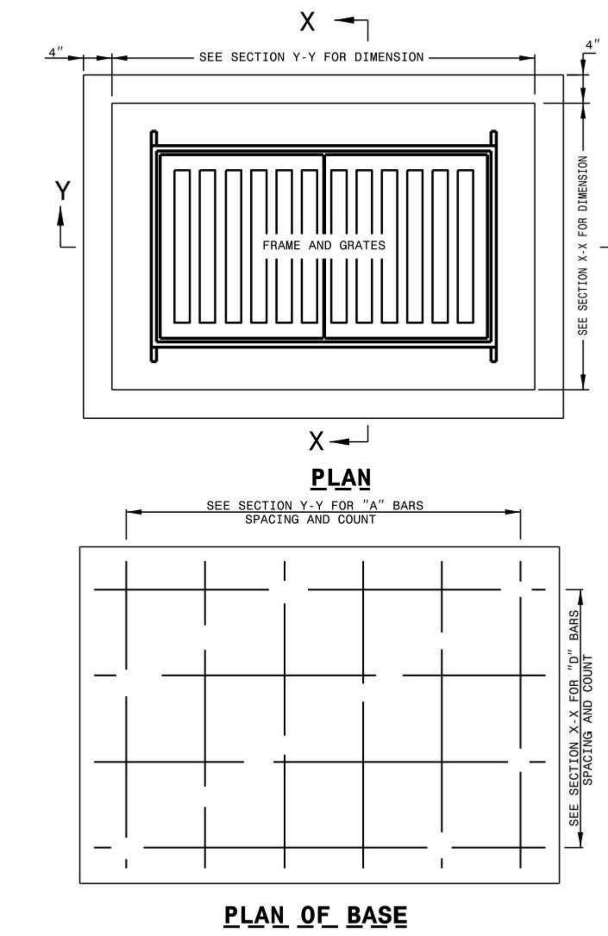

BILL OF MATERIALS

COMMON		CONCRETE ALT.			BRICK ALT.		
BAR	SIZE	LENGTH	QUANTITY	WEIGHT	LENGTH	QUANTITY	WEIGHT
A	#5	6'-4½"	6	39.9	7'-7½"	6	47.7
B	#5	3'-4½"	16	56.3	3'-4½"	16	56.3
C	#5	2'-8"	14	38.9	-0-	-0-	-0-
D	#5	8'-0½"	4	33.6	9'-3½"	4	38.8
E	#5	3'-0"	20	62.6	3'-0"	10	31.3
F	#5	4'-8"	20	97.3	4'-8"	10	48.7
REINF. STEEL (TOTAL WEIGHT LBS.)				328.6			222.8
CONCRETE IN BASE CLASS 'AA' (CUBIC YARDS)				0.56			0.66
CONCRETE IN WALLS CLASS 'AA' (CUBIC YARDS)				0.92			-0-
CONCRETE IN WALLS CLASS 'B' (CUBIC YARDS)				-0-			0.36
BRICK IN WALLS (CUBIC YARDS)				-0-			0.91
CONCRETE TOTAL (CUBIC YARDS)				1.48			1.02
BRICK & CONCRETE TOTAL (CUBIC YARDS)				1.48			1.93
CONC. CUBIC YARDS IN WALL/FOOT OF HEIGHT				0.35			0.14
BRICK CUBIC YARDS IN WALL/FOOT OF HEIGHT				-0-			0.34
LBS. OF REINF. STEEL IN WALL/FOOT OF HEIGHT				94.9			47.6

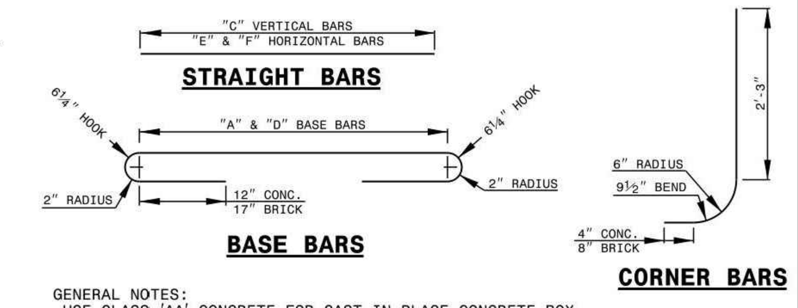

GENERAL NOTES:
-USE CLASS 'AA' CONCRETE FOR CAST IN PLACE CONCRETE BOX.
-USE CLASS 'B' CONCRETE IN THE WALL CAVITY FOR REINFORCED BRICK CONSTRUCTION AND CLASS 'AA' FOR THE FOOTING BASE.
-CHAMFER ALL EXPOSED CONCRETE CORNERS 1".
-USE FORMS TO CONSTRUCT THE BOTTOM SLAB.
-IF PIPES ARE SET IN THE BASE FOLLOW CONSTRUCTION PROCEDURES SHOWN BY STD. DWG. 840.00.
-PRECAST UNITS MADE OF CLASS 'AA' CONCRETE MAY BE USED IN LIEU OF BRICK MASONRY CONSTRUCTION.
-INCLUDE REINFORCING STEEL COST IN THE UNIT OR LINEAR FOOT BID PRICE FOR "MASONRY DRAINAGE STRUCTURE".
-REFERENCE STD. DWG. 840.25 FOR FRAME ANCHORAGE.
-CONCRETE BRICK, JUMBO BRICK AND 4" SOLID CONCRETE BLOCK WILL BE PERMITTED.
-CONCRETE FOR BRICK BOX REFER TO SECTION 832 OF THE STANDARD SPECIFICATIONS.
-PROVIDE GRATED DROP INLETS OVER 3'-6" DEEP WITH STEPS SPACED 12" ON CENTER AS DIRECTED BY STD. DWG. 840.66.
-FRAME AND GRATES ARE SEPARATE CONTRACT ITEMS.

STATE OF NORTH CAROLINA DEPT. OF TRANSPORTATION DIVISION OF HIGHWAYS RALEIGH, N.C. 1-18

ROADWAY STANDARD DRAWING FOR **TRAFFIC BEARING GRATED DROP INLET** FOR CAST IRON DOUBLE FRAME AND GRATES

SHEET 2 OF 2 **840.35**

SOLID COVER SHOWN PERFORATED. PERFORATED AVAILABLE IF SPECIFIED.
STATE USE OF SYSTEM ON COVER
(I.E.: SEWER, STORM DRAIN, ELECTRICAL)

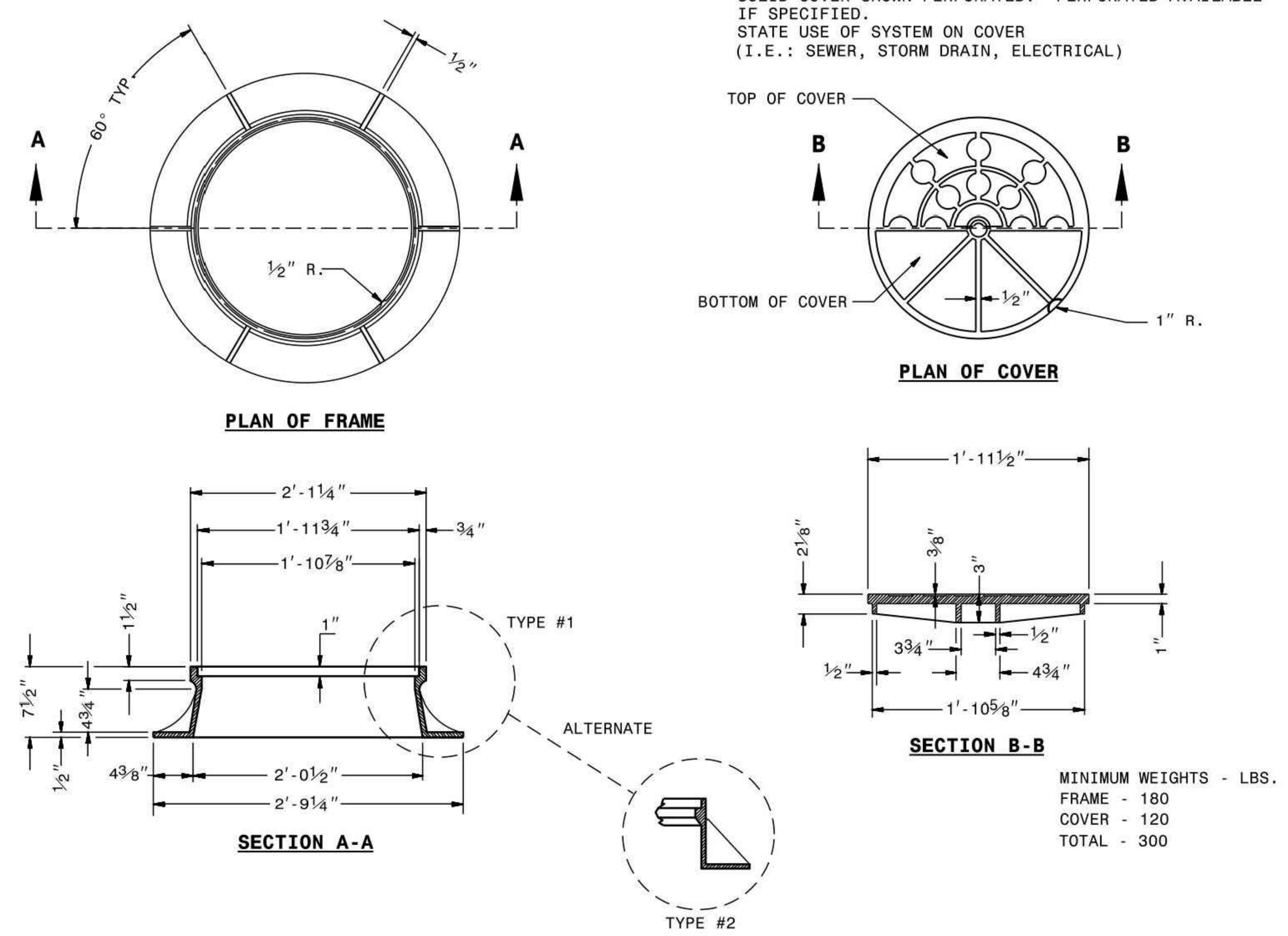

MINIMUM WEIGHTS - LBS.
FRAME - 180
COVER - 120
TOTAL - 300

STATE OF NORTH CAROLINA DEPT. OF TRANSPORTATION DIVISION OF HIGHWAYS RALEIGH, N.C. 1-18

ROADWAY STANDARD DRAWING FOR **MANHOLE FRAME AND COVER**

SHEET 1 OF 1 **840.54**

NOTES:
INSTALL ALL STEPS PROTRUDING 4" FROM INSIDE FACE OF STRUCTURE WALL.
STEPS DIFFERING IN DIMENSIONS, CONFIGURATION, OR MATERIALS FROM THOSE SHOWN MAY ALSO BE USED PROVIDED THE CONTRACTOR HAS FURNISHED THE ENGINEER WITH DETAILS OF THE PROPOSED STEPS AND HAS RECEIVED WRITTEN APPROVAL FROM THE ENGINEER FOR THE USE OF SUCH STEPS.

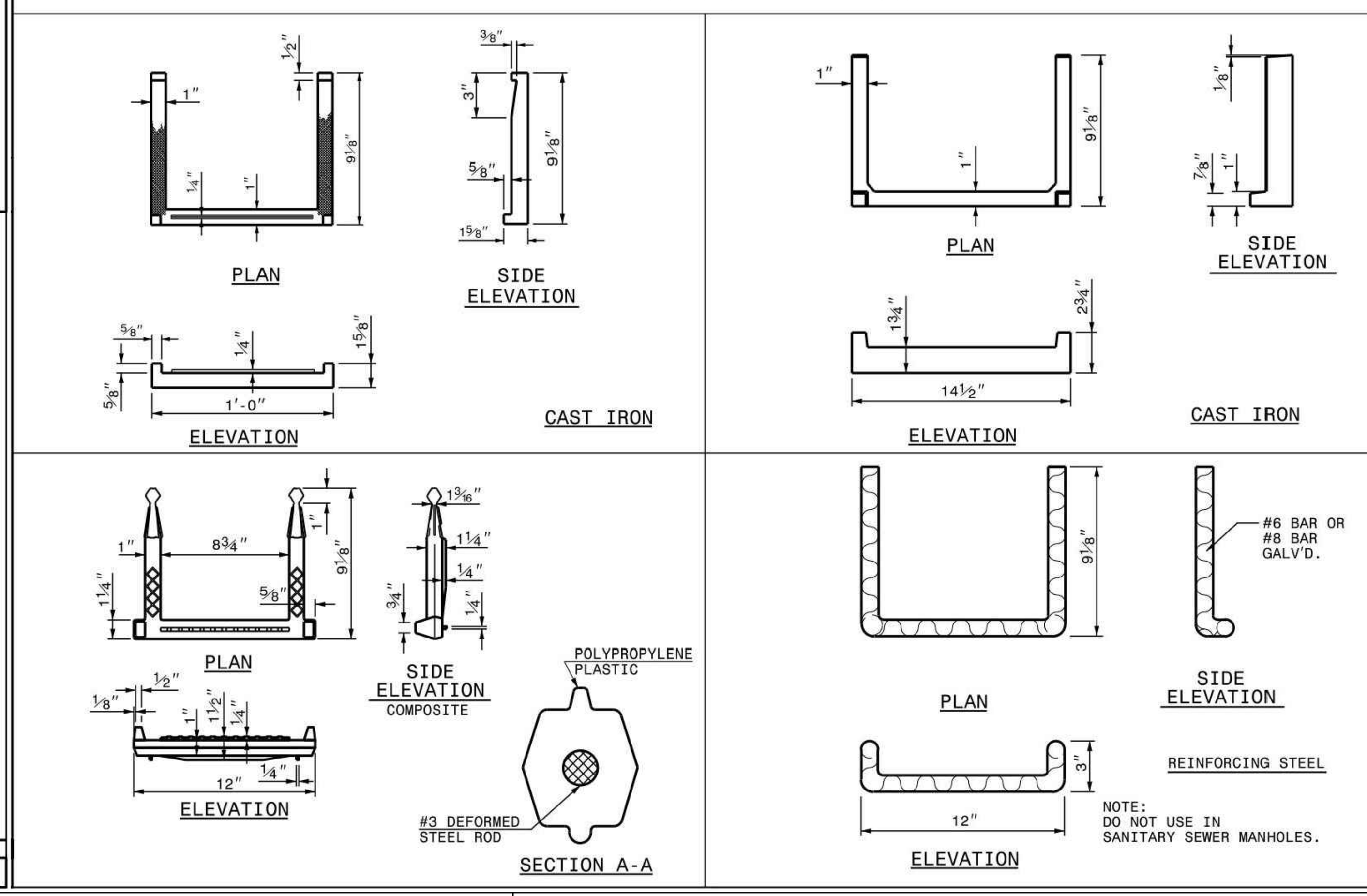

NOTE:
DO NOT USE IN SANITARY SEWER MANHOLES.

STATE OF NORTH CAROLINA DEPT. OF TRANSPORTATION DIVISION OF HIGHWAYS RALEIGH, N.C. 1-18

ROADWAY STANDARD DRAWING FOR **DRAINAGE STRUCTURE STEPS**

SHEET 1 OF 1 **840.66**

H=	THE FILL HEIGHT MEASURED VERTICALLY AT ANY POINT ALONG THE PIPE FROM THE TOP OF THE EMBANKMENT AT THE POINT. DO NOT OPERATE HEAVY EQUIPMENT OVER ANY PIPE CULVERT UNTIL THE PIPE HAS BEEN PROPERLY BACKFILLED AND COVERED WITH AT LEAST 3 FEET OF APPROVED MATERIAL.
	UNDISTURBED EARTH MATERIAL
	BEDDING (MIDDLE AND OUTER): LOOSELY PLACED SELECT BACKFILL MATERIAL MEETING NCDOT CLASS II, TYPE 1 (WASHED OR UNWASHED CRUSHED STONE SCREENINGS) OR CLASS III, TYPE 1 (NCDOT 2S OR 2MS FINE AGGREGATE). LEAVE SECTION DIRECTLY BENEATH PIPE UNCOMPACTED AS PIPE SEATING AND BACKFILL WILL ACCOMPLISH COMPACTION.
	SELECT BACKFILL (BELOW SPRINGLINE): SELECT BACKFILL MATERIAL MEETING NCDOT CLASS II, TYPES 1 OR 2 OR NCDOT CLASS III, TYPES 1 OR 2
	BACKFILL: APPROVED SUITABLE LOCAL COMPACTABLE MATERIAL ABOVE SPRINGLINE OF PIPE MEETING LOCAL MUNICIPAL SPECIFICATIONS.
	ROCK FOUNDATION OR UNSUITABLE MATERIAL FOUNDATION: SELECT MATERIAL NCDOT CLASS V (#78M STONE) OR NCDOT CLASS VI (#57 STONE) FOR FOUNDATION CONDITIONING. ENCAPSULATE WITH ENGINEERING FABRIC AS DIRECTED BY THE ENGINEER: TYPE 4 SOIL STABILIZATION FABRIC (NCDOT TABLE 1056-1). OVERLAP ALL TRANSVERSE AND LONGITUDINAL JOINTS IN FABRIC AT LEAST 18 INCHES. MAINTAIN THE PIPE FOUNDATION IN A DRY CONDITION.

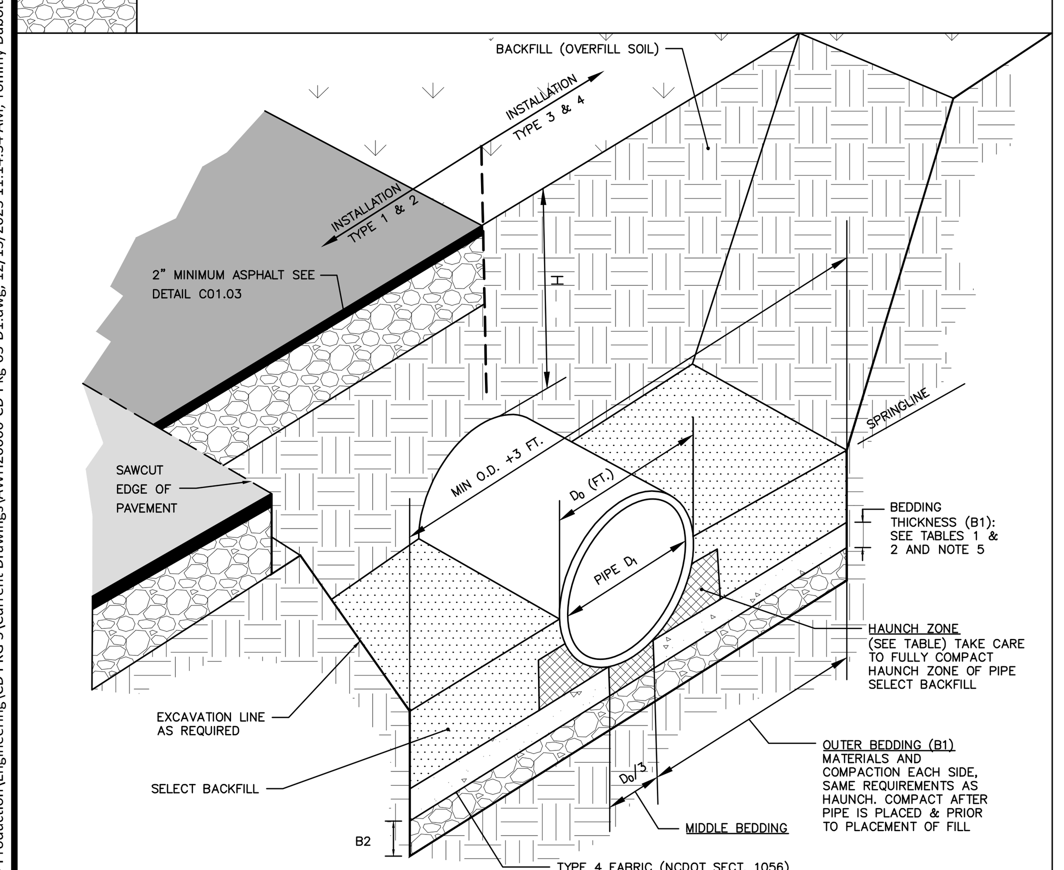

STORM DRAIN PIPE INSTALLATION
N.T.S.

1 OF 3

TABLE 1
EQUIVALENT USCS[a] AND AASHTO SOIL CLASSIFICATION FOR SIDD[b] SOIL DESIGNATIONS

SIDD	USCS	NCDOT/AASHTO
GRAVELLY SAND (CATEGORY I)	SW, SP, GW, GP	-NCDOT CLASS II-TYPE I (CRUSHED STONE SCREEENINGS), LL<30; PI≤6 -NCDOT CLASS III, TYPE I (2S OR 2MS), LL<30; PI≤6
SANDY SILT (CATEGORY II)	GM, SM, ALSO GC, SC WITH LESS THAN 20% PASSING #200 SIEVE	-NCDOT CLASS II TYPE I (CRUSHED STONE SCREENINGS) AND CLASS II, TYPE 2 (AASHTO M145 FOR A-2-4 WITH MAX PI OF 6, A-4 W/ MAX 45% PASSING #200 SIEVE AND A MAX PI OF 6) -NCDOT CLASS III, TYPE 1 (2S OR 2MS) OR CLASS III, TYPE 2 (AASHTO M145 FOR SOIL CLASSIFICATION A-1 OR A-3)
SILTY CLAY (CATEGORY III)	CL, MH, GC, SC	A5, A6

a UNIFOLD SOIL CLASSIFICATION SYSTEM
b STANDARD INSTALLATIONS DIRECT DESIGN

TABLE 2
STANDARD INSTALLATIONS SOILS AND MINIMUM COMPACTION REQUIREMENTS

INSTALLATION TYPE	BEDDING THICKNESS	OUTER BEDDING (B1) NOTE 5 (% COMPACTION/CATEGORY)	HAUNCH ZONE & SELECT BACKFILL AREA (% COMPACTION/CATEGORY)	LOCATION
TYPE 1	B1 = Di/6 (6" MIN) B2=IF ROCK FOUNDATION OR OVER UNSUITABLE FOUNDATION, ½" /FT OF 'H', 12" MIN/24" MAX	95% CATEGORY 1	90% CATEGORY 1 95% CATEGORY II	PAVED AREAS WITH 2' OR LESS BURY
TYPE 2	B1 = Di/6 (6" MIN) B2=IF ROCK FOUNDATION OR OVER UNSUITABLE FOUNDATION, ½" /FT OF 'H', 12" MIN/24" MAX	90% CATEGORY 1	85% CATEGORY 1 90% CATEGORY II	PAVED AREAS WITH GREATER THAN 2' OF BURY
TYPE 3	B1 = Di/6 (6" MIN) B2=IF ROCK FOUNDATION OR OVER UNSUITABLE FOUNDATION, ½" /FT OF 'H', 12" MIN/24" MAX	85% CATEGORY 1 90% CATEGORY II	85% CATEGORY 1 90% CATEGORY II OR 95% CATEGORY III	IN R/W OUTSIDE OF PAVEMENT
TYPE 4	B1 = Di/6 (6" MIN) B2=IF ROCK FOUNDATION OR OVER UNSUITABLE FOUNDATION, ½" /FT OF 'H', 12" MIN/24" MAX	NO COMPACTION REQUIRED, EXCEPT IF CATEGORY III, USE 85% CATEGORY III	NO COMPACTION REQUIRED, EXCEPT IF CATEGORY III, USE 85% CATEGORY III	NATURAL AREAS

NOTES:
1. COMPACTION AND SOIL SYMBOLS – I.E. "95% CATEGORY I" – REFERS TO CATEGORY I SOIL MATERIAL WITH MINIMUM STANDARD PROCTOR COMPACTION OF 95%.
2. SOIL IN THE OUTER BEDDING, HAUNCH, AND LOWER SIDE ZONES, EXCEPT UNDER THE MIDDLE ⅓ OF THE PIPE, SHALL BE COMPACTED TO AT LEAST THE SAME COMPACTION AS THE MAJORITY OF THE SOIL IN THE OVERFILL (BACKFILL) ZONE.
3. FOR TRENCHES. THE TOP ELEVATION SHALL BE NO LOWER THAN 0.1H BELOW FINISHED GRADE OR, FOR ROADWAYS, ITS TOP SHALL BE NO LOWER THAN AN ELEVATION OF 1-FOOT BELOW THE BOTTOM OF THE PAVEMENT BASE MATERIAL.
4. FOR TRENCHES, THE WIDTH SHALL BE WIDER THAN SHOWN IF REQUIRED FOR ADEQUATE SPACE TO ATTAIN THE SPECIFIED COMPACTION IN THE HAUNCH AND BEDDING ZONES.
5. COMPACT OUTER BEDDING AFTER PIPE IS PLACED AND PRIOR TO PLACEMENT OF SELECT FILL. MIDDLE BEDDING IS UNCOMPACTED.
6. OVERFILL (BACKFILL) SOILS TO BE PLACED PER STANDARD SPECIFICATION 02700 STORM DRAINAGE FOR THE APPLICABLE BACKFILL TYPE AND BURY LIMITATIONS.
7. THESE TWO TABLES WERE MODIFIED TO GENERALLY CONFORM TO THE NCDOT STANDARDS AS SHOWN IN DETAIL 300.01 RIGID PIPE IN TRENCH CONDITION.

REFERENCE SOURCES:
1. AMERICAN CONCRETE PIPE ASSOCIATION DESIGN STANDARDS
2. 2012 NCDOT STANDARD SPECIFICATIONS FOR ROADS AND STRUCTURES AND NCDOT STANDARD DETAILS 300.01 FOR RIGID PIPE, TRENCH CONDITIONS."

STORM DRAIN PIPE INSTALLATION

2 OF 3

FILL HEIGHT TABLE[a]

	TYPE 3 (BEDDING) INSTALLATION (0.01 INCH CRACK)		TYPE 4 (BEDDING) INSTALLATION (0.01 INCH CRACK)	
INSIDE PIPE DIAMETER Di (INCHES)	CLASS III PIPE MAXIMUM BURY H (FEET)	CLASS IV PIPE MAXIMUM BURY H (FEET)	CLASS III PIPE MAXIMUM BURY H (FEET)	CLASS IV PIPE MAXIMUM BURY H (FEET)
15	2 MIN, 12 MAX	1 MIN, 20 MAX	3 MIN, 7 MAX	2 MIN, 12 MAX
18	2 MIN, 12 MAX	1 MIN, 20 MAX	3 MIN, 7 MAX	1 MIN, 13 MAX
24	1 MIN, 12 MAX	1 MIN, 20 MAX	2 MIN, 8 MAX	1 MIN, 13 MAX
30	1 MIN, 12 MAX	1 MIN, 20 MAX	1 MIN, 8 MAX	1 MIN, 13 MAX
36	1 MIN, 12 MAX	1 MIN, 20 MAX	1 MIN, 8 MAX	1 MIN, 13 MAX
42	1 MIN, 12 MAX	1 MIN, 20 MAX	1 MIN, 8 MAX	1 MIN, 13 MAX
48	1 MIN, 12 MAX	1 MIN, 19 MAX	1 MIN, 8 MAX	1 MIN, 13 MAX
54	1 MIN, 12 MAX	1 MIN, 19 MAX	1 MIN, 8 MAX	1 MIN, 13 MAX
60	1 MIN, 12 MAX	1 MIN, 19 MAX	1 MIN, 8 MAX	1 MIN, 13 MAX
72	1 MIN, 11 MAX	1 MIN, 19 MAX	1 MIN, 7 MAX	1 MIN, 13 MAX

FILL HEIGHT TABLE BASE ON:
1. Ys = 120 PCF (BACKFILL LOAD)
2. AASHTO HL-93 LIVE LOAD
3. POSITIVE PROJECTING EMBANKMENT CONDITION (THIS GIVES CONSERVATIVE RESULTS IN COMPARISON TO TRENCH CONDITIONS)
4. PIPE = REINFORCED CONCRETE PIPE MEETING ASTM C76 (AASHTO M170), WALL C THICKNESS
5. CONCRETE PIPE SHOULD BE INSTALLED IN ACCORDANCE WITH AASHTO LRFD BRIDGE CONSTRUCTION SPECIFICATIONS SECTION 27 OR ASTM C1479.

a FILL HEIGHT TABLES, THE PORTION EXCERPTED HERE. WAS DEVELOPED BY THE AMERICAN CONCRETE PIPE ASSOCIATION (ACPA) USING THE INDIRECT DESIGN METHOD IN ACCORDANCE WITH SECTION 12.10.4.3 OF THE AASHTO LRFD BRIDGE DESIGN SPECIFICATION, 4TH, 2007 WITH 2008 INTERIM.

NOTES:
1. GREATER BURY DEPTHS THAN THOSE SHOWN ABOVE ARE ACHIEVABLE BY EITHER USING TYPE 1 OR 2 INSTALLATION, USING CLASS V PIPE, CONTROLLING BACKFILL TYPE, CALCULATING DEPTH USING A TRENCH CONDITION, OR BY SPECIAL DESIGN. SEE ALSO DESIGN DATA 9 PUBLISHED BY THE ACPA FOR DESIGN METHODOLOGY.
2. IN LIEU OF CALCULATING BURY DEPTH FOR OTHER CONDITIONS, FIRST SEE "LRFD FILL HEIGHT TABLES FOR CONCRETE PIPE", LAST REVISED JULY 2009 OR LATER), PREPARED BY THE ACPA FOR OTHER BURY DEPTH POSSIBILITIES

STORM DRAIN PIPE INSTALLATION

3 OF 3

McADAMS
The John R. McAdams Company, Inc.
2905 Meridian Parkway
Durham, NC 27713

phone 919. 361. 5000
fax 919. 361. 2269
license number: C-0293, C-187

www.mcadamsco.com

CLIENT

ASHTON RALEIGH RESIDENTIAL, LLC.
900 RIDGEFIELD DRIVE, SUITE 335
RALEIGH, NORTH CAROLINA 27609
PHONE: 919. 422. 7663
CONTACT: BOB MISHLER

ASHTON WOODS

THE POINT
PHASES 8 AND 14
CONSTRUCTION DRAWINGS - PACKAGE 3
EAST YOUNG STREET
TOWN OF ROLESVILLE, WAKE FOREST TOWNSHIP, WAKE COUNTY, NORTH CAROLINA

CD XX-XX

NORTH CAROLINA PROFESSIONAL SEAL 22630 ENGINEER WILLIAM T. O'DANIEL
PRELIMINARY NOT FOR CONSTRUCTION

REVISIONS

NO. DATE

PLAN INFORMATION

PROJECT NO.	AWH-20000
FILENAME	AWH20000-CD-PKG-03-D1
CHECKED BY	WTO
DRAWN BY	TKD
SCALE	N.T.S.
DATE	12. 13. 2023

SHEET

STORM DRAINAGE DETAILS

C8.03

FINAL DRAWING - NOT RELEASED FOR CONSTRUCTION

M:\Projects\AWH\AWH-20000\04-Production\Engineering\CD PKG 3\Current Drawings\AWH20000-CD-Pkg-03-D1.dwg, 12/13/2023 11:14:34 AM, Tommy Dabolt

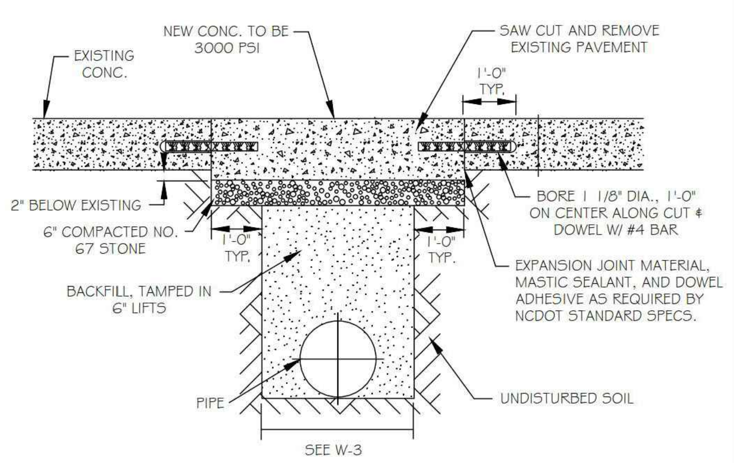

NOTES:
1. SEE CITY OF RALEIGH STANDARDS FOR TRENCHES AND PIPE BEDDING W-3 FOR ADDITIONAL DETAILS
2. PAVEMENT CUTS WITHIN NCDOT ROW SHALL CONFORM TO THE APPROVED ON SITE ENCROACHMENT PERMIT.
3. THE PAVEMENT CUT SHALL BE DEFINED BY A STRAIGHT EDGE AND CUT WITH AN APPROVED SAW CUT MACHINE.
4. THE TRENCH SUBGRADE MATERIAL SHALL BE BACKFILLED WITH SUITABLE MATERIAL AND COMPACTED TO A DENSITY OF AT LEAST 95% OF THAT OBTAINED BY COMPACTING A SAMPLE OF THE MATERIAL IN ACCORDANCE WITH AASHTO T-99 AS MODIFIED BY NCDOT. 5. THE FINAL 6" OF FILL SHALL CONSIST OF ABC MATERAIL COMPACTED TO A DENSITY EQUAL TO 100% OF THAT OBTAINED BY COMPACTING A SAMPLE OF THE MATERIAL IN ACCORDANCE WITH AASHTO T-80 AS MODIFIED BY NCDOT .

CITY OF RALEIGH
DEPARTMENT OF PUBLIC UTILITIES
STANDARD CONCRETE PAVEMENT PATCH DETAIL

DWG. NO.	REVISIONS	DATE	REVISIONS	DATE
W-1	RRH	3-31-00	A.B.B.	10-29-10
	A.B.B.	2-8-05	MAB	10-31-13

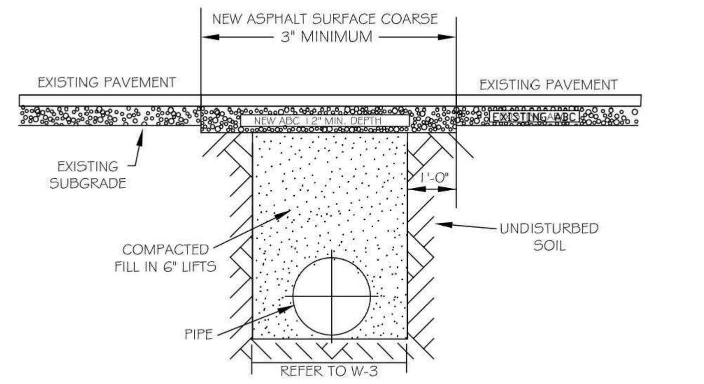

NOTES:
1. THE PAVEMENT CUT SHALL BE DEFINED BY A STRAIGHT EDGE AND CUT WITH AN APPROPRIATE SAW CUT MACHINE.
2. THE TRENCH SUBGRADE MATERIAL SHALL BE BACKFILLED WITH SUITABLE MATERIAL AND COMPACTED TO A DENSITY OF AT LEAST 95% OF THAT OBTAINED BY COMPACTING A SAMPLE OF THE MATERIAL IN ACCORDANCE WITH AASHTO T-99 AS MODIFIED BY NCDOT.
3. THE FINAL 1' OF FILL SHALL CONSIST OF ABC MATERIAL COMPACTED TO A DENSITY EQUAL TO 100% OF THAT OBTAINED BY COMPACTING A SAMPLE OF THE MATERIAL IN ACCORDANCE WITH AASHTO T-80 AS MODIFIED BY NCDOT.
4. THE ENTIRE THICKNESS/ VERTICAL EDGE OF CUT SHALL BE TACKED.
5. THE SAME DEPTH OF PAVEMENT MATERIAL WHICH EXISTS SHALL BE REINSTALLED, BUT IN NO CASE SHALL THE ASPHALT BE LESS THAN 3" THICK.
6. THE ASPHALT PAVEMENT MATERIAL SHALL BE INSTALLED AND COMPACTED THOROUGHLY WITH A SMOOTH DRUM ROLLER TO ACHIEVE A SMOOTH LEVEL PATCH.
7. REFER TO CITY OF RALEIGH STANDARDS FOR TRENCHES AND PIPE BEDDING, W-3. FOR ADDITIONAL DETAILS.
8. NO HAND PATCHING ALLOWED.
9. PAVEMENT CUTS WITHIN NCDOT ROW SHALL CONFORM TO THE APPROVED ON SITE ENCROACHMENT PERMIT.

CITY OF RALEIGH
DEPARTMENT OF PUBLIC UTILITIES
STANDARD ASPHALT PAVEMENT PATCH DETAIL

DWG. NO.	REVISIONS	DATE	REVISIONS	DATE
W-2	RRH	3-31-00	A.B.B.	4-16-04
	D.W.C.	11-1-99	J.P.S.	10-29-10

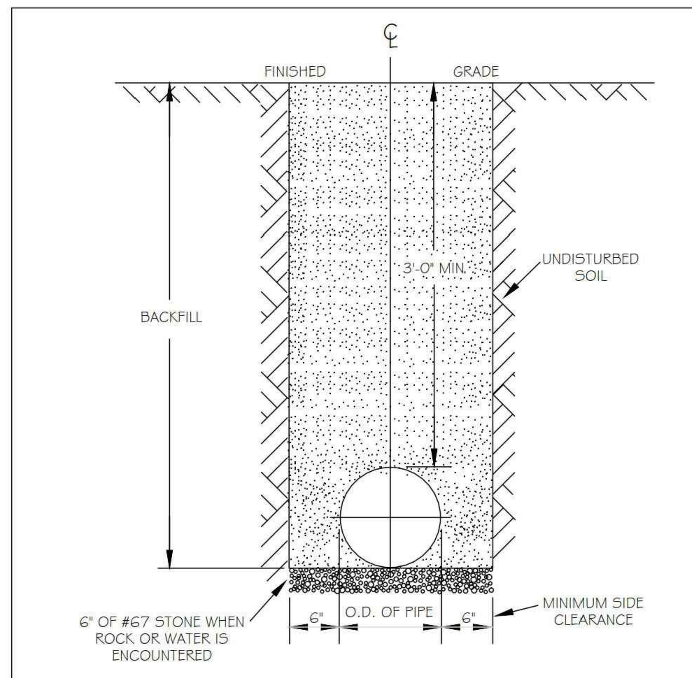

NOTES:
1. TRENCHES REQUIRING SHORING AND BRACING, DIMENSIONS SHALL BE TAKEN FROM THE INSIDE FACE OF THE SHORING AND BRACING.
2. NO ROCKS OR BOULDERS 4" OR LARGER TO BE USED IN BACKFILL.
3. ALL BACKFILL MATERIAL SHALL BE SUITABLE NATIVE MATERIAL.
4. BACKFILL SHALL BE TAMPED IN 6" LIFTS.
5. ACHIEVE 95% COMPACTION IN BACKFILL.

CITY OF RALEIGH
DEPARTMENT OF PUBLIC UTILITIES
TRENCH BOTTOM DIMENSIONS & BACKFILLING REQUIREMENTS FOR DUCTILE IRON

DWG. NO.	REVISIONS	DATE	REVISIONS	DATE
W-3	D.W.C.	9-3-99	ABB	2-15-05
	RRH	3-31-00	J.P.S.	10-29-10

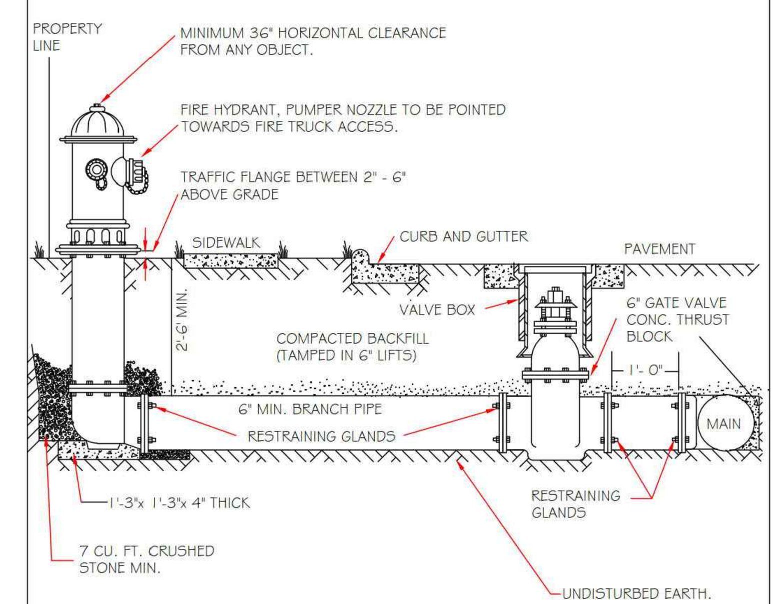

NOTES:
1. FIRE HYDRANT SHALL BE AS MANUFACTURED: MUELLER, AMERICAN DARLING, KENNEDY, M&H, WATEROUS, CLOW, EAST JORDAN IRON WORKS, OR US PIPE.
2. BRANCH PIPE SHALL BE DUCTILE IRON AWWA C150-96
3. 6" GATE VALVE SHALL BE AWWA C500-86 OPEN LEFT
4. STEEL RODS AND BOLTS SHALL BE $\frac{3}{4}$" HOT DIPPED GALVANIZED
5. FIRE HYDRANTS WILL BE INSTALLED IN TRUE VERTICAL POSITION RODS SHALL NOT BE COUPLED MORE THAN ONCE. IF THE LENGTH FROM THE VALVE TO THE HYDRANT EXCEEDS 20' THEN A MECHANICAL RESTRAINING GLAND WITH A REBAR CAGE SHALL BE INSTALLED NO MORE THAN 10' FROM HYDRANT AND POURED IN CONCRETE. FIRE HYDRANTS TO BE LOCATED IN ROW OR 2 FOOT EASEMENT ADJACENT TO ROW

ANYTIME SITE WORK, CONSTRUCTION, ROAD WORK, OR ANY OTHER WORK CHANGES THE GRADE OF THE FIRE HYDRANT, THE PERSON RESPONSIBLE FOR THE WORK IS RESPONSIBLE FOR ADJUSTING THE FIRE HYDRANT TO STAY WITHIN COMPLIANCE.

CITY OF RALEIGH
DEPARTMENT OF PUBLIC UTILITIES
STANDARD FIRE HYDRANT INSTALLATION DETAIL

DWG. NO.	REVISIONS	DATE	REVISIONS	DATE
W-4	ABB	4-6-04	PAP	2/17/09
	DHL	2/14/08		

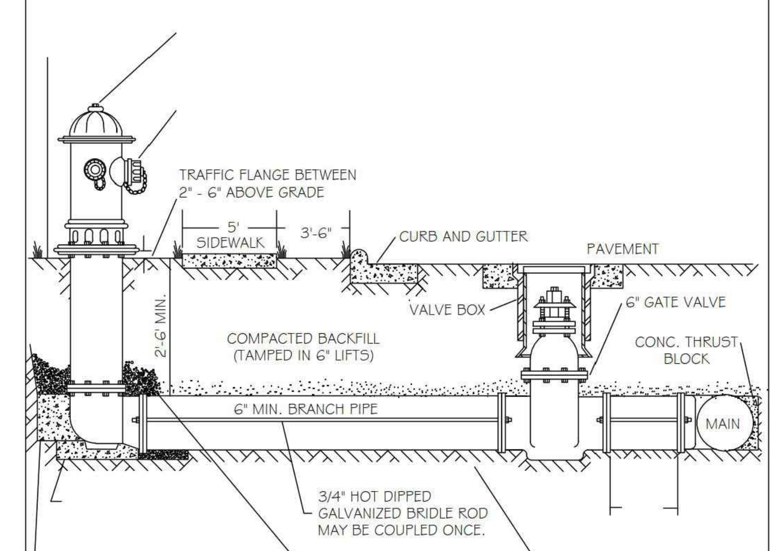

NOTES:
1. FIRE HYDRANT SHALL BE AS MANUFACTURED: MUELLER, AMERICAN DARLING, KENNEDY, M&H, WATEROUS, CLOW, EAST JORDAN IRON WORKS, OR US PIPE.
2. BRANCH PIPE SHALL BE DUCTILE IRON AWWA C150-96
3. 6" GATE VALVE SHALL BE AWWA C500-86 OPEN LEFT
4. STEEL RODS AND BOLTS SHALL BE $\frac{3}{4}$" HOT DIPPED GALVANIZED
5. FIRE HYDRANTS WILL BE INSTALLED IN TRUE VERTICAL POSITION RODS SHALL NOT BE COUPLED MORE THAN ONCE. IF THE LENGTH FROM THE VALVE TO THE HYDRANT EXCEEDS 20' THEN A MECHANICAL RESTRAINING GLAND WITH A REBAR CAGE SHALL BE INSTALLED NO MORE THAN 10' FROM HYDRANT AND POURED IN CONCRETE. FIRE HYDRANTS TO BE LOCATED IN ROW OR 2 FOOT EASEMENT ADJACENT TO ROW

ANYTIME SITE WORK, CONSTRUCTION, ROAD WORK, OR ANY OTHER WORK CHANGES THE GRADE OF THE FIRE HYDRANT, THE PERSON RESPONSIBLE FOR THE WORK IS RESPONSIBLE FOR ADJUSTING THE FIRE HYDRANT TO STAY WITHIN COMPLIANCE.

CITY OF RALEIGH
DEPARTMENT OF PUBLIC UTILITIES
STANDARD FIRE HYDRANT INSTALLATION DETAIL

DWG. NO.	REVISIONS	DATE	REVISIONS	DATE
W-4a	ABB	4-6-04		

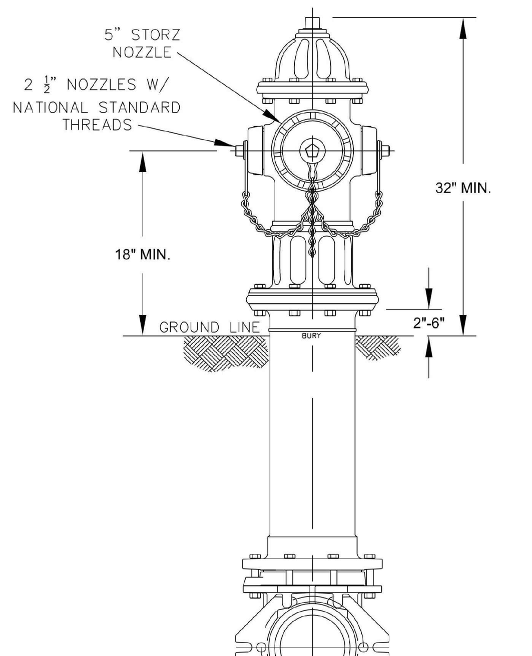

NOTES:
1. ALL PUBLIC FIRE HYDRANTS IN THE CITY OF RALEIGH AND THE MERGER TOWNS OF GARNER, ROLESVILLE, WAKE FOREST, KNIGHTDALE, WENDELL AND ZEBULON SHALL BE PAINTED CHROME YELLOW WITH HIGH REFLECTIVE ALUMINUM SILVER CAPS, BONNETS AND OPERATING NUTS.
2. ALL PRIVATE FIRE HYDRANTS SHALL BE RED.

CITY OF RALEIGH
DEPARTMENT OF PUBLIC UTILITIES
RALEIGH, GARNER, KNIGHTDALE, ROLESVILLE, WAKE FOREST, WENDELL & ZEBULON
STANDARD FIRE HYDRANT WITH 5" STORZ PUMPER NOZZLE

DWG. NO.	REVISIONS	DATE	REVISIONS	DATE
W-5	MAB	6-30-16		
	KAT	9-15-17		

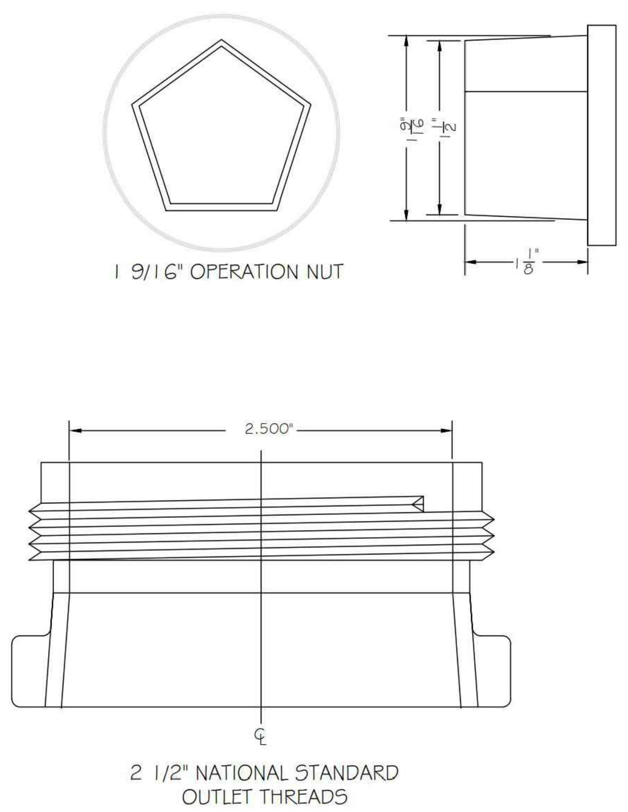

CITY OF RALEIGH
DEPARTMENT OF PUBLIC UTILITIES
HYDRANT OPERATING NUT AND 2 1/2" OUTLET THREADS

DWG. NO.	REVISIONS	DATE	REVISIONS	DATE
W-6	RRH	3-31-00	DHL	2-18-08
	A.B.B	4-13-04	J.P.S	11-1-10

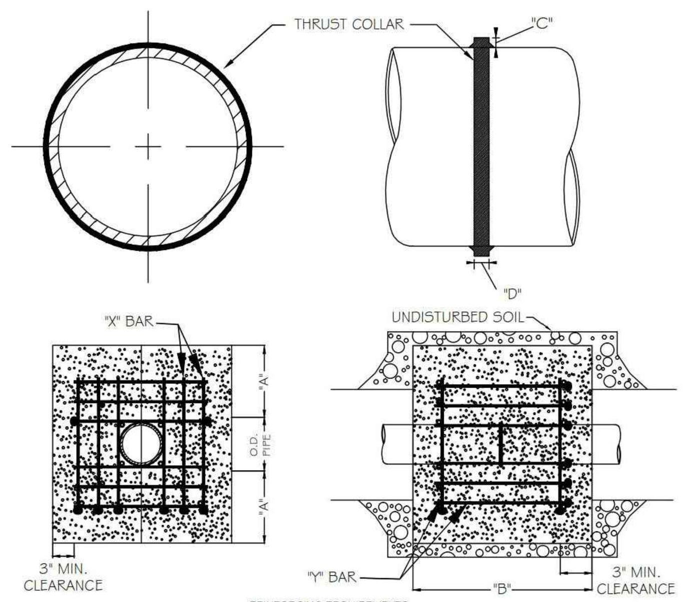

REINFORCING REQUIREMENTS

I.D. PIPE	REBAR SIZE	"X" BAR LENGTH	"X" BAR WEIGHT	"Y" BAR LENGTH	"Y" BAR WEIGHT	NO. REQUIRED
6" - 36"	#5	2'-2"+ O.D. PIPE	1.043 LBS/FT	1'-1"	1.1 LBS. EACH	X-24, Y-12
48" & greater	#6	3'-0"+ O.D. PIPE	1.502 LBS/FT	1'-3"	1.9 LBS. EACH	X-24, Y-12

THRUST COLLAR, AND THRUST SCHEDULE

I.D. PIPE	"A"	"B"	"C"	"D"
6" - 16"	1'-4"	1'-7"	2"	3/8"
20" - 24"	1'-4"	1'-7"	3"	1/2"
30" - 36"	1'-4"	1'-7"	4"	5/8"
48" & greater	1'-8"	1'-9"	6"	7/8"

NOTES:
1. SEE STANDARD DETAIL W-9 FOR THRUST BLOCK LOCATIONS.
2. CONCRETE SHALL BE 3000 PSI AND TRANSIT MIXED.
3. REINFORCING BARS SHALL BE DEFORMED AND TIED TOGETHER.
4. TRENCH BOTTOM WIDTH IN VICINITY OF THRUST BLOCK INSTALLATION SHALL BE THE MINIMUM WIDTH AS SHOWN ON STANDARD DETAIL W-3.
5. BACKFILL TAMPED IN 6" LIFTS PER STANDARD DETAIL W-3.
6. THRUST COLLAR MUST BE FACTORY WELDED ON BOTH SIDES ALONG BOTH EDGES OF COLLAR AROUND CIRCUMFERENCE.

CITY OF RALEIGH
DEPARTMENT OF PUBLIC UTILITIES
THRUST BLOCKING DESIGN DATA FOR WATER MAINS

DWG. NO.	REVISIONS	DATE	REVISIONS	DATE
W-7	RRH	1-21-00	J.P.S.	11-1-10
	D.H.L.	6-18-08		

REACTION BEARING AREAS FOR HORIZONTAL WATER PIPE BENDS
BASED ON TEST PRESSURE OF 200 P.S.I.
ALL AREAS GIVEN IN SQUARE FEET.

SIZE AND DEGREE OF BEND	STATIC THRUST IN POUNDS	MODERATELY DRY CLAY 4000 LBS/FT²	SOFT CLAY 2000 LBS/FT²	1600 LBS/FT² GRAVEL / COARSE SAND	8000 LBS/FT² DRY CLAY - ALWAYS DRY	SAND, COMPACT FIRM 8000 LBS/FT²	SAND -CLEAN DRY 4000 LBS/FT²	SOIL 1000 LBS/FT² QUICKSAND - VERY POOR	ROCK - POOR 10,000 LBS/FT²
6"									
11 1/4°	1,108	1	1	1	1	1	1	2	1
22 1/2°	2,207	1	2	2	1	1	1	3	1
45°	4,328	2	3	3	1	1	2	5	1
90°	7,996	2	4	5	1	1	2	8	1
PLUG	5,655	2	3	4	1	1	2	6	1
8"									
11 1/4°	1,970	1	1	2	1	1	1	2	1
22 1/2°	3,922	1	2	3	1	1	1	4	1
45°	7,694	2	4	5	1	1	2	8	1
90°	14,215	4	8	9	2	2	4	15	2
PLUG	10,053	3	5	6	2	2	3	10	1
12"									
11 1/4°	4,433	2	3	3	1	1	2	5	1
22 1/2°	8,826	3	5	6	2	2	3	9	1
45°	17,312	5	9	11	3	3	5	18	2
90°	31,983	8	16	19	4	4	8	32	4
PLUG	22,619	6	12	14	3	3	6	23	3
16"									
11 1/4°	7,881	2	4	5	1	1	2	8	1
22 1/2°	15,691	4	8	10	2	2	4	16	2
45°	30,779	8	16	19	4	4	8	31	4
90°	56,861	15	29	35	8	8	15	57	6
PLUG	40,213	10	21	25	5	5	10	41	5

REACTION BEARING AREAS ARE IN SQUARE FEET MEASURED IN A VERTICAL PLANE IN THE TRENCH SIDE AT AN ANGLE OF 90° TO THE THRUST VECTOR.

USE 6" - 90 BEND VALUE FOR HYDRANTS FOR ADDITIONAL SAFETY FACTOR.

CITY OF RALEIGH
DEPARTMENT OF PUBLIC UTILITIES
THRUST BLOCKING DESIGN QUANTITY TABLE

DWG. NO.	REVISIONS	DATE	REVISIONS	DATE
W-10	D.W.C.	6-23-99		

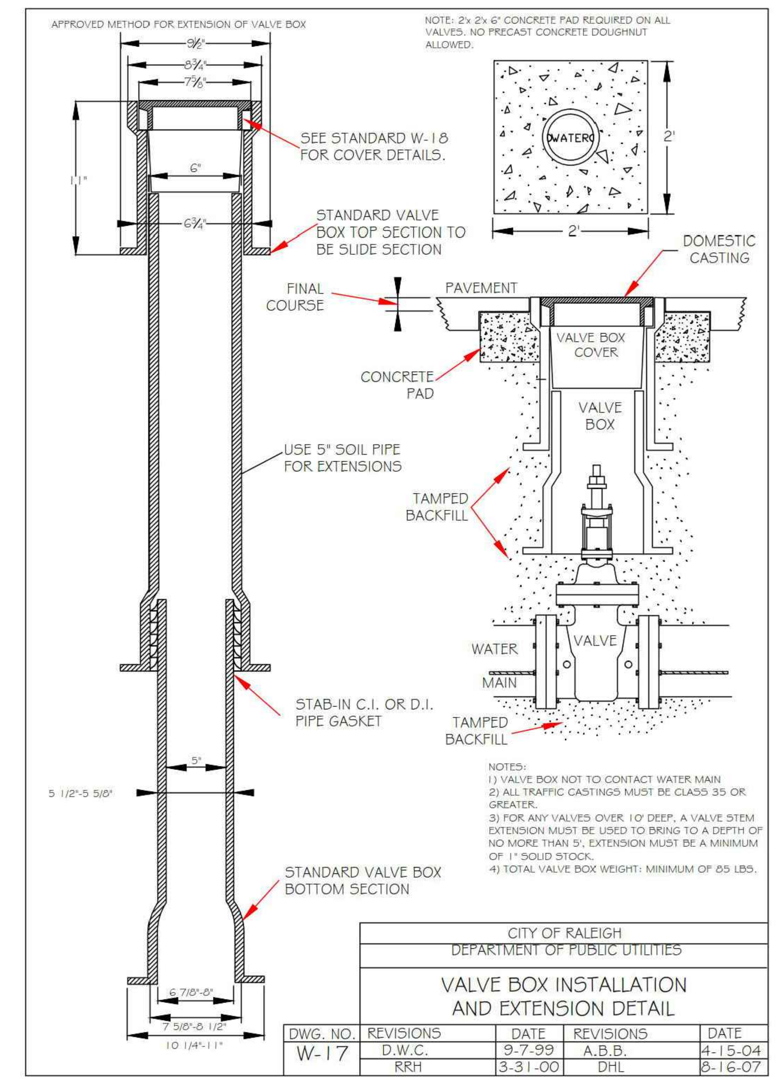

NOTES:
1) VALVE BOX NOT TO CONTACT WATER MAIN
2) ALL TRAFFIC CASTINGS MUST BE CLASS 35 OR GREATER.
3) FOR ANY VALVES OVER 10' DEEP, A VALVE STEM EXTENSION MUST BE USED TO BRING TO A DEPTH OF NO MORE THAN 5'. EXTENSION MUST BE A MINIMUM OF 1" SOLID STOCK.
4) TOTAL VALVE BOX WEIGHT: MINIMUM OF 85 LBS.

CITY OF RALEIGH
DEPARTMENT OF PUBLIC UTILITIES
VALVE BOX INSTALLATION AND EXTENSION DETAIL

DWG. NO.	REVISIONS	DATE	REVISIONS	DATE
W-17	D.W.C.	9-7-99	A.B.B.	4-15-04
	RRH	3-31-00	DHL	8-16-07

REACTION BEARING AREAS FOR HORIZONTAL WATER PIPE BENDS
BASED ON TEST PRESSURE OF 200 P.S.I.
ALL AREAS GIVEN IN SQUARE FEET.

SIZE AND DEGREE OF BEND	STATIC THRUST IN POUNDS	MODERATELY DRY CLAY 4000 LBS/FT²	SOFT CLAY 2000 LBS/FT²	GRAVEL/COARSE SAND 1600LBS/FT²	8000 LBS/FT² DRY CLAY - ALWAYS DRY	SAND, COMPACT FIRM 8000 LBS/FT²	SAND -CLEAN DRY 4000 LBS/FT²	SOIL 1000 LBS/FT² QUICKSAND - VERY POOR	ROCK - POOR 10,000 LBS/FT²
24"									
11 1/4°	17,734	5	9	11	3	3	5	18	2
22 1/2°	35,305	9	18	22	5	5	9	36	4
45°	69,252	18	35	42	9	9	18	70	7
90°	127,936	32	64	77	16	16	32	128	13
PLUG	90,478	23	46	55	12	12	23	91	10
30"									
11 1/4°	27,709	7	14	17	4	4	7	2	3
22 1/2°	55,163	14	28	34	7	7	14	56	6
45°	108,206	28	55	65	14	14	28	109	11
90°	199,900	50	100	120	25	25	50	200	20
PLUG	141,372	36	71	85	18	18	36	142	15
36"									
11 1/4°	39,901	10	20	24	5	5	10	40	4
22 1/2°	79,439	20	40	48	10	10	20	30	8
45°	155,816	39	78	94	20	20	39	156	16
90°	287,855	72	144	172	36	36	72	288	29
PLUG	203,575	51	102	122	26	26	51	204	21
48"									
11 1/4°	70,935	18	36	43	9	9	18	71	8
22 1/2°	141,218	36	71	85	18	18	36	142	15
45°	277,007	70	139	166	35	35	70	277	28
90°	511,742	128	256	320	64	64	128	512	52
PLUG	361,911	91	181	217	46	46	91	362	37

REACTION BEARING AREAS ARE IN SQUARE FEET MEASURED IN A VERTICAL PLANE IN THE TRENCH SIDE AT AN ANGLE OF 90° TO THE THRUST VECTOR.

USE 6" - 90° BEND VALUE FOR HYDRANTS FOR ADDITIONAL SAFETY FACTOR.

CITY OF RALEIGH
DEPARTMENT OF PUBLIC UTILITIES
THRUST BLOCKING DESIGN QUANTITY TABLE

DWG. NO.	REVISIONS	DATE	REVISIONS	DATE
W-11	D.W.C.	6-23-99		

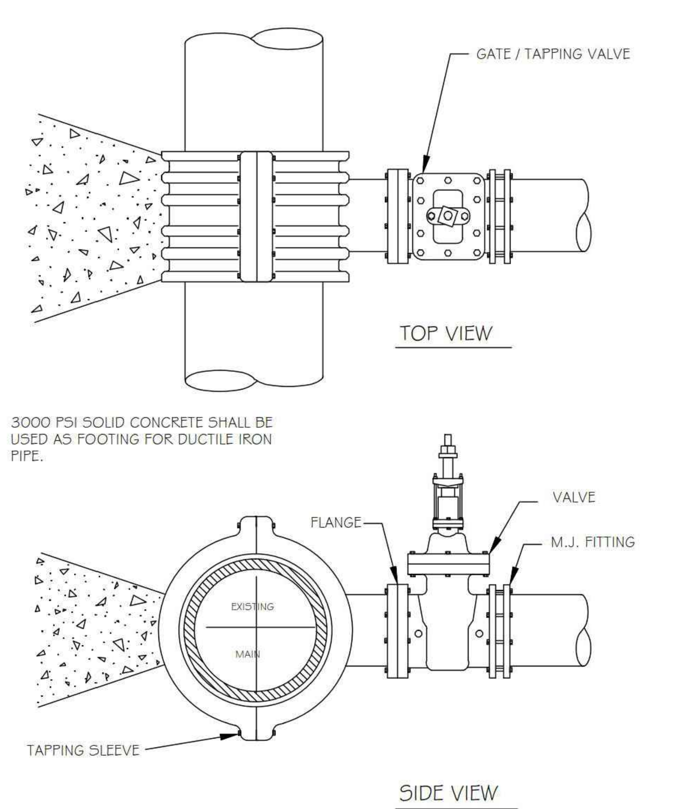

NOTES:
1. CONCRETE SHALL NOT CONTACT BOLTS OR ENDS OF MECHANICAL JOINT FITTINGS.
2. SEE STANDARD REACTION BLOCK TABLES, W-10 AND W-11 FOR AREA OF CONCRETE REQUIRED.

CITY OF RALEIGH
DEPARTMENT OF PUBLIC UTILITIES
4" - 24" STANDARD TAPPING SLEEVE AND VALVE ASSEMBLY

DWG. NO.	REVISIONS	DATE	REVISIONS	DATE
W-14	Y.C.A.	12-31-91	RRH	3-31-00
	D.W.C.	9-7-99	J.P.S.	11-1-10

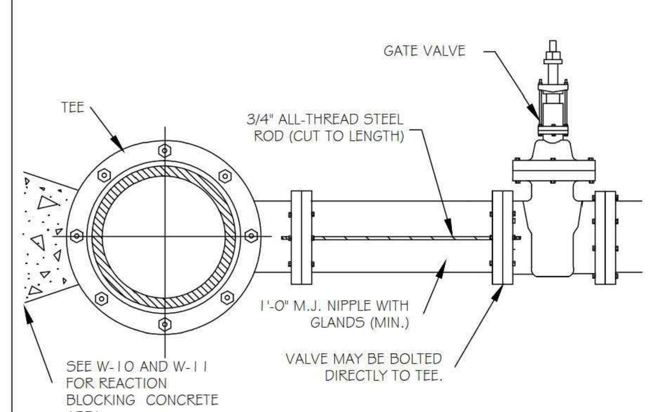

ROD REQUIREMENTS

NO. OF RODS	BRANCH SIZE
4"	2
6"	2
8"	4
12"	4
16"	6
24"	6
30"	8
36"	8

NOTES:
1. STEEL RODS AND BOLTS SHALL BE 3/4" HOT DIPPED GALVANIZED.
2. SEE STANDARD THRUST BLOCK. TABLES W-10 AND W-11 FOR CONCRETE.
3. CONCRETE SHALL NOT CONTACT BOLTS OR ENDS OF MECHANICAL FITTINGS.
4. THIS RODDING REQUIREMENT DOES NOT APPLY TO FIRE HYDRANTS.

CITY OF RALEIGH
DEPARTMENT OF PUBLIC UTILITIES
VALVE RESTRAINT AT TEES AND CROSSES FOR LINES (4"-24")

DWG. NO.	REVISIONS	DATE	REVISIONS	DATE
W-15	RRH	3-31-00	D.H.L.	6-16-08
	A.B.B.	4-19-04	J.P.S.	11-1-10

CONCURRENT REVIEW APPROVAL

CITY OF RALEIGH – PLANS AUTHORIZED FOR CONSTRUCTION

Plans for the proposed use have been reviewed for general compliance with applicable codes. This limited review, and authorization for construction is not to be considered to represent total compliance with all legal requirements for development and construction. The property owner, design consultants, and contractors are each responsible for compliance with all applicable City, State and Federal laws. This specific authorization below is not a permit, nor shall it be construed to permit any violation of City, State or Federal Law. All Construction must be in accordance with all Local, State, and Federal Rules and Regulations.

PUBLIC UTILITIES ______________________________

FINAL DRAWING - NOT RELEASED FOR CONSTRUCTION

M:\Projects\AWH\AWH-20000\04-Production\Engineering\CD PKG 3\Current Drawings\AWH20000-CD-Pkg-03-D1.dwg, 12/13/2023 11:14:53 AM, Tommy Dabolt

MCADAMS
The John R. McAdams Company, Inc.
2905 Meridian Parkway
Durham, NC 27713

phone 919. 361. 5000
fax 919. 361. 2269
license number: C-0293, C-187

www.mcadamsco.com

CLIENT

ASHTON RALEIGH RESIDENTIAL, LLC.
900 RIDGEFIELD DRIVE, SUITE 335
RALEIGH, NORTH CAROLINA 27609
PHONE: 919. 422. 7663
CONTACT: BOB MISHLER

ASHTON WOODS

THE POINT PHASES 8 AND 14

CONSTRUCTION DRAWINGS - PACKAGE 3
EAST YOUNG STREET
TOWN OF ROLESVILLE, WAKE FOREST TOWNSHIP, WAKE COUNTY, NORTH CAROLINA

CD XX-XX

NORTH CAROLINA PROFESSIONAL SEAL 22630 ENGINEER WILLIAM T. O'DANIEL
PRELIMINARY NOT FOR CONSTRUCTION

REVISIONS

NO. DATE

PLAN INFORMATION

PROJECT NO.	AWH-20000
FILENAME	AWH20000-CD-PKG-03-D1
CHECKED BY	WTO
DRAWN BY	TKD
SCALE	N.T.S.
DATE	12. 13. 2023

SHEET

WATER DETAILS

C8.04

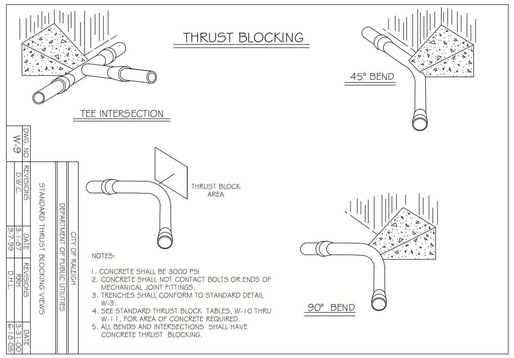

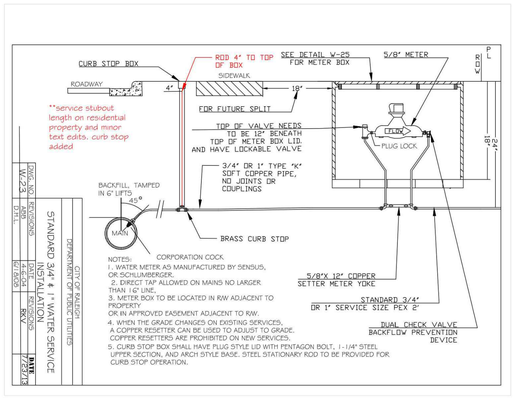

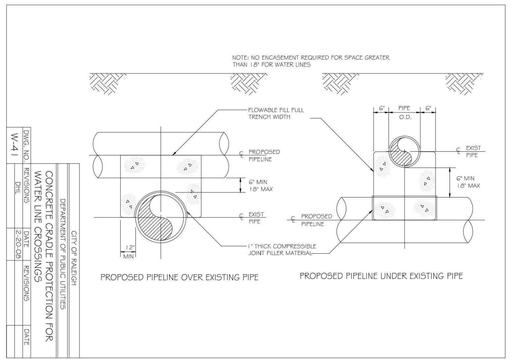

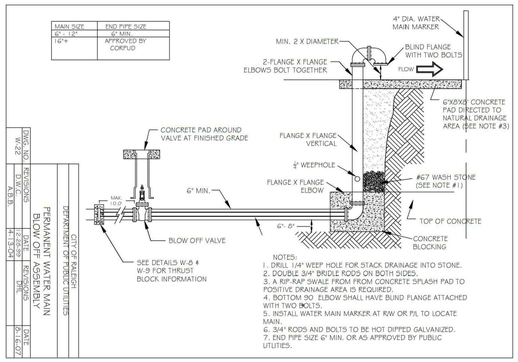

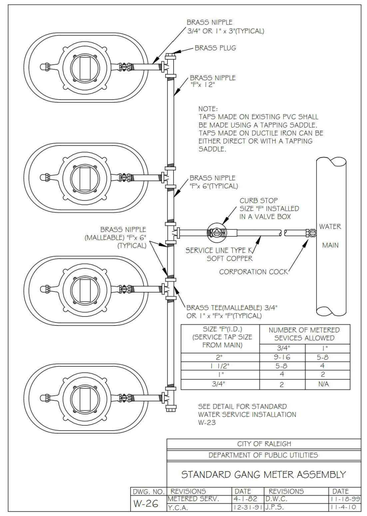

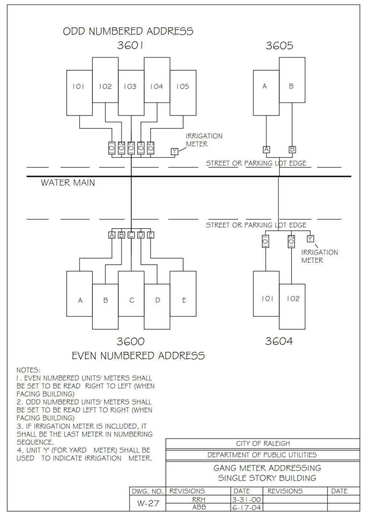

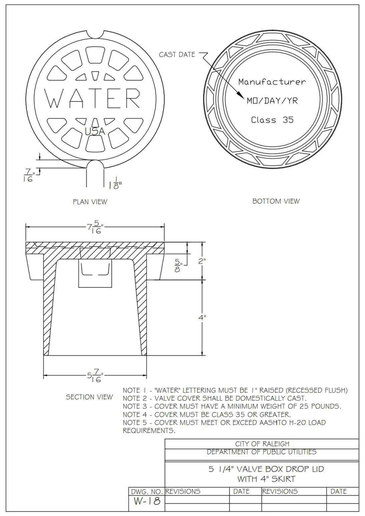

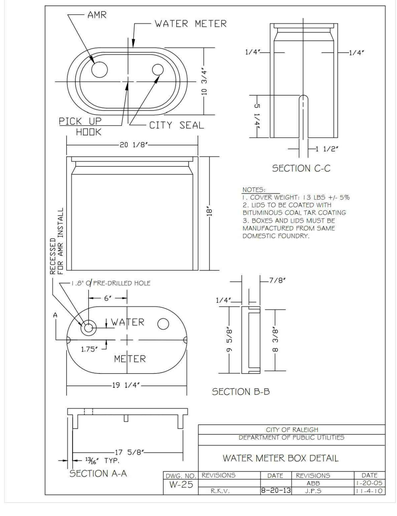

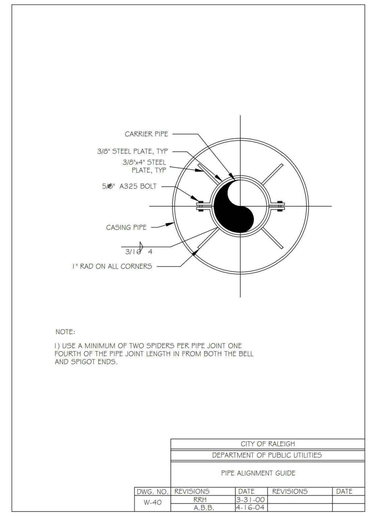

TYPICAL GRASSPAVE2 DETAIL

CHOOSE THIS PRODUCT FOR REINFORCING GRASS WEARING SURFACES

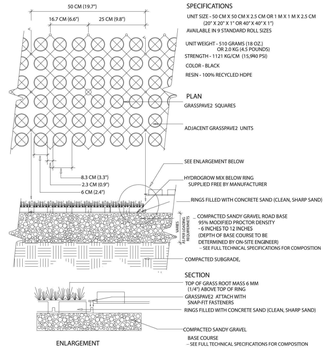

NOTE: GRASS/PLANT TYPES SHALL BE SPECIFIED BY A LANDSCAPE ARCHITECT OR LANDSCAPE DESIGNER.

TYPICAL GRASSPAVE2 DETAIL

CHOOSE THIS PRODUCT FOR REINFORCING GRASS WEARING SURFACES

1 OF 1

NOT TO SCALE

Invisible Structures, Inc. GP2DETAILS.DWG

16265 E. 32RD DR., SUITE 20 AURORA, COLORADO 80011 800-233-1319 OR 303-233-8383 FAX 800-233-1322 OR 303-233-8282 www.invisiblestructures.com rev. 1/18

GRASSPAVE2 Permeable/Porous Paver Edging Detail

Use this detail for edging Grasspave2 areas

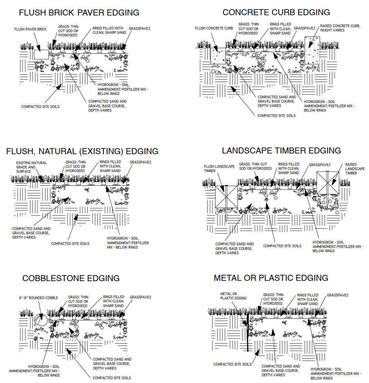

NOT TO SCALE

GRASSPAVE2 Invisible Structures, Inc. GP2EDGING01.dwg

1 OF 1

GRASSPAVE2 Firelane Detail

Use this detail for delineating a Grasspave2 firelane

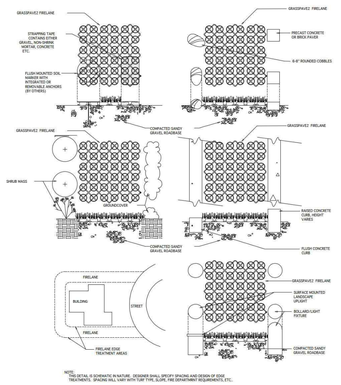

NOTE: DETAIL IS SCHEMATIC IN NATURE. DESIGNER SHALL SPECIFY SPACING AND DESIGN OF EDGE TREATMENTS. SPACING WILL VARY WITH TURF TYPE, SLOPE, FIRE DEPARTMENT REQUIREMENTS, ETC.

NOT TO SCALE

GRASSPAVE2 Invisible Structures, Inc. GP2Firelane1.dwg

1 OF 1

INVISIBLE STRUCTURES 303-233-8383 www.invisiblestructures.com V4.1

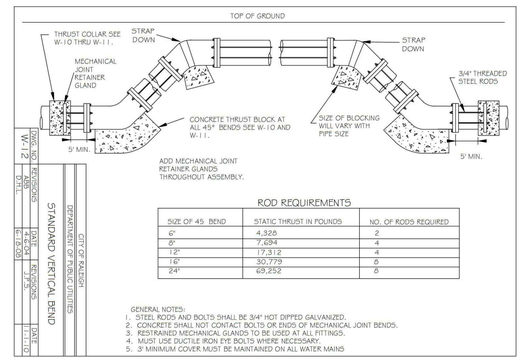

CONCURRENT REVIEW APPROVAL

CITY OF RALEIGH – PLANS AUTHORIZED FOR CONSTRUCTION

Plans for the proposed use have been reviewed for general compliance with applicable codes. This limited review, and authorization for construction is not to be considered to represent total compliance with all legal requirements for development and construction. The property owner, design consultants, and contractors are each responsible for compliance with all applicable City, State and Federal laws. This specific authorization below is not a permit, nor shall it be construed to permit any violation of City, State or Federal Law. All Construction must be in accordance with all Local, State, and Federal Rules and Regulations.

PUBLIC UTILITIES_____

FINAL DRAWING - NOT RELEASED FOR CONSTRUCTION

McADAMS
The John R. McAdams Company, Inc.
2905 Meridian Parkway
Durham, NC 27713

phone 919. 361. 5000
fax 919. 361. 2269
license number: C-0293, C-187

www.mcadamsco.com

CLIENT

ASHTON RALEIGH RESIDENTIAL, LLC.
900 RIDGEFIELD DRIVE, SUITE 335
RALEIGH, NORTH CAROLINA 27609
PHONE: 919. 422. 7663
CONTACT: BOB MISHLER

ASHTON WOODS

THE POINT
PHASES 8 AND 14
CONSTRUCTION DRAWINGS - PACKAGE 3
EAST YOUNG STREET
TOWN OF ROLESVILLE, WAKE FOREST TOWNSHIP, WAKE COUNTY, NORTH CAROLINA

CD XX-XX

NORTH CAROLINA PROFESSIONAL SEAL 22630 ENGINEER WILLIAM T. O'DANIEL NOT FOR CONSTRUCTION

REVISIONS

NO. DATE

PLAN INFORMATION

PROJECT NO.	AWH-20000
FILENAME	AWH20000-CD-PKG-03-D1
CHECKED BY	WTO
DRAWN BY	TKD
SCALE	N.T.S.
DATE	12. 13. 2023

SHEET

WATER DETAILS

C8.05

X:\Projects\AWH\AWH-20000\04-Production\Engineering\CD PKG 3\Current Drawings\AWH20000-CD-Pkg-03-D1.dwg, 12/13/2023 11:15:11 AM, Tommy Daboll

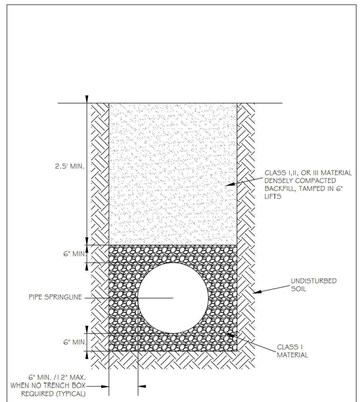

CITY OF RALEIGH				
DEPARTMENT OF PUBLIC UTILITIES				
STANDARD BEDDING DETAILS FOR CCFRPM PIPES				
DWG. NO.	REVISIONS	DATE	REVISIONS	DATE
S-1	J.P.S.	10-6-10		

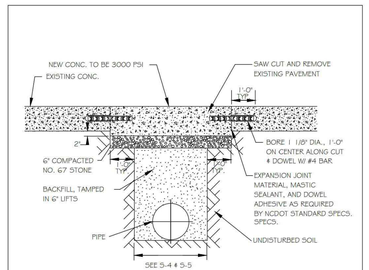

NOTES:
1. See City of Raleigh standards for trenches and pipe bedding (S-4 & S-5) for additional details.
2. Pavement cuts over 5'-0" in width shall be reinforced to N.C.D.O.T. standards.
3. Pavement cuts shall be made with an appropriate saw cut machine.
4. Pavement cuts within NCDOT ROW shall conform to the approved on site encroachment permit.

CITY OF RALEIGH				
DEPARTMENT OF PUBLIC UTILITIES				
STANDARD CONCRETE PAVEMENT PATCH DETAIL				
DWG. NO.	REVISIONS	DATE	REVISIONS	DATE
S-2	D.W.C.	6-23-99	A.B.B.	4-19-04
	KRH	3-30-00	J.P.S.	10-6-10

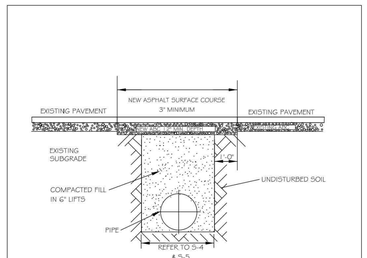

NOTES:
1. IN NCDOT MAINTAINED ROADWAYS ENCROACHMENT PAVEMENT PATCH REQUIREMENTS SHALL TAKE PRECEDENCE.
2. THE PAVEMENT CUT SHALL BE DEFINED BY A STRAIGHT EDGE AND CUT WITH AN APPROPRIATE SAWCUT MACHINE.
3. THE TRENCH SUBGRADE MATERIAL SHALL BE BACKFILLED WITH SUITABLE MATERIAL AND COMPACTED TO A DENSITY OF AT LEAST 95% OF THAT OBTAINED BY COMPACTING A SAMPLE OF THE MATERIAL IN ACCORDANCE WITH AASHTO T-99 AS MODIFIED BY NCDOT.
4. THE FINAL 1' OF FILL SHALL CONSIST OF ABC MATERIAL COMPACTED TO A DENSITY EQUAL TO 100% OF THAT OBTAINED BY COMPACTING A SAMPLE OF THE MATERIAL IN ACCORDANCE WITH AASHTO T-80 AS MODIFIED BY NCDOT.
5. THE ENTIRE THICKNESS AND VERTICAL EDGE OF CUT SHALL BE TACKED.
6. THE SAME DEPTH OF PAVEMENT MATERIAL WHICH EXISTS SHALL BE REINSTALLED, BUT IN NO CASE SHALL THE ASPHALT BE LESS THAN 3" THICK.
7. THE ASPHALT PAVEMENT MATERIAL SHALL BE INSTALLED AND COMPACTED THOROUGHLY WITH A SMOOTH DRUM ROLLER TO ACHIEVE A SMOOTH LEVEL PATCH.
8. REFER TO CITY OF RALEIGH STANDARDS FOR TRENCHES AND PIPE BEDDING (S-4 & S-5) FOR ADDITIONAL DETAILS.
9. NO HAND PATCHING ALLOWED.
10. PAVEMENT CUTS WITHIN NCDOT ROW SHALL CONFORM TO THE APPROVED ON SITE ENCROACHMENT PERMIT.

CITY OF RALEIGH				
DEPARTMENT OF PUBLIC UTILITIES				
STANDARD ASPHALT PAVEMENT PATCH DETAIL				
DWG. NO.	REVISIONS	DATE	REVISIONS	DATE
S-3	D.W.C.	11-1-99	A.B.B.	4-19-04
	KRH	3-30-00	J.P.S.	10-6-10

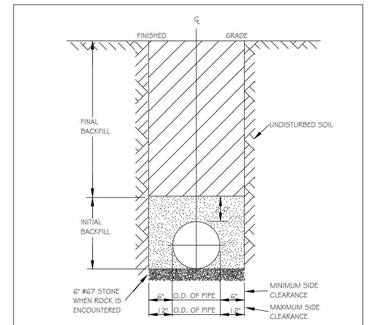

NOTES:
1. TRENCHES REQUIRING SHORING AND BRACING, DIMENSIONS SHALL BE TAKEN FROM THE INSIDE FACE OF THE SHORING AND BRACING.
2. NO ROCKS OR BOULDERS 4" OR LARGER TO BE USED IN INITIAL BACKFILL.
3. ALL BACKFILL MATERIAL SHALL BE SUITABLE NATIVE MATERIAL.
4. BACKFILL SHALL BE TAMPED IN 6" LIFTS IN TRAFFIC AREAS, 12" IN NON-TRAFFIC AREAS.
5. ACHIEVE 80% COMPACTION IN NON-TRAFFIC AREAS, AND 95% COMPACTION IN TRAFFIC AREAS.
6. IF IN EASEMENT 4" TOPSOIL, AND 12" CLEAN SELECT FILL MAY BE REQUIRED.
7. NO BOULDERS 6" IN DIAMETER OR GREATER ALLOWED IN FINAL BACKFILL.

CITY OF RALEIGH				
DEPARTMENT OF PUBLIC UTILITIES				
TRENCH BOTTOM DIMENSIONS & BACKFILLING REQUIREMENTS FOR DUCTILE IRON				
DWG. NO.	REVISIONS	DATE	REVISIONS	DATE
S-4	D.W.C.	9-3-99		
	KRH	3-30-00		

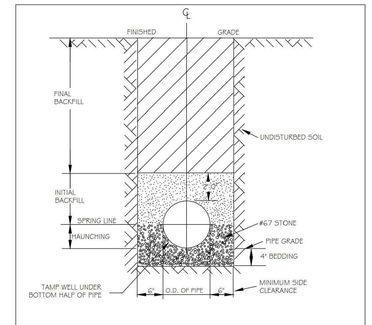

TYPICAL TRENCH BOTTOM DIMENSIONS FOR SDR 35 PVC GRAVITY PIPE

NOTES:
1. FOR TRENCHES REQUIRING SHORING AND BRACING, DIMENSIONS SHALL BE TAKEN FROM THE INSIDE FACE OF THE SHORING AND BRACING.
2. NO ROCKS OR BOULDERS 4" OR LARGER TO BE USED IN INITIAL BACKFILL.
3. ALL BACKFILL MATERIAL SHALL BE SUITABLE NATIVE MATERIAL.
4. BACKFILL SHALL BE TAMPED IN 6" LIFTS IN TRAFFIC AREAS, 12" IN NON-TRAFFIC AREAS.

CITY OF RALEIGH				
DEPARTMENT OF PUBLIC UTILITIES				
TRENCH BOTTOM DIMENSIONS AND BACKFILLING REQUIREMENTS FOR PVC GRAVITY SEWER MAIN				
DWG. NO.	REVISIONS	DATE	REVISIONS	DATE
S-5	TO NOTES	3-1-07	D.W.C.	9-3-99
		7-2-02	KRH	3-30-00

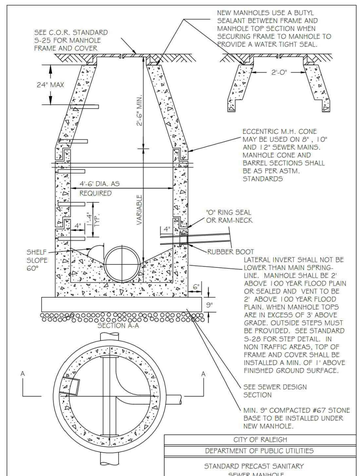

CITY OF RALEIGH				
DEPARTMENT OF PUBLIC UTILITIES				
STANDARD PRECAST SANITARY SEWER MANHOLE				
DWG. NO.	REVISIONS	DATE	REVISIONS	DATE
S-20	Y.C.A.	12-31-92	ABB	2-2-05
	KRH	3-30-00	D.H.L.	6-16-08

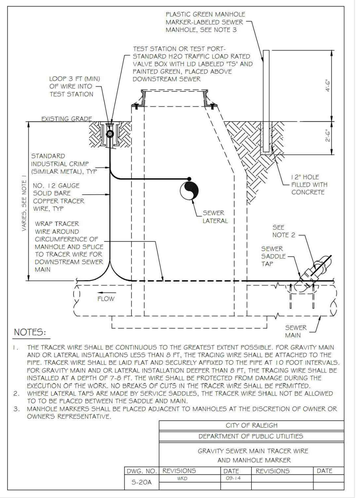

NOTES:
1. THE TRACER WIRE SHALL BE CONTINUOUS TO THE GREATEST EXTENT POSSIBLE. FOR GRAVITY MAIN AND OR LATERAL INSTALLATIONS LESS THAN 6 FT, THE TRACING WIRE SHALL BE ATTACHED TO THE PIPE. TRACER WIRE SHALL BE LAID FLAT AND SECURELY AFIXED TO THE PIPE AT 10 FOOT INTERVALS. FOR GRAVITY MAIN AND OR LATERAL INSTALLATION DEEPER THAN 6 FT, THE TRACING WIRE SHALL BE INSTALLED AT A DEPTH OF 7-8 FT. THE WIRE SHALL BE PROTECTED FROM DAMAGE DURING THE EXECUTION OF THE WORK. NO BREAKS OF CUTS IN THE TRACER WIRE SHALL BE PERMITTED.
2. WHERE LATERAL TAPS ARE MADE BY SERVICE SADDLES, THE TRACER WIRE SHALL NOT BE ALLOWED TO TO BE PLACED BETWEEN THE SADDLE AND MAIN.
3. MANHOLE MARKERS SHALL BE PLACED ADJACENT TO MANHOLES AT THE DISCRETION OF OWNER OR OWNERS REPRESENTATIVE.

CITY OF RALEIGH				
DEPARTMENT OF PUBLIC UTILITIES				
GRAVITY SEWER MAIN TRACER WIRE AND MANHOLE MARKER				
DWG. NO.	REVISIONS	DATE	REVISIONS	DATE
S-20A	MKD	08-14		

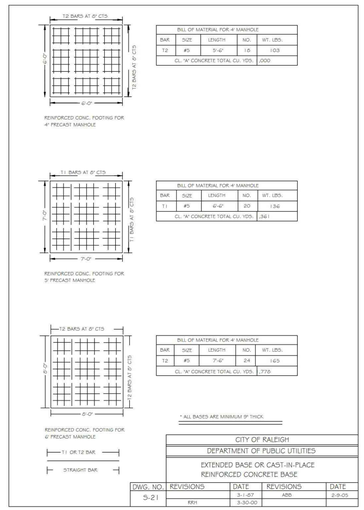

BILL OF MATERIAL FOR 4' MANHOLE				
BAR	SIZE	LENGTH	NO.	WT. LBS.
12	#5	5'-6"	15	103
CL. 'A' CONCRETE TOTAL CU. YDS. 1.000				

BILL OF MATERIAL FOR 5' MANHOLE				
BAR	SIZE	LENGTH	NO.	WT. LBS.
11	#5	6'-6"	20	134
CL. 'A' CONCRETE TOTAL CU. YDS. 1.54				

BILL OF MATERIAL FOR 6' MANHOLE				
BAR	SIZE	LENGTH	NO.	WT. LBS.
12	#5	7'-6"	24	165
CL. 'A' CONCRETE TOTAL CU. YDS. 2.76				

* ALL BASES ARE MINIMUM 9" THICK.

CITY OF RALEIGH				
DEPARTMENT OF PUBLIC UTILITIES				
EXTENDED BASE OR CAST-IN-PLACE REINFORCED CONCRETE BASE				
DWG. NO.	REVISIONS	DATE	REVISIONS	DATE
S-21		3-1-07	ABB	2-9-05
	KRH	3-30-00		

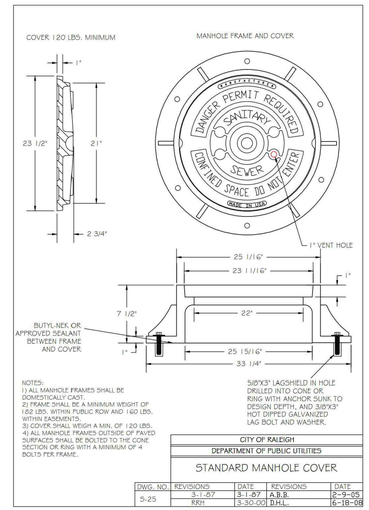

NOTES:
1) ALL MANHOLE FRAMES SHALL BE DOMESTICALLY CAST.
2) FRAME SHALL BE A MINIMUM WEIGHT OF 162 LBS. WITHIN PUBLIC ROW AND 160 LBS. WITHIN EASEMENTS.
3) COVER SHALL WEIGH A MIN. OF 120 LBS.
4) ALL MANHOLE FRAMES OUTSIDE OF PAVED SURFACES SHALL BE BOLTED TO THE CONE SECTION OR RING WITH A MINIMUM OF 4 BOLTS PER FRAME.

CITY OF RALEIGH				
DEPARTMENT OF PUBLIC UTILITIES				
STANDARD MANHOLE COVER				
DWG. NO.	REVISIONS	DATE	REVISIONS	DATE
S-25		3-1-07	A.B.B.	2-9-05
	KRH	3-30-00	D.H.L.	6-18-08

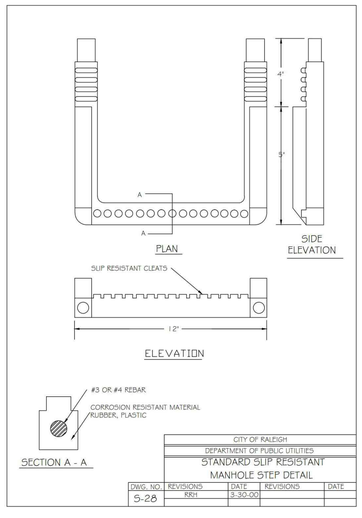

CITY OF RALEIGH				
DEPARTMENT OF PUBLIC UTILITIES				
STANDARD SLIP RESISTANT MANHOLE STEP DETAIL				
DWG. NO.	REVISIONS	DATE	REVISIONS	DATE
S-28	KRH	3-30-00		

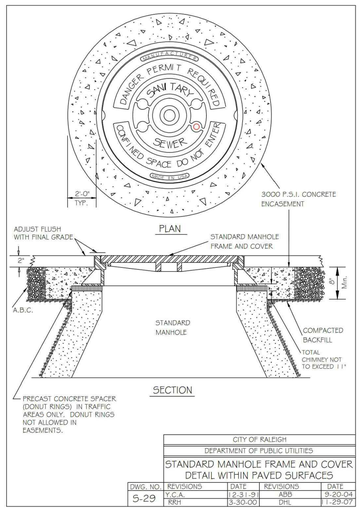

CITY OF RALEIGH				
DEPARTMENT OF PUBLIC UTILITIES				
STANDARD MANHOLE FRAME AND COVER DETAIL WITHIN PAVED SURFACES				
DWG. NO.	REVISIONS	DATE	REVISIONS	DATE
S-29	Y.C.A.	12-31-97	ABB	9-20-04
	KRH	3-30-00	DHL	7-29-07

McADAMS
The John R. McAdams Company, Inc.
2905 Meridian Parkway
Durham, NC 27713

phone 919. 361. 5000
fax 919. 361. 2269
license number: C-0293, C-187

www.mcadamsco.com

CLIENT

ASHTON RALEIGH RESIDENTIAL, LLC.
900 RIDGEFIELD DRIVE, SUITE 335
RALEIGH, NORTH CAROLINA 27609
PHONE: 919. 422. 7663
CONTACT: BOB MISHLER

ASHTON WOODS

THE POINT
PHASES 8 AND 14
CONSTRUCTION DRAWINGS - PACKAGE 3
EAST YOUNG STREET
TOWN OF ROLESVILLE, WAKE FOREST TOWNSHIP, WAKE COUNTY, NORTH CAROLINA

CD XX-XX

NORTH CAROLINA PROFESSIONAL ENGINEER SEAL 22630 WILLIAM T. O'DANIEL
NOT FOR CONSTRUCTION

REVISIONS

NO.	DATE

PLAN INFORMATION

PROJECT NO.	AWH-20000
FILENAME	AWH20000-CD-PKG-03-D1
CHECKED BY	WTO
DRAWN BY	TKD
SCALE	N.T.S.
DATE	12. 13. 2023

SHEET

SANITARY SEWER DETAILS

C8.06

CONCURRENT REVIEW APPROVAL

CITY OF RALEIGH – PLANS AUTHORIZED FOR CONSTRUCTION

Plans for the proposed use have been reviewed for general compliance with applicable codes. This limited review, and authorization for construction is not to be considered to represent total compliance with all legal requirements for development and construction. The property owner, design consultants, and contractors are each responsible for compliance with all applicable City, State and Federal laws. This specific authorization below is not a permit, nor shall it be construed to permit any violation of City, State or Federal Law. All Construction must be in accordance with all Local, State, and Federal Rules and Regulations.

PUBLIC UTILITIES_____

FINAL DRAWING - NOT RELEASED FOR CONSTRUCTION

M:\Projects\AWH\AWH-20000\04-Production\Engineering\CD PKG 3\Current Drawings\AWH20000-CD-Pkg-03-D1.dwg, 12/13/2023 11:15:30 AM, Tommy Daboll

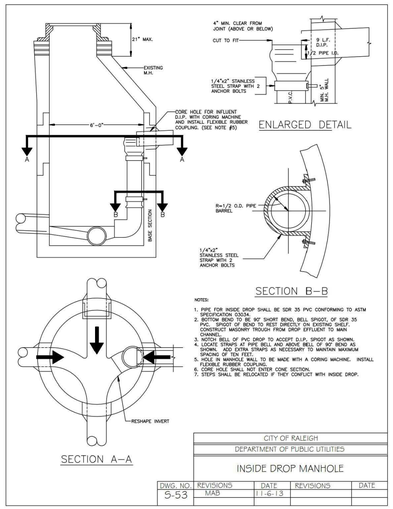
21" MAX.
EXISTING M.H.
6'-0"
CORE HOLE FOR INFLUENT D.I.P. WITH CORING MACHINE AND INSTALL FLEXIBLE RUBBER COUPLING. (SEE NOTE #5)
BASE SECTION
RESHAPE INVERT
SECTION A-A
4" MIN. CLEAR FROM JOINT (ABOVE OR BELOW)
CUT TO FIT
8 L.F. D.I.P. 1/2 PIPE I.D.
1/4"x4" STAINLESS STEEL STRAP WITH 2 ANCHOR BOLTS
ENLARGED DETAIL
R=1/2 O.D. PIPE BARREL
1/4"x4" STAINLESS STEEL STRAP WITH 2 ANCHOR BOLTS
SECTION B-B
NOTES:
1. PIPE FOR INSIDE DROP SHALL BE SDR 35 PVC CONFORMING TO ASTM SPECIFICATION D3034.
2. BOTTOM BEND TO BE 90° SHORT BEND, BELL SPIGOT, OF SDR 35 PVC. BOTTOM BEND TO BE ENCASED IN CONCRETE AND TO CONSTRUCT MASONRY TROUGH FROM DROP EFFLUENT TO MAIN CHANNEL.
3. CUT OFF BELL OF PVC DROP TO ACCEPT D.I.P. SPIGOT AS SHOWN.
4. LOCATE STRAPS AT PIPE BELL AND ABOVE BELL OF BOT BEND AS SHOWN. ADD EXTRA STRAPS AS NECESSARY TO MAINTAIN MAXIMUM SPACING OF 10 FEET.
5. HOLE IN MANHOLE WALL TO BE MADE WITH A CORING MACHINE. INSTALL FLEXIBLE RUBBER COUPLING.
6. CORE HOLE SHALL NOT ENTER CONE SECTION.
7. STEPS SHALL BE RELOCATED IF THEY CONFLICT WITH INSIDE DROP.

CITY OF RALEIGH
DEPARTMENT OF PUBLIC UTILITIES
INSIDE DROP MANHOLE

DWG. NO.	REVISIONS	DATE	REVISIONS	DATE
S-53	MAB	11-6-13		

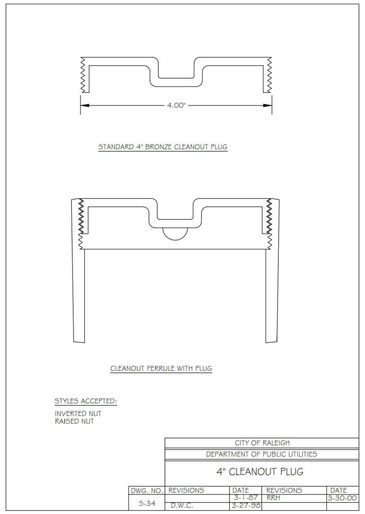

CITY OF RALEIGH
DEPARTMENT OF PUBLIC UTILITIES
4" CLEANOUT PLUG

DWG. NO.	REVISIONS	DATE	REVISIONS	DATE
S-34	D.W.C.	3-1-87 3-27-96	RRH	3-30-00

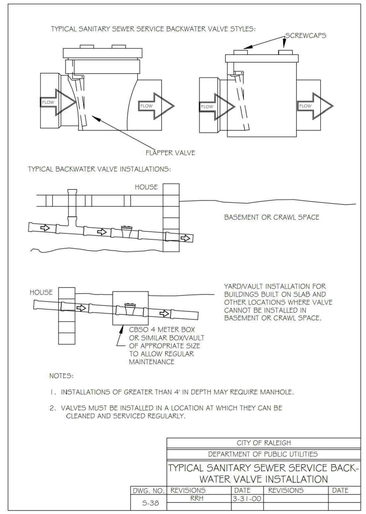

CITY OF RALEIGH
DEPARTMENT OF PUBLIC UTILITIES
TYPICAL SANITARY SEWER SERVICE BACK-WATER VALVE INSTALLATION

DWG. NO.	REVISIONS	DATE	REVISIONS	DATE
S-35	RRH	3-31-00		

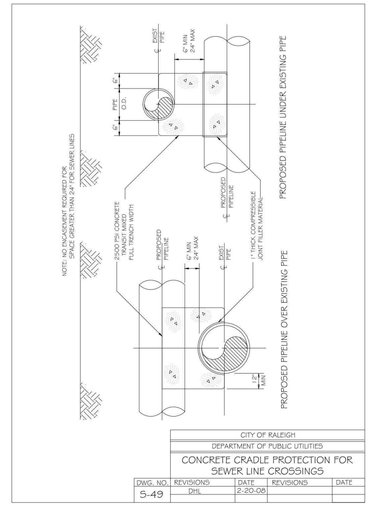

CITY OF RALEIGH
DEPARTMENT OF PUBLIC UTILITIES
CONCRETE CRADLE PROTECTION FOR SEWER LINE CROSSINGS

DWG. NO.	REVISIONS	DATE	REVISIONS	DATE
S-49	DHL	2-20-08		

CONCURRENT REVIEW APPROVAL

CITY OF RALEIGH – PLANS AUTHORIZED FOR CONSTRUCTION

Plans for the proposed use have been reviewed for general compliance with applicable codes. This limited review, and authorization for construction is not to be considered to represent total compliance with all legal requirements for development and construction. The property owner, design consultants, and contractors are each responsible for compliance with all applicable City, State and Federal laws. This specific authorization below is not a permit, nor shall it be construed to permit any violation of City, State or Federal Law. All Construction must be in accordance with all Local, State, and Federal Rules and Regulations.

PUBLIC UTILITIES _____

FINAL DRAWING - NOT RELEASED FOR CONSTRUCTION

McADAMS
The John R. McAdams Company, Inc.
2905 Meridian Parkway
Durham, NC 27713

phone 919. 361. 5000
fax 919. 361. 2269
license number: C-0293, C-187

www.mcadamsco.com

CLIENT

ASHTON RALEIGH RESIDENTIAL, LLC.
900 RIDGEFIELD DRIVE, SUITE 335
RALEIGH, NORTH CAROLINA 27609
PHONE: 919. 422. 7663
CONTACT: BOB MISHLER

ASHTON WOODS

THE POINT
PHASES 8 AND 14
CONSTRUCTION DRAWINGS - PACKAGE 3
EAST YOUNG STREET
TOWN OF ROLESVILLE, WAKE FOREST TOWNSHIP,
WAKE COUNTY, NORTH CAROLINA

CD XX-XX

REVISIONS

NO. DATE

PLAN INFORMATION

PROJECT NO.	AWH-20000
FILENAME	AWH20000-CD-PKG-03-D1
CHECKED BY	WTO
DRAWN BY	TKD
SCALE	N.T.S.
DATE	12. 13. 2023

SHEET

SANITARY SEWER DETAILS

C8.07

M:\Projects\AWH\AWH-20000\04-Production\Engineering\CD PKG 3\Current Drawings\AWH20000-CD-Pkg-03-D1.dwg, 12/13/2023 11:15:49 AM, Tommy Daboll

GENERAL NOTES

1. PRIOR TO CONSTRUCTION, ANY DISCREPANCIES IN THE PLANS AND NOTES SHALL BE BROUGHT TO THE DESIGN ENGINEER'S ATTENTION IMMEDIATELY.

2. THE FINAL CERTIFICATION FOR THIS FACILITY WILL INCLUDE A CERTIFICATION BY THE ON-SITE GEOTECHNICAL ENGINEER THAT THE PROJECT WAS CONSTRUCTED PER THE APPROVED PLANS. IT IS THE RESPONSIBILITY OF THE CONTRACTOR TO COORDINATE WITH THE ON-SITE GEOTECHNICAL ENGINEER FOR OBSERVATION AND TESTING SUCH THAT THE ON-SITE GEOTECHNICAL ENGINEER CAN CERTIFY THE CONSTRUCTION OF THE DAM EMBANKMENT AND SPILLWAY. THIS CERTIFICATION MUST ADDRESS THE TESTING FOR MATERIALS AND COMPACTION OF THE DAM EMBANKMENT AND SPILLWAY.

3. ALL CONSTRUCTION ACTIVITY RELATED TO THE PROPOSED STORMWATER CONTROL MEASURE SHALL BE PER THE DETAILS AND SPECIFICATIONS SHOWN IN THESE DRAWINGS. SOILS, COMPACTION, AND OTHER MISCELLANEOUS DETAILS AND SPECIFICATIONS MAY BE MODIFIED PER THE RECOMMENDATIONS OF THE ON-SITE GEOTECHNICAL ENGINEER. HOWEVER, PRIOR TO IMPLEMENTATION, THE DESIGN ENGINEER SHALL BE NOTIFIED OF ANY DEVIATION FROM THESE DESIGN DRAWINGS, INCLUDING SHOP DRAWINGS FOR ANY PROPOSED MODIFICATION.

4. DURING THE INITIAL STAGES OF CONSTRUCTION, THE STORMWATER CONTROL MEASURE MAY BE USED AS A SEDIMENT BASIN FOR EROSION CONTROL PURPOSES. IF SO, THE CONTRACTOR SHALL FOLLOW THE GENERAL CONSTRUCTION SEQUENCE BELOW:
   A. THE CONTRACTOR SHALL CONSTRUCT THE ENTIRE FACILITY (PERMANENT OUTLET STRUCTURE, DAM, ETC.) WITH THE EXCEPTION OF THE INTERIOR FINE GRADING FOR THE FACILITY. THE INTERIOR FINE GRADING WILL BE CONSTRUCTED ONCE THE EROSION CONTROL PHASE IS COMPLETE.
   B. THE TEMPORARY DRAW DOWN RISER (OR SKIMMER) SHALL BE CONNECTED TO THE PERMANENT 6"Ø DIP DRAIN PIPE.
   C. ONCE THE UPSTREAM DRAINAGE AREA IS STABILIZED AND THE EROSION CONTROL INSPECTOR APPROVES THE REMOVAL OF THE SEDIMENT BASIN, THE CONTRACTOR SHALL REMOVE THE TEMPORARY DRAW DOWN RISER (OR SKIMMER) AND CLEAN OUT THE BASIN. ALL SEDIMENT, TRASH, ETC. SHALL BE DISPOSED OF PROPERLY (I.E. - PLACED IN A LANDFILL) AND NOT STOCKPILED IN AN AREA WHERE WATER QUALITY COULD BE ADVERSELY AFFECTED.
   D. ONCE THE BASIN IS CLEANED OUT, AND ALL EROSION CONTROL DEVICES REMOVED, THE CONTRACTOR SHALL CONSTRUCT THE INTERIOR GRADING SHOWN ON THIS SHEET.
   E. ONCE THE GRADING IS COMPLETE, THE CONTRACTOR SHALL REQUEST AN ON-SITE INSPECTION AND AN AS-BUILT SURVEY PRIOR TO INSTALLATION OF THE STORMWATER CONTROL MEASURE PLANTS. IF THE CONTRACTOR PLANTS THE PROPOSED VEGETATION PRIOR TO AN AS-BUILT SURVEY (AND SUBSEQUENT APPROVAL), ANY CHANGES TO THE GRADING / RE-PLANTING OF PLANTS WILL BE AT THE CONTRACTOR'S EXPENSE.
   F. ONCE THE ENGINEER HAS APPROVED THE AS-BUILT GRADING, THE CONTRACTOR SHALL PLANT THE PROPOSED STORMWATER CONTROL MEASURE PLANTS SHOWN ON THE LANDSCAPE PLAN FOR THE FACILITY. AFTER COMPLETION OF THE PLANTING, THE LANDSCAPE CONTRACTOR SHALL PROVIDE A LETTER TO THE ENGINEER CERTIFYING THAT THE PLANTS HAVE BEEN INSTALLED PER THE APPROVED STORMWATER CONTROL MEASURE PLANTING PLAN.

6. ALL OSHA REQUIREMENTS FOR EXCAVATIONS (SHORING, DEPTH, ETC.) ARE THE RESPONSIBILITY OF THE CONTRACTOR. IF REQUIRED, THE CONTRACTOR SHALL PROVIDE AN EXCAVATION PLAN TO BE SEALED BY A NC P.E. IT IS THE RESPONSIBILITY OF THE CONTRACTOR TO DETERMINE IF AN EXCAVATION PLAN IS REQUIRED. THE JOHN R. MCADAMS COMPANY ASSUMES NO RESPONSIBILITY FOR ANY EXCAVATION DESIGN RELATED TO SAFETY OR OSHA REQUIREMENTS.

7. ON-SITE GEOTECHNICAL ENGINEER TO DETERMINE IF IN-SITU SOILS ENCOUNTERED WOULD MAINTAIN A STORMWATER CONTROL MEASURE PERMANENT POOL AT DESIGN ELEVATION. IF HIGHLY PERMEABLE SOILS ARE ENCOUNTERED THAT WOULD NOT MAINTAIN THE PERMANENT POOL ELEVATION AS DESIGNED, A CLAY LINER MAY BE REQUIRED TO MAINTAIN A PERMANENT POOL OF WATER IN THE STORMWATER CONTROL MEASURE. FINAL DETERMINATION IF A CLAY LINER IS NEEDED SHALL BE THE RESPONSIBILITY OF THE ON-SITE GEOTECHNICAL ENGINEER (REPLACE ON-SITE GEOTECHNICAL ENGINEER WITH DESIGN ENGINEER FOR TOWN OF ROLESVILLE PROJECTS). UPON DETERMINATION OF HIGHLY PERMEABLE SOIL CONDITIONS, ON-SITE GEOTECHNICAL ENGINEER WILL INFORM THE DESIGN ENGINEER AND RECOMMEND LINER SPECIFICATIONS.

8. IT IS ANTICIPATED THAT DEWATERING WILL BE NECESSARY IN THE EXCAVATION AREAS (E.G. - EMBANKMENT SUB GRADE, INTERIOR PORTIONS OF THE STORMWATER CONTROL MEASURE, KEY TRENCH, ETC.). THEREFORE, THE CONTRACTOR SHALL FURNISH, INSTALL, OPERATE, AND MAINTAIN ANY PUMPING EQUIPMENT, ETC. NEEDED FOR REMOVAL OF WATER FROM VARIOUS PARTS OF THE STORMWATER CONTROL MEASURE SITE. DURING PLACEMENT OF FILL WITHIN THESE AREAS, THE CONTRACTOR SHALL KEEP THE WATER LEVEL BELOW THE BOTTOM OF THE EXCAVATION / CONSTRUCTION AREAS. THE MANNER IN WHICH THE WATER IS REMOVED SHALL BE SUCH THAT THE EXCAVATION BOTTOM AND SIDE SLOPES ARE STABLE, WITH NO SEDIMENT DISCHARGED FROM THE SITE (I.E. PUMPED WATER MAY NEED TO BE DIRECTED TO AN APPROVED EROSION CONTROL DEVICE SUCH AS A DIRT BAG (ACF ENVIRONMENTAL), OR ENGINEER APPROVED EQUIVALENT, PRIOR TO DISCHARGE).

9. THE GRADES SHOWN ON THIS PLAN ARE FINISHED GRADES. IF THE EXISTING SOIL LAYER AFTER CONSTRUCTION / COMPACTION IS NOT DETERMINED SUITABLE BY A LANDSCAPE PROFESSIONAL FOR THE WET POND PLANTINGS, THEN THE CONTRACTOR SHALL AMEND THE PLANTING AREA OF THE WET POND AS DIRECTED BY A LANDSCAPE PROFESSIONAL.

10. PRIOR TO TOPSOIL INSTALLATION, THE CONTRACTOR SHALL SCARIFY THE TOP 2"-3" OF THE BERM SECTION TO PROMOTE BONDING OF THE TOPSOIL WITH THE COMPACTED FILL. THE TOPSOIL DEPTH SHALL RANGE FROM 3"-4" ON THE DAM EMBANKMENT AND AQUATIC SHELF. PLEASE NOTE THE TOPSOIL SHALL BE AMENDED, AS DIRECTED BY A LANDSCAPE PROFESSIONAL, PRIOR TO INSTALLATION ON THE EMBANKMENT AND AQUATIC SHELF.

11. THE CONTRACTOR SHALL REFER TO THE LANDSCAPE PLAN FOR THE PERMANENT PLANTING PLAN/SCHEDULE FOR THIS FACILITY. CONTRACTOR SHALL COORDINATE WITH A LANDSCAPE PROFESSIONAL REGARDING SCHEDULING FOR PLANT INSTALLATION. PLEASE NOTE THAT NO TREES/SHRUBS OF ANY TYPE MAY BE PLANTED ON THE PROPOSED DAM EMBANKMENT (FILL AREAS).

OUTLET STRUCTURE MATERIAL SPECIFICATIONS

1. THE 24"Ø RCP OUTLET BARREL SHALL BE CLASS III RCP, MODIFIED BELL AND SPIGOT, MEETING THE REQUIREMENTS OF ASTM C76-LATEST. THE PIPES SHALL HAVE CONFINED O-RING RUBBER GASKET JOINTS MEETING ASTM C-443-LATEST. THE PIPE JOINTS SHALL BE TYPE R-4.

2. THE STRUCTURAL DESIGN FOR THE 4' X 4' (INTERNAL DIMENSIONS) RISER BOX WITH EXTENDED BASE SHALL BE BY OTHERS. PRIOR TO ORDERING THE STRUCTURES, THE CONTRACTOR SHALL PROVIDE, TO THE DESIGN ENGINEER FOR REVIEW, SHOP DRAWINGS AND SUPPORTING STRUCTURAL CALCULATIONS SEALED BY A P.E. REGISTERED IN NORTH CAROLINA DEMONSTRATING THE PERTINENT VERTICAL LOADS ARE SUPPORTED BY THE CONCRETE RISER STRUCTURE.

3. THE RISER BOX OUTLET STRUCTURE SHALL BE PROVIDED WITH STEPS 16" ON CENTER. STEPS SHALL BE PROVIDED ON THE INNER WALL OF THE RISER BOX. STEPS SHALL BE IN ACCORDANCE WITH NCDOT STD. 840.66. PLEASE REFER TO SHEET C9.02K FOR LOCATION OF THE RISER STEPS. NOTE THE STEPS SHALL LINE UP WITH THE ACCESS HATCH OF THE TRASH RACK.

4. THE CONCRETE ANTI-FLOTATION BLOCK SHALL BE CAST-IN-PLACE. STEEL REINFORCEMENT AND CONNECTION TO THE RISER SHALL BE PROVIDED IN ACCORDANCE WITH THE DETAIL ON SHEET C9.02K. THE CONTRACTOR SHALL ENSURE THE WEIGHT OF THE ENTIRE RISER STRUCTURE IS GREATER THAN OR EQUAL TO XX,XXX LBS. IN LIEU OF CAST-IN-PLACE, THE CONTRACTOR MAY OPT FOR A PRECAST ANTI-FLOTATION BLOCK. SHOP DRAWINGS FOR THE PRECAST BLOCK SHALL BE SUBMITTED TO THE ENGINEER FOR REVIEW. THE PRECAST ANTI-FLOTATION BLOCK SHALL HAVE A SHIPPING WEIGHT OF XX,XXX LBS.

5. THE RISER BOX JOINTS SHALL BE SEALED USING BUTYL RUBBER SEALANT CONFORMING TO ASTM-C990-LATEST. IF NECESSARY, THE CONTRACTOR SHALL INCORPORATE A WATERSTOP INTO THE RISER BOX JOINT TO ENSURE A WATERTIGHT CONNECTION. THE CONTRACTOR SHALL PARGE JOINTS ON BOTH THE INSIDE AND OUTSIDE WITH NON-SHRINK GROUT AND INSTALL GALVANIZED STEEL STRAPS PER DETAIL ON SHEET C9.01K.

6. PRIOR TO ORDERING, THE CONTRACTOR SHALL SUBMIT TRASH RACK SHOP DRAWINGS TO THE ENGINEER FOR REVIEW. CONTRACTOR SHALL ENSURE THAT AN ACCESS HATCH IS PROVIDED WITHIN THE TRASH RACK (SEE DETAIL FOR LOCATION) THAT WILL ALLOW FOR FUTURE MAINTENANCE ACCESS. CONTRACTOR SHALL ALSO PROVIDE A CHAIN AND LOCK FOR SECURING THE ACCESS HATCH. NOTE THE ACCESS HATCH SHALL LINE UP WITH THE ACCESS STEPS AFTER INSTALLATION.

7. ALL POURED CONCRETE SHALL MEET THE FOLLOWING SPECIFICATIONS UNLESS OTHERWISE NOTED:

   -MINIMUM 3000 PSI (28 DAY)
   -SLUMP = 3" - 5"
   -ENTRAINED AIR = 5% - 7%

   PLEASE NOTE NO CONCRETE SHALL BE POURED WHEN THE AMBIENT AIR TEMPERATURES ARE EXPECTED TO BE ABOVE 85°F OR BELOW 40°F. CAST-IN-PLACE CONCRETE SHALL BE "WET CURED" AFTER FINISHING FOR A MINIMUM OF 48 HOURS.

   ON-SITE GEOTECHNICAL ENGINEER TO ENSURE AND CERTIFY ALL POURED CONCRETE MEETS THE ABOVE SPECIFICATIONS.

8. GEOTEXTILE FABRIC FOR THE 24"Ø RCP OUTLET BARREL JOINTS SHALL BE MIRAFI 180N OR ENGINEER APPROVED EQUAL (NON-WOVEN FABRIC).

9. STORMWATER CONTROL MEASURE EMERGENCY DRAW DOWN IS VIA AN 6"Ø PLUG VALVE. THE VALVE SHALL BE A M&H STYLE 1820 ECCENTRIC VALVE OR APPROVED EQUAL. THIS VALVE IS IN ACCORDANCE WITH AWWA C-517, AND SHALL BE OPERABLE FROM TOP OF OUTLET STRUCTURE VIA A HAND WHEEL (SEE DETAIL SHEET C9.01K). THE CONTRACTOR SHALL PROVIDE A REMOVABLE VALVE WRENCH WITH A HAND WHEEL ON TOP FOR OPERATION OF THE 6"Ø PLUG VALVE.

CONSTRUCTION SEQUENCE

1. PRIOR TO CONSTRUCTION, THE OWNER SHALL OBTAIN A LAND DISTURBING (GRADING) PERMIT AND AN "APPROVAL TO CONSTRUCT" FROM THE TOWN OF ROLESVILLE AND ALL OTHER NECESSARY PERMITS FROM APPLICABLE AGENCIES (E.G. 404 / 401 PERMITS)

2. INSTALL ALL SEDIMENT AND EROSION CONTROL MEASURES PER THE APPROVED SEDIMENT AND EROSION CONTROL PLAN. THE CONTRACTOR SHALL MAINTAIN ALL APPROVED SEDIMENT AND EROSION CONTROL MEASURES THROUGHOUT THE ENTIRE PROJECT, AS REQUIRED. THE CONTRACTOR SHALL RECEIVE APPROVAL FROM THE EROSION CONTROL INSPECTOR, AS REQUIRED BY GOVERNING AGENCIES, PRIOR TO ANY CLEARING.

3. CLEAR AND GRUB AREA WITHIN THE LIMITS OF THE PROPOSED DAM CONSTRUCTION. ALL TREES AND THEIR ENTIRE ROOT SYSTEMS MUST BE REMOVED FROM THE DAM FOOTPRINT AREA AND BACKFILLED WITH SUITABLE SOIL MATERIAL. THE BACKFILLED AREAS SHALL BE COMPACTED TO THE SAME STANDARDS AS THE DAM EMBANKMENT. THE REMAINING AREA OF THE EMBANKMENT SHALL BE STRIPPED TO A SUITABLE DEPTH AS DIRECTED BY THE ON-SITE GEOTECHNICAL ENGINEER. ANY RESIDUAL SOILS TO BE LEFT IN PLACE MUST BE WELL SCARIFIED TO PROMOTE BONDING OF THE NEW EMBANKMENT FILL. NO EMBANKMENT MATERIAL SHALL BE PLACED FOR THE DAM OR KEY TRENCH UNTIL APPROVAL OF THE DAM SUBGRADE IS OBTAINED FROM THE ON-SITE GEOTECHNICAL ENGINEER.

4. EXCAVATE FOR THE NEW KEY TRENCH ALONG THE CENTERLINE OF THE PROPOSED DAM EMBANKMENT. THE TRENCH SHALL EXTEND A MINIMUM OF 5 FT BELOW EXISTING GRADE OR 2 FT BELOW THE 24"Ø RCP OUTLET BARREL AND SHALL HAVE A MINIMUM BOTTOM WIDTH OF 4 FEET. THE KEY TRENCH SIDESLOPES SHALL BE A MINIMUM OF 1:1 (H:V). WHEN EXCAVATING THE KEY TRENCH, IF ANY DEBRIS IS ENCOUNTERED TO AN EXTENT THAT SUCH DEBRIS MAY EXIST IN OTHER INSITU PORTIONS OF THE DAM EMBANKMENT, IT SHOULD ALSO BE REMOVED. THE KEY TRENCH SHALL BE COMPACTED TO THE SAME SPECIFICATION LISTED IN ITEM 4 OF THE SECTION TITLED "BERM AND SOIL COMPACTION SPECIFICATIONS." DEPENDING UPON ON-SITE SOIL CONDITIONS ENCOUNTERED DURING EXCAVATION, THE ON-SITE GEOTECHNICAL ENGINEER MAY VARY THE DEPTH AND DIMENSIONS OF THE KEY TRENCH AS DEEMED NECESSARY. THE ON-SITE GEOTECHNICAL ENGINEER SHALL RETAIN DOCUMENTATION OF ANY VARIATION FOR FUTURE AS-BUILT SUBMITTALS TO THE TOWN OF ROLESVILLE.

5. BEGIN PLACEMENT OF BACKFILL WITHIN THE KEY TRENCH. THE KEY TRENCH SHALL BE COMPACTED TO THE SPECIFICATIONS LISTED ITEM 4 OF THE SECTION TITLED "BERM AND SOIL COMPACTION SPECIFICATIONS." THE KEY TRENCH SHALL BE TESTED PER THE SPECIFICATIONS LISTED IN THAT SECTION.

6. PRIOR TO INSTALLATION, SUBGRADE CONDITIONS ALONG THE SPILLWAY PIPES SHOULD BE EVALUATED BY THE ON-SITE GEOTECHNICAL ENGINEER TO ASSESS WHETHER SUITABLE BEARING CONDITIONS EXIST AT THE SUBGRADE LEVEL. SHOULD SOFT OR OTHERWISE UNSUITABLE CONDITIONS BE ENCOUNTERED ALONG THE PIPE ALIGNMENTS, THESE MATERIALS SHOULD BE UNDERCUT AS DIRECTED BY THE GEOTECHNICAL ENGINEER. THE UNDERCUT MATERIALS SHALL BE REPLACED WITH ADEQUATELY COMPACTED STRUCTURAL FILL, LEAN CONCRETE OR FLOWABLE FILL AS DIRECTED BY THE ON-SITE GEOTECHNICAL ENGINEER.

7. IN ORDER TO HELP PROTECT THE SOIL SUBGRADE FROM DETERIORATION (DUE TO EXPOSURE, RAINFALL, SEEPAGE, AND RUNOFF) BEFORE THE CRADLE CAN BE POURED, IT IS STRONGLY RECOMMENDED THAT A 3" TO 4" THICK CONCRETE MUD MAT BE POURED OVER THE SUBGRADE ONCE IT IS APPROVED BY THE ON-SITE GEOTECHNICAL ENGINEER. THE MUD MAT WILL ALSO PROVIDE BEARING FOR THE BLOCKS THAT TEMPORARILY SUPPORT THE SPILLWAY PIPE UNTIL THE CRADLE CAN BE POURED. THE METHOD OF BLOCK SUPPORT FOR THE PIPE PROPOSED BY THE CONTRACTOR SHOULD BE SUBMITTED TO THE JOHN R. MCADAMS COMPANY FOR REVIEW.

8. BEGIN CONSTRUCTION OF THE NEW EMBANKMENT. FILL MATERIALS SHALL BE PLACED IN MAXIMUM 8" THICK LIFTS PRIOR TO COMPACTION, UNLESS DIRECTED OTHERWISE BY THE ON-SITE GEOTECHNICAL ENGINEER. FILL LIFTS SHALL BE CONTINUOUS OVER THE ENTIRE LENGTH OF FILL. IF IT IS NECESSARY, THE EMBANKMENT FILL MATERIAL WILL BE OVERBUILT IN HORIZONTAL LIFTS AND CUT BACK TO FINAL GRADE IN ORDER TO ACHIEVE PROPER COMPACTION.

9. AS CONSTRUCTION OF THE EMBANKMENT MOVES FORWARD, IT WILL BE NECESSARY TO INSTALL THE CONCRETE CRADLE. SEE NOTE ON CRADLE DETAIL (SHEET C9.02K). THIS MAY BE CONSTRUCTED USING ONE OF THE FOLLOWING METHODS:

   A. IF THE PROPOSED STRUCTURAL FILL MATERIAL IS UTILIZED AS THE FORMWORK FOR THE CONCRETE CRADLE, THEN THE STRUCTURAL FILL SHOULD BE INSTALLED AND COMPACTED UP TO THE TOP OF CONCRETE CRADLE ELEVATION. ONCE THE STRUCTURAL FILL REACHES THE NEXT DOWNSTREAM JUNCTION BOX OR HEADWALL AND IS COMPACTED TO THE ELEVATION OF THE TOP OF THE CONCRETE CRADLE, EXCAVATE THE CONCRETE CRADLE TRENCH PER THE PROVIDED DETAILS AND CONSTRUCT THE CONCRETE CRADLE AS PER THE PROVIDED CONCRETE CRADLE DETAIL.

   B. IF THE PROPOSED STRUCTURAL FILL IS NOT UTILIZED AS THE FORMWORK FOR THE CONCRETE CRADLE, THEN PRIOR TO CONSTRUCTING THE STRUCTURAL FILL EMBANKMENT, THE FORMWORK FOR THE CONCRETE CRADLE SHOULD BE INSTALLED ON EXISTING GROUND AND/OR THE MUD MAT. THE CONCRETE CRADLE SHALL BE CONSTRUCTED PER THE PROVIDED DETAILS

10. AS AN ALTERNATE TO A CONCRETE CRADLE UNDER THE BARREL PIPE (SEE SHEET C9.02K), THE CONTRACTOR MAY CHOOSE TO ELIMINATE THE CONCRETE CRADLE AND USE COMPACTED BACKFILL IF THE ON-SITE GEOTECHNICAL ENGINEER WILL PROVIDE A NC PE SEALED LETTER CERTIFYING THAT THE COMPACTION UNDER, AROUND, AND ABOVE THE BARREL MEETS THE SPECIFICATIONS OF THE EMBANKMENT COMPACTION REQUIREMENTS AND MOISTURE CONTENT. THIS CERTIFICATION LETTER MUST BE SUBMITTED TO THE DESIGN ENGINEER PRIOR TO BACKFILL. THIS SEPARATE CERTIFICATION MUST BE SPECIFIC TO THE BARREL PIPE FOR THE FACILITY, AND MUST CLEARLY STATE THAT ALL SOIL MATERIAL UNDER, AROUND, AND ABOVE THE BARREL PIPE MEETS THE BERM AND SOIL COMPACTION SPECIFICATIONS ON THIS SHEET. THIS CERTIFICATION IS TO INCLUDE REFERENCE TO BOTH MATERIAL AND COMPACTION, AND MUST STATE THAT ALL MATERIALS UNDER, AROUND, AND ABOVE THE BARREL HAVE BEEN COMPACTED PER THE BERM MATERIAL SPECIFICATIONS (AT LEAST 95% OF MAXIMUM DRY DENSITY USING ASTM D698 STANDARD PROCTOR) WITH NO VOID SPACES PRESENT. THE CONTRACTORS INTENT TO UTILIZE THIS ALTERNATIVE MUST BE STATED PRIOR TO CONSTRUCTION TAKING PLACE. THIS CONTRACTORS CERTIFICATION MUST BE PRESENTED TO THE DESIGN ENGINEER BEFORE AN AS-BUILT CERTIFICATION CAN BE ISSUED FOR THIS FACILITY.

11. INSTALL RISER / BARREL ASSEMBLY, ALONG WITH THE EMERGENCY DRAIN SYSTEM. INSTALL 24" RCP OUTLET BARREL SPILLWAY FILTER FROM THE DETAILS SHOWN ON SHEET C9.02K.

12. CONSTRUCT EMBANKMENT PER SPECIFICATIONS LISTED IN THE SECTION TITLED "BERM AND SOIL COMPACTION SPECIFICATIONS" AND REQUIREMENTS OF THE ON-SITE GEOTECHNICAL ENGINEER. ALL CHARACTERISTICS OF THE EMBANKMENT FILL MATERIAL SHALL MEET THE STANDARDS SET FORTH IN "BERM AND SOIL COMPACTION SPECIFICATIONS", INCLUDING COMPACTION AND MOISTURE REQUIREMENTS. IF NECESSARY TO ACHIEVE PROPER COMPACTION, THE EMBANKMENT FILL MATERIAL WILL BE OVERBUILT IN HORIZONTAL LIFTS AND CUT BACK TO PROPER FINAL GRADE. ANY HAND COMPACTION ACTIVITIES AROUND SPILLWAY OR DRAIN STRUCTURES SHALL BE CONDUCTED IN 4-INCH LOOSE LIFTS AND BE TO THE SAME COMPACTION AND MOISTURE REQUIREMENTS AS THE ENTIRE EMBANKMENT. ALL COMPACTION AND MOISTURE TESTING SHALL BE CARRIED OUT AS DIRECTED BY THE ON-SITE GEOTECHNICAL ENGINEER AND AS LISTED IN THE SECTION TITLED "BERM AND SOIL COMPACTION SPECIFICATIONS".

13. UPON COMPLETION OF DAM EMBANKMENT, PROMPTLY STABILIZE AND SEED DAM EMBANKMENT PER SEEDING SCHEDULE. PERMANENT GROUND COVER SHALL BE ESTABLISHED PER THE PERMANENT SEEDING SCHEDULE FOUND ON SHEET C9.03K.

14. SCHEDULE A FINAL AS-BUILT INSPECTION AND AS-BUILT SURVEY WITH THE ENGINEER AND SURVEYOR. AN AS-BUILT INSPECTION AND SURVEY SHALL BE SCHEDULED BEFORE IMPOUNDING WATER IN THE FACILITY AND A MINIMUM OF 60 DAYS PRIOR TO THE ANTICIPATED DATE OF CERTIFICATION APPROVAL. ANY COMMENTS OR DEFICIENCIES IN THE SCM CONSTRUCTION MUST BE CORRECTED TO THE SATISFACTION OF THE ENGINEER AND OWNER BEFORE CERTIFICATION SHALL BE GRANTED.

BERM AND SOIL COMPACTION SPECIFICATIONS

1. PRIOR TO CONSTRUCTION, THE ON-SITE GEOTECHNICAL ENGINEER SHALL IDENTIFY BORROW / FILL AREAS AND VERIFY THEIR SUITABILITY FOR USE WITHIN THE DAM EMBANKMENT. ALSO, THE ON-SITE GEOTECHNICAL ENGINEER SHALL PERFORM STANDARD PROCTORS ON THE PROPOSED BORROW MATERIAL TO ENSURE THAT OPTIMUM MOISTURE CONTENT AND COMPACTION CAN BE ACHIEVED / CONTROLLED DURING CONSTRUCTION.

2. ALL FILL MATERIALS TO BE USED FOR THE DAM EMBANKMENT SHALL BE TAKEN FROM BORROW AREAS APPROVED BY THE ON-SITE GEOTECHNICAL ENGINEER. THE FILL MATERIAL SHALL BE FREE FROM ROOTS, STUMPS, WOOD, STONES GREATER THAN 6", AND FROZEN OR OTHER OBJECTIONABLE MATERIAL. THE FOLLOWING SOIL TYPES ARE SUITABLE FOR USE AS FILL WITHIN THE DAM EMBANKMENT AND KEY TRENCH: ML AND CL. ALL FILL MATERIALS SHALL BE APPROVED BY THE ONSITE GEOTECHNICAL ENGINEER FOR THE INTENDED USE.

3. FILL PLACEMENT FOR THE EMBANKMENT SHALL NOT EXCEED A MAXIMUM 8" LIFT (UNCOMPACTED). EACH LIFT SHALL BE CONTINUOUS FOR THE ENTIRE LENGTH OF EMBANKMENT. BEFORE PLACEMENT OF FILL FOR THE BERM SECTION, ALL UNSUITABLE MATERIAL SHALL BE REMOVED AND THE SURFACE PROPERLY PREPARED FOR FILL PLACEMENT. FILL MATERIAL ADJACENT TO ALL SPILLWAY AND DRAINAGE STRUCTURES SHALL BE PLACED IN 4-INCH (UNCOMPACTED) LIFTS AND HAND-COMPACTED TO THE SAME COMPACTION AND MOISTURE REQUIREMENTS AS THE ENTIRE EMBANKMENT.

4. ALL FILL SOILS USED IN THE EMBANKMENT CONSTRUCTION SHALL BE COMPACTED TO AT LEAST 95% OF THE STANDARD PROCTOR MAXIMUM DRY DENSITY (ASTM D-698). THE FILL SOILS SHALL BE COMPACTED AT A MOISTURE CONTENT WITHIN -3 TO +3 PERCENT OF ITS OPTIMUM MOISTURE CONTENT. COMPACTION TESTS SHALL BE PERFORMED BY THE ON-SITE GEOTECHNICAL ENGINEER DURING CONSTRUCTION TO VERIFY THAT THE PROPER COMPACTION LEVEL HAS BEEN REACHED. THE FILL SHOULD BE COMPACTED USING A SHEEPSFOOT TYPE COMPACTOR. IN ORDER TO PREVENT DAMAGE TO THE PIPE, NO COMPACTION EQUIPMENT SHALL CROSS ANY PIPE UNTIL MINIMUM COVER IS ESTABLISHED ALONG THE PIPE.

5. THE DESIGN ENGINEER SHALL BE PROVIDED WITH REPORTS AND CERTIFICATION, BY THE ON-SITE GEOTECHNICAL ENGINEER, THAT THE GEOTECHNICAL ASPECTS OF THE FACILITY HAVE BEEN CONSTRUCTED PER PLAN. THIS CERTIFICATION MUST ADDRESS THE TESTING FOR MATERIALS AND COMPACTION OF THE DAM EMBANKMENT AND SPILLWAY. THESE REPORTS AND CERTIFICATION WILL BE NEEDED DURING THE AS-BUILT CERTIFICATION PROCESS FOR THIS STORMWATER CONTROL MEASURE. THEREFORE, IT SHALL BE THE CONTRACTOR'S RESPONSIBILITY TO COORDINATE TESTING AND OBSERVATION WITH THE ON-SITE GEOTECHNICAL ENGINEER.

6. TESTING OF THE NEW FILL MATERIALS SHALL BE PERFORMED TO VERIFY THAT THE RECOMMENDED LEVEL OF COMPACTION IS ACHIEVED DURING CONSTRUCTION. THEREFORE, ONE DENSITY TEST SHALL BE PERFORMED FOR EVERY 2,500 SQUARE FEET OF AREA FOR EVERY LIFT OF FILL OR AS RECOMMENDED BY THE ON-SITE GEOTECHNICAL ENGINEER.

7. TESTING WILL BE REQUIRED ALONG THE 24"Ø RCP OUTLET BARREL AT A FREQUENCY OF ONE TEST PER 25 LF OF PIPE PER VERTICAL FOOT OF FILL OR AS DIRECTED BY THE ON-SITE GEOTECHNICAL ENGINEER.

STATEMENT OF RESPONSIBILITY

1. ALL REQUIRED MAINTENANCE AND INSPECTIONS OF THE STORMWATER CONTROL MEASURE SHALL BE THE RESPONSIBILITY OF THE OWNER, PER THE EXECUTED OPERATION AND MAINTENANCE AGREEMENT FOR THIS FACILITY.

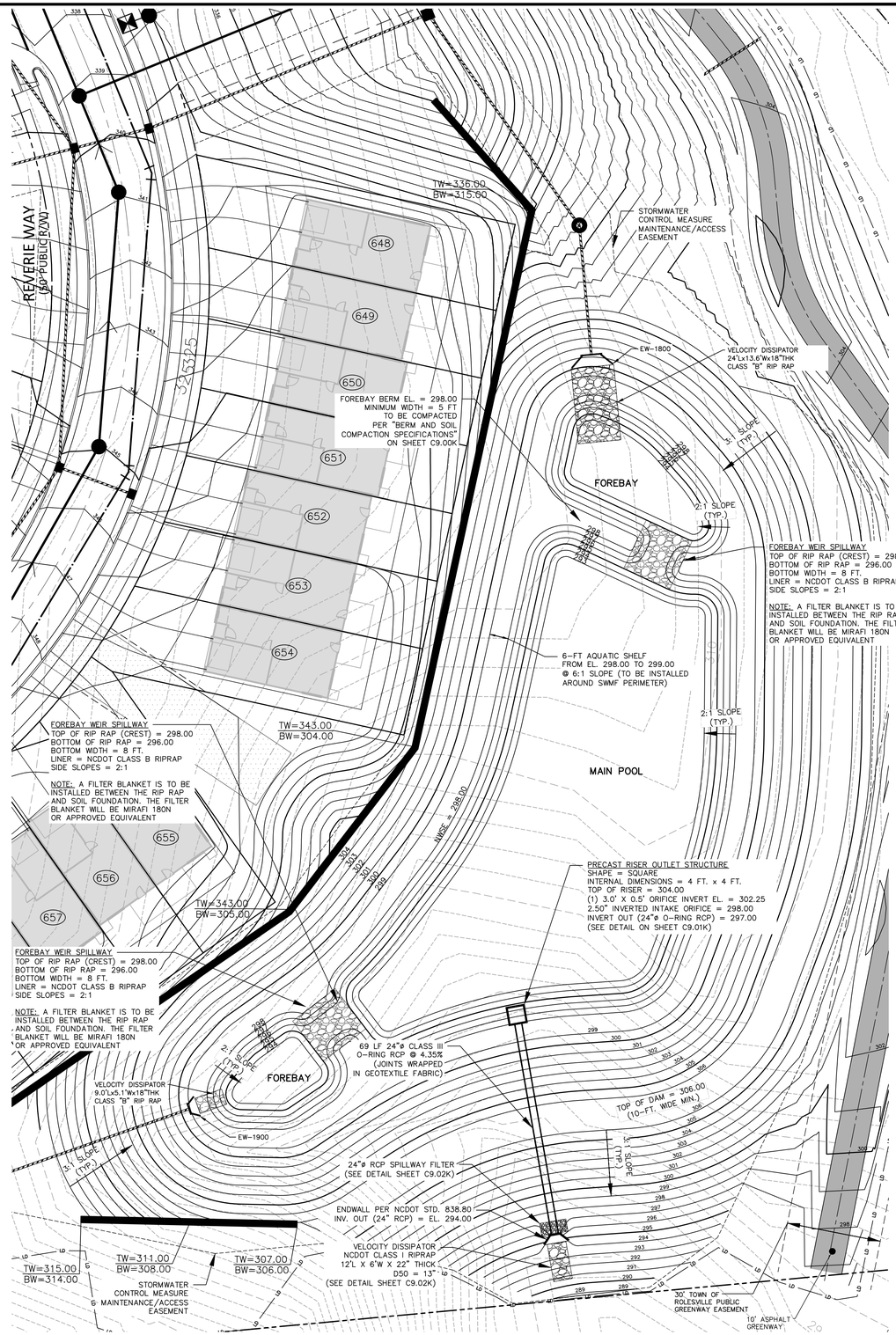

STORMWATER CONTROL MEASURE 'K' PLAN VIEW
1" = 20'

GRAPHIC SCALE
0 10 20 40
1 inch = 20 ft.

FINAL DRAWING - NOT RELEASED FOR CONSTRUCTION

McADAMS
The John R. McAdams Company, Inc.
2905 Meridian Parkway
Durham, NC 27713

phone 919. 361. 5000
fax 919. 361. 2269
license number: C-0293, C-187

www.mcadamsco.com

CLIENT

ASHTON RALEIGH RESIDENTIAL, LLC.
900 RIDGEFIELD DRIVE, SUITE 335
RALEIGH, NORTH CAROLINA 27609
PHONE: 919. 422. 7663
CONTACT: BOB MISHLER

ASHTON WOODS

THE POINT
PHASES 8 AND 14
CONSTRUCTION DRAWINGS - PACKAGE 3
EAST YOUNG STREET
TOWN OF ROLESVILLE, WAKE FOREST TOWNSHIP, WAKE COUNTY, NORTH CAROLINA

CD XX-XX

NORTH CAROLINA PROFESSIONAL ENGINEER SEAL 043300 DANIEL C. WICBE
NOT FOR CONSTRUCTION UNLESS SIGNED

REVISIONS

NO. DATE

PLAN INFORMATION

PROJECT NO.	AWH-20000
FILENAME	AWH20000 - SCM K
CHECKED BY	DCW
DRAWN BY	TKD
SCALE	1"=20'
DATE	12. 13. 2023

SHEET

STORMWATER CONTROL MEASURE 'K' DETAILS

C9.00K

M:\Projects\AWH\AWH-20000\04-Production\Water Resource\South Site\Current Drawings\SCM CD\AWH20000 - SCM K.dwg, 12/13/2023 12:06:33 PM, Tommy Dabolt

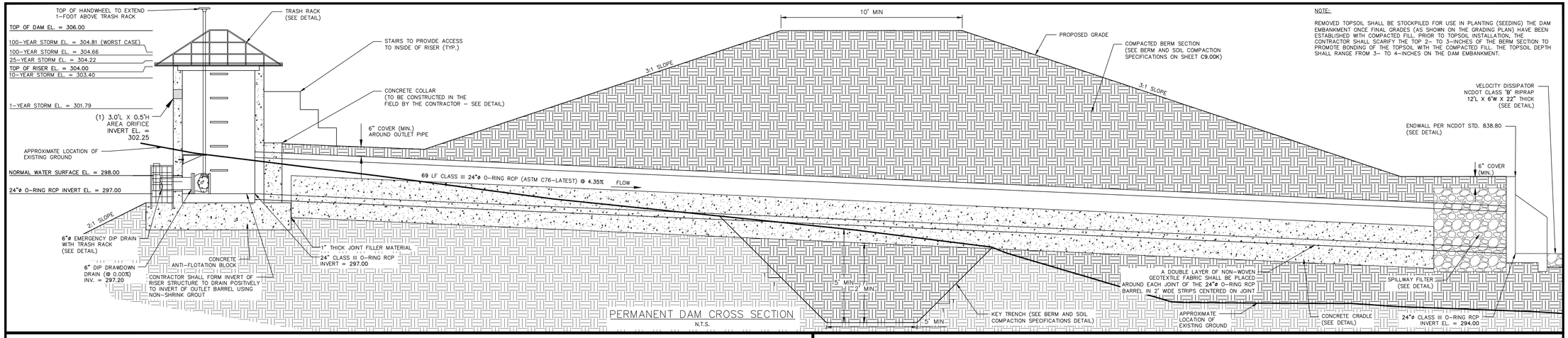

PERMANENT DAM CROSS SECTION
N.T.S.

NOTE:

REMOVED TOPSOIL SHALL BE STOCKPILED FOR USE IN PLANTING (SEEDING) THE DAM EMBANKMENT ONCE FINAL GRADES (AS SHOWN ON THE GRADING PLAN) HAVE BEEN ESTABLISHED WITH COMPACTED FILL PRIOR TO TOPSOIL INSTALLATION. THE CONTRACTOR SHALL SCARIFY THE TOP 2- TO 3-INCHES OF THE BERM SECTION TO PROMOTE BONDING OF THE TOPSOIL WITH THE COMPACTED FILL. THE TOPSOIL DEPTH SHALL RANGE FROM 3- TO 4-INCHES ON THE DAM EMBANKMENT.

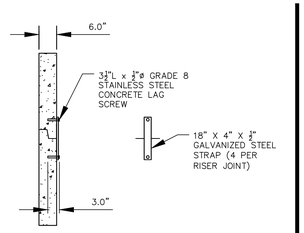

RISER JOINT CONNECTION DETAIL
N.T.S.

NOTES:

1. CONCRETE ANTI-FLOTATION BLOCK TO BE PROVIDED WITH MINIMUM TEMPERATURE AND SHRINKAGE STEEL REINFORCEMENT.

2. TRASH RACKS NOT SHOWN FOR CLARITY.

3. THE NUMBER OF GUIDES FOR THE VALVE STEM SHALL BE DETERMINED IN THE FIELD BY THE CONTRACTOR. THE VALVE STEM MUST BE OPERABLE FROM THE TOP OF THE RISER VIA THE HANDWHEEL WITH AN INSIGNIFICANT AMOUNT OF PLAY IN THE VALVE STEM.

4. CONTRACTOR SHALL PROVIDE A JOINT IN THE OUTLET BARREL NO MORE THAN 5-FT FROM THE RISER.

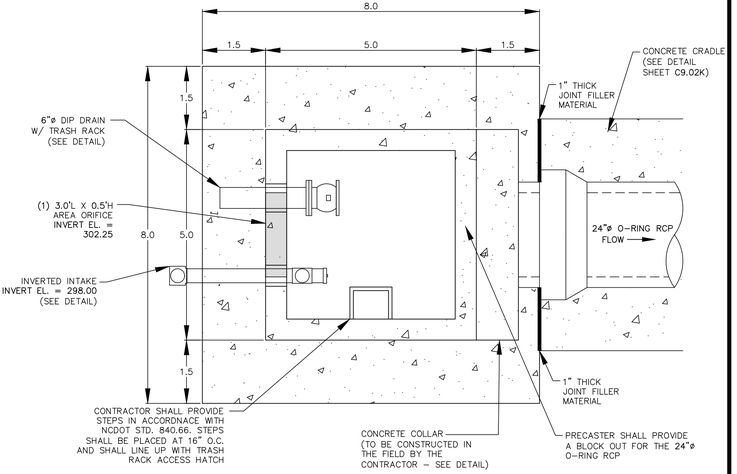

NOTES:
1. ALL REBAR TO BE #4 REBAR.
2. ALL REBAR AND ANGLES TO BE HOT-DIPPED GALVANIZED AND BE PROVIDED WITH AN EPOXY COATING.
3. THE HOT-DIPPED, GALVANIZED 2"x2"x1/4" ANGLES SHALL BE WELDED TO THE REBAR TRASH RACK, ONCE WELDED, THE ENTIRE ASSEMBLY SHALL BE PLACED ONTO THE RISER WITH ANGLES SITTING DIRECTLY ON TOP OF RISER.
4. TRASH RACK IS TO BE SECURELY FASTENED TO THE SPILLWAY RISER WITH A MINIMUM OF FOUR CORROSION-RESISTANT ANCHORS.
5. ACCESS HATCH SHALL ALIGN WITH STEPS IN RISER.

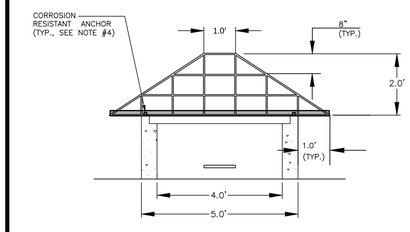

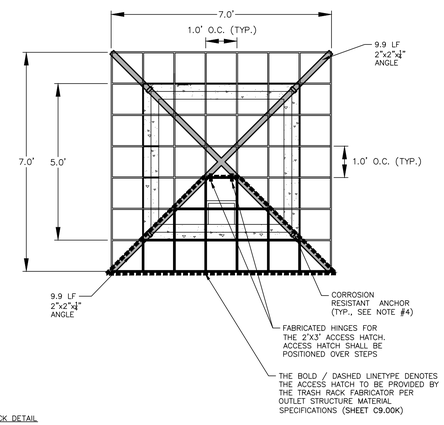

4'X4' RISER TRASH RACK DETAIL
N.T.S.

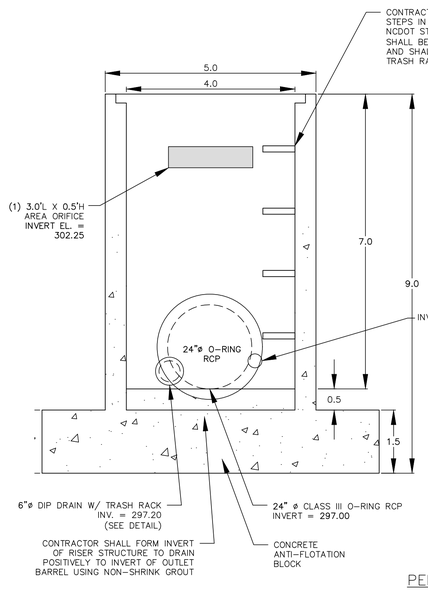

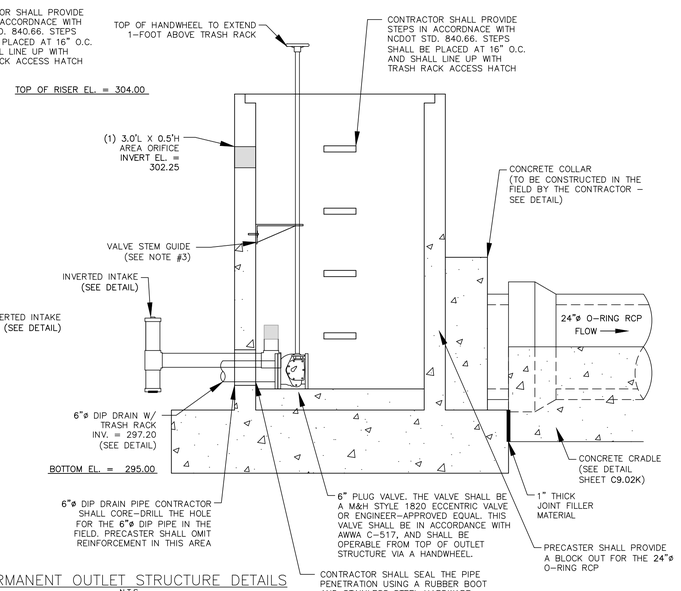

PERMANENT OUTLET STRUCTURE DETAILS
N.T.S.

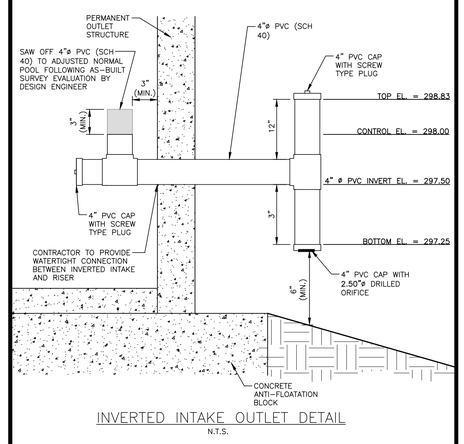

INVERTED INTAKE OUTLET DETAIL
N.T.S.

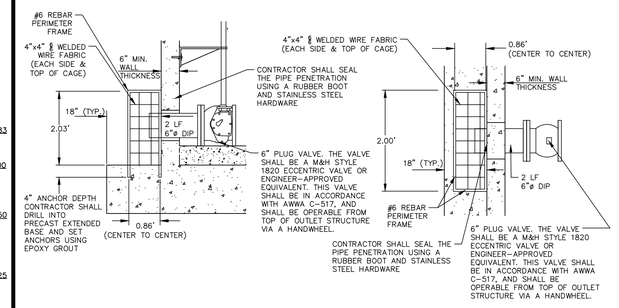

6"ø EMERGENCY DIP DRAIN TRASH RACK DETAILS
N.T.S.

FINAL DRAWING - NOT RELEASED FOR CONSTRUCTION

M:\Projects\AWH\AWH-20000\04-Production\Water Resources\South Site\Current Drawings\SCM\ CDs\AWH20000 - SCM K.dwg, 12/13/2023 12:08:11 PM, Tommy Dabolt

McADAMS
The John R. McAdams Company, Inc.
2905 Meridian Parkway
Durham, NC 27713

phone 919. 361. 5000
fax 919. 361. 2269
license number: C-0293, C-187

www.mcadamsco.com

CLIENT

ASHTON RALEIGH RESIDENTIAL, LLC.
900 RIDGEFIELD DRIVE, SUITE 335
RALEIGH, NORTH CAROLINA 27609
PHONE: 919. 422. 7663
CONTACT: BOB MISHLER

ASHTON WOODS

THE POINT
PHASES 8 AND 14
CONSTRUCTION DRAWINGS - PACKAGE 3
EAST YOUNG STREET
TOWN OF ROLESVILLE, WAKE FOREST TOWNSHIP, WAKE COUNTY, NORTH CAROLINA

CD XX-XX

NORTH CAROLINA PROFESSIONAL ENGINEER SEAL 043300 DANIEL C. WIEBKE — NOT FOR CONSTRUCTION

REVISIONS

NO.	DATE

PLAN INFORMATION

PROJECT NO.	AWH-20000
FILENAME	AWH20000 - SCM K
CHECKED BY	DCW
DRAWN BY	JKD
SCALE	AS SHOWN
DATE	12. 13. 2023

SHEET

STORMWATER CONTROL MEASURE 'K' DETAILS

C9.01K

NOTES:

1. A FILTER BLANKET IS TO BE INSTALLED BETWEEN THE RIPRAP AND SOIL FOUNDATION. THE FILTER BLANKET WILL CONSIST OF A MINIMUM 4" THICK LAYER OF STONE (NCDOT #57) UNDERLAIN WITH MIRAFI FILTER WEAVE 700 OR ENGINEER–APPROVED EQUIVALENT.
2. RIPRAP TO EXTEND TO TOP OF CHANNEL WITH 2:1 SIDE SLOPES THROUGHOUT THE EXTENT OF CHANNEL.

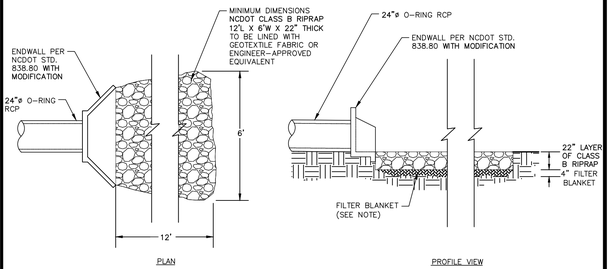

OUTLET BARREL VELOCITY DISSIPATER

N.T.S.

NOTES:

1. ALL REBAR TO BE #4 REBAR.
2. WRAP OUTSIDE OF PIPE WITH VOLCLAY WATERSTOP–RX® 101 (OR PRE–APPROVED EQUIVALENT) AT THE FACE OF THE PRECAST STRUCTURE WALL. PROVIDE 6" OVER LAP ON THE BOTTOM OF THE PIPE.

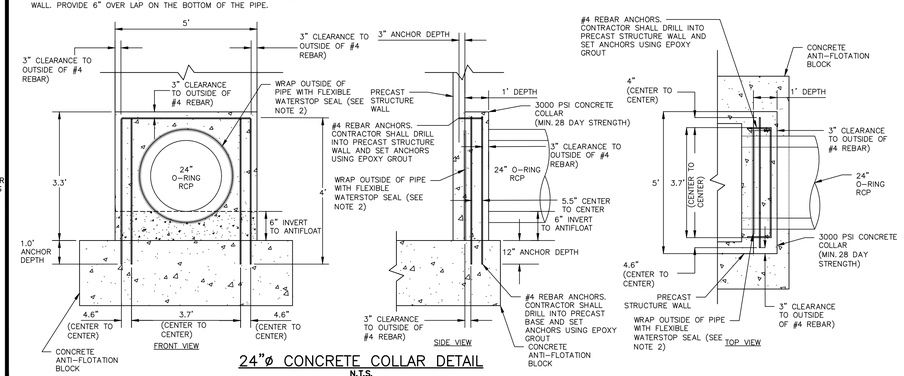

24"ø CONCRETE COLLAR DETAIL

N.T.S.

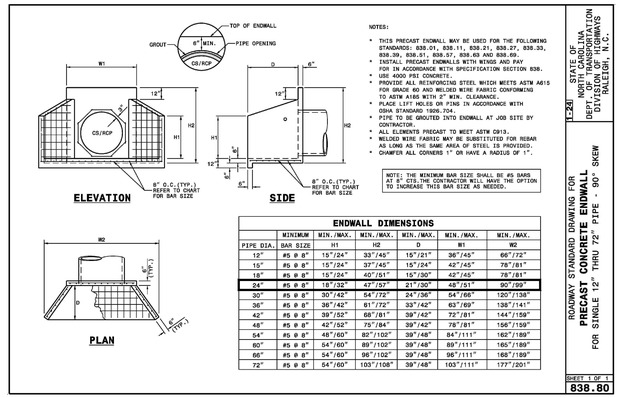

NOTES:

- THIS PRECAST ENDWALL MAY BE USED FOR THE FOLLOWING STANDARDS: 838.01, 838.11, 838.21, 838.27, 838.33, 838.39, 838.51, 838.57, 838.69 AND 838.69.
- INSTALL PRECAST ENDWALLS WITH WINGS AND PAY FOR IN ACCORDANCE WITH SPECIFICATION SECTION 838.
- USE 4000 PSI CONCRETE.
- PROVIDE ALL REINFORCING STEEL WHICH MEETS ASTM A615 FOR GRADE 60 AND WELDED WIRE FABRIC CONFORMING TO ASTM A185 WITH 3" MIN. CLEARANCE.
- PLACE LIFT HOLES OR PINS IN ACCORDANCE WITH OSHA STANDARD 1926.704.
- PIPE TO BE GROUTED INTO ENDWALL AT JOB SITE BY CONTRACTOR.
- ALL ELEMENTS PRECAST TO MEET ASTM C913.
- WELDED WIRE FABRIC MAY BE SUBSTITUTED FOR REBAR AS LONG AS THE SAME AREA OF STEEL IS PROVIDED.
- CHAMFER ALL CORNERS 1" OR HAVE A RADIUS OF 1".

NOTE: THE MINIMUM BAR SIZE SHALL BE #5 BARS AT 8" CTS.THE CONTRACTOR WILL HAVE THE OPTION TO INCREASE THIS BAR SIZE AS NEEDED.

ENDWALL DIMENSIONS

	MINIMUM	MIN./MAX.	MIN./MAX.	MIN./MAX.	MIN./MAX.	MIN./MAX.
PIPE DIA.	BAR SIZE	H1	H2	D	W1	W2
12"	#5 @ 8"	15"/24"	33"/45"	15"/"	36"/45"	66"/72"
15"	#5 @ 8"	15"/24"	37"/45"	15"/24"	42"/45"	78"/81"
18"	#5 @ 8"	15"/24"	40"/51"	15"/30"	42"/45"	78"/81"
24"	#5 @ 8"	18"/32"	47"/57"	21"/30"	48"/51"	90"/99"
30"	#5 @ 8"	30"/42"	54"/72"	24"/36"	54"/66"	120"/138"
36"	#5 @ 8"	36"/42"	61"/72"	33"/42"	63"/69"	138"/141"
42"	#5 @ 8"	39"/52"	68"/81"	39"/42"	72"/81"	144"/159"
48"	#5 @ 8"	42"/52"	75"/84"	39"/42"	78"/81"	156"/159"
54"	#5 @ 8"	48"/60"	82"/102"	39"/48"	84"/111"	162"/189"
60"	#5 @ 8"	54"/60"	89"/102"	39"/48"	89"/111"	165"/189"
66"	#5 @ 8"	54"/60"	96"/102"	39"/48"	96"/111"	168"/189"
72"	#5 @ 8"	54"/60"	103"/108"	39"/48"	103"/111"	177"/201"

STATE OF NORTH CAROLINA DEPARTMENT OF TRANSPORTATION DIVISION OF HIGHWAYS RALEIGH, N.C.

[1-26] ROADWAY STANDARD DRAWING FOR **PRECAST CONCRETE ENDWALL FOR SINGLE 12" THRU 72" PIPE - 90° SKEW**

SHEET 1 OF 1 **838.80**

NOTE:

1. HAVILAND DRAINAGE PRODUCTS 4" ALUMINUM ANIMAL GUARD ITEM NUMBER AGS04 (OR ENGINEER APPROVED EQUIVALENT) TO BE INSTALLED AT OUTLET OF 4" HDPE PIPES

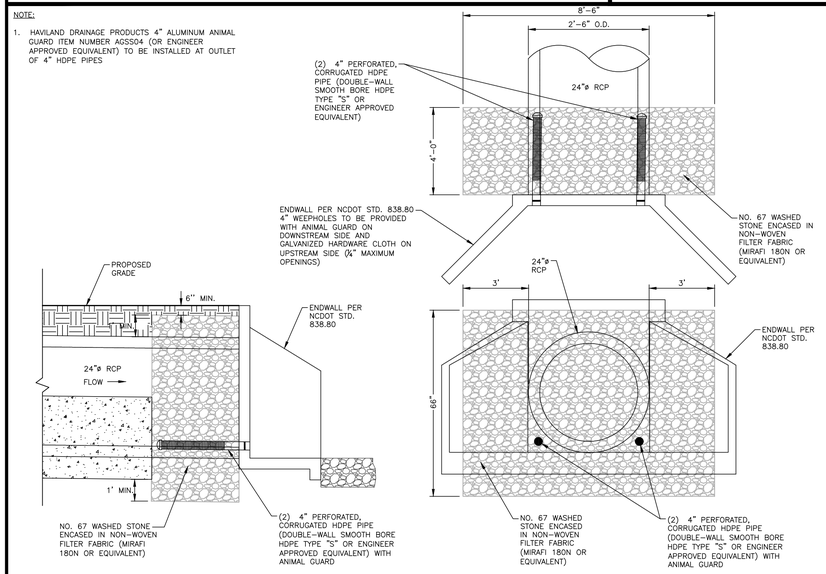

24" SPILLWAY FILTER DETAIL

N.T.S.

NOTES:
INSTALL ALL STEPS PROTRUDING 4" FROM INSIDE FACE OF STRUCTURE WALL.
STEPS DIFFERING IN DIMENSIONS, CONFIGURATION, OR MATERIALS FROM THOSE SHOWN MAY ALSO BE USED PROVIDED THE CONTRACTOR HAS FURNISHED THE ENGINEER WITH DETAILS OF THE PROPOSED STEPS AND HAS RECEIVED WRITTEN APPROVAL FROM THE ENGINEER FOR THE USE OF SUCH STEPS.

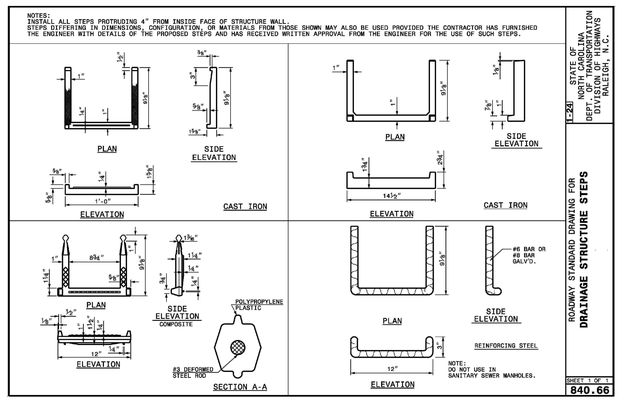

STATE OF NORTH CAROLINA DEPARTMENT OF TRANSPORTATION DIVISION OF HIGHWAYS RALEIGH, N.C.

[1-26] ROADWAY STANDARD DRAWING FOR **DRAINAGE STRUCTURE STEPS**

SHEET 1 OF 1 **840.66**

NOTE:

1. AS AN ALTERNATE TO A CONCRETE CRADLE UNDER THE BARREL PIPE (THIS DETAIL), THE CONTRACTOR MAY CHOOSE TO ELIMINATE THE CONCRETE CRADLE AND USE COMPACTED BACKFILL IF THE ON–SITE GEOTECHNICAL ENGINEER WILL PROVIDE A NC PE SEALED LETTER CERTIFYING THAT THE COMPACTION UNDER, AROUND, AND ABOVE THE BARREL MEETS THE SPECIFICATIONS OF THE EMBANKMENT COMPACTION REQUIREMENTS AND MOISTURE CONTENT. THIS CERTIFICATION LETTER MUST BE SUBMITTED TO THE DESIGN ENGINEER BEFORE AS–BUILT CERTIFICATION OF THE FACILITY. THIS SEPARATE CERTIFICATION MUST BE SPECIFIC TO THE BARREL PIPE FOR THE FACILITY, AND MUST CLEARLY STATE THAT ALL SOIL MATERIAL UNDER, AROUND, AND ABOVE THE BARREL PIPE MEETS THE BERM MATERIAL SPECIFICATIONS. THIS CERTIFICATION IS TO INCLUDE REFERENCE TO BOTH MATERIAL AND COMPACTION, AND MUST STATE THAT ALL MATERIALS UNDER, AROUND, AND ABOVE THE BARREL HAVE BEEN COMPACTED PER THE BERM MATERIAL SPECIFICATIONS (AT LEAST 95% OF MAXIMUM DRY DENSITY USING ASTM D698 STANDARD PROCTOR) WITH NO VOID SPACES PRESENT. THE CONTRACTORS INTENT TO UTILIZE THIS ALTERNATIVE MUST BE STATED PRIOR TO CONSTRUCTION TAKING PLACE. THIS CONTRACTORS CERTIFICATION MUST BE PRESENTED TO THE DESIGN ENGINEER BEFORE AN AS–BUILT CERTIFICATION CAN BE ISSUED FOR THIS FACILITY.
2. CONTRACTOR SHALL PROVIDE A JOINT IN THE OUTLET BARREL NO MORE THAN 5–FT FROM THE RISER.

BARREL PIPE CONCRETE CRADLE CONSTRUCTION SEQUENCE

1. IF OPTION A IS CHOSEN FROM NOTE 9 OF THE OUTLET STRUCTURE MATERIAL SPECIFICATIONS, THEN BRING GRADE OF DAM EMBANKMENT TO SPRINGLINE OF PIPE ELEVATION. IF OPTION B IS CHOSEN FROM NOTE 9 OF THE OUTLET STRUCTURE MATERIAL SPECIFICATIONS, THEN CONSTRUCT FORMWORK FOR CONCRETE CRADLE ON EXISTING GRADE.
2. IF OPTION A IS CHOSEN FROM NOTE 9 OF THE OUTLET STRUCTURE MATERIAL SPECIFICATIONS, THEN EXCAVATE TRENCH FOR CRADLE AND BARREL PER DIMENSIONS ON DRAWINGS. IF OPTION B IS CHOSEN FROM NOTE 9 OF THE OUTLET STRUCTURE MATERIAL SPECIFICATIONS, PROCEED TO STEP 3 BELOW.
3. PLACE BARREL PIPE ON CONCRETE BLOCKS TO GRADE. AT THIS STEP, CONTRACTOR SHALL WRAP A DOUBLE LAYER OF NON–WOVEN GEOTEXTILE FABRIC AROUND EACH JOINT OF THE 24"ø O–RING RCP BARREL IN 2' WIDE STRIPS CENTERED ON JOINT.
4. PLACE CONCRETE FOR CRADLE FOR EACH SECTION FROM ONE SIDE OF THE TRENCH. ALLOW CONCRETE TO FILL ENTIRE AREA UNDER PIPE AND PIPE HAUNCHES AS TO LEAVE NO VOIDS UNDER THE PIPE BEFORE PLACING CONCRETE ON THE OPPOSITE SIDE OF THE TRENCH. PLACE ENTIRE CRADLE AS ONE LIFT (VERTICALLY) PER DRAWINGS.
5. CONCRETE CRADLE MAY BE ELIMINATED PER RECOMMENDATION FROM THE ON–SITE GEOTECHNICAL ENGINEER. ANY DEVIATION FROM THIS DETAIL SHALL BE SUBMITTED TO AND REVIEWED BY THE DESIGN ENGINEER PRIOR TO IMPLEMENTATION. IF THE CRADLE IS ELIMINATED, THEN A LETTER FROM AN NC PE CERTIFYING THAT ALL SOIL MATERIAL UNDER, AROUND, AND ABOVE THE BARREL PIPE MEETS THE BERM MATERIAL SPECIFICATIONS IS REQUIRED.
6. ALLOW CRADLE TO CURE FOR A MINIMUM OF 7 DAYS BEFORE ANY VIBRATING COMPACTION EQUIPMENT IS USED IN THE VICINITY OF THE BARREL PIPE.
7. TRENCH TO BE BACKFILLED IN 5" LIFTS WHEN COMPACTION IS BY HAND. BACKFILL IS IN 8" LIFTS WHEN CONDUCTED BY MACHINE. MINIMUM OF 2 FEET COVER MUST BE PRESENT ON 24"ø RCP BEFORE DRIVING OVER WITH HEAVY EQUIPMENT.

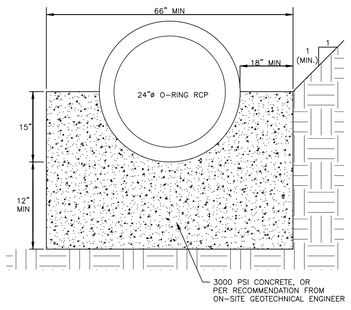

24" CONCRETE CRADLE DETAIL

N.T.S.

NOTES:

1. ALL REINFORCING STEEL IN RISER ANTI–FLOTATION BLOCK TO BE GRADE 60 #6 BARS FOR HORIZONTAL CROSSING AND GRADE 60 #4 BARS FOR VERTICAL CONNECTIONS.
2. INSIDE OF RISER BOTTOM TO BE FORMED WITH NON–SHRINK GROUT TO INVERT ELEVATION OF BARREL.
3. ALL PIPE PENETRATIONS THROUGH THE CONCRETE RISER STRUCTURE SHALL BE MADE WATERTIGHT.

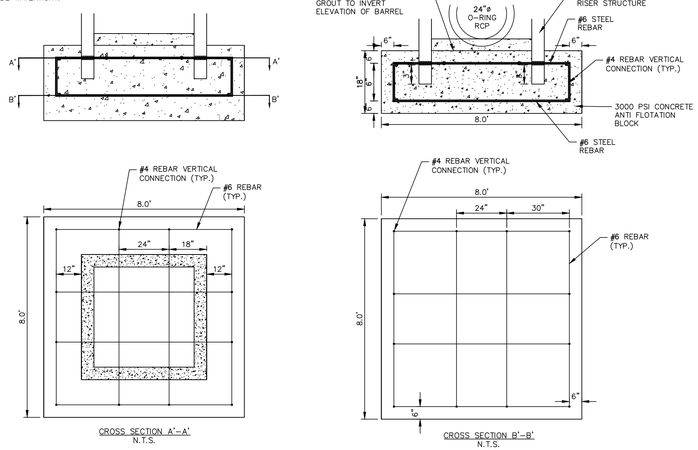

RISER/ANTI–FLOTATION BLOCK CONNECTION

N.T.S.

FINAL DRAWING - NOT RELEASED FOR CONSTRUCTION

M:\Projects\AWH\AWH-20000\04-Production\Water Resources\South Site\Current Drawings\SCM CDs\AWH-20000 - SCM K.dwg, 12/13/2023 12:08:20 PM, Tommy Daboll

McADAMS
The John R. McAdams Company, Inc.
2905 Meridian Parkway
Durham, NC 27713

phone 919. 361. 5000
fax 919. 361. 2269
license number: C-0293, C-187

www.mcadamsco.com

CLIENT

ASHTON RALEIGH RESIDENTIAL, LLC.
900 RIDGEFIELD DRIVE, SUITE 335
RALEIGH, NORTH CAROLINA 27609
PHONE: 919. 422. 7663
CONTACT: BOB MISHLER

ASHTON WOODS

THE POINT
PHASES 8 AND 14
CONSTRUCTION DRAWINGS - PACKAGE 3
EAST YOUNG STREET
TOWN OF ROLESVILLE, WAKE FOREST TOWNSHIP,
WAKE COUNTY, NORTH CAROLINA

CD XX-XX

NORTH CAROLINA PROFESSIONAL SEAL 043300 ENGINEER DANIEL C. WIEBKE
NOT FOR CONSTRUCTION

REVISIONS

NO. DATE

PLAN INFORMATION

PROJECT NO.	AWH-20000
FILENAME	AWH20000 - SCM K
CHECKED BY	DCW
DRAWN BY	TKD
SCALE	AS SHOWN
DATE	12. 13. 2023

SHEET

STORMWATER CONTROL MEASURE 'K' DETAILS

C9.02K

STORMWATER CONTROL MEASURE 'K' LANDSCAPE SPECIFICATIONS

LEGEND

QTY.	SYM.	SCIENTIFIC NAME	COMMON NAME	HATCH	TYPE	SPACING
SHALLOW WATER						
216	IV	IRIS VIRGINIANA	BLUE FLAG IRIS		4-INCH CONTAINER	24" O.C.
181	PC	PONTEDERIA CORDATA	PICKEREL WEED		4-INCH CONTAINER	24" O.C.
215	ST	SCHOENOPLECTUS TABERNAEMONTANI	SOFT-STEM BULRUSH		4-INCH CONTAINER	24" O.C.
SHALLOW LAND						
203	CS	CAREX SPP.	SEDGES		4-INCH CONTAINER	24" O.C.
141	CA	CRINUM AMERICANUM	AMERICAN CRINUM LILY		4-INCH CONTAINER	24" O.C.
132	HA	HIBISCUS ACULEATUS	PINELANDS MALLOW		4-INCH CONTAINER	24" O.C.

SEEDBED PREPARATION

1. CHISEL COMPACTED AREAS AND SPREAD TOPSOIL 3-4 INCHES DEEP OVER ADVERSE SOIL CONDITIONS. TOPSOIL SHOULD BE INCORPORATED INTO THE FINAL GRADING OF THE BASIN SIDE SLOPES AND AQUATIC SHELF. CONTRACTOR SHOULD SCARIFY THE TOP 3-4 INCHES OF THE COMPACTED FILL TO PROMOTE BONDING WITH TOPSOIL.
2. RIP THE ENTIRE AREA TO 6 INCHES DEPTH.
3. REMOVE ALL LOOSE ROCK, ROOTS, AND OTHER OBSTRUCTIONS LEAVING SURFACE REASONABLY SMOOTH AND UNIFORM.
4. PER ONE TIME ONLY, APPLY AGRICULTURAL LIME, FERTILIZER, AND SUPERPHOSPHATE UNIFORMLY AND MIX WITH SOIL.
5. CONTINUE TILLAGE UNTIL A WELL-PULVERIZED, FIRM REASONABLY UNIFORM SEEDBED IS PREPARED 4 TO 6 INCHES DEEP.
6. SEED ON A FRESHLY PREPARED SEEDBED AND COVER.
7. MULCH IMMEDIATELY AFTER SEEDING AND ANCHOR MULCH.
8. INSPECT ALL SEEDED AREAS AND MAKE NECESSARY REPAIRS OR RESEEDINGS WITHIN THE PLANTING SEASON, IF POSSIBLE. AFTER PERMANENT COVER IS ESTABLISHED.
9. CONSULT CONSERVATION INSPECTOR ON MAINTENANCE TREATMENT.

TEMPORARY SEEDING SCHEDULE

SEEDING DATE	SEEDING MIXTURE	APPLICATION RATE
JAN 1 - MAY 1	RYE (GRAIN)	120 LBS/AC
	KOBE LESPEDEZA	50 LBS/AC
MAY 1 - AUG 15	GERMAN MILLET	40 LBS/AC
AUG 15 - DEC 30	RYE (GRAIN)	120 LBS/AC

SOIL AMENDMENTS
FOLLOW RECOMMENDATIONS OF SOIL TESTS OR APPLY 2,000 LB/AC GROUND AGRICULTURE LIMESTONE AND 750 LB/AC 10-10-10 FERTILIZER (FROM AUG 15 - DEC 30, INCREASE 10-10-10 FERTILIZER TO 1000 LB/AC).

MULCH
APPLY 4000 LB/AC STRAW. ANCHOR STRAW BY TACKING WITH ASPHALT, NETTING, OR A MULCH ANCHORING TOOL. A DISK WITH BLADES SET NEARLY STRAIGHT CAN BE USED AS A MULCH ANCHORING TOOL.

MAINTENANCE
JAN 1 - AUG 15: REFERTILIZE IF GROWTH IS NOT FULLY ADEQUATE. RESEED, REFERTILIZE, AND MULCH IMMEDIATELY FOLLOWING EROSION OR OTHER DAMAGE.

AUG 15 - DEC 30: REPAIR AND REFERTILIZE DAMAGED AREAS IMMEDIATELY. TOP DRESS WITH 50 LB/AC OF NITROGEN IN MARCH. IF IT IS NECESSARY TO EXTEND TEMPORARY COVER BEYOND JUNE 15, OVERSEED WITH 50 LB/AC KOBE LESPEDEZA IN LATE FEBRUARY OR EARLY MARCH.

NOTE: USE THE TEMPORARY SEEDING SCHEDULE ONLY WHEN DATE IS NOT CORRECT TO USE THE PERMANENT SEEDING SCHEDULE.

PERMANENT SEEDING SCHEDULE (DAM EMBANKMENTS)

SEEDING DATE	SEEDING MIXTURE OPTIONS (CHOOSE ONE)	APPLICATION RATE
MAY 1 - AUG 31	CENTIPEDE RAW	30 LBS/AC
APRIL 1 - SEPT 1	SUMMER MIX (80% HULLED BERMUDA/20% MILLET)	200 LBS/AC
OCT 1 - MARCH 1	FALL MIX (80% TALL FESCUE/20% ANNUAL RYEGRASS)	200 LBS/AC

SOIL AMENDMENTS
FOLLOW RECOMMENDATIONS OF SOIL TESTS OR APPLY 4,000 LB/AC GROUND AGRICULTURE LIMESTONE AND 1000 LB/AC 10-10-10 FERTILIZER.

MULCH
APPLY 4000 LB/AC STRAW. ANCHOR STRAW BY TACKING WITH ASPHALT, NETTING, OR A MULCH ANCHORING TOOL. A DISK WITH BLADES SET NEARLY STRAIGHT CAN BE USED AS A MULCH ANCHORING TOOL.

MAINTENANCE
INSPECT AND REPAIR MULCH FREQUENTLY. REFERTILIZE IN LATE WINTER OF THE FOLLOWING YEAR; USE SOIL TESTS OR APPLY 150 LB/AC 10-10-10 FERTILIZER. MOW REGULARLY TO A HEIGHT OF 2-4 INCHES.

NOTE: PERMANENT SEEDING SCHEDULE IS FOR SLOPES OF THE BASIN AND TOP OF BERM.

PLANTING INSTRUCTIONS

PLANTING TECHNIQUES
A. ENSURE THAT ROOTS, ONCE REMOVED FROM POT, ARE STRAIGHTENED AND FACE DOWNWARD.
B. CREATE PLANTING AREA FOR EACH PLANT AND EXCAVATE PIT.
C. PLACE PLANTS IN PIT ENSURING ROOTS ARE FACING COMPLETELY DOWNWARD.
D. HEEL IN SOIL AROUND PLANT AND PROCEED TO NEXT PLANTING LOCATION.
E. NEWLY PLANTED PLANTS NEED TO BE FASTENED TO THE SUBSTRATE FOR THE ESTABLISHMENT OF NEW ROOTS.
F. ROOTS SHALL BE SPREAD IN THEIR NORMAL POSITION. ALL BROKEN OR FRAYED ROOTS SHALL BE CUT OFF CLEANLY.
G. THE DIAMETER OF THE PITS FOR ALL VEGETATIVE STOCK SHALL BE AT LEAST THREE TIMES THE DIAMETER OF THE ROOT MASS. PLANT PIT WALL SHALL BE SCARIFIED PRIOR TO PLANT INSTALLATION.
H. SET THE PLANTS UPRIGHT, IN THE CENTER OF THE PIT. THE BOTTOM OF THE ROOT MASS SHOULD BE RESTING ON UNDISTURBED SOIL.
I. PLACE THE BACKFILL AROUND THE BASE AND SIDES OF THE ROOT MASS, AND WORK EACH LAYER TO SETTLE BACKFILL AND TO ELIMINATE VOIDS AND AIR POCKETS. WHEN PIT IS APPROXIMATELY 2/3 FULL, WATER THOROUGHLY BEFORE PLACING REMAINDER OF THE BACKFILL. WATER AGAIN AFTER PLACING FINAL LAYER OF BACKFILL.
J. BROKEN OR DAMAGED PARTS WILL BE CUT BACK TO UNDAMAGED TISSUE, LEAVING AS MUCH GREEN BASAL TISSUE AS POSSIBLE ABOVE THE ROOTS. IF MORE THAN FIFTY PERCENT (50%) OF THE PLANT IS DAMAGED THEN CONTRACTOR SHALL REPLACE THE PLANT.

CONTAINER STOCK / BARE ROOT
A. STOCK SHALL HAVE BEEN GROWN IN A CONTAINER LONG ENOUGH FOR THE ROOT SYSTEM TO HAVE DEVELOPED SUFFICIENTLY TO HOLD ITS SOIL TOGETHER ONCE REMOVED FROM THE CONTAINER.
B. CONTAINER PLANTS WILL NEED TO BE WATERED REGULARLY AND PLACED IN SHADY CONDITIONS UNTIL PLANTING OCCURS.
C. BARE ROOT PLANTS ARE FOR IMMEDIATE PLANTING, OTHERWISE SEE D) BELOW.
D. IF BARE ROOTS SPECIMENS ARE NOT TO BE PLANTED WITHIN FOUR (4) DAYS, TEMPORARY HOLDING OF BARE ROOT SPECIMENS ARE TO BE COVERED ENTIRELY BY A SUITABLE MEDIUM (ETC. SOIL, SAWDUST, MULCH OR THE LIKE) AND WATERED REGULARLY SO AS TO NOT DRY OUT.

PLANT LOCATIONS
A. NEW PLANTINGS SHALL BE LOCATED WHERE SHOWN ON PLAN EXCEPT WHERE CHANGES HAVE BEEN MADE IN PROPOSED CONSTRUCTION.
B. NECESSARY ADJUSTMENTS SHALL BE MADE ONLY AFTER APPROVAL BY THE OWNER OR THE OWNER'S REPRESENTATIVE.

WATER
WATER SHALL BE POTABLE AND SHALL NOT CONTAIN ELEMENTS TOXIC TO PLANT LIFE.

PLANTING SCHEDULE

1. ONCE THE GRADING IS COMPLETE, THE CONTRACTOR SHALL REQUEST AN ON-SITE INSPECTION AND AN AS-BUILT SURVEY PRIOR TO INSTALLATION OF THE STORMWATER MANAGEMENT FACILITY PLANTS. IF THE CONTRACTOR PLANTS THE PROPOSED VEGETATION PRIOR TO AN AS-BUILT SURVEY (AND SUBSEQUENT APPROVAL), ANY CHANGES TO THE GRADING / RE-PLANTING OF PLANTS WILL BE AT THE CONTRACTOR'S EXPENSE.
2. ONCE THE ENGINEER HAS APPROVED THE AS-BUILT GRADING, THE CONTRACTOR SHALL PLANT THE PROPOSED STORMWATER MANAGEMENT FACILITY PLANTS SHOWN ON THE LANDSCAPE PLAN FOR THE FACILITY. AFTER COMPLETION OF THE PLANTING, THE LANDSCAPE CONTRACTOR SHALL PROVIDE A LETTER TO THE ENGINEER CERTIFYING THAT THE PLANTS HAVE BEEN INSTALLED PER THE APPROVED STORMWATER MANAGEMENT FACILITY PLANTING PLAN.
3. OPTIMAL PLANTING PERIODS RANGE APPROXIMATELY FROM APRIL 15TH THRU JUNE 30TH AND SEPTEMBER 1ST THRU OCTOBER 31ST. FOR FINAL DETERMINATION OF THE SITE'S PLANTING PERIOD, THE CONTRACTOR SHALL COORDINATE WITH A LANDSCAPE PROFESSIONAL REGARDING SCHEDULING FOR PLANT INSTALLATION.
4. IT IS RECOMMENDED THAT THE CONTRACTOR TAKE MEASURES TO PREVENT WILDLIFE FROM DAMAGING OR CONSUMING WETLAND PLANTINGS.

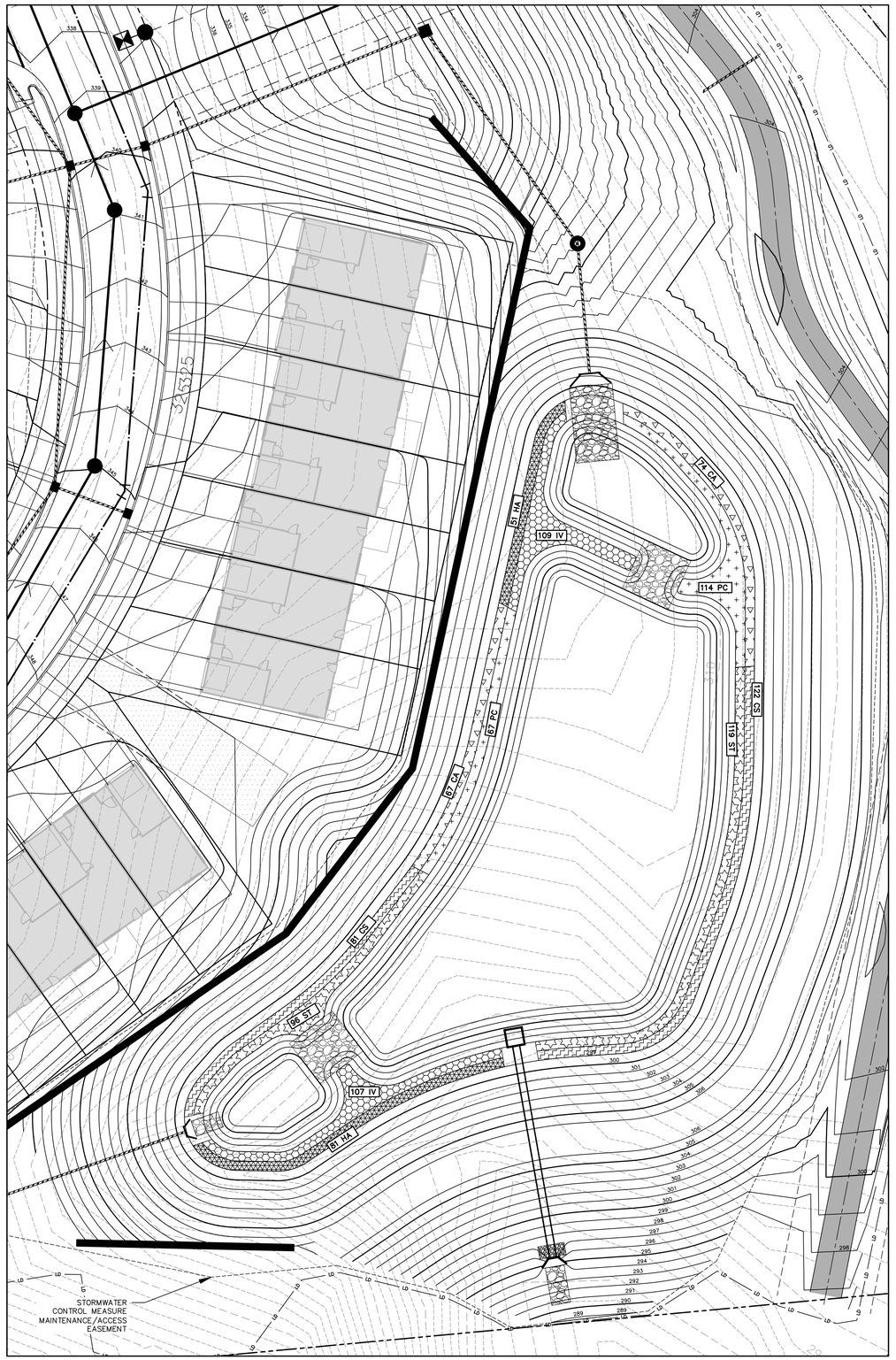

STORMWATER CONTROL MEASURE 'K' PLAN VIEW
1" = 20'

GRAPHIC SCALE
0 10 20 40
1 inch = 20 ft.

FINAL DRAWING - NOT RELEASED FOR CONSTRUCTION

McADAMS
The John R. McAdams Company, Inc.
2905 Meridian Parkway
Durham, NC 27713

phone 919. 361. 5000
fax 919. 361. 2269
license number: C-0293, C-187

www.mcadamsco.com

CLIENT

ASHTON RALEIGH RESIDENTIAL, LLC.
900 RIDGEFIELD DRIVE, SUITE 335
RALEIGH, NORTH CAROLINA 27609
PHONE: 919. 422. 7663
CONTACT: BOB MISHLER

ASHTON WOODS

THE POINT
PHASES 8 AND 14
CONSTRUCTION DRAWINGS - PACKAGE 3
EAST YOUNG STREET
TOWN OF ROLESVILLE, WAKE FOREST TOWNSHIP, WAKE COUNTY, NORTH CAROLINA

CD XX-XX

NORTH CAROLINA PROFESSIONAL ENGINEER SEAL 043300 DANIEL C. WIEBE — NOT FOR CONSTRUCTION

REVISIONS

NO. DATE

PLAN INFORMATION

PROJECT NO.	AWH-20000
FILENAME	AWH20000 - SCM K
CHECKED BY	DCW
DRAWN BY	TKD
SCALE	1"=20'
DATE	12. 13. 2023

SHEET

STORMWATER CONTROL MEASURE 'K' LANDSCAPE PLANS

C9.03K

M:\Projects\AWH\AWH-20000\04-Production\Water Resources\South Site\Current Drawings\SCM CDs\AWH-20000 - SCM K.dwg, 12/13/2023 12:08:56 PM, Tommy Daboll

GENERAL NOTES

1. PRIOR TO CONSTRUCTION, ANY DISCREPANCIES IN THE PLANS AND NOTES SHALL BE BROUGHT TO THE DESIGN ENGINEER'S ATTENTION IMMEDIATELY.

2. THE FINAL CERTIFICATION FOR THIS FACILITY WILL INCLUDE A CERTIFICATION BY THE ON-SITE GEOTECHNICAL ENGINEER THAT THE PROJECT WAS CONSTRUCTED PER THE APPROVED PLANS. IT IS THE RESPONSIBILITY OF THE CONTRACTOR TO COORDINATE WITH THE ON-SITE GEOTECHNICAL ENGINEER FOR OBSERVATION AND TESTING SUCH THAT THE ON-SITE GEOTECHNICAL ENGINEER CAN CERTIFY THE CONSTRUCTION OF THE DAM EMBANKMENT AND SPILLWAY. THIS CERTIFICATION MUST ADDRESS THE TESTING FOR MATERIALS AND COMPACTION OF THE DAM EMBANKMENT AND SPILLWAY.

3. ALL CONSTRUCTION ACTIVITY RELATED TO THE PROPOSED STORMWATER CONTROL MEASURE SHALL BE PER THE DETAILS AND SPECIFICATIONS SHOWN IN THESE DRAWINGS. SOILS, COMPACTION, AND OTHER MISCELLANEOUS DETAILS AND SPECIFICATIONS MAY BE MODIFIED PER THE RECOMMENDATIONS OF THE ON-SITE GEOTECHNICAL ENGINEER. HOWEVER, PRIOR TO IMPLEMENTATION, THE DESIGN ENGINEER SHALL BE NOTIFIED OF ANY DEVIATION FROM THESE DESIGN DRAWINGS, INCLUDING SHOP DRAWINGS FOR ANY PROPOSED MODIFICATION.

4. DURING THE INITIAL STAGES OF CONSTRUCTION, THE STORMWATER CONTROL MEASURE MAY BE USED AS A SEDIMENT BASIN FOR EROSION CONTROL PURPOSES. IF SO, THE CONTRACTOR SHALL FOLLOW THE GENERAL CONSTRUCTION SEQUENCE BELOW:
   A. THE CONTRACTOR SHALL CONSTRUCT THE ENTIRE FACILITY (PERMANENT OUTLET STRUCTURE, DAM, ETC.) WITH THE EXCEPTION OF THE INTERIOR FINE GRADING FOR THE FACILITY. THE INTERIOR FINE GRADING WILL BE CONSTRUCTED ONCE THE EROSION CONTROL PHASE IS COMPLETE.
   B. THE TEMPORARY DRAW DOWN RISER (OR SKIMMER) SHALL BE CONNECTED TO THE PERMANENT 6"Ø DIP DRAIN PIPE.
   C. ONCE THE UPSTREAM DRAINAGE AREA IS STABILIZED AND THE EROSION CONTROL INSPECTOR APPROVES THE REMOVAL OF THE SEDIMENT BASIN, THE CONTRACTOR SHALL REMOVE THE TEMPORARY DRAW DOWN RISER (OR SKIMMER) AND CLEAN OUT THE BASIN. ALL SEDIMENT, TRASH, ETC. SHALL BE DISPOSED OF PROPERLY (I.E. - PLACED IN A LANDFILL) AND NOT STOCKPILED IN AN AREA WHERE WATER QUALITY COULD BE ADVERSELY AFFECTED.
   D. ONCE THE BASIN IS CLEANED OUT, AND ALL EROSION CONTROL DEVICES REMOVED, THE CONTRACTOR SHALL CONSTRUCT THE INTERIOR GRADING SHOWN ON THIS SHEET.
   E. ONCE THE GRADING IS COMPLETE, THE CONTRACTOR SHALL REQUEST AN ON-SITE INSPECTION AND AN AS-BUILT SURVEY PRIOR TO INSTALLATION OF THE STORMWATER CONTROL MEASURE PLANTS. IF THE CONTRACTOR PLANTS THE PROPOSED VEGETATION PRIOR TO AN AS-BUILT SURVEY (AND SUBSEQUENT APPROVAL), ANY CHANGES TO THE GRADING / RE-PLANTING OF PLANTS WILL BE AT THE CONTRACTOR'S EXPENSE.
   F. ONCE THE ENGINEER HAS APPROVED THE AS-BUILT GRADING, THE CONTRACTOR SHALL PLANT THE PROPOSED STORMWATER CONTROL MEASURE PLANTS SHOWN ON THE LANDSCAPE PLAN FOR THE FACILITY. AFTER COMPLETION OF THE PLANTING, THE LANDSCAPE CONTRACTOR SHALL PROVIDE A LETTER TO THE ENGINEER CERTIFYING THAT THE PLANTS HAVE BEEN INSTALLED PER THE APPROVED STORMWATER CONTROL MEASURE PLANTING PLAN.

6. ALL OSHA REQUIREMENTS FOR EXCAVATIONS (SHORING, DEPTH, ETC.) ARE THE RESPONSIBILITY OF THE CONTRACTOR. IF REQUIRED, THE CONTRACTOR SHALL PROVIDE AN EXCAVATION PLAN TO BE SEALED BY A NC P.E. IT IS THE RESPONSIBILITY OF THE CONTRACTOR TO DETERMINE IF AN EXCAVATION PLAN IS REQUIRED. THE JOHN R. MCADAMS COMPANY ASSUMES NO RESPONSIBILITY FOR ANY EXCAVATION DESIGN RELATED TO SAFETY OR OSHA REQUIREMENTS.

7. ON-SITE GEOTECHNICAL ENGINEER TO DETERMINE IF IN-SITU SOILS ENCOUNTERED WOULD MAINTAIN A STORMWATER CONTROL MEASURE PERMANENT POOL AT DESIGN ELEVATION. IF HIGHLY PERMEABLE SOILS ARE ENCOUNTERED THAT WOULD NOT MAINTAIN THE PERMANENT POOL ELEVATION AS DESIGNED, A CLAY LINER MAY BE REQUIRED TO MAINTAIN A PERMANENT POOL OF WATER IN THE STORMWATER CONTROL MEASURE. FINAL DETERMINATION IF A CLAY LINER IS NEEDED SHALL BE THE RESPONSIBILITY OF THE ON-SITE GEOTECHNICAL ENGINEER. UPON DETERMINATION OF HIGHLY PERMEABLE SOIL CONDITIONS, ON-SITE GEOTECHNICAL ENGINEER WILL INFORM THE DESIGN ENGINEER AND RECOMMEND LINER SPECIFICATIONS.

8. IT IS ANTICIPATED THAT DEWATERING WILL BE NECESSARY IN THE EXCAVATION AREAS (E.G. - EMBANKMENT SUB GRADE, INTERIOR PORTIONS OF THE STORMWATER CONTROL MEASURE, KEY TRENCH, ETC.). THEREFORE, THE CONTRACTOR SHALL FURNISH, INSTALL, OPERATE, AND MAINTAIN ANY PUMPING EQUIPMENT, ETC. NEEDED FOR REMOVAL OF WATER FROM VARIOUS PARTS OF THE STORMWATER CONTROL MEASURE SITE. DURING PLACEMENT OF FILL WITHIN THESE AREAS, THE CONTRACTOR SHALL KEEP THE WATER LEVEL BELOW THE BOTTOM OF THE EXCAVATION / CONSTRUCTION AREAS. THE MANNER IN WHICH THE WATER IS REMOVED SHALL BE SUCH THAT THE EXCAVATION BOTTOM AND SIDE SLOPES ARE STABLE, WITH NO SEDIMENT DISCHARGED FROM THE SITE (I.E. PUMPED WATER MAY NEED TO BE DIRECTED TO AN APPROVED EROSION CONTROL DEVICE SUCH AS A DIRT BAG (ACF ENVIRONMENTAL), OR ENGINEER APPROVED EQUIVALENT, PRIOR TO DISCHARGE).

9. THE GRADES SHOWN ON THIS PLAN ARE FINISHED GRADES. IF THE EXISTING SOIL LAYER AFTER CONSTRUCTION / COMPACTION IS NOT DETERMINED SUITABLE BY A LANDSCAPE PROFESSIONAL FOR THE WET POND PLANTINGS, THEN THE CONTRACTOR SHALL AMEND THE PLANTING AREA OF THE WET POND AS DIRECTED BY A LANDSCAPE PROFESSIONAL.

10. PRIOR TO TOPSOIL INSTALLATION, THE CONTRACTOR SHALL SCARIFY THE TOP 2"-3" OF THE BERM SECTION TO PROMOTE BONDING OF THE TOPSOIL WITH THE COMPACTED FILL. THE TOPSOIL DEPTH SHALL RANGE FROM 3"-4" ON THE DAM EMBANKMENT AND AQUATIC SHELF. PLEASE NOTE THE TOPSOIL SHALL BE AMENDED, AS DIRECTED BY A LANDSCAPE PROFESSIONAL, PRIOR TO INSTALLATION ON THE EMBANKMENT AND AQUATIC SHELF.

11. THE CONTRACTOR SHALL REFER TO THE LANDSCAPE PLAN FOR THE PERMANENT PLANTING PLAN/SCHEDULE FOR THIS FACILITY. CONTRACTOR SHALL COORDINATE WITH A LANDSCAPE PROFESSIONAL REGARDING SCHEDULING FOR PLANT INSTALLATION. PLEASE NOTE THAT NO TREES/SHRUBS OF ANY TYPE MAY BE PLANTED ON THE PROPOSED DAM EMBANKMENT (FILL AREAS).

OUTLET STRUCTURE MATERIAL SPECIFICATIONS

1. THE 36"Ø RCP OUTLET BARREL SHALL BE CLASS III RCP, MODIFIED BELL AND SPIGOT, MEETING THE REQUIREMENTS OF ASTM C76-LATEST. THE PIPES SHALL HAVE CONFINED O-RING RUBBER GASKET JOINTS MEETING ASTM C-443-LATEST. THE PIPE JOINTS SHALL BE TYPE R-4.

2. THE STRUCTURAL DESIGN FOR THE 5' X 5' (INTERNAL DIMENSIONS) RISER BOX WITH EXTENDED BASE SHALL BE BY OTHERS. PRIOR TO ORDERING THE STRUCTURES, THE CONTRACTOR SHALL PROVIDE, TO THE DESIGN ENGINEER FOR REVIEW, SHOP DRAWINGS AND SUPPORTING STRUCTURAL CALCULATIONS SEALED BY A P.E. REGISTERED IN NORTH CAROLINA DEMONSTRATING THE PERTINENT VERTICAL LOADS ARE SUPPORTED BY THE CONCRETE RISER STRUCTURE.

3. THE RISER BOX OUTLET STRUCTURE SHALL BE PROVIDED WITH STEPS 16" ON CENTER. STEPS SHALL BE PROVIDED ON THE INNER WALL OF THE RISER BOX. STEPS SHALL BE IN ACCORDANCE WITH NCDOT STD. 840.66. PLEASE REFER TO SHEET C9.02L FOR LOCATION OF THE RISER STEPS. NOTE THE STEPS SHALL LINE UP WITH THE ACCESS HATCH OF THE TRASH RACK.

4. THE CONCRETE ANTI-FLOTATION BLOCK SHALL BE CAST-IN-PLACE. STEEL REINFORCEMENT AND CONNECTION TO THE RISER SHALL BE PROVIDED IN ACCORDANCE WITH THE DETAIL ON SHEET C9.02L. THE CONTRACTOR SHALL ENSURE THE WEIGHT OF THE ENTIRE RISER STRUCTURE IS GREATER THAN OR EQUAL TO XX,XXX LBS. IN LIEU OF CAST-IN-PLACE, THE CONTRACTOR MAY OPT FOR A PRECAST ANTI-FLOTATION BLOCK. SHOP DRAWINGS FOR THE PRECAST BLOCK SHALL BE SUBMITTED TO THE ENGINEER FOR REVIEW. THE PRECAST ANTI-FLOTATION BLOCK SHALL HAVE A SHIPPING WEIGHT OF XX,XXX LBS.

5. THE RISER BOX JOINTS SHALL BE SEALED USING BUTYL RUBBER SEALANT CONFORMING TO ASTM-C990-LATEST. IF NECESSARY, THE CONTRACTOR SHALL INCORPORATE A WATERSTOP INTO THE RISER BOX JOINT TO ENSURE A WATERTIGHT CONNECTION. THE CONTRACTOR SHALL PARGE JOINTS ON BOTH THE INSIDE AND OUTSIDE WITH NON-SHRINK GROUT AND INSTALL GALVANIZED STEEL STRAPS PER DETAIL ON SHEET C9.01L.

6. PRIOR TO ORDERING, THE CONTRACTOR SHALL SUBMIT TRASH RACK SHOP DRAWINGS TO THE ENGINEER FOR REVIEW. CONTRACTOR SHALL ENSURE THAT AN ACCESS HATCH IS PROVIDED WITHIN THE TRASH RACK (SEE DETAIL FOR LOCATION) THAT WILL ALLOW FOR FUTURE MAINTENANCE ACCESS. CONTRACTOR SHALL ALSO PROVIDE A CHAIN AND LOCK FOR SECURING THE ACCESS HATCH. NOTE THE ACCESS HATCH SHALL LINE UP WITH THE ACCESS STEPS AFTER INSTALLATION.

7. ALL POURED CONCRETE SHALL MEET THE FOLLOWING SPECIFICATIONS UNLESS OTHERWISE NOTED:

   -MINIMUM 3000 PSI (28 DAY)
   -SLUMP = 3" - 5"
   -ENTRAINED AIR = 5% - 7%

   PLEASE NOTE NO CONCRETE SHALL BE POURED WHEN THE AMBIENT AIR TEMPERATURES ARE EXPECTED TO BE ABOVE 85°F OR BELOW 40°F. CAST-IN-PLACE CONCRETE SHALL BE "WET CURED" AFTER FINISHING FOR A MINIMUM OF 48 HOURS.

   ON-SITE GEOTECHNICAL ENGINEER TO ENSURE AND CERTIFY ALL POURED CONCRETE MEETS THE ABOVE SPECIFICATIONS.

8. GEOTEXTILE FABRIC FOR THE 36"Ø RCP OUTLET BARREL JOINTS SHALL BE MIRAFI 180N OR ENGINEER APPROVED EQUAL (NON-WOVEN FABRIC).

9. STORMWATER CONTROL MEASURE EMERGENCY DRAW DOWN IS VIA AN 6"Ø PLUG VALVE. THE VALVE SHALL BE A M&H STYLE 1820 ECCENTRIC VALVE OR APPROVED EQUAL. THIS VALVE IS IN ACCORDANCE WITH AWWA C-517, AND SHALL BE OPERABLE FROM TOP OF OUTLET STRUCTURE VIA A HAND WHEEL (SEE DETAIL SHEET C9.01L). THE CONTRACTOR SHALL PROVIDE A REMOVABLE VALVE WRENCH WITH A HAND WHEEL ON TOP FOR OPERATION OF THE 6"Ø PLUG VALVE.

CONSTRUCTION SEQUENCE

1. PRIOR TO CONSTRUCTION, THE OWNER SHALL OBTAIN A LAND DISTURBING (GRADING) PERMIT AND AN "APPROVAL TO CONSTRUCT" FROM THE TOWN OF ROLESVILLE AND ALL OTHER NECESSARY PERMITS FROM APPLICABLE AGENCIES (E.G. 404 / 401 PERMITS)

2. INSTALL ALL SEDIMENT AND EROSION CONTROL MEASURES PER THE APPROVED SEDIMENT AND EROSION CONTROL PLAN. THE CONTRACTOR SHALL MAINTAIN ALL APPROVED SEDIMENT AND EROSION CONTROL MEASURES THROUGHOUT THE ENTIRE PROJECT, AS REQUIRED. THE CONTRACTOR SHALL RECEIVE APPROVAL FROM THE EROSION CONTROL INSPECTOR, AS REQUIRED BY GOVERNING AGENCIES, PRIOR TO ANY CLEARING.

3. CLEAR AND GRUB AREA WITHIN THE LIMITS OF THE PROPOSED DAM CONSTRUCTION. ALL TREES AND THEIR ENTIRE ROOT SYSTEMS MUST BE REMOVED FROM THE DAM FOOTPRINT AREA AND BACKFILLED WITH SUITABLE SOIL MATERIAL. THE BACKFILLED AREAS SHALL BE COMPACTED TO THE SAME STANDARDS AS THE DAM EMBANKMENT. THE REMAINING AREA OF THE EMBANKMENT SHALL BE STRIPPED TO A SUITABLE DEPTH AS DIRECTED BY THE ON-SITE GEOTECHNICAL ENGINEER. ANY RESIDUAL SOILS TO BE LEFT IN PLACE MUST BE WELL SCARIFIED TO PROMOTE BONDING OF THE NEW EMBANKMENT FILL. NO EMBANKMENT MATERIAL SHALL BE PLACED FOR THE DAM OR KEY TRENCH UNTIL APPROVAL OF THE DAM SUBGRADE IS OBTAINED FROM THE ON-SITE GEOTECHNICAL ENGINEER.

4. EXCAVATE FOR THE NEW KEY TRENCH ALONG THE CENTERLINE OF THE PROPOSED DAM EMBANKMENT. THE TRENCH SHALL EXTEND A MINIMUM OF 5 FT BELOW EXISTING GRADE OR 2 FT BELOW THE 36"Ø RCP OUTLET BARREL AND SHALL HAVE A MINIMUM BOTTOM WIDTH OF 5 FEET. THE KEY TRENCH SIDESLOPES SHALL BE A MINIMUM OF 1:1 (H:V). WHEN EXCAVATING THE KEY TRENCH, IF ANY DEBRIS IS ENCOUNTERED TO AN EXTENT THAT SUCH DEBRIS MAY EXIST IN OTHER INSITU PORTIONS OF THE DAM EMBANKMENT, IT SHOULD ALSO BE REMOVED. THE KEY TRENCH SHALL BE COMPACTED TO THE SAME SPECIFICATION LISTED IN ITEM 4 OF THE SECTION TITLED "BERM AND SOIL COMPACTION SPECIFICATIONS." DEPENDING UPON ON-SITE SOIL CONDITIONS ENCOUNTERED DURING EXCAVATION, THE ON-SITE GEOTECHNICAL ENGINEER MAY VARY THE DEPTH AND DIMENSIONS OF THE KEY TRENCH AS DEEMED NECESSARY. THE ON-SITE GEOTECHNICAL ENGINEER SHALL RETAIN DOCUMENTATION OF ANY VARIATION FOR FUTURE AS-BUILT SUBMITTALS TO THE TOWN OF ROLESVILLE.

5. BEGIN PLACEMENT OF BACKFILL WITHIN THE KEY TRENCH. THE KEY TRENCH SHALL BE COMPACTED TO THE SPECIFICATIONS LISTED ITEM 4 OF THE SECTION TITLED "BERM AND SOIL COMPACTION SPECIFICATIONS." THE KEY TRENCH SHALL BE TESTED PER THE SPECIFICATIONS LISTED IN THAT SECTION.

6. PRIOR TO INSTALLATION, SUBGRADE CONDITIONS ALONG THE SPILLWAY PIPES SHOULD BE EVALUATED BY THE ON-SITE GEOTECHNICAL ENGINEER TO ASSESS WHETHER SUITABLE BEARING CONDITIONS EXIST AT THE SUBGRADE LEVEL. SHOULD SOFT OR OTHERWISE UNSUITABLE CONDITIONS BE ENCOUNTERED ALONG THE PIPE ALIGNMENTS, THESE MATERIALS SHOULD BE UNDERCUT AS DIRECTED BY THE GEOTECHNICAL ENGINEER. THE UNDERCUT MATERIALS SHALL BE REPLACED WITH ADEQUATELY COMPACTED STRUCTURAL FILL, LEAN CONCRETE OR FLOWABLE FILL AS DIRECTED BY THE ON-SITE GEOTECHNICAL ENGINEER.

7. IN ORDER TO HELP PROTECT THE SOIL SUBGRADE FROM DETERIORATION (DUE TO EXPOSURE, RAINFALL, SEEPAGE, AND RUNOFF) BEFORE THE CRADLE CAN BE POURED, IT IS STRONGLY RECOMMENDED THAT A 3" TO 4" THICK CONCRETE MUD MAT BE POURED OVER THE SUBGRADE ONCE IT IS APPROVED BY THE ON-SITE GEOTECHNICAL ENGINEER. THE MUD MAT WILL ALSO PROVIDE BEARING FOR THE BLOCKS THAT TEMPORARILY SUPPORT THE SPILLWAY PIPE UNTIL THE CRADLE CAN BE POURED. THE METHOD OF BLOCK SUPPORT FOR THE PIPE PROPOSED BY THE CONTRACTOR SHOULD BE SUBMITTED TO THE JOHN R. MCADAMS COMPANY FOR REVIEW.

8. BEGIN CONSTRUCTION OF THE NEW EMBANKMENT. FILL MATERIALS SHALL BE PLACED IN MAXIMUM 8" THICK LIFTS PRIOR TO COMPACTION, UNLESS DIRECTED OTHERWISE BY THE ON-SITE GEOTECHNICAL ENGINEER. FILL LIFTS SHALL BE CONTINUOUS OVER THE ENTIRE LENGTH OF FILL. IF IT IS NECESSARY, THE EMBANKMENT FILL MATERIAL WILL BE OVERBUILT IN HORIZONTAL LIFTS AND CUT BACK TO FINAL GRADE IN ORDER TO ACHIEVE PROPER COMPACTION.

9. AS CONSTRUCTION OF THE EMBANKMENT MOVES FORWARD, IT WILL BE NECESSARY TO INSTALL THE CONCRETE CRADLE. SEE NOTE ON CRADLE DETAIL (SHEET C9.02L). THIS MAY BE CONSTRUCTED USING ONE OF THE FOLLOWING METHODS:

   A. IF THE PROPOSED STRUCTURAL FILL MATERIAL IS UTILIZED AS THE FORMWORK FOR THE CONCRETE CRADLE, THEN THE STRUCTURAL FILL SHOULD BE INSTALLED AND COMPACTED UP TO THE TOP OF CONCRETE CRADLE ELEVATION. ONCE THE STRUCTURAL FILL REACHES THE NEXT DOWNSTREAM JUNCTION BOX OR HEADWALL AND IS COMPACTED TO THE ELEVATION OF THE TOP OF THE CONCRETE CRADLE, EXCAVATE THE CONCRETE CRADLE TRENCH PER THE PROVIDED DETAILS AND CONSTRUCT THE CONCRETE CRADLE AS PER THE PROVIDED CONCRETE CRADLE DETAIL.

   B. IF THE PROPOSED STRUCTURAL FILL IS NOT UTILIZED AS THE FORMWORK FOR THE CONCRETE CRADLE, THEN PRIOR TO CONSTRUCTING THE STRUCTURAL FILL EMBANKMENT, THE FORMWORK FOR THE CONCRETE CRADLE SHOULD BE INSTALLED ON EXISTING GROUND AND/OR THE MUD MAT. THE CONCRETE CRADLE SHALL BE CONSTRUCTED PER THE PROVIDED DETAILS

10. AS AN ALTERNATE TO A CONCRETE CRADLE UNDER THE BARREL PIPE (SEE SHEET C9.02L), THE CONTRACTOR MAY CHOOSE TO ELIMINATE THE CONCRETE CRADLE AND USE COMPACTED BACKFILL IF THE ON-SITE GEOTECHNICAL ENGINEER WILL PROVIDE A NC PE SEALED LETTER CERTIFYING THAT THE COMPACTION UNDER, AROUND, AND ABOVE THE BARREL MEETS THE SPECIFICATIONS OF THE EMBANKMENT COMPACTION REQUIREMENTS AND MOISTURE CONTENT. THIS CERTIFICATION LETTER MUST BE SUBMITTED TO THE DESIGN ENGINEER PRIOR TO BACKFILL. THIS SEPARATE CERTIFICATION MUST BE SPECIFIC TO THE BARREL PIPE FOR THE FACILITY, AND MUST CLEARLY STATE THAT ALL SOIL MATERIAL UNDER, AROUND, AND ABOVE THE BARREL PIPE MEETS THE BERM AND SOIL COMPACTION SPECIFICATIONS ON THIS SHEET. THIS CERTIFICATION IS TO INCLUDE REFERENCE TO BOTH MATERIAL AND COMPACTION, AND MUST STATE THAT ALL MATERIALS UNDER, AROUND, AND ABOVE THE BARREL HAVE BEEN COMPACTED PER THE BERM MATERIAL SPECIFICATIONS (AT LEAST 95% OF MAXIMUM DRY DENSITY USING ASTM D698 STANDARD PROCTOR) WITH NO VOID SPACES PRESENT. THE CONTRACTORS INTENT TO UTILIZE THIS ALTERNATIVE MUST BE STATED PRIOR TO CONSTRUCTION TAKING PLACE. THIS CONTRACTORS CERTIFICATION MUST BE PRESENTED TO THE DESIGN ENGINEER BEFORE AN AS-BUILT CERTIFICATION CAN BE ISSUED FOR THIS FACILITY.

11. INSTALL RISER / BARREL ASSEMBLY, ALONG WITH THE EMERGENCY DRAIN SYSTEM. INSTALL 36" RCP OUTLET BARREL SPILLWAY FILTER FROM THE DETAILS SHOWN ON SHEET C9.02L.

12. CONSTRUCT EMBANKMENT PER SPECIFICATIONS LISTED IN THE SECTION TITLED "BERM AND SOIL COMPACTION SPECIFICATIONS" AND REQUIREMENTS OF THE ON-SITE GEOTECHNICAL ENGINEER. ALL CHARACTERISTICS OF THE EMBANKMENT FILL MATERIAL SHALL MEET THE STANDARDS SET FORTH IN "BERM AND SOIL COMPACTION SPECIFICATIONS", INCLUDING COMPACTION AND MOISTURE REQUIREMENTS. IF NECESSARY TO ACHIEVE PROPER COMPACTION, THE EMBANKMENT FILL MATERIAL WILL BE OVERBUILT IN HORIZONTAL LIFTS AND CUT BACK TO PROPER FINAL GRADE. ANY HAND COMPACTION ACTIVITIES AROUND SPILLWAY OR DRAIN STRUCTURES SHALL BE CONDUCTED IN 4-INCH LOOSE LIFTS AND BE TO THE SAME COMPACTION AND MOISTURE REQUIREMENTS AS THE ENTIRE EMBANKMENT. ALL COMPACTION AND MOISTURE TESTING SHALL BE CARRIED OUT AS DIRECTED BY THE ON-SITE GEOTECHNICAL ENGINEER AND AS LISTED IN THE SECTION TITLED "BERM AND SOIL COMPACTION SPECIFICATIONS".

13. UPON COMPLETION OF DAM EMBANKMENT, PROMPTLY STABILIZE AND SEED DAM EMBANKMENT PER SEEDING SCHEDULE. PERMANENT GROUND COVER SHALL BE ESTABLISHED PER THE PERMANENT SEEDING SCHEDULE FOUND ON SHEET C9.03H.

14. SCHEDULE A FINAL AS-BUILT INSPECTION AND AS-BUILT SURVEY WITH THE ENGINEER AND SURVEYOR. AN AS-BUILT INSPECTION AND SURVEY SHALL BE SCHEDULED BEFORE IMPOUNDING WATER IN THE FACILITY AND A MINIMUM OF 60 DAYS PRIOR TO THE ANTICIPATED DATE OF CERTIFICATION APPROVAL. ANY COMMENTS OR DEFICIENCIES IN THE SCM CONSTRUCTION MUST BE CORRECTED TO THE SATISFACTION OF THE ENGINEER AND OWNER BEFORE CERTIFICATION SHALL BE GRANTED.

BERM AND SOIL COMPACTION SPECIFICATIONS

1. PRIOR TO CONSTRUCTION, THE ON-SITE GEOTECHNICAL ENGINEER SHALL IDENTIFY BORROW / FILL AREAS AND VERIFY THEIR SUITABILITY FOR USE WITHIN THE DAM EMBANKMENT. ALSO, THE ON-SITE GEOTECHNICAL ENGINEER SHALL PERFORM STANDARD PROCTORS ON THE PROPOSED BORROW MATERIAL TO ENSURE THAT OPTIMUM MOISTURE CONTENT AND COMPACTION CAN BE ACHIEVED / CONTROLLED DURING CONSTRUCTION.

2. ALL FILL MATERIALS TO BE USED FOR THE DAM EMBANKMENT SHALL BE TAKEN FROM BORROW AREAS APPROVED BY THE ON-SITE GEOTECHNICAL ENGINEER. THE FILL MATERIAL SHALL BE FREE FROM ROOTS, STUMPS, WOOD, STONES GREATER THAN 6", AND FROZEN OR OTHER OBJECTIONABLE MATERIAL. THE FOLLOWING SOIL TYPES ARE SUITABLE FOR USE AS FILL WITHIN THE DAM EMBANKMENT AND KEY TRENCH: ML AND CL. ALL FILL MATERIALS SHALL BE APPROVED BY THE ONSITE GEOTECHNICAL ENGINEER FOR THE INTENDED USE.

3. FILL PLACEMENT FOR THE EMBANKMENT SHALL NOT EXCEED A MAXIMUM 8" LIFT (UNCOMPACTED). EACH LIFT SHALL BE CONTINUOUS FOR THE ENTIRE LENGTH OF EMBANKMENT. BEFORE PLACEMENT OF FILL FOR THE BERM SECTION, ALL UNSUITABLE MATERIAL SHALL BE REMOVED AND THE SURFACE PROPERLY PREPARED FOR FILL PLACEMENT. FILL MATERIAL ADJACENT TO ALL SPILLWAY AND DRAINAGE STRUCTURES SHALL BE PLACED IN 4-INCH (UNCOMPACTED) LIFTS AND HAND-COMPACTED TO THE SAME COMPACTION AND MOISTURE REQUIREMENTS AS THE ENTIRE EMBANKMENT.

4. ALL FILL SOILS USED IN THE EMBANKMENT CONSTRUCTION SHALL BE COMPACTED TO AT LEAST 95% OF THE STANDARD PROCTOR MAXIMUM DRY DENSITY (ASTM D-698). THE FILL SOILS SHALL BE COMPACTED AT A MOISTURE CONTENT WITHIN -1 TO +3 PERCENT OF ITS OPTIMUM MOISTURE CONTENT. COMPACTION TESTS SHALL BE PERFORMED BY THE ON-SITE GEOTECHNICAL ENGINEER DURING CONSTRUCTION TO VERIFY THAT THE PROPER COMPACTION LEVEL HAS BEEN REACHED. THE FILL SHOULD BE COMPACTED USING A SHEEPSFOOT TYPE COMPACTOR. IN ORDER TO PREVENT DAMAGE TO THE PIPE, NO COMPACTION EQUIPMENT SHALL CROSS ANY PIPE UNTIL MINIMUM COVER IS ESTABLISHED ALONG THE PIPE.

5. THE DESIGN ENGINEER SHALL BE PROVIDED WITH REPORTS AND CERTIFICATION, BY THE ON-SITE GEOTECHNICAL ENGINEER, THAT THE GEOTECHNICAL ASPECTS OF THE FACILITY HAVE BEEN CONSTRUCTED PER PLAN. THIS CERTIFICATION MUST ADDRESS THE TESTING FOR MATERIALS AND COMPACTION OF THE DAM EMBANKMENT AND SPILLWAY. THESE REPORTS AND CERTIFICATION WILL BE NEEDED DURING THE AS-BUILT CERTIFICATION PROCESS FOR THIS STORMWATER CONTROL MEASURE. THEREFORE, IT SHALL BE THE CONTRACTOR'S RESPONSIBILITY TO COORDINATE TESTING AND OBSERVATION WITH THE ON-SITE GEOTECHNICAL ENGINEER.

6. TESTING OF THE NEW FILL MATERIALS SHALL BE PERFORMED TO VERIFY THAT THE RECOMMENDED LEVEL OF COMPACTION IS ACHIEVED DURING CONSTRUCTION. THEREFORE, ONE DENSITY TEST SHALL BE PERFORMED FOR EVERY 2,500 SQUARE FEET OF AREA FOR EVERY LIFT OF FILL OR AS RECOMMENDED BY THE ON-SITE GEOTECHNICAL ENGINEER.

7. TESTING WILL BE REQUIRED ALONG THE 36"Ø RCP OUTLET BARREL AT A FREQUENCY OF ONE TEST PER 25 LF OF PIPE PER VERTICAL FOOT OF FILL OR AS DIRECTED BY THE ON-SITE GEOTECHNICAL ENGINEER.

STATEMENT OF RESPONSIBILITY

1. ALL REQUIRED MAINTENANCE AND INSPECTIONS OF THE STORMWATER CONTROL MEASURE SHALL BE THE RESPONSIBILITY OF THE OWNER, PER THE EXECUTED OPERATION AND MAINTENANCE AGREEMENT FOR THIS FACILITY.

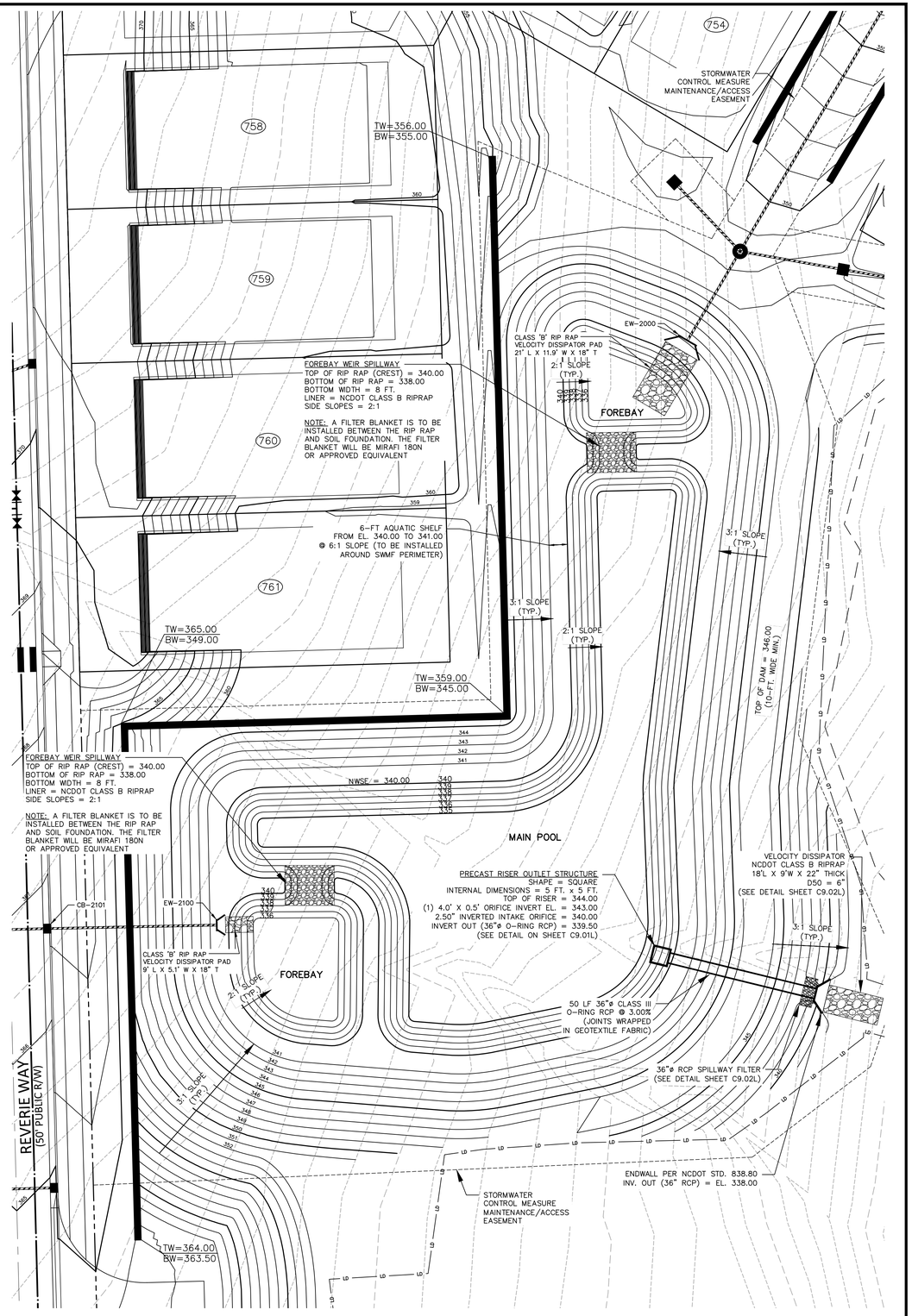

STORMWATER CONTROL MEASURE 'L' PLAN VIEW
1" = 20'

GRAPHIC SCALE
0 10 20 40
1 inch = 20 ft.

FINAL DRAWING - NOT RELEASED FOR CONSTRUCTION

McADAMS
The John R. McAdams Company, Inc.
2905 Meridian Parkway
Durham, NC 27713

phone 919. 361. 5000
fax 919. 361. 2269
license number: C-0293, C-187

www.mcadamsco.com

CLIENT

ASHTON RALEIGH RESIDENTIAL, LLC.
900 RIDGEFIELD DRIVE, SUITE 335
RALEIGH, NORTH CAROLINA 27609
PHONE: 919. 422. 7663
CONTACT: BOB MISHLER

ASHTON WOODS

THE POINT
PHASES 8 AND 14
CONSTRUCTION DRAWINGS - PACKAGE 3
EAST YOUNG STREET
TOWN OF ROLESVILLE, WAKE FOREST TOWNSHIP, WAKE COUNTY, NORTH CAROLINA

CD XX-XX

NORTH CAROLINA PROFESSIONAL ENGINEER SEAL 043300 DANIEL C. WIEBKE — NOT FOR CONSTRUCTION

REVISIONS

NO. DATE

PLAN INFORMATION

PROJECT NO.	AWH-20000
FILENAME	AWH20000 - SCM L
CHECKED BY	DCW
DRAWN BY	TKD
SCALE	AS SHOWN
DATE	12. 13. 2023

SHEET

STORMWATER CONTROL MEASURE 'L' DETAILS

C9.00L

M:\Projects\AWH\AWH-20000\04-Production\Water Resources\South Site\Current Drawings\SCM CDs\AWH-20000 - SCM L.dwg, 12/13/2023 12:01:55 PM, Tommy Daboll

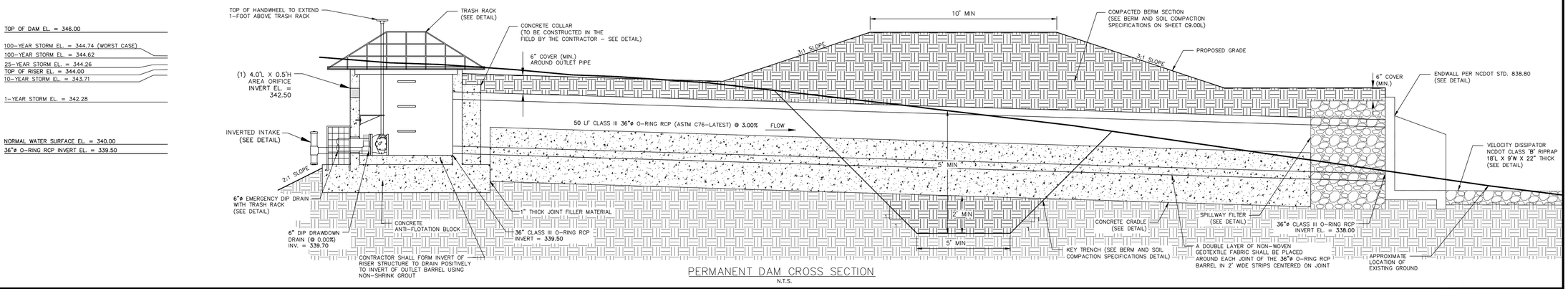

PERMANENT DAM CROSS SECTION
N.T.S.

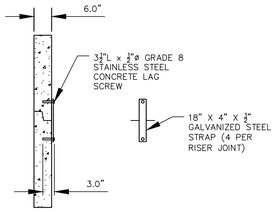

RISER JOINT CONNECTION DETAIL
N.T.S.

NOTES:

1. CONCRETE ANTI-FLOTATION BLOCK TO BE PROVIDED WITH MINIMUM TEMPERATURE AND SHRINKAGE STEEL REINFORCEMENT.

2. TRASH RACKS NOT SHOWN FOR CLARITY.

3. THE NUMBER OF GUIDES FOR THE VALVE STEM SHALL BE DETERMINED IN THE FIELD BY THE CONTRACTOR. THE VALVE STEM MUST BE OPERABLE FROM THE TOP OF THE RISER VIA THE HANDWHEEL WITH AN INSIGNIFICANT AMOUNT OF PLAY IN THE VALVE STEM.

4. CONTRACTOR SHALL PROVIDE A JOINT IN THE OUTLET BARREL NO MORE THAN 5-FT FROM THE RISER.

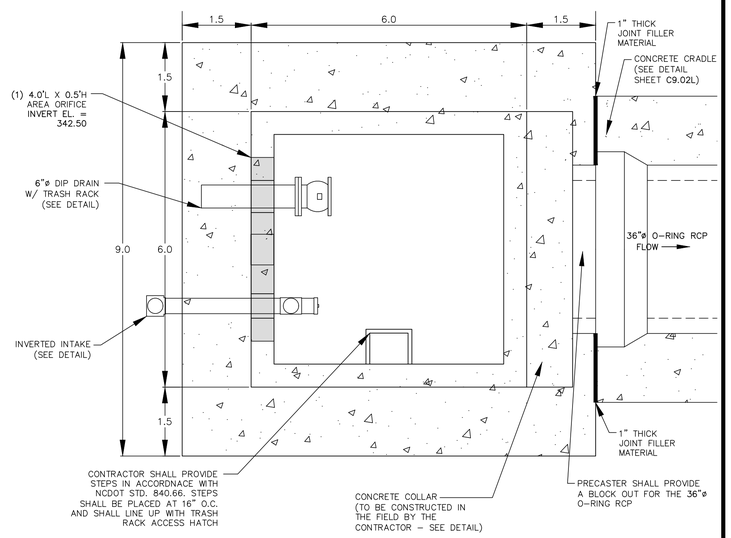

NOTES:
1. ALL REBAR TO BE #4 REBAR.
2. ALL REBAR AND ANGLES TO BE HOT-DIPPED GALVANIZED AND BE PROVIDED WITH AN EPOXY COATING.
3. THE HOT-DIPPED, GALVANIZED 2"x2"x1/4" ANGLES SHALL BE WELDED TO THE REBAR TRASH RACK. ONCE WELDED, THE ENTIRE ASSEMBLY SHALL BE PLACED ONTO THE RISER WITH ANGLES SITTING DIRECTLY ON TOP OF RISER.
4. TRASH RACK IS TO BE SECURELY FASTENED TO THE SPILLWAY RISER WITH A MINIMUM OF FOUR CORROSION-RESISTANT ANCHORS.
5. ACCESS HATCH SHALL ALIGN WITH STEPS IN RISER.

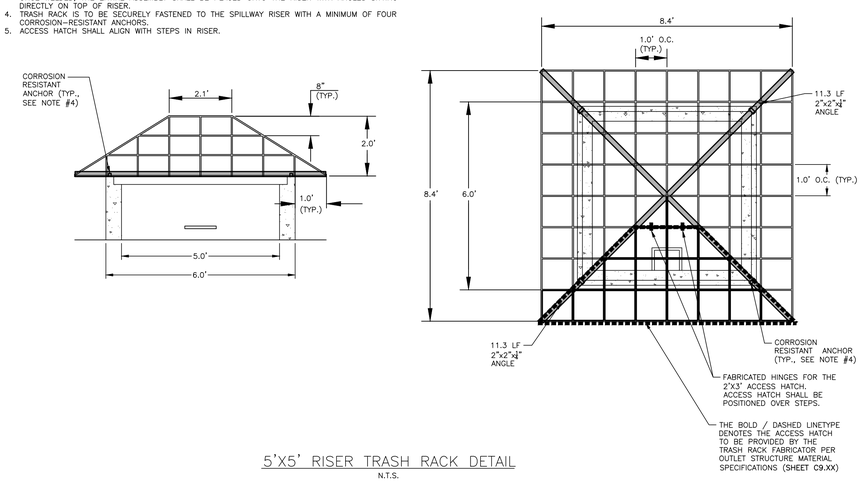

5'X5' RISER TRASH RACK DETAIL
N.T.S.

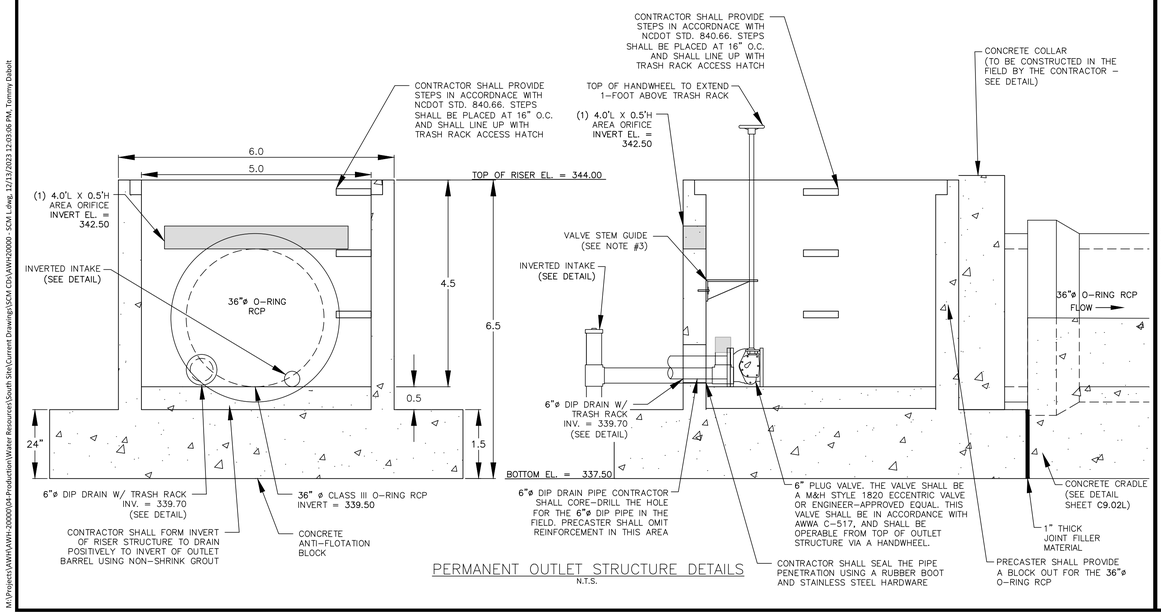

PERMANENT OUTLET STRUCTURE DETAILS
N.T.S.

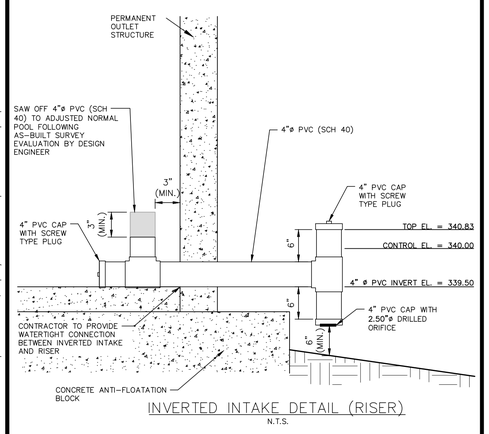

INVERTED INTAKE DETAIL (RISER)
N.T.S.

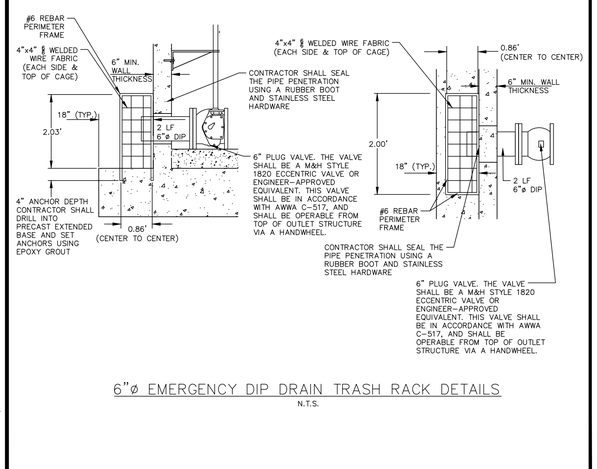

6"ø EMERGENCY DIP DRAIN TRASH RACK DETAILS
N.T.S.

McADAMS
The John R. McAdams Company, Inc.
2905 Meridian Parkway
Durham, NC 27713

phone 919. 361. 5000
fax 919. 361. 2269
license number: C-0293, C-187

www.mcadamsco.com

CLIENT

ASHTON RALEIGH RESIDENTIAL, LLC.
900 RIDGEFIELD DRIVE, SUITE 335
RALEIGH, NORTH CAROLINA 27609
PHONE: 919. 422. 7663
CONTACT: BOB MISHLER

ASHTON WOODS

THE POINT
PHASES 8 AND 14
CONSTRUCTION DRAWINGS - PACKAGE 3
EAST YOUNG STREET
TOWN OF ROLESVILLE, WAKE FOREST TOWNSHIP, WAKE COUNTY, NORTH CAROLINA

CD XX-XX

NORTH CAROLINA PROFESSIONAL ENGINEER SEAL 043300 DANIEL C. WIEBKE — NOT RELEASED FOR CONSTRUCTION

REVISIONS

NO.	DATE

PLAN INFORMATION

PROJECT NO.	AWH-20000
FILENAME	AWH20000 - SCM L
CHECKED BY	DCW
DRAWN BY	TKD
SCALE	AS SHOWN
DATE	12. 13. 2023

SHEET

STORMWATER CONTROL MEASURE 'L' DETAILS

C9.01L

FINAL DRAWING - NOT RELEASED FOR CONSTRUCTION

M:\Projects\AWH\AWH-20000\04-Production\Water Resources\South Site\Current Drawings\SCM CDs\AWH20000 - SCM L.dwg, 12/13/2023 12:03:06 PM, Tommy Dabolt

NOTES:

1. A FILTER BLANKET IS TO BE INSTALLED BETWEEN THE RIPRAP AND SOIL FOUNDATION. THE FILTER BLANKET WILL CONSIST OF A MINIMUM 4" THICK LAYER OF STONE (NCDOT #57) UNDERLAIN WITH MIRAFI FILTER WEAVE 700 OR ENGINEER-APPROVED EQUIVALENT.
2. RIPRAP TO EXTEND TO TOP OF CHANNEL WITH 2:1 SIDE SLOPES THROUGHOUT THE EXTENT OF CHANNEL.

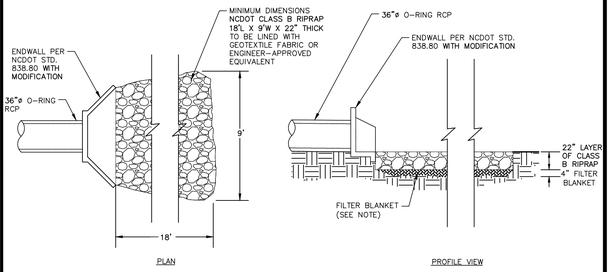

OUTLET BARREL VELOCITY DISSIPATER

N.T.S.

NOTES:

1. ALL REBAR TO BE #4 REBAR.
2. WRAP OUTSIDE OF PIPE WITH VOLCLAY WATERSTOP-RX® 101 (OR PRE-APPROVED EQUIVALENT) AT THE FACE OF THE PRECAST STRUCTURE WALL. PROVIDE 6" OVER LAP ON THE BOTTOM OF THE PIPE.

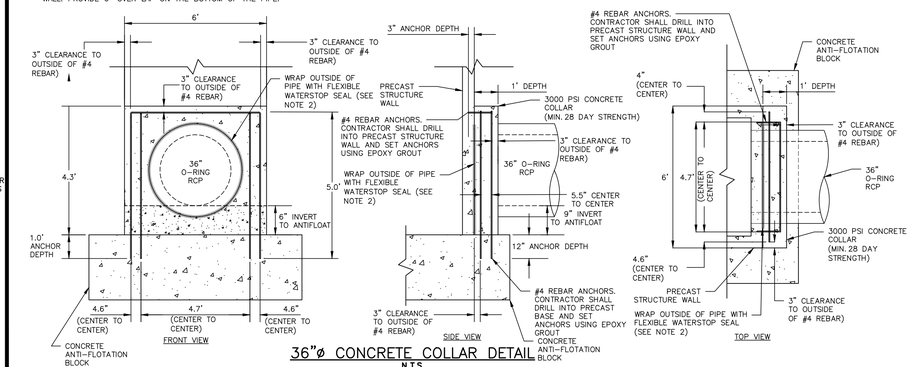

36"ø CONCRETE COLLAR DETAIL

N.T.S.

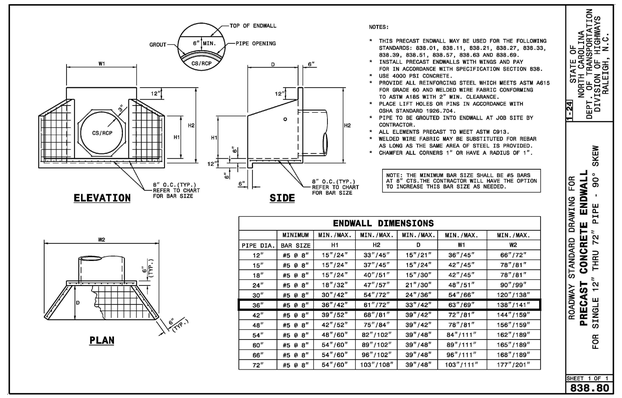

NOTES:

- THIS PRECAST ENDWALL MAY BE USED FOR THE FOLLOWING STANDARDS: 838.01, 838.11, 838.21, 838.27, 838.33, 838.39, 838.51, 838.57, 838.69 AND 838.69.
- INSTALL PRECAST ENDWALLS WITH WINGS AND PAY FOR IN ACCORDANCE WITH SPECIFICATION SECTION 838.
- USE 4000 PSI CONCRETE.
- PROVIDE ALL REINFORCING STEEL WHICH MEETS ASTM A615 FOR GRADE 60 AND WELDED WIRE FABRIC CONFORMING TO ASTM A185 WITH 3" MIN. CLEARANCE.
- PLACE LIFT HOLES OR PINS IN ACCORDANCE WITH OSHA STANDARD 1926.704.
- PIPE TO BE GROUTED INTO ENDWALL AT JOB SITE BY CONTRACTOR.
- ALL ELEMENTS PRECAST TO MEET ASTM C913.
- WELDED WIRE FABRIC MAY BE SUBSTITUTED FOR REBAR AS LONG AS THE SAME AREA OF STEEL IS PROVIDED.
- CHAMFER ALL CORNERS 1" OR HAVE A RADIUS OF 1".

NOTE: THE MINIMUM BAR SIZE SHALL BE #5 BARS AT 8" CTS.THE CONTRACTOR WILL HAVE THE OPTION TO INCREASE THIS BAR SIZE AS NEEDED.

ENDWALL DIMENSIONS

PIPE DIA.	MINIMUM BAR SIZE	MIN./MAX. H1	MIN./MAX. H2	MIN./MAX. D	MIN./MAX. W1	MIN./MAX. W2
12"	#5 @ 8"	15"/24"	33"/45"	15"/21"	36"/45"	66"/72"
15"	#5 @ 8"	15"/24"	37"/45"	15"/24"	42"/45"	78"/81"
18"	#5 @ 8"	15"/24"	40"/51"	15"/30"	42"/45"	78"/81"
24"	#5 @ 8"	18"/32"	47"/57"	21"/30"	48"/51"	90"/99"
30"	#5 @ 8"	30"/42"	54"/72"	24"/36"	54"/66"	120"/138"
36"	#5 @ 8"	36"/42"	61"/72"	33"/42"	63"/69"	138"/141"
42"	#5 @ 8"	39"/52"	68"/81"	39"/42"	72"/81"	144"/159"
48"	#5 @ 8"	42"/52"	75"/84"	39"/42"	78"/81"	156"/159"
54"	#5 @ 8"	48"/60"	82"/102"	39"/48"	84"/111"	162"/189"
60"	#5 @ 8"	54"/60"	89"/102"	39"/48"	89"/111"	165"/189"
66"	#5 @ 8"	54"/60"	96"/102"	39"/48"	96"/111"	168"/189"
72"	#5 @ 8"	54"/60"	103"/108"	39"/48"	103"/111"	177"/201"

STATE OF NORTH CAROLINA DEPARTMENT OF TRANSPORTATION DIVISION OF HIGHWAYS RALEIGH, N.C.

1-26| ROADWAY STANDARD DRAWING FOR **PRECAST CONCRETE ENDWALL** FOR SINGLE 12" THRU 72" PIPE - 90° SKEW

SHEET 1 OF 1

838.80

NOTE:

1. HAVILAND DRAINAGE PRODUCTS 4" ALUMINUM ANIMAL GUARD ITEM NUMBER AGSS04 (OR ENGINEER APPROVED EQUIVALENT) TO BE INSTALLED AT OUTLET OF 4" HDPE PIPES

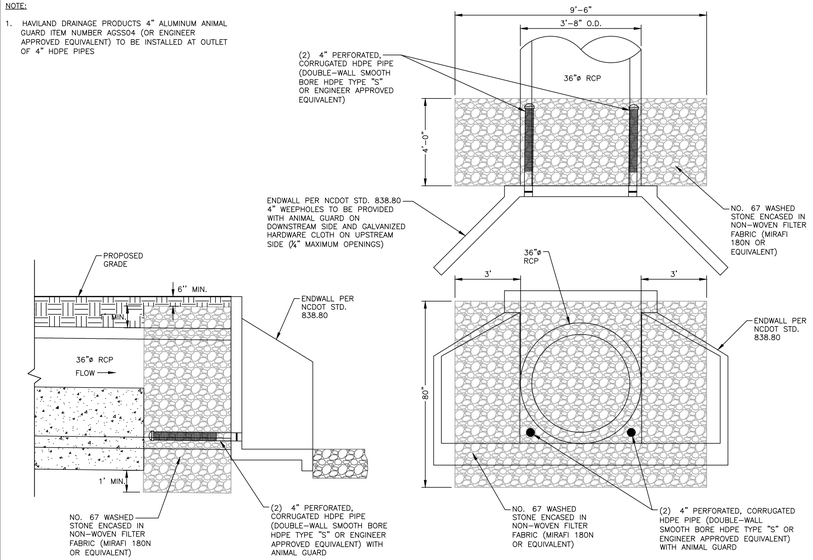

36" SPILLWAY FILTER DETAIL

N.T.S.

NOTES:
INSTALL ALL STEPS PROTRUDING 4" FROM INSIDE FACE OF STRUCTURE WALL.
STEPS DIFFERING IN DIMENSIONS, CONFIGURATION, OR MATERIALS FROM THOSE SHOWN MAY ALSO BE USED PROVIDED THE CONTRACTOR HAS FURNISHED THE ENGINEER WITH DETAILS OF THE PROPOSED STEPS AND HAS RECEIVED WRITTEN APPROVAL FROM THE ENGINEER FOR THE USE OF SUCH STEPS.

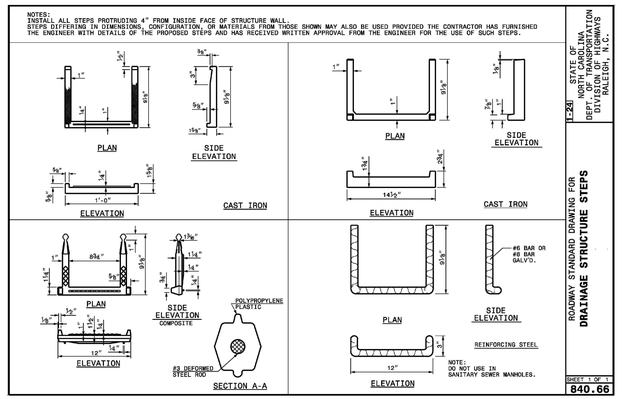

STATE OF NORTH CAROLINA DEPARTMENT OF TRANSPORTATION DIVISION OF HIGHWAYS RALEIGH, N.C.

1-26| ROADWAY STANDARD DRAWING FOR **DRAINAGE STRUCTURE STEPS**

SHEET 1 OF 1

840.66

NOTE:

1. CONTRACTOR SHALL PROVIDE A JOINT IN THE OUTLET BARREL NO MORE THAN 5-FT FROM THE RISER.

BARREL PIPE CONCRETE CRADLE CONSTRUCTION SEQUENCE

1. IF OPTION A IS CHOSEN FROM NOTE 9 OF THE OUTLET STRUCTURE MATERIAL SPECIFICATIONS, THEN BRING GRADE OF DAM EMBANKMENT TO SPRINGLINE OF PIPE ELEVATION. IF OPTION B IS CHOSEN FROM NOTE 9 OF THE OUTLET STRUCTURE MATERIAL SPECIFICATIONS, THEN CONSTRUCT FORMWORK FOR CONCRETE CRADLE ON EXISTING GRADE.
2. IF OPTION A IS CHOSEN FROM NOTE 9 OF THE OUTLET STRUCTURE MATERIAL SPECIFICATIONS, THEN EXCAVATE TRENCH FOR CRADLE AND BARREL PER DIMENSIONS ON DRAWINGS. IF OPTION B IS CHOSEN FROM NOTE 9 OF THE OUTLET STRUCTURE MATERIAL SPECIFICATIONS, PROCEED TO STEP 3 BELOW.
3. PLACE BARREL PIPE ON CONCRETE BLOCKS TO GRADE. AT THIS STEP, CONTRACTOR SHALL WRAP A DOUBLE LAYER OF NON-WOVEN GEOTEXTILE FABRIC AROUND EACH JOINT OF THE 36"ø O-RING RCP BARREL IN 2' WIDE STRIPS CENTERED ON JOINT.
4. PLACE CONCRETE FOR CRADLE FOR EACH SECTION FROM ONE SIDE OF THE TRENCH. ALLOW CONCRETE TO FILL ENTIRE AREA UNDER PIPE AND PIPE HAUNCHES AS TO LEAVE NO VOIDS UNDER THE PIPE BEFORE PLACING CONCRETE ON THE OPPOSITE SIDE OF THE TRENCH. PLACE ENTIRE CRADLE AS ONE LIFT (VERTICALLY) PER DRAWINGS.
5. ALLOW CRADLE TO CURE FOR A MINIMUM OF 7 DAYS BEFORE ANY VIBRATING COMPACTION EQUIPMENT IS USED IN THE VICINITY OF THE BARREL PIPE.
6. TRENCH TO BE BACKFILLED IN 5" LIFTS WHEN COMPACTION IS BY HAND. BACKFILL IS IN 8" LIFTS WHEN CONDUCTED BY MACHINE. MINIMUM OF 2 FEET COVER MUST BE PRESENT ON 36"ø RCP BEFORE DRIVING OVER WITH HEAVY EQUIPMENT.

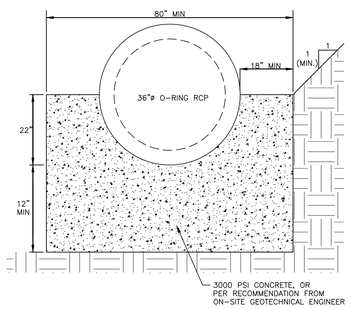

36" CONCRETE CRADLE DETAIL

N.T.S.

NOTES:

1. ALL REINFORCING STEEL IN RISER ANTI-FLOTATION BLOCK TO BE GRADE 60 #6 BARS FOR HORIZONTAL CROSSING AND GRADE 60 #4 BARS FOR VERTICAL CONNECTIONS.
2. INSIDE OF RISER BOTTOM TO BE FORMED WITH NON-SHRINK GROUT TO INVERT ELEVATION OF BARREL.
3. ALL PIPE PENETRATIONS THROUGH THE CONCRETE RISER STRUCTURE SHALL BE MADE WATERTIGHT.

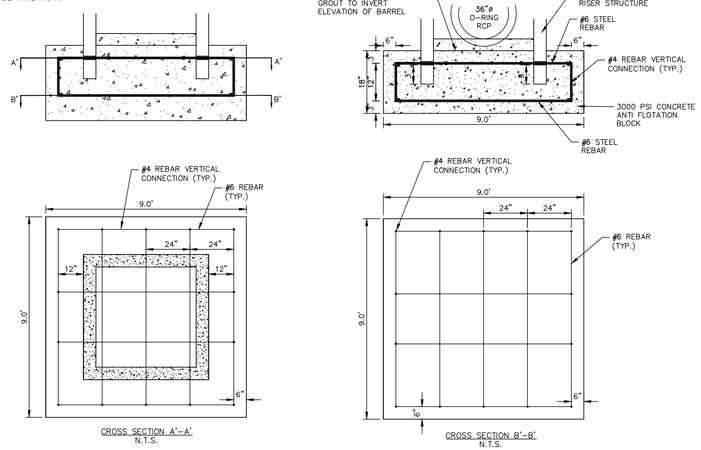

RISER/ANTI-FLOTATION BLOCK CONNECTION

N.T.S.

FINAL DRAWING - NOT RELEASED FOR CONSTRUCTION

M:\Projects\AWH\AWH-20000\04-Production\Water Resources\South Site\Current Drawings\SCM Cls\AWH-20000 - SCM L.dwg, 12/13/2023 12:03:14 PM, Tommy Daboll

McADAMS
The John R. McAdams Company, Inc.
2905 Meridian Parkway
Durham, NC 27713

phone 919. 361. 5000
fax 919. 361. 2269
license number: C-0293, C-187

www.mcadamsco.com

CLIENT

ASHTON RALEIGH RESIDENTIAL, LLC.
900 RIDGEFIELD DRIVE, SUITE 335
RALEIGH, NORTH CAROLINA 27609
PHONE: 919. 422. 7663
CONTACT: BOB MISHLER

ASHTON WOODS

THE POINT
PHASES 8 AND 14
CONSTRUCTION DRAWINGS - PACKAGE 3
EAST YOUNG STREET
TOWN OF ROLESVILLE, WAKE FOREST TOWNSHIP, WAKE COUNTY, NORTH CAROLINA

CD XX-XX

NORTH CAROLINA PROFESSIONAL ENGINEER SEAL 043300 DANIEL C. WIEBE

REVISIONS

NO.	DATE

PLAN INFORMATION

PROJECT NO.	AWH-20000
FILENAME	AWH20000 - SCM L
CHECKED BY	DCW
DRAWN BY	TKD
SCALE	AS SHOWN
DATE	12. 13. 2023

SHEET

STORMWATER CONTROL MEASURE 'L' DETAILS

C9.02L

STORMWATER CONTROL MEASURE 'L' LANDSCAPE SPECIFICATIONS

LEGEND

QTY.	SYM.	SCIENTIFIC NAME	COMMON NAME	HATCH	TYPE	SPACING
SHALLOW WATER						
228	IV	IRIS VIRGINIANA	BLUE FLAG IRIS		4-INCH CONTAINER	24" O.C.
188	PC	PONTEDERIA CORDATA	PICKEREL WEED		4-INCH CONTAINER	24" O.C.
296	ST	SCHOENOPLECTUS TABERNAEMONTANI	SOFT-STEM BULRUSH		4-INCH CONTAINER	24" O.C.
SHALLOW LAND						
209	CS	CAREX SPP.	SEDGES		4-INCH CONTAINER	24" O.C.
174	CA	CRINUM AMERICANUM	AMERICAN CRINUM LILY		4-INCH CONTAINER	24" O.C.
145	HA	HIBISCUS ACULEATUS	PINELANDS MALLOW		4-INCH CONTAINER	24" O.C.

SEEDBED PREPARATION

1. CHISEL COMPACTED AREAS AND SPREAD TOPSOIL 3-4 INCHES DEEP OVER ADVERSE SOIL CONDITIONS. TOPSOIL SHOULD BE INCORPORATED INTO THE FINAL GRADING OF THE BASIN SIDE SLOPES AND AQUATIC SHELF. CONTRACTOR SHOULD SCARIFY THE TOP 3-4 INCHES OF THE COMPACTED FILL TO PROMOTE BONDING WITH TOPSOIL.
2. RIP THE ENTIRE AREA TO 6 INCHES DEPTH.
3. REMOVE ALL LOOSE ROCK, ROOTS, AND OTHER OBSTRUCTIONS LEAVING SURFACE REASONABLY SMOOTH AND UNIFORM.
4. PER ONE TIME ONLY, APPLY AGRICULTURAL LIME, FERTILIZER, AND SUPERPHOSPHATE UNIFORMLY AND MIX WITH SOIL.
5. CONTINUE TILLAGE UNTIL A WELL-PULVERIZED, FIRM REASONABLY UNIFORM SEEDBED IS PREPARED 4 TO 6 INCHES DEEP.
6. SEED ON A FRESHLY PREPARED SEEDBED AND COVER.
7. MULCH IMMEDIATELY AFTER SEEDING AND ANCHOR MULCH.
8. INSPECT ALL SEEDED AREAS AND MAKE NECESSARY REPAIRS OR RESEEDINGS WITHIN THE PLANTING SEASON, IF POSSIBLE. AFTER PERMANENT COVER IS ESTABLISHED.
9. CONSULT CONSERVATION INSPECTOR ON MAINTENANCE TREATMENT.

TEMPORARY SEEDING SCHEDULE

SEEDING DATE	SEEDING MIXTURE	APPLICATION RATE
JAN 1 - MAY 1	RYE (GRAIN)	120 LBS/AC
	KOBE LESPEDEZA	50 LBS/AC
MAY 1 - AUG 15	GERMAN MILLET	40 LBS/AC
AUG 15 - DEC 30	RYE (GRAIN)	120 LBS/AC

SOIL AMENDMENTS
FOLLOW RECOMMENDATIONS OF SOIL TESTS OR APPLY 2,000 LB/AC GROUND AGRICULTURE LIMESTONE AND 750 LB/AC 10-10-10 FERTILIZER (FROM AUG 15 - DEC 30, INCREASE 10-10-10 FERTILIZER TO 1000 LB/AC).

MULCH
APPLY 4000 LB/AC STRAW. ANCHOR STRAW BY TACKING WITH ASPHALT, NETTING, OR A MULCH ANCHORING TOOL. A DISK WITH BLADES SET NEARLY STRAIGHT CAN BE USED AS A MULCH ANCHORING TOOL.

MAINTENANCE
JAN 1 - AUG 15: REFERTILIZE IF GROWTH IS NOT FULLY ADEQUATE. RESEED, REFERTILIZE, AND MULCH IMMEDIATELY FOLLOWING EROSION OR OTHER DAMAGE.

AUG 15 - DEC 30: REPAIR AND REFERTILIZE DAMAGED AREAS IMMEDIATELY. TOP DRESS WITH 50 LB/AC OF NITROGEN IN MARCH. IF IT IS NECESSARY TO EXTEND TEMPORARY COVER BEYOND JUNE 15, OVERSEED WITH 50 LB/AC KOBE LESPEDEZA IN LATE FEBRUARY OR EARLY MARCH.

NOTE: USE THE TEMPORARY SEEDING SCHEDULE ONLY WHEN DATE IS NOT CORRECT TO USE THE PERMANENT SEEDING SCHEDULE.

PERMANENT SEEDING SCHEDULE (DAM EMBANKMENTS)

SEEDING DATE	SEEDING MIXTURE OPTIONS (CHOOSE ONE)	APPLICATION RATE
MAY 1 - AUG 31	CENTIPEDE RAW	30 LBS/AC
APRIL 1 - SEPT 1	SUMMER MIX (80% HULLED BERMUDA/20% MILLET)	200 LBS/AC
OCT 1 - MARCH 1	FALL MIX (80% TALL FESCUE/20% ANNUAL RYEGRASS)	200 LBS/AC

SOIL AMENDMENTS
FOLLOW RECOMMENDATIONS OF SOIL TESTS OR APPLY 4,000 LB/AC GROUND AGRICULTURE LIMESTONE AND 1000 LB/AC 10-10-10 FERTILIZER.

MULCH
APPLY 4000 LB/AC STRAW. ANCHOR STRAW BY TACKING WITH ASPHALT, NETTING, OR A MULCH ANCHORING TOOL. A DISK WITH BLADES SET NEARLY STRAIGHT CAN BE USED AS A MULCH ANCHORING TOOL.

MAINTENANCE
INSPECT AND REPAIR MULCH FREQUENTLY. REFERTILIZE IN LATE WINTER OF THE FOLLOWING YEAR; USE SOIL TESTS OR APPLY 150 LB/AC 10-10-10 FERTILIZER. MOW REGULARLY TO A HEIGHT OF 2-4 INCHES.

NOTE: PERMANENT SEEDING SCHEDULE IS FOR SLOPES OF THE BASIN AND TOP OF BERM.

PLANTING INSTRUCTIONS

PLANTING TECHNIQUES
A. ENSURE THAT ROOTS, ONCE REMOVED FROM POT, ARE STRAIGHTENED AND FACE DOWNWARD.
B. CREATE PLANTING AREA FOR EACH PLANT AND EXCAVATE PIT.
C. PLACE PLANTS IN PIT ENSURING ROOTS ARE FACING COMPLETELY DOWNWARD.
D. HEEL IN SOIL AROUND PLANT AND PROCEED TO NEXT PLANTING LOCATION.
E. NEWLY PLANTED PLANTS NEED TO BE FASTENED TO THE SUBSTRATE FOR THE ESTABLISHMENT OF NEW ROOTS.
F. ROOTS SHALL BE SPREAD IN THEIR NORMAL POSITION. ALL BROKEN OR FRAYED ROOTS SHALL BE CUT OFF CLEANLY.
G. THE DIAMETER OF THE PITS FOR ALL VEGETATIVE STOCK SHALL BE AT LEAST THREE TIMES THE DIAMETER OF THE ROOT MASS. PLANT PIT WALL SHALL BE SCARIFIED PRIOR TO PLANT INSTALLATION.
H. SET THE PLANTS UPRIGHT, IN THE CENTER OF THE PIT. THE BOTTOM OF THE ROOT MASS SHOULD BE RESTING ON UNDISTURBED SOIL.
I. PLACE THE BACKFILL AROUND THE BASE AND SIDES OF THE ROOT MASS, AND WORK EACH LAYER TO SETTLE BACKFILL AND TO ELIMINATE VOIDS AND AIR POCKETS. WHEN PIT IS APPROXIMATELY 2/3 FULL, WATER THOROUGHLY BEFORE PLACING REMAINDER OF THE BACKFILL. WATER AGAIN AFTER PLACING FINAL LAYER OF BACKFILL.
J. BROKEN OR DAMAGED PARTS WILL BE CUT BACK TO UNDAMAGED TISSUE, LEAVING AS MUCH GREEN BASAL TISSUE AS POSSIBLE ABOVE THE ROOTS. IF MORE THAN FIFTY PERCENT (50%) OF THE PLANT IS DAMAGED THEN CONTRACTOR SHALL REPLACE THE PLANT.

CONTAINER STOCK / BARE ROOT
A. STOCK SHALL HAVE BEEN GROWN IN A CONTAINER LONG ENOUGH FOR THE ROOT SYSTEM TO HAVE DEVELOPED SUFFICIENTLY TO HOLD ITS SOIL TOGETHER ONCE REMOVED FROM THE CONTAINER.
B. CONTAINER PLANTS WILL NEED TO BE WATERED REGULARLY AND PLACED IN SHADY CONDITIONS UNTIL PLANTING OCCURS.
C. BARE ROOT PLANTS ARE FOR IMMEDIATE PLANTING, OTHERWISE SEE D) BELOW.
D. IF BARE ROOTS SPECIMENS ARE NOT TO BE PLANTED WITHIN FOUR (4) DAYS, TEMPORARY HOLDING OF BARE ROOT SPECIMENS ARE TO BE COVERED ENTIRELY BY A SUITABLE MEDIUM (ETC. SOIL, SAWDUST, MULCH OR THE LIKE) AND WATERED REGULARLY SO AS TO NOT DRY OUT.

PLANT LOCATIONS
A. NEW PLANTINGS SHALL BE LOCATED WHERE SHOWN ON PLAN EXCEPT WHERE CHANGES HAVE BEEN MADE IN PROPOSED CONSTRUCTION.
B. NECESSARY ADJUSTMENTS SHALL BE MADE ONLY AFTER APPROVAL BY THE OWNER OR THE OWNER'S REPRESENTATIVE.

WATER
WATER SHALL BE POTABLE AND SHALL NOT CONTAIN ELEMENTS TOXIC TO PLANT LIFE.

PLANTING SCHEDULE

1. ONCE THE GRADING IS COMPLETE, THE CONTRACTOR SHALL REQUEST AN ON-SITE INSPECTION AND AN AS-BUILT SURVEY PRIOR TO INSTALLATION OF THE STORMWATER MANAGEMENT FACILITY PLANTS. IF THE CONTRACTOR PLANTS THE PROPOSED VEGETATION PRIOR TO AN AS-BUILT SURVEY (AND SUBSEQUENT APPROVAL), ANY CHANGES TO THE GRADING / RE-PLANTING OF PLANTS WILL BE AT THE CONTRACTOR'S EXPENSE.
2. ONCE THE ENGINEER HAS APPROVED THE AS-BUILT GRADING, THE CONTRACTOR SHALL PLANT THE PROPOSED STORMWATER MANAGEMENT FACILITY PLANTS SHOWN ON THE LANDSCAPE PLAN FOR THE FACILITY. AFTER COMPLETION OF THE PLANTING, THE LANDSCAPE CONTRACTOR SHALL PROVIDE A LETTER TO THE ENGINEER CERTIFYING THAT THE PLANTS HAVE BEEN INSTALLED PER THE APPROVED STORMWATER MANAGEMENT FACILITY PLANTING PLAN.
3. OPTIMAL PLANTING PERIODS RANGE APPROXIMATELY FROM APRIL 15TH THRU JUNE 30TH AND SEPTEMBER 1ST THRU OCTOBER 31ST. FOR FINAL DETERMINATION OF THE SITE'S PLANTING PERIOD, THE CONTRACTOR SHALL COORDINATE WITH A LANDSCAPE PROFESSIONAL REGARDING SCHEDULING FOR PLANT INSTALLATION.
4. IT IS RECOMMENDED THAT THE CONTRACTOR TAKE MEASURES TO PREVENT WILDLIFE FROM DAMAGING OR CONSUMING WETLAND PLANTINGS.

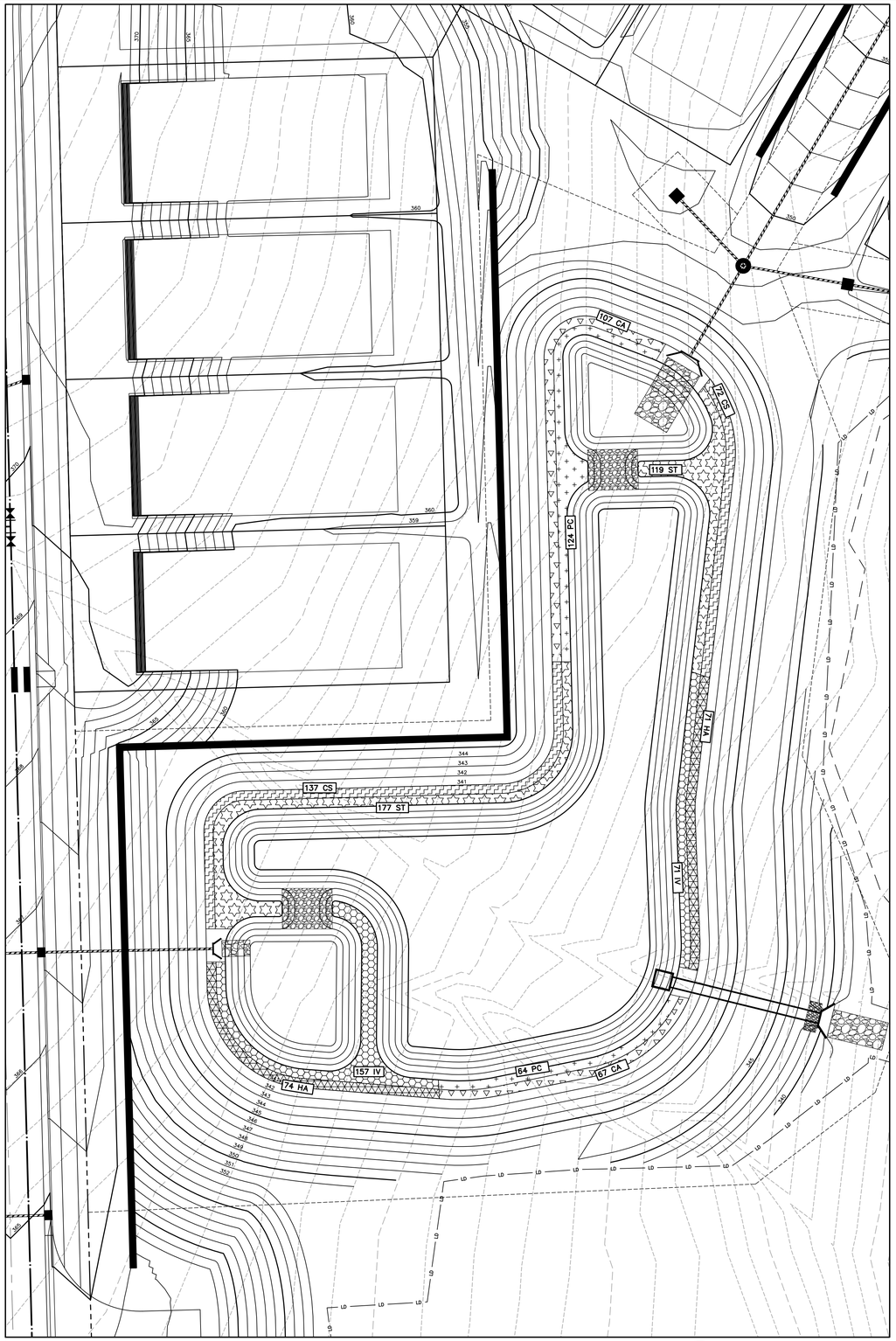

STORMWATER CONTROL MEASURE 'L' LANDSCAPE PLAN
1" = 20'

GRAPHIC SCALE
0 10 20 40
1 inch = 20 ft.

FINAL DRAWING - NOT RELEASED FOR CONSTRUCTION

M:\Projects\AWH\AWH-20000\04-Production\Water Resources\South Site\Current Drawings\SCM\ Cds\AWH20000 - SCM L.dwg, 12/13/2023 12:04:03 PM, Tommy Diabolt

McADAMS
The John R. McAdams Company, Inc.
2905 Meridian Parkway
Durham, NC 27713

phone 919. 361. 5000
fax 919. 361. 2269
license number: C-0293, C-187

www.mcadamsco.com

CLIENT

ASHTON RALEIGH RESIDENTIAL, LLC.
900 RIDGEFIELD DRIVE, SUITE 335
RALEIGH, NORTH CAROLINA 27609
PHONE: 919. 422. 7663
CONTACT: BOB MISHLER

ASHTON WOODS

THE POINT
PHASES 8 AND 14
CONSTRUCTION DRAWINGS - PACKAGE 3
EAST YOUNG STREET
TOWN OF ROLESVILLE, WAKE FOREST TOWNSHIP, WAKE COUNTY, NORTH CAROLINA

CD XX-XX

NORTH CAROLINA PROFESSIONAL SEAL 043300 ENGINEER DANIEL C. WIEBKE — NOT FOR CONSTRUCTION

REVISIONS

NO. DATE

PLAN INFORMATION

PROJECT NO.	AWH-20000
FILENAME	AWH20000 - SCM L
CHECKED BY	DCW
DRAWN BY	TKD
SCALE	1"=20'
DATE	12. 13. 2023

SHEET

STORMWATER CONTROL MEASURE 'L' LANDSCAPE PLANS

C9.03L

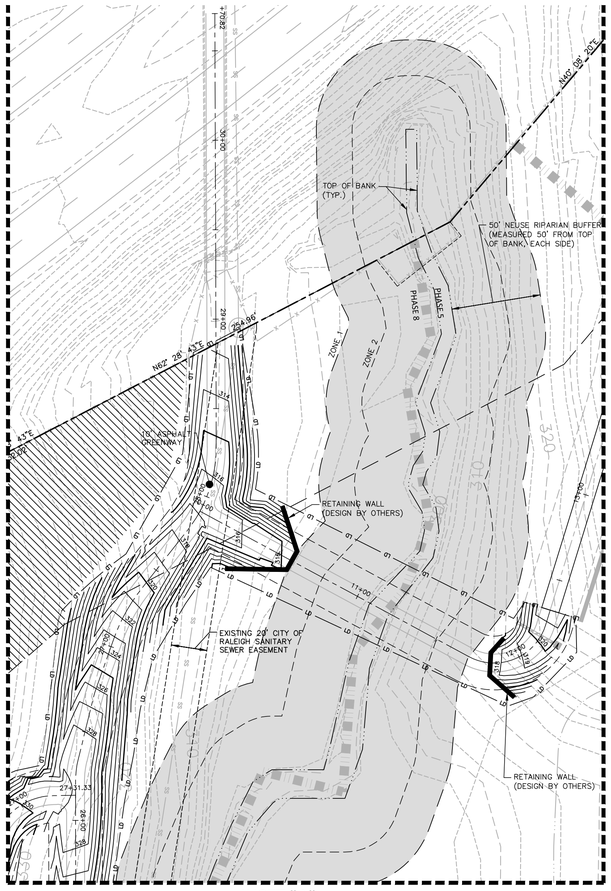

INSET "A"

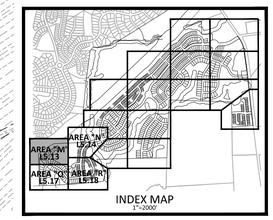

INDEX MAP
1"=2000'

30" VALLEY GUTTER WILL BE USED IN FRONT OF ALL FRONT LOADED SINGLE FAMILY LOTS AND TOWNHOME LOTS.

DE STORM DRAINAGE EASEMENT

EXISTING LOUISBURG ROAD (HWY 401) (VARIABLE WIDTH PUBLIC R/W)

OWNER: NC DEPARTMENT OF TRANSPORTATION
PIN: 1758930801
REID: 0362134
D.B.: 013667, PG. 00509
ACREAGE: 3.96
ZONING: R&PUD
(ASHTON WOODS ACQUIRING PARCEL FROM NCDOT)

30' TOWN OF ROLESVILLE PUBLIC GREENWAY EASEMENT

N87° 33' 48"E 469.05'

10' ASPHALT GREENWAY

EXISTING RIGHT-OF-WAY

N60° 44' 29"E 304.37'

100' TYPE B LANDSCAPE BUFFER

RETAINING WALL (DESIGN BY OTHERS)

10' ASPHALT GREENWAY

S46° 45' 51"E 219.22'

30' TOWN OF ROLESVILLE PUBLIC GREENWAY EASEMENT

OS-5

MARROW COURT (50' PUBLIC R/W)

OS-5

EXISTING RIGHT-OF-WAY

100' TYPE B LANDSCAPE BUFFER

RETAINING WALL (DESIGN BY OTHERS)

RETAINING WALL (DESIGN BY OTHERS)

OWNER: QUAD TRI LLC OLIVE, MARTHA
PIN: 1758726794
REID: 0052027
D.B.: 016161, PG. 01089
ACREAGE: 12.84
ZONING: R-1

RETAINING WALL (DESIGN BY OTHERS)

OS-5

REVERIE WAY (50' PUBLIC R/W)

12"x12" TEE (S) 12" GV&B

SEE SHEET C4.17

SEE SHEET L5.14

SITE LEGEND

- ACCESSIBLE RAMPS (TYPE A, TYPE B, TYPE C)
- DE STORM DRAINAGE EASEMENT
- PHASE LINE
- PROPERTY LINE
- RIGHT-OF-WAY LINE
- LOT LINE
- EASEMENT LINE
- CENTERLINE
- WETLANDS
- RIPARIAN BUFFER
- BUFFER WITH EXISTING VEGETATION NO NEW PLANTING REQUIRED

GRAPHIC SCALE
0 20 40 80
1 inch = 40 ft.

FINAL DRAWING - NOT RELEASED FOR CONSTRUCTION

M:\Projects\AWH\AWH-20000\04-Production\Engineering\CD PKG 3\Current Drawings\AWH20000-CD-Pkg-03-L51.dwg, 12/13/2023 11:25:28 AM, Tommy Daboll

McADAMS
The John R. McAdams Company, Inc.
2905 Meridian Parkway
Durham, NC 27713

phone 919. 361. 5000
fax 919. 361. 2269
license number: C-0293, C-187

www.mcadamsco.com

CLIENT

ASHTON RALEIGH RESIDENTIAL, LLC.
900 RIDGEFIELD DRIVE, SUITE 335
RALEIGH, NORTH CAROLINA 27609
PHONE: 919. 422. 7663
CONTACT: BOB MISHLER

ASHTON WOODS

THE POINT
PHASES 8 AND 14
CONSTRUCTION DRAWINGS - PACKAGE 3
EAST YOUNG STREET
TOWN OF ROLESVILLE, WAKE FOREST TOWNSHIP, WAKE COUNTY, NORTH CAROLINA

CD XX-XX

NORTH CAROLINA LANDSCAPE ARCHITECTURE SARA RUNGE DONOGHUE 2027 NOT FOR CONSTRUCTION

REVISIONS

NO. DATE

PLAN INFORMATION

PROJECT NO.	AWH-20000
FILENAME	AWH20000-CD-PKG-03-U1
CHECKED BY	SRD
DRAWN BY	JGY
SCALE	1"=40'
DATE	12. 13. 2023

SHEET

LANDSCAPE PLAN AREA "M"

L5.13

M:\Projects\AWH\AWH-20000\04-Production\Engineering\CD PKG 3\Current Drawings\AWH20000-CD-PKG-03-L51.dwg, 12/13/2023 11:26:45 AM, Tommy Daboll

McADAMS

The John R. McAdams Company, Inc.
2905 Meridian Parkway
Durham, NC 27713

phone 919. 361. 5000
fax 919. 361. 2269
license number: C-0293, C-187

www.mcadamsco.com

CLIENT

ASHTON RALEIGH RESIDENTIAL, LLC.
900 RIDGEFIELD DRIVE, SUITE 335
RALEIGH, NORTH CAROLINA 27609
PHONE: 919. 422. 7663
CONTACT: BOB MISHLER

ASHTON WOODS

THE POINT
PHASES 8 AND 14
CONSTRUCTION DRAWINGS - PACKAGE 3
EAST YOUNG STREET
TOWN OF ROLESVILLE, WAKE FOREST TOWNSHIP, WAKE COUNTY, NORTH CAROLINA

CD XX-XX

NORTH CAROLINA PROFESSIONAL ENGINEER SEAL 049324 SARA RUNGE DONOHUE NOTARY PUBLIC CONSTRUCTION 2027

REVISIONS

NO. DATE

PLAN INFORMATION

PROJECT NO.	AWH-20000
FILENAME	AWH20000-CD-PKG-03-U1
CHECKED BY	SRD
DRAWN BY	JGY
SCALE	1"=40'
DATE	12. 13. 2023

SHEET

LANDSCAPE PLAN AREA "N"

L5.14

SEE SHEET L5.13

SEE SHEET L5.18

MARROW COURT
(50' PUBLIC R/W)

REVERIE WAY
(50' PUBLIC R/W)

TROUPE WAY
(50' PUBLIC R/W)

REVERIE WAY
(50' PUBLIC R/W)

REVERIE WAY
(50' PUBLIC R/W)

EXISTING PROPERTY LINE

N51° 05' 56"W 682.19'

25' TYPE B LANDSCAPE BUFFER

RETAINING WALL
(DESIGN BY OTHERS)

RETAINING WALL
(DESIGN BY OTHERS)

OWNER: QUAD TRI LLC OLIVE, MARTHA
PIN: 1758726794
REID: 0052027
D.B.: 016161, PG. 01089
ACREAGE: 12.84
ZONING: R-1

VARIABLE WIDTH TEMPORARY
CONSTRUCTION EASEMENT (TYP.)

STORMWATER CONTROL
MEASURE "L"
(WET POND)

OS-4

4" SANITARY SEWER
SERVICE WITH CLEANOUTS

OS-3

OS-2

S87° 42' 18"W 98.94'

BLOW-OFF
ASSEMBLY
(TYP.)

VARIABLE WIDTH TEMPORARY
CONSTRUCTION EASEMENT (TYP.)

STORMWATER CONTROL
MEASURE ACCESS AND
MAINTENANCE EASEMENT

25' TYPE B LANDSCAPE BUFFER

S87° 34' 15"W 804.51'

TOP OF BANK
(TYP.)

50' NEUSE RIPARIAN BUFFER
(MEASURED 50' FROM TOP
OF BANK, EACH SIDE)

OS-4

25' TYPE B LANDSCAPE BUFFER

EXISTING PROPERTY LINE

OWNER: LILES FAMILY, LLC
PIN: 1758928330
REID: 0042125
D.B.: 009920, PG. 01879
ACREAGE: 79.28
ZONING: R-1

OWNER: SCARBORO, EDWARD W JR.
AND SPENCER
PIN: 1758712719
REID: 0077364
ACREAGE: 56.73
ZONING: R-1

SANITARY SEWER OUTFALL TO
EXISTING SANITARY SEWER
(SEE SHEET C4.19 FOR
CONTINUATION)

RETAINING WALL
(DESIGN BY OTHERS)

PHASE 14

PHASE 8

PHASE 8

SITE LEGEND

ACCESSIBLE RAMPS
TYPE A TYPE B TYPE C

DE STORM DRAINAGE EASEMENT

PHASE LINE
PROPERTY LINE
RIGHT-OF-WAY LINE
LOT LINE
EASEMENT LINE
CENTERLINE
WETLANDS
RIPARIAN BUFFER
BUFFER WITH EXISTING VEGETATION
NO NEW PLANTING REQUIRED

INDEX MAP
1"=2000'
AREA "M" L5.13
AREA "N" L5.14
AREA "O" L5.17
AREA "P" L5.18

30" VALLEY GUTTER WILL BE USED IN FRONT OF ALL FRONT LOADED SINGLE FAMILY LOTS AND TOWNHOME LOTS.

DE STORM DRAINAGE EASEMENT

GRAPHIC SCALE
0 20 40 80
1 inch = 40 ft.

FINAL DRAWING - NOT RELEASED FOR CONSTRUCTION

M:\Projects\AWH\AWH-20000\04-Production\Engineering\CD PKG 3\Current Drawings\AWH20000-CD-Pkg-03-L51.dwg, 12/13/2023 11:27:25 AM, Tommy Daboll

McADAMS
The John R. McAdams Company, Inc.
2905 Meridian Parkway
Durham, NC 27713

phone 919. 361. 5000
fax 919. 361. 2269
license number: C-0293, C-187

www.mcadamsco.com

CLIENT

ASHTON RALEIGH RESIDENTIAL, LLC.
900 RIDGEFIELD DRIVE, SUITE 335
RALEIGH, NORTH CAROLINA 27609
PHONE: 919. 422. 7663
CONTACT: BOB MISHLER

ASHTON WOODS

THE POINT
PHASES 8 AND 14
CONSTRUCTION DRAWINGS - PACKAGE 3
EAST YOUNG STREET
TOWN OF ROLESVILLE, WAKE FOREST TOWNSHIP,
WAKE COUNTY, NORTH CAROLINA

CD XX-XX

NORTH CAROLINA PROFESSIONAL ENGINEER SEAL 049102 SARA RUNGE DONOCE 2027 NOT FOR CONSTRUCTION

REVISIONS

NO. DATE

PLAN INFORMATION

PROJECT NO.	AWH-20000
FILENAME	AWH20000-CD-PKG-03-U1
CHECKED BY	SRD
DRAWN BY	JGY
SCALE	1"=40'
DATE	12. 13. 2023

SHEET

LANDSCAPE PLAN
AREA "Q"

L5.17

M:\Projects\AWH\AWH-20000\04-Production\Engineering\CD PKG 3\Current Drawing\AWH20000-CD-PKG-03-L51.dwg, 12/13/2023 11:28:09 AM, Tommy Daboll

McADAMS
The John R. McAdams Company, Inc.
2905 Meridian Parkway
Durham, NC 27713

phone 919. 361. 5000
fax 919. 361. 2269
license number: C-0293, C-187

www.mcadamsco.com

CLIENT

ASHTON RALEIGH RESIDENTIAL, LLC.
900 RIDGEFIELD DRIVE, SUITE 335
RALEIGH, NORTH CAROLINA 27609
PHONE: 919. 422. 7663
CONTACT: BOB MISHLER

ASHTON WOODS

THE POINT
PHASES 8 AND 14
CONSTRUCTION DRAWINGS - PACKAGE 3
EAST YOUNG STREET
TOWN OF ROLESVILLE, WAKE FOREST TOWNSHIP,
WAKE COUNTY, NORTH CAROLINA

CD XX-XX

NORTH CAROLINA PROFESSIONAL LANDSCAPE ARCHITECT SEAL 2027 SARA RUNGE DONOHOE NOTARY PUBLIC WAKE COUNTY

REVISIONS

NO.	DATE

PLAN INFORMATION

PROJECT NO.	AWH-20000
FILENAME	AWH20000-CD-PKG-03-U1
CHECKED BY	SRD
DRAWN BY	JGY
SCALE	1"=40'
DATE	12. 13. 2023

SHEET

LANDSCAPE PLAN
AREA "R"

L5.18

LANDSCAPE CALCULATIONS

STREETSCAPE BUFFERS

E YOUNG STREET - 30' STREETSCAPE BUFFER — 960 LF
1020 TOTAL LF - 60 LF DRIVEWAY

CANOPY TREES
REQUIRED: 24 (1/40 LF)
PROVIDED: 24

LANDSCAPE BUFFERS

NORTHERN/WESTERN PROPERTY (NC 401 LIMITED CONTROLLED ACCESS HWY) — 587 LF
100' TYPE B LANDSCAPE BUFFER

REQUIRED: PROVIDE AND MAINTAIN A VEGETATED BUFFER ALONG LIMITED CONTROLLED ACCESS HIGHWAYS.

PROVIDED: SEE TYPICAL BUFFER PLANTING DETAILS THIS SHEET FOR PLANTINGS. EXISTING VEGETATION TO COUNT TOWARD BUFFER REQUIREMENT AS INDICATED ON PLAN. ALL EXISTING VEGETATION TO REMAIN UNDISTURBED WHERE APPLICABLE.

SOUTHERN PROPERTY (ABUTTING LILES PROPERTY) — 1794 LF
25' TYPE B LANDSCAPE BUFFER

REQUIRED: PROVIDE A SEMI-OPAQUE VEGETATED BUFFER FROM THE GROUND TO AT LEAST THREE FEET WITH AT LEAST 50% EVERGREEN SPECIES.

PROVIDED: EXISTING VEGETATION TO COUNT TOWARD BUFFER REQUIREMENT (ENTIRE BUFFER LENGTH). ALL EXISTING VEGETATION TO REMAIN UNDISTURBED IN BUFFER AREAS.

EASTERN PROPERTY (ABUTTING LILES PROPERTY) — 680 LF
25' TYPE B LANDSCAPE BUFFER

REQUIRED: PROVIDE A SEMI-OPAQUE VEGETATED BUFFER FROM THE GROUND TO AT LEAST THREE FEET WITH AT LEAST 50% EVERGREEN SPECIES.

PROVIDED: EXISTING VEGETATION TO COUNT TOWARD BUFFER REQUIREMENT (ENTIRE BUFFER LENGTH). ALL EXISTING VEGETATION TO REMAIN UNDISTURBED IN BUFFER AREAS.

WESTERN PROPERTY (ABUTTING QUAD TRI LLC PROPERTY) — 775 LF
25' TYPE B LANDSCAPE BUFFER

REQUIRED: PROVIDE A SEMI-OPAQUE VEGETATED BUFFER FROM THE GROUND TO AT LEAST THREE FEET WITH AT LEAST 50% EVERGREEN SPECIES.

PROVIDED: EXISTING VEGETATION TO COUNT TOWARD BUFFER REQUIREMENT (ENTIRE BUFFER LENGTH). ALL EXISTING VEGETATION TO REMAIN UNDISTURBED IN BUFFER AREAS.

PROVIDED: SEE TYPICAL BUFFER PLANTING DETAILS THIS SHEET FOR PLANTINGS.

VEHICLE USE AREAS

REVERIE WAY MAIL KIOSK PARKING AREA (LANDSCAPE AREA "N") — 14 SPACES

CANOPY TREES
REQUIRED: ALL SPACES WITHIN 60' FROM PLANTED TREE
PROVIDED: 2

REVERIE WAY SOUTH PARKING AREA (LANDSCAPE AREA "R") — 8 SPACES

CANOPY TREES
REQUIRED: ALL SPACES WITHIN 60' FROM PLANTED TREE
PROVIDED: 1

TYPICAL BUFFER PLANTING

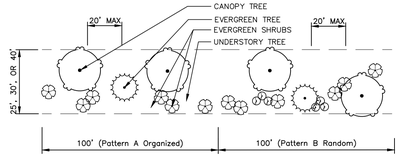

TYPE 'B' BUFFER – 25', 30', AND 40' WIDTH
NOT TO SCALE

TYPE 'B' BUFFER
CREATE A SEMI-OPAQUE BUFFER FROM THE GROUND UP TO A HEIGHT OF AT LEAST 3 FEET. NO UNOBSTRUCTED OPENINGS GREATER THAN 20 FEET BETWEEN CANOPIES OF CANOPY TREES. 50% OF SHRUBS SHALL BE EVERGREEN.

NOTE:
TO MAINTAIN SPECIES DIVERSITY, NO SINGLE TREE OR SHRUB SPECIES SHOULD EXCEED 20% OF OVERALL QUANTITIES.

CANOPY TREE SPECIES
(INSTALLED AT 2.5" CAL., 8' HT. MIN.)
LIRIODENDRON TULIPIFERA
LIQUIDAMBAR STYRACIFLUA 'ROTUNDILOBA'
NYSSA SYLVATICA
QUERCUS NUTTALLII
QUERCUS PHELLOS
QUERCUS RUBRA
PLATANUS OCCIDENTALIS
ULMUS AMERICANA 'PRINCETON'

EVERGREEN TREE SPECIES
(INSTALLED AT 1.5" CAL., 8' HT. MIN.)
CEDRUS DEODORA
MAGNOLIA GRANDIFLORA
PINUS TAEDA
THUJA OCCIDENTALIS 'GREEN GIANT'

UNDERSTORY TREE SPECIES
(INSTALLED AT 1.5" CAL, 6' HT. MIN.)
CARPINUS CAROLINIANA
CERCIS CANADENSIS
CHIONANTHUS RETUSUS
CORNUS 'SPP'
ILEX OPACA 'CAROLINA #2'
ILEX X EMILY BRUNER'
ILEX VOMITORIA
JUNIPERUS VIRGINIANA
PISTACHIA CHINENSIS
VIBURNUM AWABUKI
VIBURNUM DENTATUM

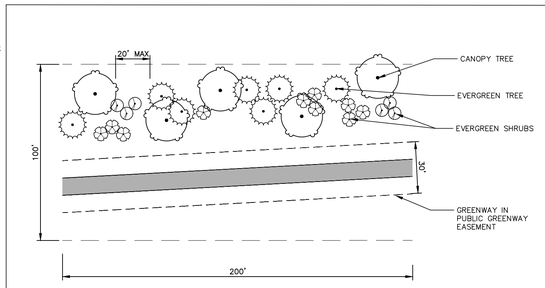

TYPE 'B' BUFFER – 100' WIDTH
NOT TO SCALE

TYPE 'B' BUFFER
CREATE A SEMI-OPAQUE BUFFER FROM THE GROUND UP TO A HEIGHT OF AT LEAST 3 FEET. NO UNOBSTRUCTED OPENINGS GREATER THAN 20 FEET BETWEEN CANOPIES OF CANOPY TREES. 50% OF SHRUBS SHALL BE EVERGREEN.

NOTE:
TO MAINTAIN SPECIES DIVERSITY, NO SINGLE TREE OR SHRUB SPECIES SHOULD EXCEED 20% OF OVERALL QUANTITIES.

CANOPY TREE SPECIES
(INSTALLED AT 2.5" CAL., 8' HT. MIN.)
LIRIODENDRON TULIPIFERA
LIQUIDAMBAR STYRACIFLUA 'ROTUNDILOBA'
NYSSA SYLVATICA
QUERCUS NUTTALLII
QUERCUS PHELLOS
QUERCUS RUBRA
PLATANUS OCCIDENTALIS
ULMUS AMERICANA 'PRINCETON'

EVERGREEN TREE SPECIES
(INSTALLED AT 1.5" CAL., 8' HT. MIN.)
CEDRUS DEODORA
MAGNOLIA GRANDIFLORA
PINUS TAEDA
THUJA OCCIDENTALIS 'GREEN GIANT'

UNDERSTORY TREE SPECIES
(INSTALLED AT 1.5" CAL, 6' HT. MIN.)
CARPINUS CAROLINIANA
CERCIS CANADENSIS
CHIONANTHUS RETUSUS
CORNUS 'SPP'
ILEX OPACA 'CAROLINA #2'
ILEX X EMILY BRUNER'
ILEX VOMITORIA
JUNIPERUS VIRGINIANA
PISTACHIA CHINENSIS
VIBURNUM AWABUKI
VIBURNUM DENTATUM

EVERGREEN SHRUB SPECIES
(INSTALLED AT 36" HT. MIN.)
CALLICARPA AMERICANA
ILEX CORNUTA 'NEEDLEPOINT'
ILEX GLABRA 'NIGRA'
ILEX CRENATA 'COMPACTA'
AZALEA HYBRIDS
ILLICIUM PARVIFOLIUM
MYRICA SP.
ILEX VOMITORIA 'NANA'
CAMELLIA SASANQUA
OSMANTHUS X FORTUNEI
PRUNUS CAROLINIANA
HYDRANGEA MACROPHYLLA

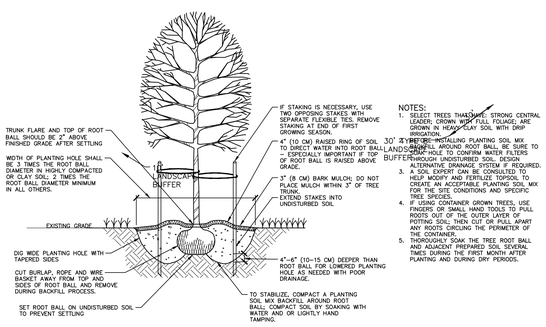

NOTES:
1. SELECT TREES THAT HAVE STRONG CENTRAL LEADER; CROWN WITH FULL FOLIAGE; ARE GROWN IN HEAVY CLAY SOIL WITH DRIP IRRIGATION.
2. BEFORE INSTALLING PLANTING SOIL MIX FILL HOLE AROUND ROOT BALL BE SURE TO SOAK HOLE TO CONFIRM WATER FILTERS THROUGH UNDISTURBED SOIL. DESIGN ALTERNATIVE DRAINAGE SYSTEM IF REQUIRED.
3. A SOIL EXPERT CAN BE CONSULTED TO HELP MODIFY AND FERTILIZE TOPSOIL TO CREATE AN ACCEPTABLE PLANTING SOIL MIX FOR THE SITE CONDITIONS AND SPECIFIC PLANT NEEDS.
4. IF USING CONTAINER GROWN TREES, USE FINGERS OR SMALL HAND TOOLS TO PULL ROOTS OUT OF THE OUTER LAYER OF POTTING SOIL; THEN CUT OR PULL APART ANY ROOTS CIRCLING THE PERIMETER OF THE CONTAINER.
5. THOROUGHLY SOAK THE TREE ROOT BALL AND ADJACENT PREPARED SOIL SEVERAL TIMES DURING THE FIRST MONTH AFTER PLANTING AND DURING DRY PERIODS.

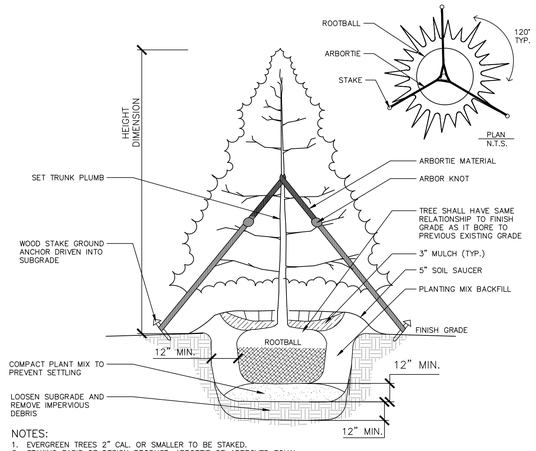

NOTES:
1. EVERGREEN TREES 2" CAL. OR SMALLER TO BE STAKED.
2. STAKING BASIS OF DESIGN PRODUCT: ARBORTIE OR APPROVED EQUAL.
3. STAKING TO BE REMOVED AFTER 2 GROWING SEASONS PER MANUFACTURER'S SPECIFICATIONS.
4. PROVIDE WATER CRYSTALS PER MANUFACTURER'S RECOMMENDATIONS FOR PINE TREES.

MAINTENANCE NOTES:

1. WARRANTY: INSTALLER SHALL REPAIR OR REPLACE ANY PLANTINGS THAT FAIL IN MATERIALS, WORKMANSHIP, OR GROWTH WITHIN ONE YEAR AFTER THE DATE OF SUBSTANTIAL COMPLETION. FAILURES INCLUDE, BUT ARE NOT LIMITED TO, THE FOLLOWING:
   - DEATH AND UNSATISFACTORY GROWTH, EXCEPT FOR DEFECTS RESULTING FROM LACK OF ADEQUATE MAINTENANCE, NEGLECT, ABUSE BY OWNER, OR INCIDENTS THAT ARE BEYOND CONTRACTOR'S CONTROL.
   - STRUCTURAL FAILURES INCLUDING PLANTINGS FALLING OR BLOWING OVER.
2. THE OWNER OF THE PROPERTY AND THEIR AGENTS, HEIRS OR ASSIGNS SHALL BE RESPONSIBLE FOR THE INSTALLATION, PRESERVATION AND MAINTENANCE OF ALL PLANTINGS AND PHYSICAL FEATURES ON THIS PLAN. FAILURE TO MAINTAIN ALL PLANTINGS IN ACCORDANCE WITH THIS PLAN MAY CONSTITUTE A VIOLATION OF THIS ORDINANCE AND MAY RESULT IN FINES. THE OWNER SHALL BE RESPONSIBLE FOR MAINTENANCE OF THE VEGETATION, INCLUDING BUT NOT LIMITED TO:
   - FERTILIZATION
   - PRUNING WITHIN LIMITS
   - PEST CONTROL
   - MULCHING
   - MOWING
   - PROTECTION OF THE ROOT ZONES FROM EQUIPMENT, CONSTRUCTION AND RELATED MATERIALS, ETC.
   - METHOD OF IRRIGATION
   - OTHER CONTINUING MAINTENANCE OPERATIONS

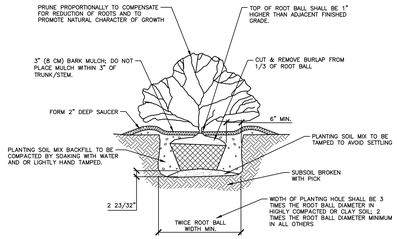

GENERAL LANDSCAPE NOTES:

1. ALL MATERIALS AND METHODS OF CONSTRUCTION SHALL BE IN ACCORDANCE WITH THE TOWN OF ROLESVILLE AND THE STATE OF NORTH CAROLINA STANDARDS AND SPECIFICATIONS.
2. CONTRACTOR IS RESPONSIBLE FOR THE SITE INSPECTION BEFORE LANDSCAPE CONSTRUCTION AND INSTALLATION IN ORDER TO BECOME FAMILIAR WITH THE EXISTING CONDITIONS.
3. LANDSCAPE CONTRACTOR IS RESPONSIBLE FOR LOCATING ALL UNDERGROUND UTILITIES BEFORE BEGINNING DEMOLITION OR INSTALLATION.
4. CONTRACTOR SHALL NOTIFY LANDSCAPE ARCHITECT OF ANY DISCREPANCIES BETWEEN THE NOTES, SPECIFICATIONS, DRAWINGS OR SITE CONDITIONS FOR RESOLUTION PRIOR TO INSTALLATION.
5. ANY DAMAGE TO UTILITIES SHALL BE REPAIRED AT THE CONTRACTOR'S EXPENSE.
6. VERIFICATION OF TOTAL PLANT QUANTITIES AS SHOWN IN THE PLANT SCHEDULE SHALL BE THE RESPONSIBILITY OF THE LANDSCAPE CONTRACTOR. ANY DISCRPANCIES SHALL BE BROUGHT TO THE ATTENTION OF THE LANDSCAPE ARCHITECT.
13. SUBSTITUTIONS OF SPECIFIC PLANTS CAN ONLY OCCUR WITH PRIOR WRITTEN PERMISSION OF BOTH OWNER AND LANDSCAPE ARCHITECT.
14. CONTRACTOR TO ENSURE PROPER STABILIZATION AND SEEDING OF THE SITE IN ACCORDANCE WITH APPLICABLE REGULATIONS.
15. LANDSCAPE MATERIAL SHALL BE WELL FORMED, VIGOROUS, GROWING SPECIMENS WITH GROWTH TYPICAL OF VARIETIES SPECIFIED AND SHALL BE FREE FROM DAMAGE, INSECTS AND DISEASES. MATERIAL SHALL EQUAL OR SURPASS #1 QUALITY AS DEFINED IN THE CURRENT ISSUE OF "AMERICAN STANDARD FOR NURSERY STOCK" AS PUBLISHED BY AMERICAN HORT - AMERICANHORT.ORG.
16. ALL PLANT MATERIAL IS TO BE CAREFULLY HANDLED BY THE ROOT BALL, NOT THE TRUNK, BRANCHES AND/OR FOLIAGE OF THE PLANT. MISHANDLED PLANT MATERIAL MAY BE REJECTED BY THE LANDSCAPE ARCHITECT.
17. ALL PLANT MATERIAL IS TO BE WELL ROOTED, NOT ROOT BOUND, SUCH THAT THE ROOT BALL REMAINS INTACT THROUGHOUT THE PLANTING PROCESS. DEFICIENT PLANT MATERIAL MAY BE REJECTED BY THE LANDSCAPE ARCHITECT OR OWNER.
18. ALL PLANTS TO BE A MINIMUM OF WHAT IS SPECIFIED IN THE PLANT SCHEDULE. ANY CHANGES OR SUBSTITUTIONS SHALL BE APPROVED BY THE LANDSCAPE ARCHITECT AND GOVERNING JURISDICTION PRIOR TO ANY HOLE BEING DUG.
19. ALL TREES MUST BE PLANTED AFTER OCTOBER 1 AND BEFORE MARCH 31.
20. CONTRACTOR TO COORDINATE WITH OWNER'S REPRESENTATIVE AND LANDSCAPE ARCHITECT TO ESTABLISH THE EXTENTS OF MULCH/SEED/SOD IF NOT SPECIFICALLY SHOWN ON PLANS.
21. CONTRACTOR SHALL PROVIDE POSITIVE DRAINAGE IN ALL PLANTING AREAS.
22. PROPOSED TREES TO BE PLANTED A MINIMUM 15 FEET FROM ANY LIGHT POLE AS MEASURED FROM TRUNK OF THE TREE TO THE POLE.
23. PROPOSED TREES TO BE PLANTED A MINIMUM 5 FEET FROM ANY FIRE HYDRANT AS MEASURED FROM TRUNK OF THE TREE TO THE HYDRANT.
24. ALL TREE PLANTINGS SHALL BE MULCHED WITH 3 INCHES OF SHREDDED BARK OR 4 INCHES OF PINE STRAW IN A 3 FOOT RADIUS AROUND THE TREE, OR TO THE DRIPLINE, WHICHEVER IS GREATER. THE MULCH SHALL BE FREE OF TRASH AND MAINTAINED WEED FREE THEREAFTER. MULCH SHALL NOT COVER THE ROOT COLLAR.

McADAMS
The John R. McAdams Company, Inc.
2905 Meridian Parkway
Durham, NC 27713

phone 919. 361. 5000
fax 919. 361. 2269
license number: C-0293, C-187

www.mcadamsco.com

CLIENT

ASHTON RALEIGH RESIDENTIAL, LLC.
900 RIDGEFIELD DRIVE, SUITE 335
RALEIGH, NORTH CAROLINA 27609
PHONE: 919. 422. 7663
CONTACT: BOB MISHLER

ASHTON WOODS

THE POINT
PHASES 8 AND 14
CONSTRUCTION DRAWINGS - PACKAGE 3
EAST YOUNG STREET
TOWN OF ROLESVILLE, WAKE FOREST TOWNSHIP, WAKE COUNTY, NORTH CAROLINA

CD XX-XX

REVISIONS

NO. DATE

PLAN INFORMATION

PROJECT NO.	AWH-20000
FILENAME	AWH20000-CD-PKG-03-U1
CHECKED BY	SRD
DRAWN BY	JGY
SCALE	1"=40'
DATE	12. 13. 2023

SHEET

CODE LANDSCAPE NOTES

L5.20

FINAL DRAWING - NOT RELEASED FOR CONSTRUCTION

M:\Projects\AWH\AWH-20000\04-Production\Engineering\CD PKG 3\Current Drawings\AWH20000-CD-Pkg-03-L51.dwg, 12/13/2023 11:28:56 AM, Tommy Dabolt