\\browngay.net\panzura\Regions\NCA\Projects\Lennar\8430-03 - Lennar - School Street - Rolesville\03 - DWG\PlanSheets\On-Site\C8-0 - SITE-DETL.dwg   Layout: C8-0 SITE DETAILS (1 OF 3)   Plotted: 10/2/2023 4:06:31 PM

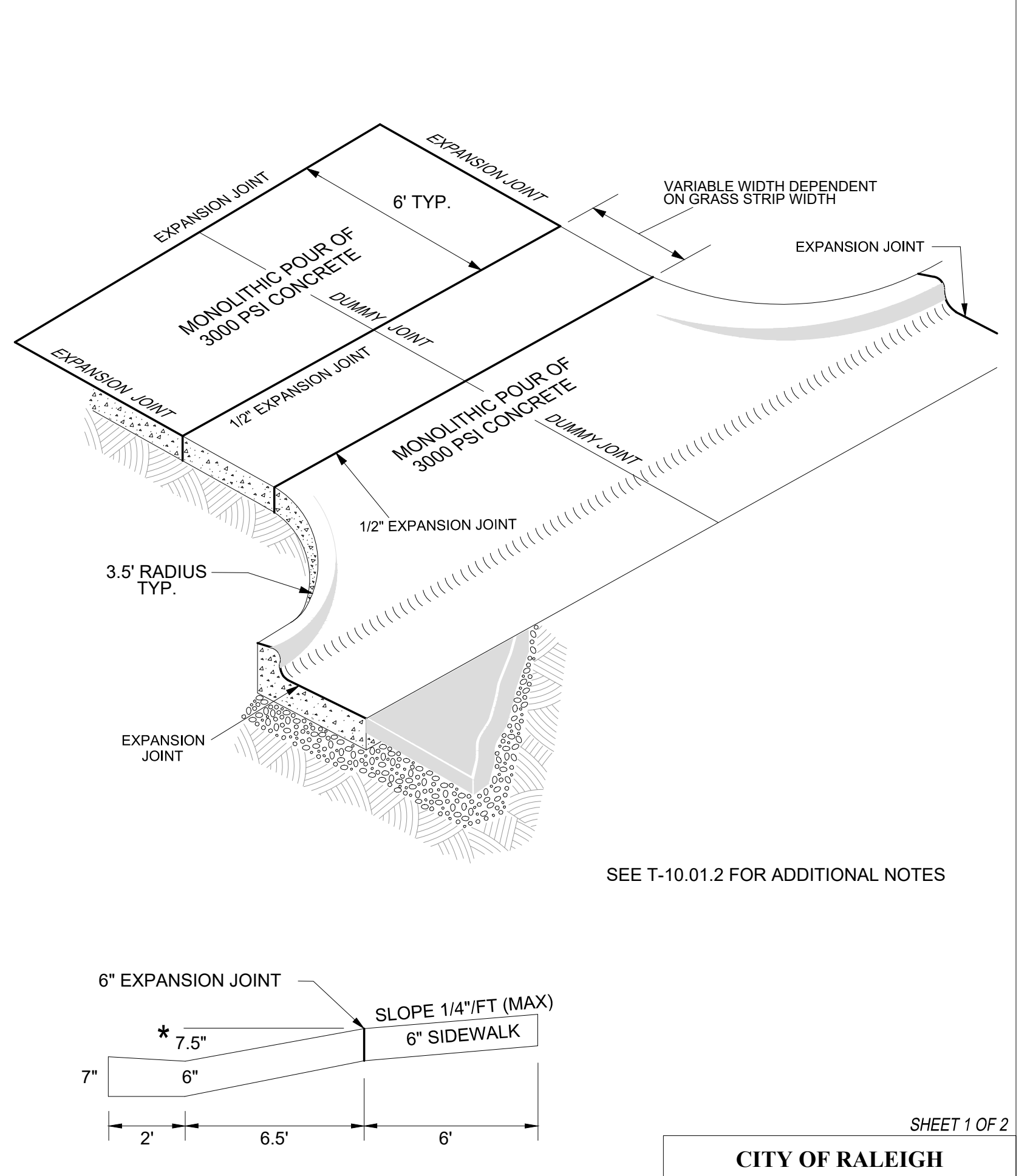

SEE T-10.01.2 FOR ADDITIONAL NOTES

* USE 6.5' WHEN DRIVEWAY IS USED IN LIEU OF A WHEELCHAIR RAMP TO ACCOMMODATE 12:1 MAXIMUM SLOPE (ADA COMPLIANT), SUCH AS IN A CUL-DE SAC.

SHEET 1 OF 2

CITY OF RALEIGH
STANDARD DETAIL
REVISIONS | DATE: 8/2020 | NOT TO SCALE
DRIVEWAY AND SIDEWALK DETAIL
T-10.01.1

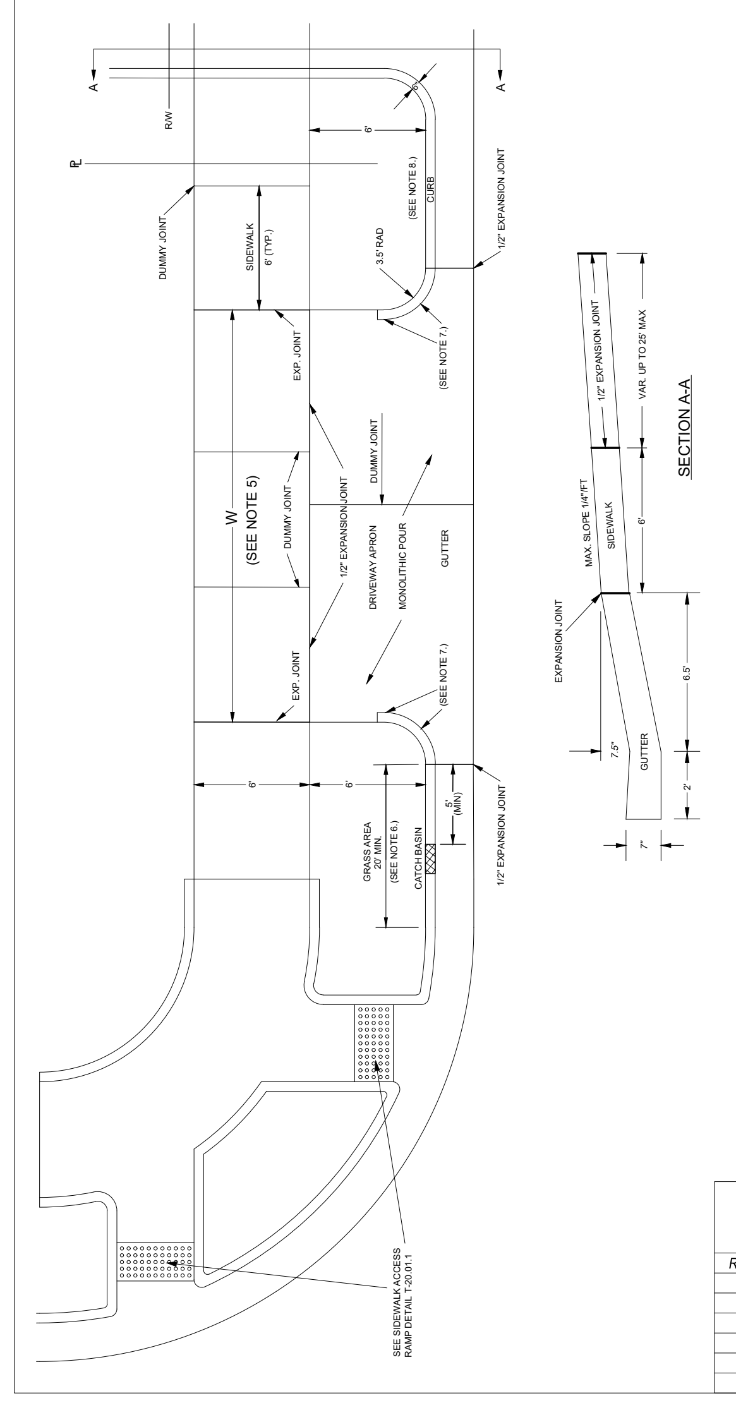

NOTES:

1. WHEN A DRIVEWAY IS TO BE CONSTRUCTED WHERE FINAL LAYER OF ASPHALT HAS BEEN PLACED, THE CURB CAN BE SAW CUT IN A STRAIGHT LINE AND REMOVED. IF THE FINAL LAYER HAS NOT BEEN PLACED, THE ENTIRE CURB AND GUTTER SHALL BE REMOVED AND THE DRIVEWAY SHALL BE A MONOLITHIC POUR USING 3000 PSI ,MAX. 4" SLUMP CONCRETE.
2. EXPANSION MATERIAL SHALL EXTEND THE FULL DEPTH OF THE CONCRETE. 1/2" EXPANSION JOINTS ALONG SIDEWALK SHALL BE LOCATED AT NOT MORE THAN 40' INTERVALS & DUMMY CONSTRUCTION JOINTS AT 6' INTERVALS. DUMMY JOINTS SHALL BE AT LEAST 1/3 THE SLAB THICKNESS IN DEPTH.
3. SLOPE ON UNPAVED AREAS BETWEEN BACK OF CURB & SIDEWALK SHALL BE 1/4" PER FT.
4. NO EXPOSED AGGREGATE OR OTHER SPECIAL SURFACE TREATMENTS IN ROW.
5. W-DIMENSION AS SHOWN ON PLAN VIEW SHALL BE AS FOLLOWS:
   10' MINIMUM, 18' MAXIMUM FOR RESIDENTIAL DRIVEWAYS
   36' MAXIMUM FOR COMMERCIAL DRIVEWAYS
6. THE DISTANCE FROM THE END OF A STREET CURB RADIUS TO THE BEGINNING OF THE DRIVEWAY RADIUS SHOULD BE MINIMUM OF 20 FT.
7. CURB RADIUS TO BE DISSIPATED BETWEEN LIMITS NOTED ABOVE.
8. 7' MIN. BETWEEN DRIVEWAYS ON ADJACENT LOTS.
   45' MIN. BETWEEN DRIVEWAYS ON SAME LOT.
9. NO RADIUS ENCROACHMENT SHALL BE ALLOWED ACROSS AN ADJOINING PROP. FRONTAGE. THIS IS DETERMINED BY EXTENDING A LINE FROM THE PROPERTY CORNER PERPENDICULAR TO THE R/W TO THE CURB AND GUTTER LOCATION.
10. ALL CONCRETE MUST BE POURED ON SAME DAY AS INSPECTION OR RE-INSPECTION IS REQUIRED.
11. DRIVEWAY RADIUS SHALL BE A MINIMUM OF 5' FROM ANY CATCH BASIN.

SHEET 2 OF 2

CITY OF RALEIGH
STANDARD DETAIL
REVISIONS | DATE: 8/2020 | NOT TO SCALE
DRIVEWAY AND SIDEWALK DETAIL
T-10.01.2

DRIVEWAY GRADES

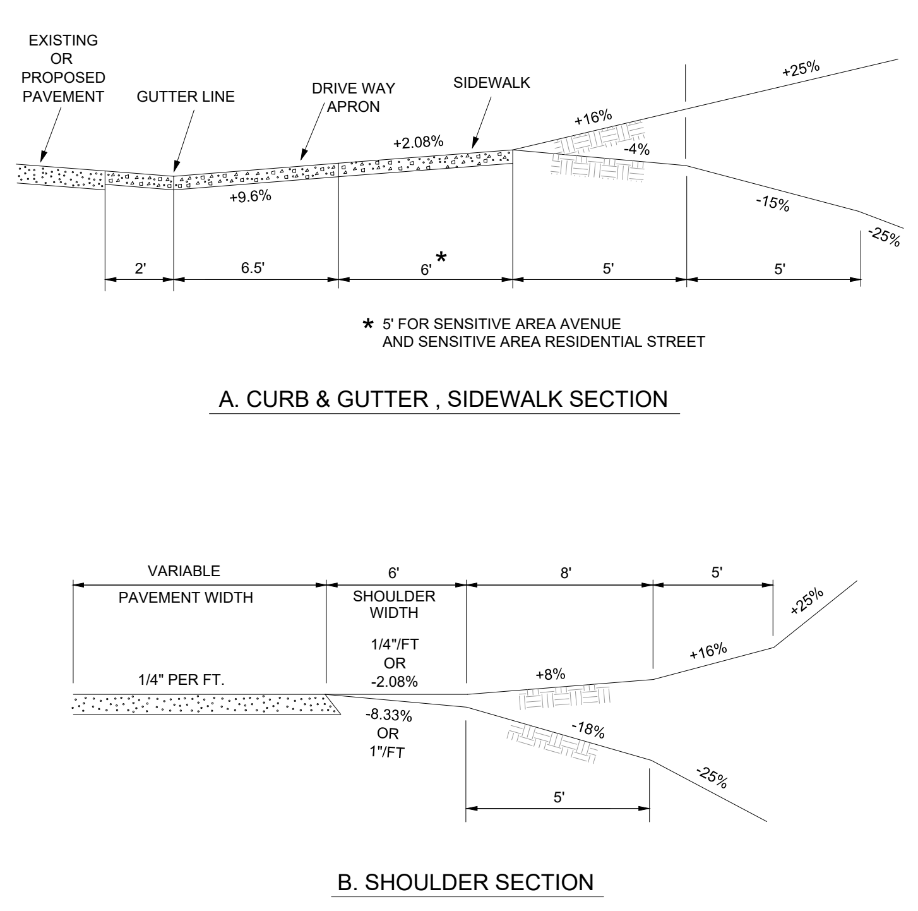

NOTES:
IF THE SLOPE BETWEEN THE TOP OF CURB AND GUTTER AND A POINT 30 FEET FROM THE CURB AND GUTTER EXCEEDS 20%, THIS SLOPE SHALL BE ADJUSTED TO A MAXIMUM OF 8.33% (1"/FT) UP OR 4.17% (1/2" /FT) DOWN.

CITY OF RALEIGH
STANDARD DETAIL
REVISIONS | DATE: 8/2020 | NOT TO SCALE
DRIVEWAY GRADES
T-10.04

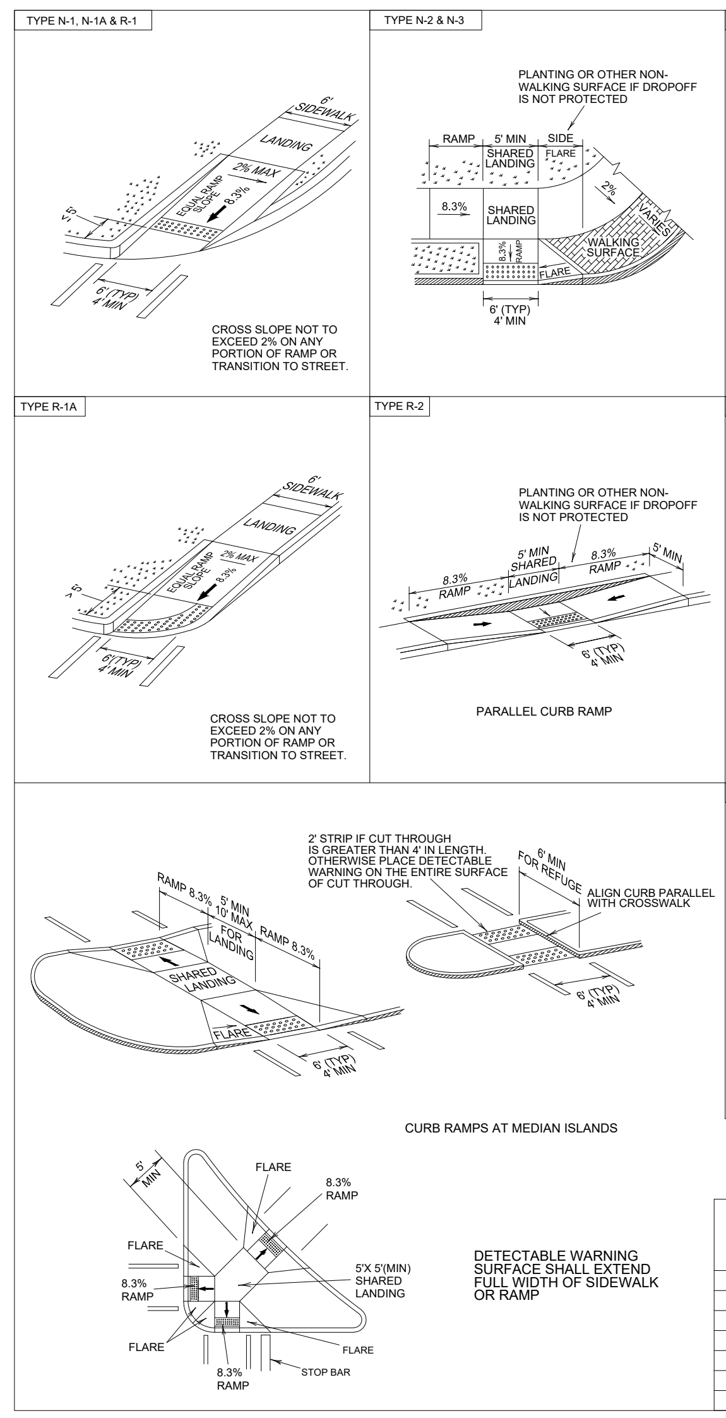

SHEET 1 OF 4

CITY OF RALEIGH
STANDARD DETAIL
REVISIONS | DATE: 8/2020 | NOT TO SCALE
DETECTABLE WARNING SURFACE PLACEMENT
T-20.04.1

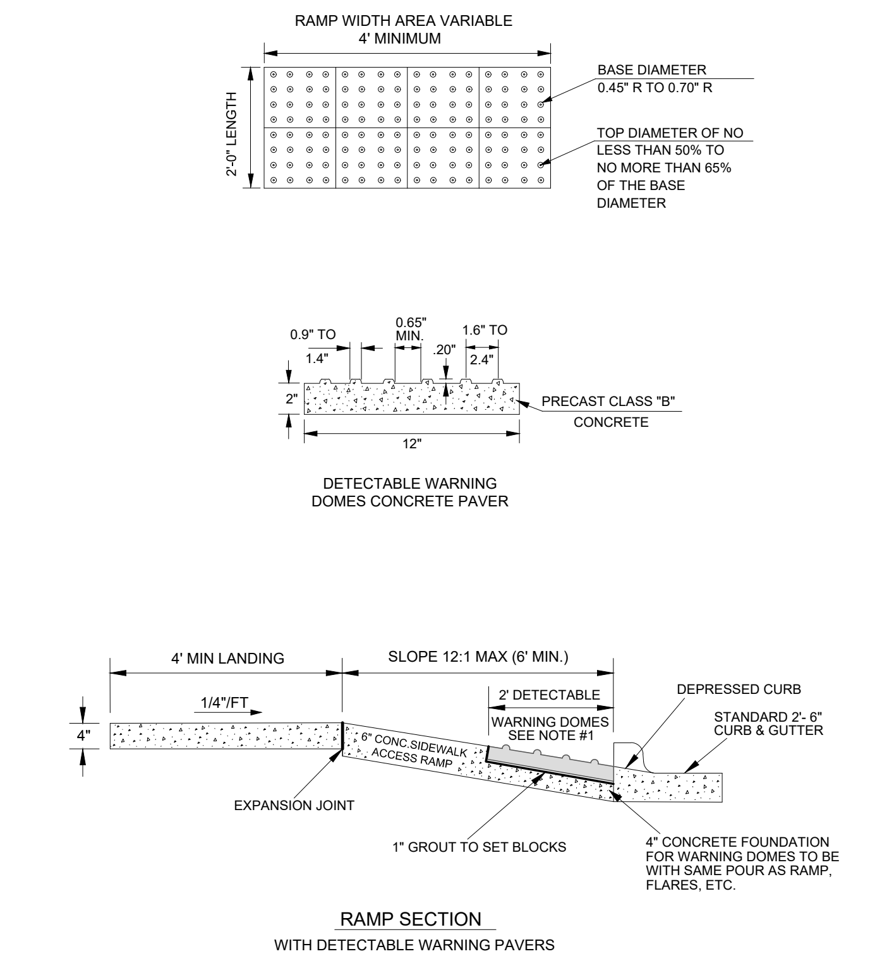

RAMP SECTION
WITH DETECTABLE WARNING PAVERS

NOTES:
1. DETECTABLE WARNING DOMES SHALL COVER 2'-0" LENGTH AND FULL WIDTH OF THE RAMP FLOOR AS SHOWN ON DETAIL. SIZE OF PAVER SHALL BE 1' X 1'.
2. THE COLOR FOR THE DETECTABLE WARNING AREA SHALL BE YELLOW FOR CONTRAST.

SHEET 2 OF 4

CITY OF RALEIGH
STANDARD DETAIL
REVISIONS | DATE: 8/2020 | NOT TO SCALE
DETECTABLE WARNING SURFACE PAVERS
T-20.04.2

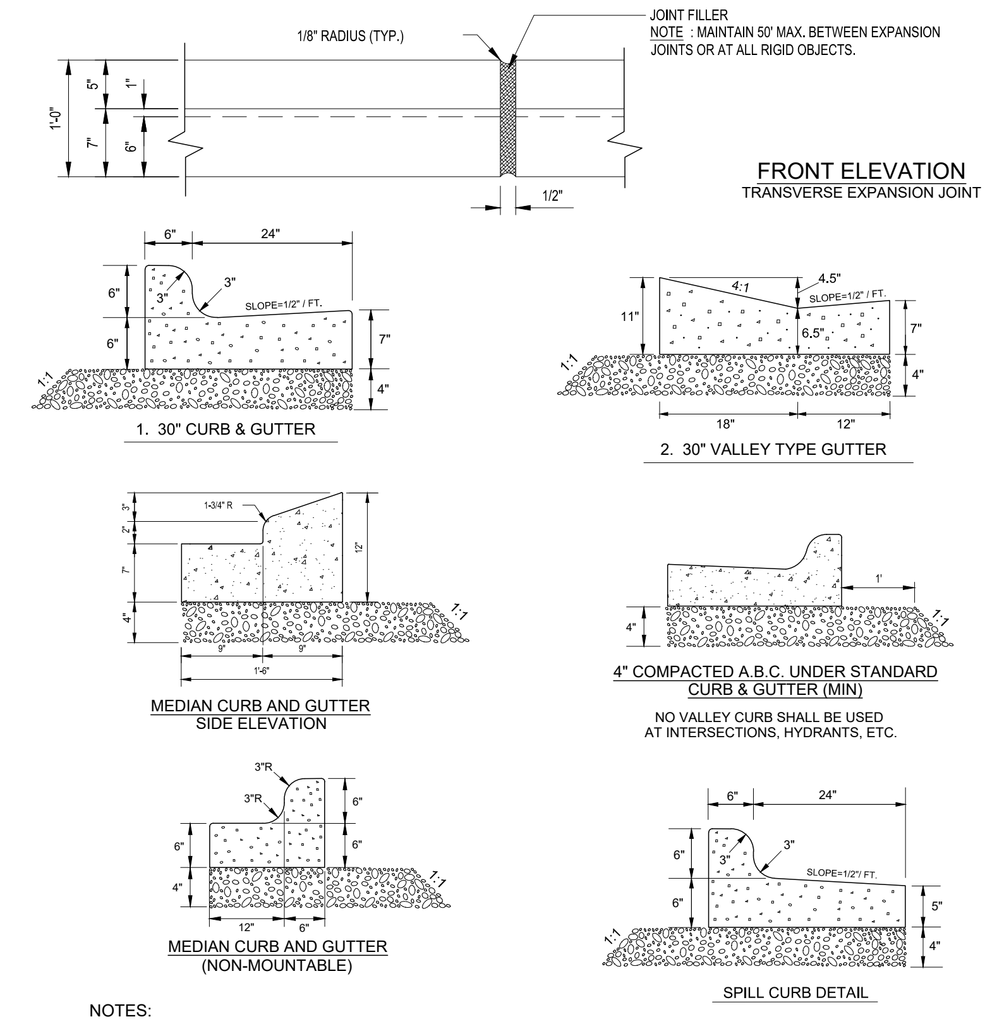

NOTES:
1. 10' MAXIMUM BETWEEN DUMMY JOINTS.
   15' MAXIMUM BETWEEN DUMMY JOINTS ON MACHINE POURS.
2. 1/2" EXPANSION JOINT EVERY 50'.
3. 3000 PSI CONCRETE MINIMUM, 4" SLUMP MAXIMUM.
4. LIQUID MEMBRANE CURING COMPOUND SHALL MEET THE REQUIREMENTS OF SECTION 1026-2 OF NCDOT STANDARDS & SPECIFICATIONS FOR ROADS AND STRUCTURES.
5. ALL CONSTRUCTION JOINTS SHALL BE FILLED WITH JOINT FILLER AND SEALER IN ACCORDANCE WITH NCDOT ROADWAY STANDARD DETAIL 846.01 THE JOINT MATERIAL SHALL CONFORM TO SECTION 1028-2 OF NCDOT STANDARD & SPECIFICATIONS FOR ROADS AND STRUCTURES.
6. REFER TO NCDOT DETAIL 846.01 FOR CURB AND GUTTER SUPERELEVATION RATES.

SHEET 1 OF 2

CITY OF RALEIGH
STANDARD DETAIL
REVISIONS | DATE: 8/2020 | NOT TO SCALE
CURB AND GUTTER
T-10.26.1

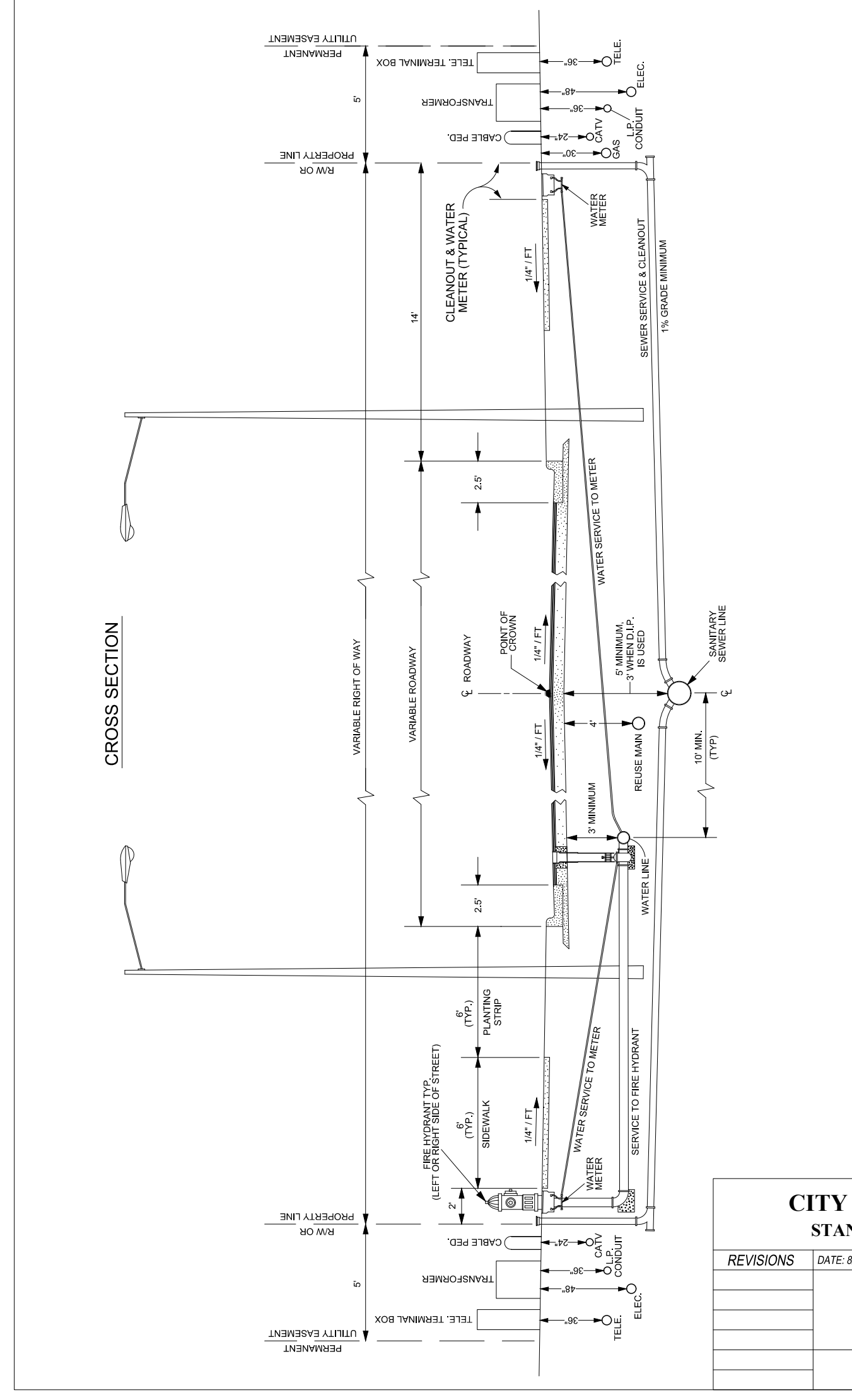

NOTES:
1. WATER AND/OR SANITARY SEWER LINES SHALL BE A MINIMUM OF TWO FEET FROM THE EDGE OF THE CURB AND GUTTER
2. ENCROACHMENT ONTO CITY MAINTAINED RIGHT OF WAY SHALL FOLLOW CONDITIONS OF THE APPLICABLE ENCROACHMENT AGREEMENT OR FRANCHISE AGREEMENT.
3. FOR HYDRANT LOCATION SEE PUBLIC UTILITIES STANDARD DETAIL W-4.
4. PUE TO BE EXPANDED ON A CASE BY CASE BASIS AS NEEDED TO ACCOMMODATE PRIVATE UTILITIES APPURTENANT FACILITIES AND EQUIPMENT.

CITY OF RALEIGH
STANDARD DETAIL
REVISIONS | DATE: 8/2020 | NOT TO SCALE
STANDARD UTILITY LOCATIONS IN STREET
T-10-29

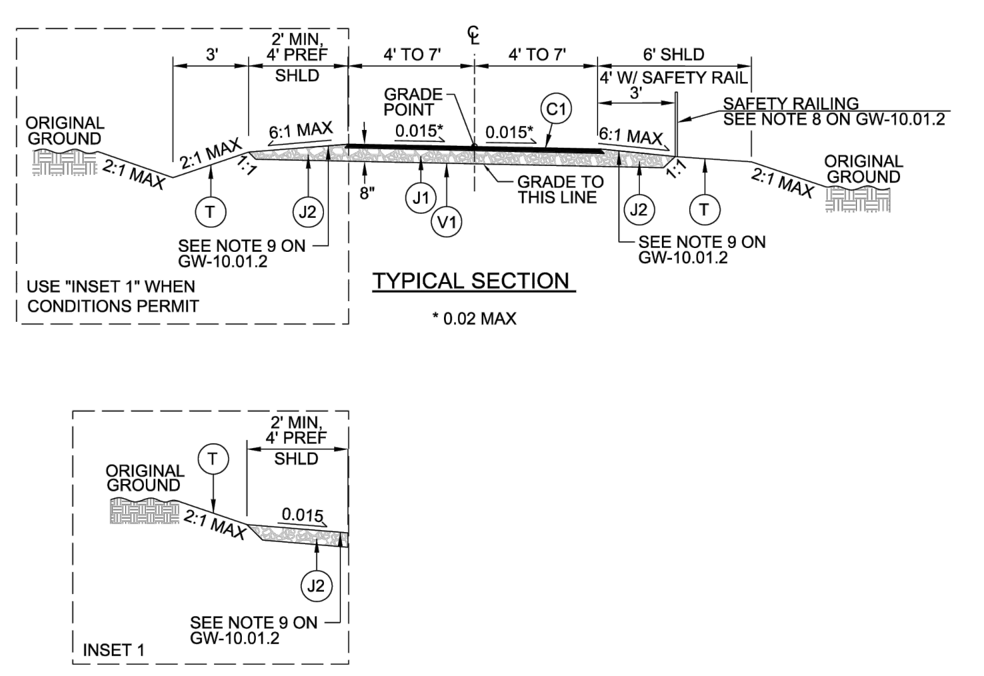

ASPHALT TYPICAL TRAIL SECTION
VARIABLE WIDTH (8' MIN, 14' MAX)

PAVEMENT SCHEDULE	
C1	2" ASPHALT CONCRETE SURFACE COURSE, TYPE S9.5B, AT AN AVERAGE RATE OF 220 LBS. PER SQ. YD. OR 110 LBS. PER SQ. YD. IN EACH OF TWO LAYERS
J1	6" AGGREGATE BASE COURSE
J2	VARIABLE DEPTH AGGREGATE BASE COURSE
T	EARTH MATERIAL
V1	GEOTEXTILE FOR PAVEMENT STABILIZATION

SHEET 1 OF 2

CITY OF RALEIGH
STANDARD DETAIL
REVISIONS | DATE: 12/2022 | NOT TO SCALE
ASPHALT TYPICAL TRAIL SECTION VARIABLE WIDTH (8' MIN, 14' MAX)
GW-10.01.1

ASPHALT TYPICAL TRAIL SECTION VARIABLE WIDTH (8' MIN, 14' MAX) - NOTES:

1. TRAIL WIDTH TO BE DETERMINED BY CITY OF RALEIGH.
2. WHEN CONDITIONS PERMIT, USE 6' SHOULDER IN FILL SECTIONS AND 4' SHOULDER IN CUT SECTIONS. USE MINIMUM 2' SHOULDER IN CUT AND FILL SECTIONS. FOR CUT SECTION CONDITION SHOWN IN "INSET 1," APPLY ENGINEERING JUDGMENT TO DETERMINE IF UPHILL SIDE REQUIRES A SWALE.
3. TRAILS OR TRAIL SEGMENTS OF ANY LENGTH MAY BE CONSTRUCTED WITH RUNNING SLOPES/VERTICAL GRADES UP TO 1:20 (5%). TO ACCOMMODATE STEEP TERRAIN, TRAILS MAY BE DESIGNED WITH STEEPER SECTIONS OF CONSTRAINED LENGTH AS SHOWN IN TABLE 1. RESTING INTERVALS WITH FLATTER GRADES ARE REQUIRED BETWEEN TRAIL SEGMENTS ANY TIME THE RUNNING SLOPE EXCEEDS 1:20 (5%). RESTING INTERVALS SHALL BE LOCATED ON UPHILL SIDE OF TRAIL IF ONLY PROVIDED ON ONE SIDE.
4. TO ENSURE THAT A TRAIL IS NOT DESIGNED AS A SERIES OF STEEP SEGMENTS, NO MORE THAN 30% OF THE TOTAL LENGTH OF TRAIL MAY HAVE A RUNNING SLOPE/VERTICAL GRADE of 7.5% (8.33% OR 1:12 MAX). RESTING INTERVALS MUST BE PROVIDED MORE FREQUENTLY AS THE RUNNING SLOPE INCREASES.
5. RUNNING SLOPE/VERTICAL GRADE RECOMMENDATIONS MAY NOT BE ABLE TO BE ACHIEVED FOR TRAIL REPLACEMENT PROJECTS. FOR THESE TYPES OF PROJECTS, REPLACEMENT OF THE EXISTING CONDITION IN KIND IS SUFFICIENT.
6. 1.5% (2.08% OR 1:48 MAX) CROSS SLOPE. CROSS SLOPE DIRECTION VARIES. SLOPE SHOULDERS FOR POSITIVE DRAINAGE. OFTEN REQUIRES CONTINUING PAVEMENT OR SHOULDER SLOPE UNTIL TIE-IN WITH NATURAL GROUND. SEE PLAN SHEETS AND CROSS SECTIONS.
7. WHEN CONDITIONS PERMIT, SHOULDERS TO MATCH CROSS SLOPE OF TRAIL AND SIDE SLOPES TO BE 3:1 OR FLATTER.
8. PROVIDE A SAFETY RAIL FOR THE FOLLOWING CIRCUMSTANCES WITHIN 6' OF THE EDGE OF PAVEMENT: 1) SLOPE > 3:1 AND DROP OF 6'; 2) SLOPE > 2:1 AND DROP OF 4'; 3) SLOPE > 1:1 AND DROP OF 1'. REFER TO GW-20.01 AND GW-20.02 FOR SAFETY RAIL DETAILS.
9. CONTRACTOR GRADE SEED SHALL BE SEWN INTO AGGREGATE BASE COURSE ON SHOULDERS AT THE SURFACE.
10. CONTRACTOR IS RESPONSIBLE FOR RE-ESTABLISHING ALL SLOPES DISTURBED DURING CONSTRUCTION.
11. PROOF ROLLING SHALL OCCUR IN PRESENCE OF THE OWNER OR THE OWNER'S TESTING AGENCY AT THE FOLLOWING STAGES: 1) PRIOR TO PLACING FILL IN LOW AREAS; 2) AFTER THE PREPARATION OF SUBGRADE PRIOR TO PLACING ABC; 3) AFTER THE PLACEMENT OF ABC PRIOR TO PAVING.
12. PAVEMENT EDGE SLOPES ARE 1:1 UNLESS OTHERWISE NOTED.
13. NO ABOVE-GROUND UTILITIES OR UTILITY SURFACE COVERS/PLATES/MANHOLES SHALL BE LOCATED WITHIN THE TRAIL AND SHALL BE A MINIMUM OF 2' FROM THE EDGE OF TRAIL. RAISED MANHOLES SHALL BE A MINIMUM OF 4' FROM THE EDGE OF TRAIL.

TABLE 1 - MAXIMUM RUNNING SLOPE AND TRAIL SEGMENT LENGTH

RUNNING SLOPE	MAX LENGTH OF SEGMENT
1:20 (5%)	200 FT
1:12 (8.33%)	30 FT

SHEET 2 OF 2

CITY OF RALEIGH
STANDARD DETAIL
REVISIONS | DATE: 12/2022 | NOT TO SCALE
ASPHALT TYPICAL TRAIL SECTION VARIABLE WIDTH (8' MIN, 14' MAX)
GW-10.01.2

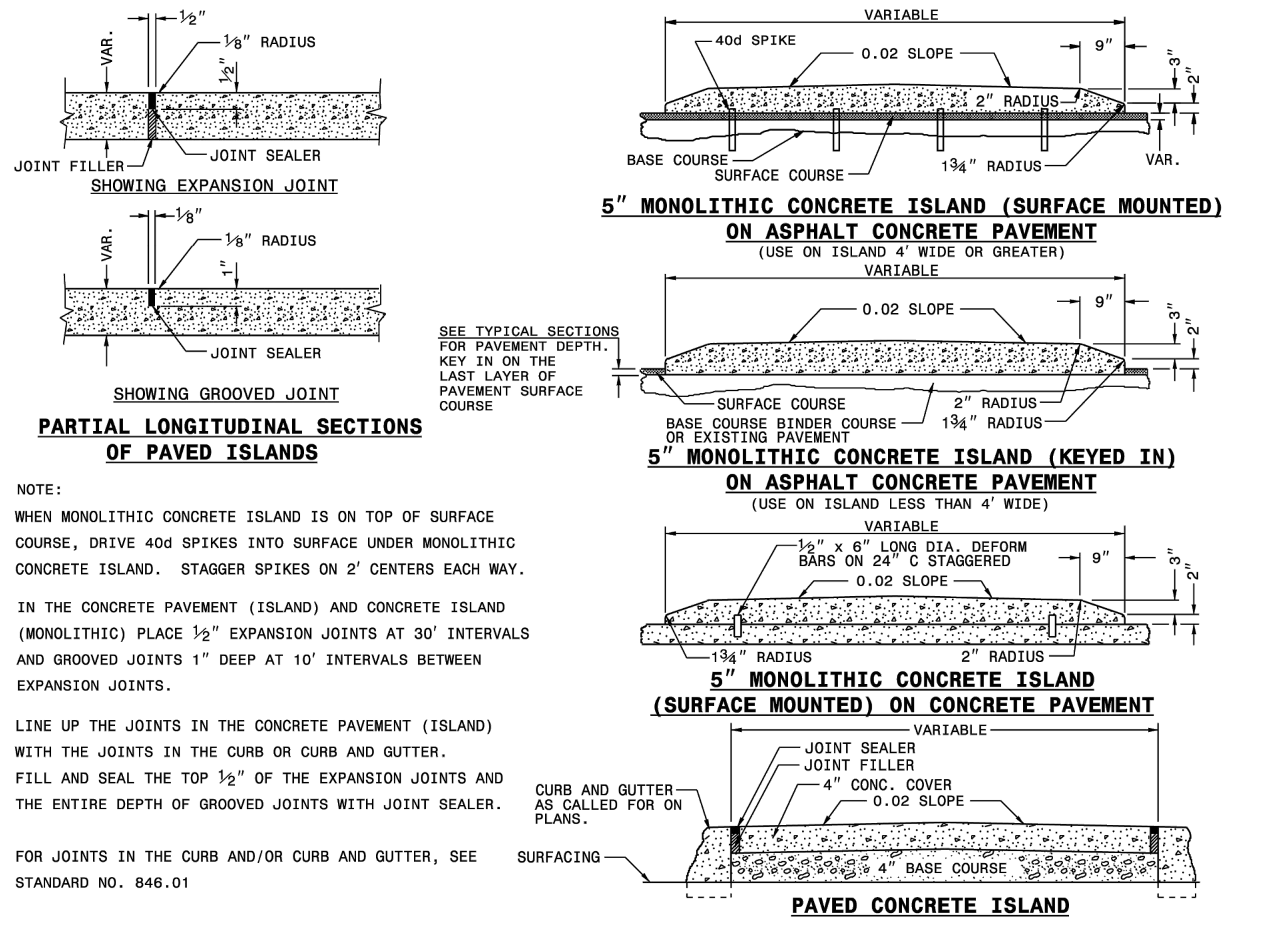

NOTE:
WHEN MONOLITHIC CONCRETE ISLAND IS ON TOP OF SURFACE COURSE, DRIVE 40d SPIKES INTO SURFACE UNDER MONOLITHIC CONCRETE ISLAND. STAGGER SPIKES ON 2' CENTERS EACH WAY.

IN THE CONCRETE PAVEMENT (ISLAND) AND CONCRETE ISLAND (MONOLITHIC) PLACE 1/2" EXPANSION JOINTS AT 30' INTERVALS AND GROOVED JOINTS 1" DEEP AT 10' INTERVALS BETWEEN EXPANSION JOINTS.

LINE UP THE JOINTS IN THE CONCRETE PAVEMENT (ISLAND) WITH THE JOINTS IN THE CURB OR CURB AND GUTTER. FILL AND SEAL THE TOP 1/2" OF THE EXPANSION JOINTS AND THE ENTIRE DEPTH OF GROOVED JOINTS WITH JOINT SEALER.

FOR JOINTS IN THE CURB AND/OR CURB AND GUTTER, SEE STANDARD NO. 846.01

STATE OF NORTH CAROLINA
DEPT. OF TRANSPORTATION
DIVISION OF HIGHWAYS
RALEIGH, N.C.
1-18
ROADWAY STANDARD DRAWING FOR
CONCRETE ISLANDS
SHEET 1 OF 1
852.01

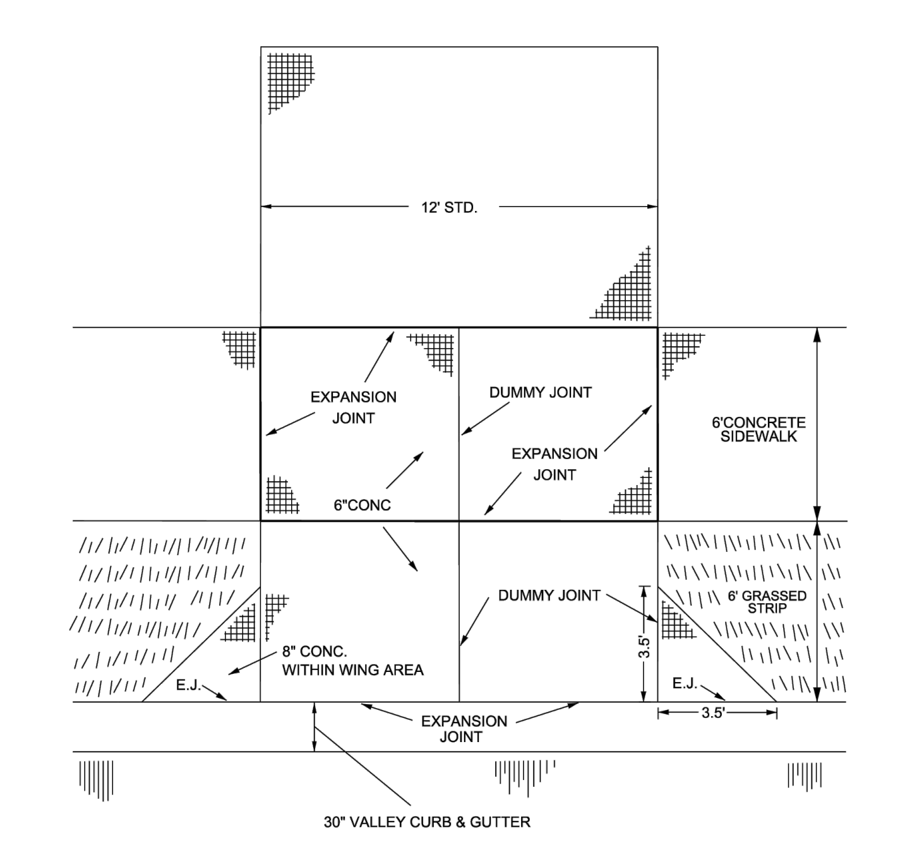

NOTES:
1. SEE STANDARD DETAIL T-10.26.1 FOR CURB AND GUTTER DETAILS.
2. EXPANSION MATERIAL SHALL EXTEND THE FULL DEPTH OF THE CONCRETE.
3. ALL CONCRETE SHALL BE 3000 PSI (MIN.).

CITY OF RALEIGH
STANDARD DETAIL
REVISIONS | DATE: 8/2020 | NOT TO SCALE
DRIVEWAY FOR VALLEY TYPE CURB & GUTTER
T-10.02

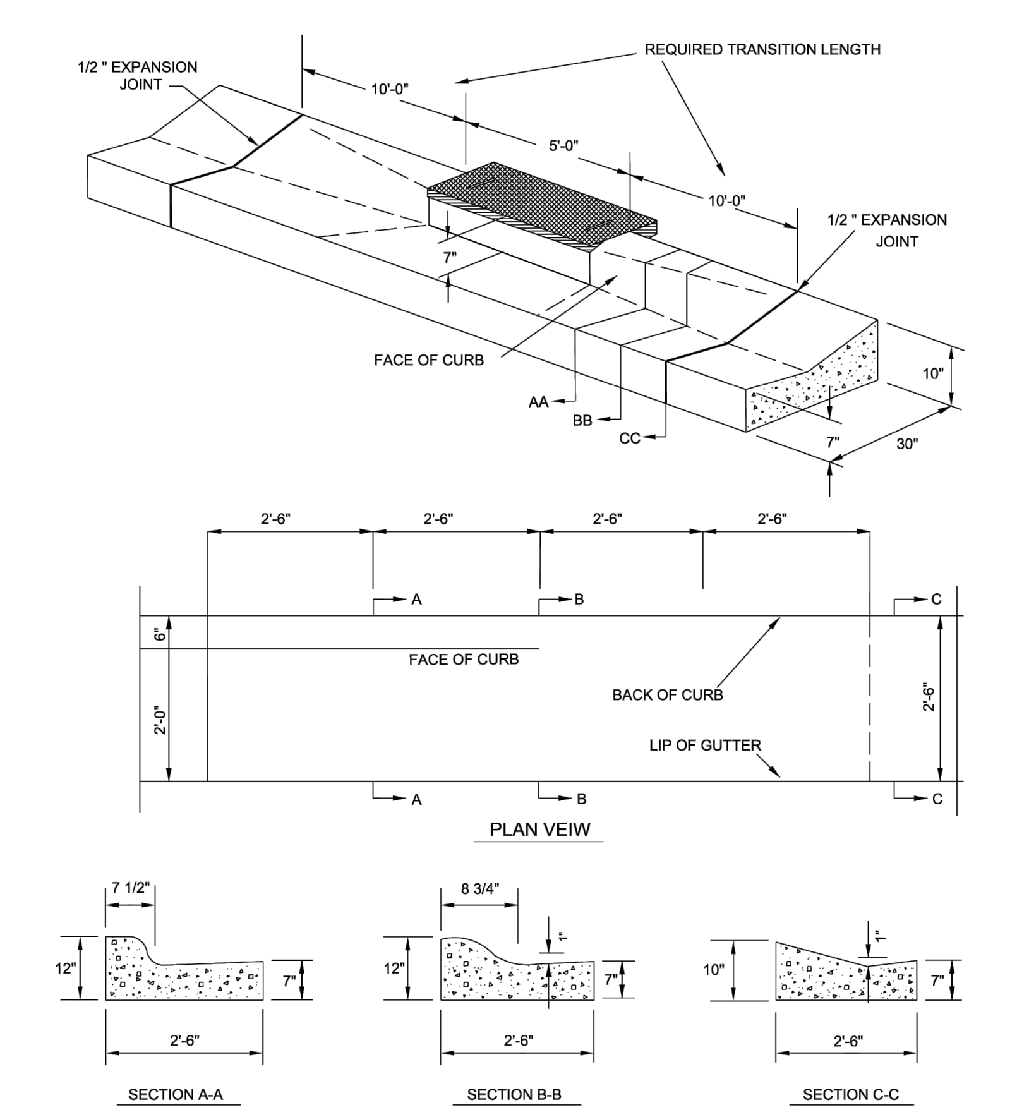

NOTES:
TRANSITION NOT TO BE LOCATED WITHIN THE CURB RADIUS.

SHEET 2 OF 2

CITY OF RALEIGH
STANDARD DETAIL
REVISIONS | DATE: 8/2020 | NOT TO SCALE
CURB TRANSITION TO 2'- 6" VALLEY GUTTER
T-10.26.2

Know what's **below.**
Call before you dig.

REV	DATE	DESCRIPTION
5		
4		
3		
2	10/02/2023	PER TOWN OF ROLESVILLE COMMENT
1	08/01/2023	PER TOWN OF ROLESVILLE COMMENT
	06/01/2023	INITIAL SUBMITTAL

DESIGNED BY: DF/CD
DRAWN BY: DF/JWM
REVIEWED BY: DF

BGE
5440 WADE PARK BLVD, SUITE 102
RALEIGH NC 27607
WWW.BGEINC.COM
NC LICENSE #C-4397
©2023

LENNAR CORPORTAION
1100 PERIMETER PARK DRIVE, SUITE 112
MORRISVILLE / NORTH CAROLINA / 27560

PARKER RIDGE
82 SCHOOL STREET
ROLESVILLE / NORTH CAROLINA / 27571

SITE DETAILS (1 OF 3)

PRELIMINARY
DEBRA M. FERM
NOT FOR CONSTRUCTION

FILE NUMBER: 8430-03
DATE: 10/02/2023
C8-0

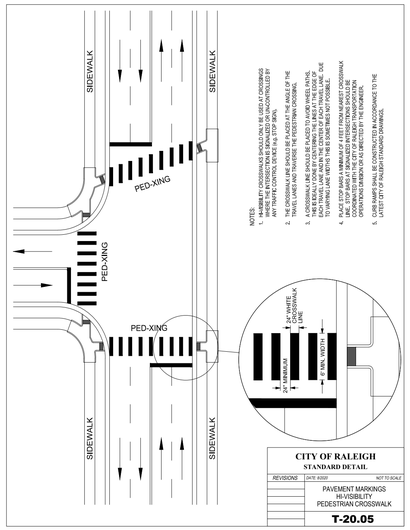

NOTES:
1. A NUMBER OF CROSSWALKS SHOULD ONLY BE USED AT CROSSINGS WHERE THE INTERSECTIONS ARE SIGNALIZED OR UNCONTROLLED BY STOP SIGNS ON ALL APPROACHING ROADS.
2. THE CROSSWALK LINE SHOULD BE PLACED AT THE ANGLE OF THE TRAVEL LANES AND TRAVERSE THE PEDESTRIAN CROSSING.
3. A CROSSWALK LINE SHOULD BE PLACED TO MOVE WHEELS, EXPOSE PEDESTRIANS TO A MINIMUM DISTANCE OF TRAVEL ACROSS EACH TRAVEL LANE, AND IN THE CENTER OF EACH TRAVEL LANE, DUE TO VEHICLES TURNING FROM ADJACENT TRAVEL LANES.
4. PLACE STOP BARS A MINIMUM OF 4 FEET FROM NEAREST CROSSWALK LINE. STOP BARS AT SIGNALIZED INTERSECTIONS SHOULD BE PLACED AS DIRECTED BY THE ENGINEER BASED ON ENGINEERING OPERATIONS OBSERVATIONS AND AS DIRECTED BY THE ENGINEER.
5. PAINT ALL PAVEMENT MARKINGS IN ACCORDANCE WITH THE LATEST EDITION OF RALEIGH STANDARD DRAWINGS.

CITY OF RALEIGH
STANDARD DETAIL

REVISIONS	DATE 8/2021	NOT TO SCALE
	PAVEMENT MARKINGS HI-VISIBILITY PEDESTRIAN CROSSWALK	
	T-20.05	

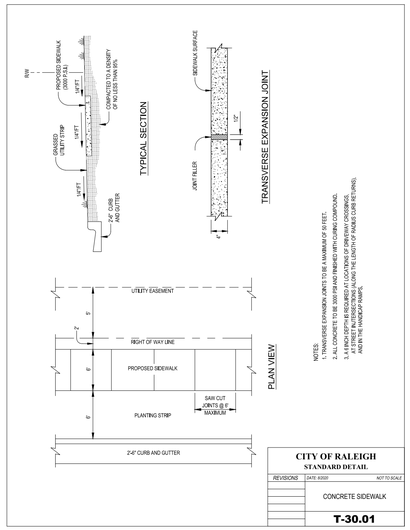

NOTES:
1. TRANSVERSE EXPANSION JOINTS TO BE A MAXIMUM OF 50 FEET.
2. ALL CONCRETE TO BE 3000 PSI AND FINISHED WITH CURING COMPOUND.
3. A 1-INCH DEPTH IS REQUIRED AT LOCATIONS OF DRIVEWAY CROSSINGS, AND A 2-INCH DEPTH IS REQUIRED AT ALL OTHER LOCATIONS, INCLUDING SIDEWALKS AND IN THE HANDICAP RAMPS.

CITY OF RALEIGH
STANDARD DETAIL

REVISIONS	DATE 8/2021	NOT TO SCALE
	CONCRETE SIDEWALK	
	T-30.01	

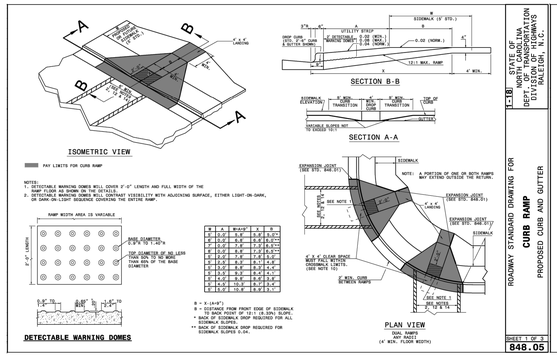

1:18	STATE OF NORTH CAROLINA DEPT. OF TRANSPORTATION DIVISION OF HIGHWAYS RALEIGH, N.C.	ROADWAY STANDARD DRAWING FOR **CURB RAMP** PROPOSED CURB AND GUTTER	SHEET 1 OF 2 **848.05**	

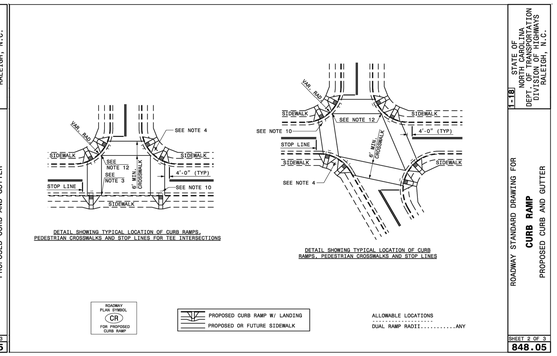

1:18	STATE OF NORTH CAROLINA DEPT. OF TRANSPORTATION DIVISION OF HIGHWAYS RALEIGH, N.C.	ROADWAY STANDARD DRAWING FOR **CURB RAMP** PROPOSED CURB AND GUTTER	SHEET 2 OF 2 **848.05**	

REV	DATE	DESCRIPTION
1	10/02/2023	PER TOWN OF ROLESVILLE COMMENT
1	08/01/2023	PER TOWN OF ROLESVILLE COMMENT
REV	06/01/2023	INITIAL SUBMITTAL

DESIGNED BY: DF/CD
DRAWN BY: DF/JWM
REVIEWED BY: DF

BGE
5440 WADE PARK BLVD, SUITE 102
RALEIGH NC 27607
WWW.BGENC.COM
NC LICENSE #C-4397

LENNAR CORPORTAION
1100 PERIMETER PARK DRIVE, SUITE 112
MORRISVILLE / NORTH CAROLINA / 27560

PARKER RIDGE
82 SCHOOL STREET
ROLESVILLE / NORTH CAROLINA / 27571

SITE DETAILS (2 OF 3)

NOTES:
1. CONSTRUCT THE RAMP SURFACE TO BE STABLE, FIRM, AND SLIP RESISTANT. CONSTRUCT THE CURB RAMP TYPE AS SHOWN IN THE PAVEMENT MARKING PLANS OR AS DIRECTED BY THE ENGINEER.
2. LOCATE CURB RAMPS AND PLACE PEDESTRIAN CROSSWALK MARKINGS AS SHOWN IN THE PAVEMENT MARKING PLANS. WHEN FIELD ADJUSTMENTS REQUIRE MOVING CURB RAMPS OR MARKINGS AS SHOWN, CONTACT THE SIGNING AND DELINEATION UNIT OR LOCATE AS DIRECTED BY THE ENGINEER.
3. COORDINATE THE CURB RAMP AND THE PEDESTRIAN CROSSWALK MARKINGS SO A 4'x4' CLEAR SPACE AT THE BASE OF THE CURB RAMP WILL FALL WITHIN THE PEDESTRIAN CROSSWALK LINES.
4. SET BACK DISTANCE FROM INSIDE CROSSWALK MARKING TO NEAREST EDGE OF TRAVEL LANE IS 4' MINIMUM.
5. REFER TO THE PAVEMENT MARKING PLANS FOR STOP BAR LOCATIONS AT SIGNALIZED INTERSECTIONS. IF A PAVEMENT MARKING PLAN IS NOT PROVIDED, CONTACT THE SIGNAL DESIGN SECTION FOR THE STOP BAR LOCATIONS OR LOCATE AS DIRECTED BY THE ENGINEER.
6. TERMINATE PARKING A MINIMUM OF 20' BACK OF A PEDESTRIAN CROSSWALK.
7. CONSTRUCT CURB RAMPS A MINIMUM OF 4' WIDE.
8. CONSTRUCT THE RUNNING SLOPE OF THE RAMP 8.33% MAXIMUM.
9. ALLOWABLE CROSS SLOPE ON SIDEWALKS AND CURB RAMPS WILL BE 2% MAXIMUM.
10. CONSTRUCT THE SIDE FLARE SLOPE A MAXIMUM OF 10% MEASURED ALONG THE CURB LINE.
11. CONSTRUCT THE COUNTER SLOPE OF THE GUTTER ON STREET AT THE BASE OF THE CURB RAMP A MAXIMUM OF 5% AND MAINTAIN A SMOOTH TRANSITION.
12. CONSTRUCT LANDINGS FOR SIDEWALK A MINIMUM OF 4'x4' WITH A MAXIMUM SLOPE OF 2% IN ANY DIRECTION. CONSTRUCT LANDINGS FOR MEDIAN ISLANDS A MINIMUM OF 5'x5' WITH A MAXIMUM SLOPE OF 2% IN ANY DIRECTION.
13. TO USE A MEDIAN ISLAND AS A PEDESTRIAN REFUGE AREA, MEDIAN ISLANDS WILL BE A MINIMUM OF 6' WIDE. CONSTRUCT MEDIAN ISLANDS TO PROVIDE PASSAGE OVER OR THROUGHT THE ISLAND.
14. SMALL CHANNELIZATION ISLANDS THAT CAN NOT PROVIDE A 5'X5' LANDING AT THE TOP OF A RAMPS, WILL BE CUT THROUGH LEVEL WITH THE SURFACE STREET.
15. CURB RAMPS WITH RETURNED CURBS MAY BE USED ONLY WHERE PEDESTRIANS WOULD NOT NORMALLY WALK ACROSS THE RAMP. THE ADJACENT SURFACE IS PLANTING OR OTHER NON-WALKING SURFACE OR THE SIDE APPROACH IS SUBSTANTIALLY OBSTRUCTED.
16. PLACE A ½" EXPANSION JOINT WHERE THE CONCRETE CURB RAMP JOINS THE CURB AS SHOWN IN ROADWAY STANDARD DRAWING 848.01
17. PLACE ALL PEDESTRIAN PUSH BUTTON ACTUATORS AND CROSSING SIGNALS AS SHOWN IN THE PLANS OR AS SHOWN IN THE MUTCD.
18. CURB RAMPS THROUGH MEDIAN ISLANDS, SINGLE RAMPS AT DUAL CROSSWALKS OR LIMITED R/W SITUATIONS, WILL BE HANDLED BY SPECIAL DETAILS. CONTACT THE CONTRACT STANDARDS AND DEVELOPMENT UNIT FOR THE DETAILS OR FOR A SPECIAL DESIGN.

1:18	STATE OF NORTH CAROLINA DEPT. OF TRANSPORTATION DIVISION OF HIGHWAYS RALEIGH, N.C.	ROADWAY STANDARD DRAWING FOR **CURB RAMPS** NOTES	SHEET 2 OF 2 **848.05**

CURB RAMP AND EXISTING SIDEWALK WITH GRASS STRIP

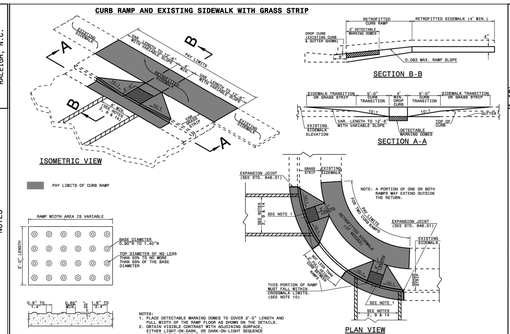

1:18	STATE OF NORTH CAROLINA DEPT. OF TRANSPORTATION DIVISION OF HIGHWAYS RALEIGH, N.C.	ROADWAY STANDARD DRAWING FOR **CURB RAMP** EXISTING CURB AND GUTTER	SHEET 1 OF 2 **848.06**

RETROFITTING DETECTABLE WARNING DOMES ONTO EXISTING CURB RAMP

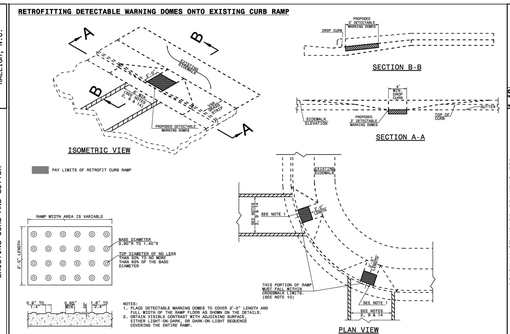

1:18	STATE OF NORTH CAROLINA DEPT. OF TRANSPORTATION DIVISION OF HIGHWAYS RALEIGH, N.C.	ROADWAY STANDARD DRAWING FOR **CURB RAMP** EXISTING CURB AND GUTTER	SHEET 1 OF 2 **848.06**

CURB RAMPS AND EXISTING SIDEWALK ADJACENT TO CURB

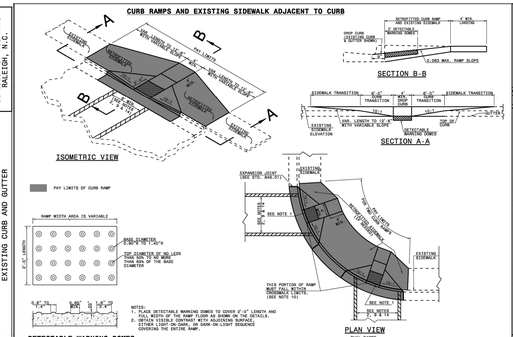

1:18	STATE OF NORTH CAROLINA DEPT. OF TRANSPORTATION DIVISION OF HIGHWAYS RALEIGH, N.C.	ROADWAY STANDARD DRAWING FOR **CURB RAMP** EXISTING CURB AND GUTTER	SHEET 1 OF 2 **848.06**

CURB RAMPS AND EXISTING SIDEWALK

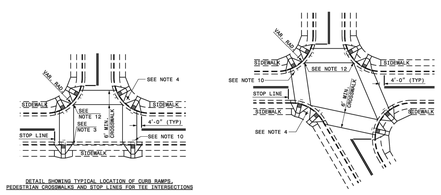

RESURFACING PROJECTS
PROPOSED CURB RAMP W/ LANDING FOR RESURFACING PROJECTS
EXISTING SIDEWALK

ALLOWABLE LOCATIONS
DUAL RAMP RADII.....ANY

1:18	STATE OF NORTH CAROLINA DEPT. OF TRANSPORTATION DIVISION OF HIGHWAYS RALEIGH, N.C.	ROADWAY STANDARD DRAWING FOR **CURB RAMP** EXISTING CURB AND GUTTER	SHEET 2 OF 2 **848.06**

CURB RAMP AND EXISTING SIDEWALK

NOTES:
1. CONSTRUCT THE RAMP SURFACE TO BE STABLE, FIRM, AND SLIP RESISTANT. CONSTRUCT THE CURB RAMP TYPE AS SHOWN IN THE PAVEMENT MARKING PLANS OR AS DIRECTED BY THE ENGINEER.
2. LOCATE CURB RAMPS AND PLACE PEDESTRIAN CROSSWALK MARKINGS AS SHOWN IN THE PAVEMENT MARKING PLANS. WHEN FIELD ADJUSTMENTS REQUIRE MOVING CURB RAMPS OR MARKINGS AS SHOWN, CONTACT THE SIGNING AND DELINEATION UNIT OR LOCATE AS DIRECTED BY THE ENGINEER.
3. COORDINATE THE CURB RAMP AND THE PEDESTRIAN CROSSWALK MARKINGS SO A 4'x4' CLEAR SPACE AT THE BASE OF THE CURB RAMP WILL FALL WITHIN THE PEDESTRIAN CROSSWALK LINES.
4. SET BACK DISTANCE FROM INSIDE CROSSWALK MARKING TO NEAREST EDGE OF TRAVEL LANE IS 4' MINIMUM.
5. REFER TO THE PAVEMENT MARKING PLANS FOR STOP BAR LOCATIONS AT SIGNALIZED INTERSECTIONS. IF A PAVEMENT MARKING PLAN IS NOT PROVIDED, CONTACT THE SIGNAL DESIGN SECTION FOR THE STOP BAR LOCATIONS OR LOCATE AS DIRECTED BY THE ENGINEER.
6. TERMINATE PARKING A MINIMUM OF 20' BACK OF A PEDESTRIAN CROSSWALK.
7. CONSTRUCT CURB RAMPS A MINIMUM OF 4' WIDE.
8. CONSTRUCT THE RUNNING SLOPE OF THE RAMP 8.33% MAXIMUM.
9. ALLOWABLE CROSS SLOPE ON SIDEWALKS AND CURB RAMPS WILL BE 2% MAXIMUM.
10. CONSTRUCT THE SIDE FLARE SLOPE A MAXIMUM OF 10% MEASURED ALONG THE CURB LINE.
11. CONSTRUCT THE COUNTER SLOPE OF THE GUTTER OR STREET AT THE BASE OF THE CURB RAMP A MAXIMUM OF 5% AND MAINTAIN A SMOOTH TRANSITION.
12. CONSTRUCT LANDINGS FOR SIDEWALK A MINIMUM OF 4'x4' WITH A MAXIMUM SLOPE OF 2% IN ANY DIRECTION. CONSTRUCT LANDINGS FOR MEDIAN ISLANDS A MINIMUM OF 5'x5' WITH A MAXIMUM SLOPE OF 2% IN ANY DIRECTION.
13. TO USE A MEDIAN ISLAND AS A PEDESTRIAN REFUGE AREA, MEDIAN ISLANDS WILL BE A MINIMUM OF 6' WIDE. CONSTRUCT MEDIAN ISLANDS TO PROVIDE PASSAGE OVER OR THROUGHT THE ISLAND.
14. SMALL CHANNELIZATION ISLANDS THAT CAN NOT PROVIDE A 5'X5' LANDING AT THE TOP OF A RAMPS, WILL BE CUT THROUGH LEVEL WITH THE SURFACE STREET.
15. CURB RAMPS WITH RETURNED CURBS MAY BE USED ONLY WHERE PEDESTRIANS WOULD NOT NORMALLY WALK ACROSS THE RAMP. THE ADJACENT SURFACE IS PLANTING OR OTHER NON-WALKING SURFACE OR THE SIDE APPROACH IS SUBSTANTIALLY OBSTRUCTED.
16. PLACE A ½" EXPANSION JOINT WHERE THE CONCRETE CURB RAMP JOINS THE CURB AS SHOWN IN ROADWAY STANDARD DRAWING 848.01
17. PLACE ALL PEDESTRIAN PUSH BUTTON ACTUATORS AND CROSSING SIGNALS AS SHOWN IN THE PLANS OR AS SHOWN IN THE MUTCD.
18. CURB RAMPS THROUGH MEDIAN ISLANDS, SINGLE RAMPS AT DUAL CROSSWALKS OR LIMITED R/W SITUATIONS, WILL BE HANDLED BY SPECIAL DETAILS. CONTACT THE CONTRACT STANDARDS AND DEVELOPMENT UNIT FOR THE DETAILS OR FOR A SPECIAL DESIGN.

1:18	STATE OF NORTH CAROLINA DEPT. OF TRANSPORTATION DIVISION OF HIGHWAYS RALEIGH, N.C.	ROADWAY STANDARD DRAWING FOR **CURB RAMP** EXISTING CURB AND GUTTER	SHEET 2 OF 2 **848.06**

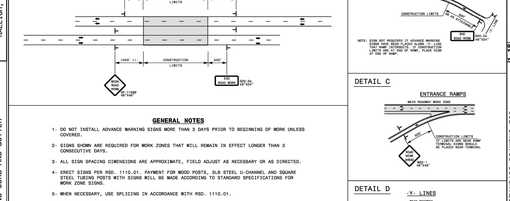

1:18	STATE OF NORTH CAROLINA DEPT. OF TRANSPORTATION DIVISION OF HIGHWAYS RALEIGH, N.C.	ROADWAY STANDARD DRAWING FOR **WORK ZONE ADVANCE WARNING SIGNS FOR 55 MPH FACILITIES**	SHEET 1 OF 3 **1101.01**

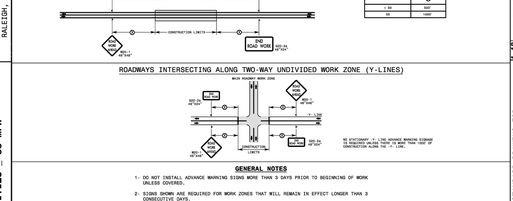

1:18	STATE OF NORTH CAROLINA DEPT. OF TRANSPORTATION DIVISION OF HIGHWAYS RALEIGH, N.C.	ROADWAY STANDARD DRAWING FOR **WORK ZONE ADVANCE WARNING SIGNS FOR TWO-WAY UNDIVIDED FACILITIES**	SHEET 2 OF 3 **1101.01**

NORTH CAROLINA PROFESSIONAL ENGINEER SEAL — DEBRA M. FERN
PRELIMINARY
NOT FOR CONSTRUCTION

FILE NUMBER: 8430-03
DATE: 10/02/2023
C8-1

811 Know what's below. Call before you dig.

\\brownguy.net\panzura\Regions\NCA\Projects\Lennar\8430-03 - Lennar - School Street - Rolesville\03 - DWG\PlanSheets\On-Site\C8-0 - SITE-DETL.dwg Layout: C8-1 SITE DETAILS (2 OF 3) Plotted: 10/2/2023 4:06:35 PM

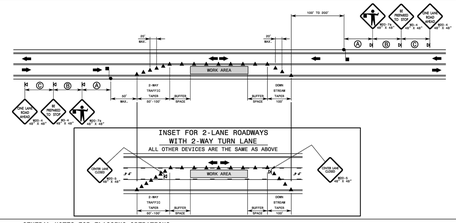

GENERAL NOTES FOR FLAGGING OPERATIONS

1- REFER TO RDD. 1101.11, SHEETS 1 & 4, FOR "L" DISTANCE AND SIGN SPACING.
2- INSTALL LANE CLOSURES WITH THE TRAFFIC FLOW, BEGINNING WITH DEVICES ON THE UPSTREAM SIDE OF TRAFFIC.
3- REMOVE LANE CLOSURES AGAINST THE TRAFFIC FLOW, BEGINNING WITH DEVICES ON THE DOWNSTREAM SIDE OF TRAFFIC.
4- PLACE CONES INTO THE WORK AREA AT THE MAXIMUM SPACING EQUAL IN FEET TO 2 TIMES THE POSTED SPEED LIMIT.
5- EXTEND LANE CLOSURES AS THE BUFFER SPACE SUCH THAT STOPPING SIGHT DISTANCE IS PROVIDED TO THE WORK AREA (SEE RDD. 1101.11, SHEET 3).
6- DO NOT STOP TRAFFIC IN ANY ONE DIRECTION FOR MORE THAN 5 MINUTES AT A TIME.
7- DRUMS OR PATENT DRUMS MAY BE USED IN LIEU OF CONES. REFER TO RDD. 1180.01 "TEMPORARY PAVEMENT MARKINGS".
8- USE FLAGGERS TO CONTROL TRAFFIC AT INTERSECTIONS AFFECTED BY THE LANE CLOSURE. SUPPLEMENT FLAGGERS LOCATED AT "L" ATTENTIONS WITH FLASHING BLINK SIGNS (W20-7A) WHEN FLAGGERS ARE NOT PRESENT. ENSURE THE SIGNS ARE VISIBLE TO ALL INTERSECTING TRAFFIC. INTERSECTIONS PLACE VISIBLE IN "ON FLASH MODE" AND USE LAW ENFORCEMENT.
9- REFER TO THE CURRENT MUTCD FOR FLAGGER CONTROL, REQUIREMENTS, AND PROCEDURES.
10- DO NOT EXCEED A 1 MILE LANE CLOSURE LENGTH UNLESS OTHERWISE SHOWN IN THE TMP OR AS DIRECTED BY THE ENGINEER.
11- IF VEHICLE QUEUES WILL REACH WITHIN 10' OF EITHER SIDE OF ACTIVE RAILROAD TRACKS, ESTABLISH ADDITIONAL ADVANCE WARNING MEASURES TO ALERT DRIVERS OF THE POTENTIAL FOR QUEUING. PROVIDE DIVISION OR FLAGGER EVERY 15 MINUTES TO ASSESS QUEUING. IF WARNING MEASURES ALREADY EXIST.

GENERAL NOTES FOR PILOT CAR OPERATIONS

1- USE PILOT CARS WHEN DIRECTED BY THE ENGINEER.
2- IF ROADWAY WIDTH IS LESS THAN 20 FEET (EDP TO EDP), CONES MAY NOT BE REQUIRED. IF ROADWAY WIDTH IS GREATER THAN 20 FEET (EDP TO EDP) AS DIRECTED BY THE ENGINEER, CONES MAY BE DEPLOYED ALONG THE WORK AREA IF USING A PILOT CAR.
3- CONES ARE ALWAYS REQUIRED IN THE UPSTREAM AND DOWNSTREAM TAPERS.
4- MOUNT SIGN S20-4 "PILOT CAR FOLLOW ME" AT A CONSPICUOUS POSITION ON THE REAR OF THE PILOT VEHICLE.
5- DO NOT INSTALL MORE THAN ONE LIN BTLS OF LANE CLOSURE DEVICES BETWEEN THE BEGINNING OF THE MERGE TAPER TO THE END OF THE LANE CLOSURE.
6- ADVISE RESIDENTS AND BUSINESSES WITHIN THE LANE CLOSURE THAT THERE WILL BE DELAYS DUE TO LANE CLOSURES. THERE IS ONGOING WORK ON SAFETY SUPPORT AND PILOT CAR OPERATIONS.

LEGEND

- FLAGGER
- CONE
- PORTABLE SIGN
- DIRECTION OF TRAFFIC FLOW

ROADWAY STANDARD DRAWING FOR
TEMPORARY LANE CLOSURES
2-LANE, 2-WAY ROADWAY-1 LANE CLOSED

STATE OF NORTH CAROLINA DEPT. OF TRANSPORTATION DIVISION OF HIGHWAYS RALEIGH, N.C.

T-10

SHEET 1 OF 14

1101.02

REV		
	10/02/2023	PER TOWN OF ROLESVILLE COMMENT
	08/01/2023	PER TOWN OF ROLESVILLE COMMENT
	06/01/2023	INITIAL SUBMITTAL

DESIGNED BY: DF/CD
DRAWN BY: DF/JWM
REVIEWED BY: DF

BGE
5440 WADE PARK BLVD, SUITE 102
RALEIGH NC 27607
WWW.BGEINC.COM
NC LICENSE #C-4397

LENNAR CORPORTAION
1100 PERIMETER PARK DRIVE, SUITE 112
MORRISVILLE / NORTH CAROLINA / 27560

PARKER RIDGE
82 SCHOOL STREET
ROLESVILLE / NORTH CAROLINA / 27571

SITE DETAILS (3 OF 3)

NORTH CAROLINA PROFESSIONAL ENGINEER SEAL DEBRA M. FERRY
PRELIMINARY
NOT FOR CONSTRUCTION

FILE NUMBER: 8430-03
DATE: 10/02/2023
C8-2

811 Know what's below. Call before you dig.

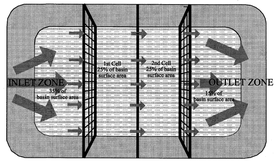

PLAN VIEW

NOTES:
1. BAFFLE MATERIAL SHOULD BE SECURED AT THE BOTTOM AND SIDES USING STAPLES OR BY TRENCHING AS FOR SILT FENCE.
2. MOST OF THE SEDIMENT WILL ACCUMULATE IN THE 1ST BAY, WHICH SHOULD BE READILY ACCESSIBLE FOR MAINTENANCE.
3. PROVIDE 3 BAFFLES (USE TWO IF LESS THAN 20 FEET IN LENGTH). PROVIDE 5 BAFFLES FOR DRAINAGE AREAS GREATER THAN 10 ACRES.
4. BAFFLE SHALL BE 700 G/M2 COIR EROSION BLANKET.
5. TOPS OF BAFFLES SHOULD BE 2 INCHES LOWER THAN THE TOP OF THE BERMS
6. INSPECT BAFFLES FOR REPAIR ONCE A WEEK AND AFTER EACH RAINFALL

CROSS SECTION

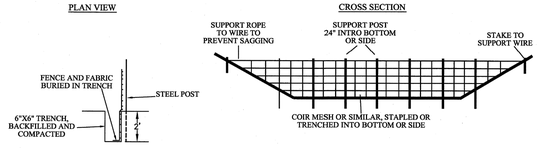

SECTION VIEW AT OPENING

WAKE COUNTY NORTH CAROLINA

EFFECTIVE: 01/31/08

STANDARD BAFFLES DETAIL

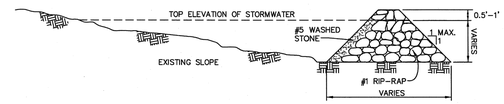

SIDE VIEW

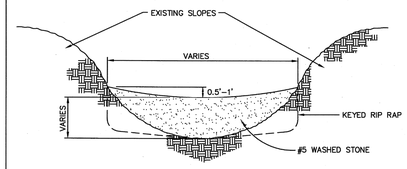

FRONT VIEW

CONSTRUCTION NOTES:

HEIGHT & WIDTH DETERMINED BY EXISTING TOPOGRAPHY AND SEDIMENT STORAGE REQUIRED.

KEY RIP RAP INTO THE DAM FOR STABILIZATION.

STEP SEQUENCE

NOTE: REMOVE SEDIMENT ACCUMULATION FROM BEHIND CHECK DAMS TO PREVENT DAMAGE TO CHANNEL VEGETATION. FLOW SHOULD BE MAINTAINED THROUGH THE DAM.

WAKE COUNTY NORTH CAROLINA

EFFECTIVE: 01/31/08

STANDARD CHECK DAM

NOTES:

1. DIVERSION TO BE USED UPSLOPE OF A CONSTRUCTION SITE TO PREVENT STORM RUNOFF FROM ENTERING THE DISTURBED AREA.
2. IMMEDIATELY LINE AND STABILIZE BEFORE ANY DOWNSLOPE GRADING BEGINS (STABILIZATION MUST OCCUR BEFORE ISSUANCE OF A CERTIFICATE OF COMPLIANCE). STABILIZATION METHOD IS BASED ON VELOCITY OF OFFSITE DRAINAGE.
3. DIVERSIONS SHOULD ONLY BE USED FOR DRAINAGES 5 ACRES OR LESS.
4. ANY SEDIMENT LADEN WATER PRIOR TO STABILIZATION OF THE DIVERSION MUST BE DIVERTED INTO AN APPROVED EROSION AND SEDIMENT CONTROL BMP. CLEAN WATER SHOULD EMPTY INTO AN APPROVED OUTLET DEVICE.

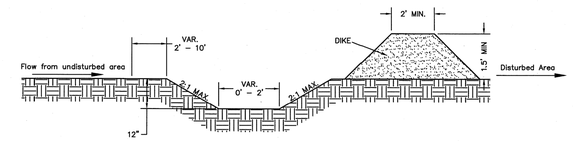

CROSS SECTIONAL VIEW

WAKE COUNTY NORTH CAROLINA

EFFECTIVE: 01/31/08

STANDARD CLEAN WATER DIVERSION

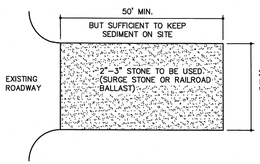

PLAN VIEW

NOTES:

1. PUT SILT FENCE OR TREE PROTECTION FENCE UP TO ENSURE CONSTRUCTION ENTRANCE IS USED.
2. IF CONSTRUCTION ON THE SITES ARE SUCH THAT THE MUD IS NOT REMOVED BY THE VEHICLE TRAVELING OVER THE STONE, THEN THE TIRES OF THE VEHICLES MUST BE WASHED BEFORE ENTERING THE PUBLIC ROAD.
3. MAINTAIN GRAVEL PAD IN A CONDITION TO PREVENT MUD OR SEDIMENT FROM LEAVING CONSTRUCTION SITE. ENTRANCE WILL REQUIRE PERIODIC REMOVAL OF SEDIMENT-LADEN STONE AND REPLACEMENT WITH FRESH STONE.

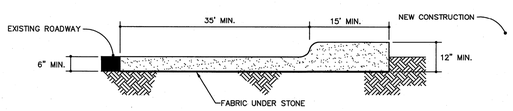

CROSS SECTION

WAKE COUNTY NORTH CAROLINA

EFFECTIVE: 01/31/08

STANDARD CONSTRUCTION ENTRANCE

NOTES:

1. TEMPORARY DIVERSION DITCH TO BE USED TO INTERCEPT FLOW AND/OR DIVERT TO A SEDIMENT CONTROL MEASURE OR BMP.
2. SILT SHALL BE REMOVED WHEN DITCH IS ONE-HALF FULL.
3. DITCH SHALL BE RECONSTRUCTED WHEN DAMAGED BY EQUIPMENT OR COVERED BY FILL.
4. STABILIZE DIVERSION DITCH BERM WITH TEMPORARY SEEDING, MULCH WITH TAC, AND/OR EROSION CONTROL NETTING.

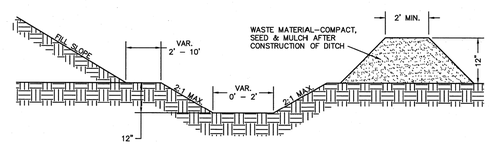

CROSS SECTIONAL VIEW

WAKE COUNTY NORTH CAROLINA

EFFECTIVE: 01/31/08

STANDARD TEMPORARY DIVERSION DITCH

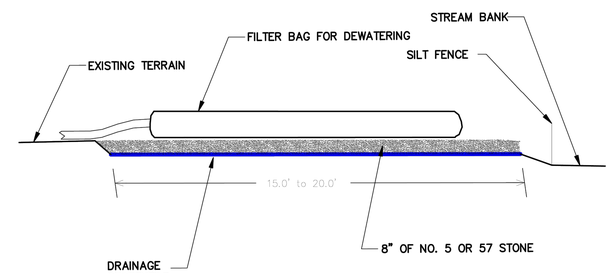

NOTES

PROVIDE STABILIZED OUTLET TO STREAM BANK. WOOD PALLETS MAY BE USED IN LIEU OF STONE AND GEOTEXTILE AS DIRECTED. A SUFFICIENT NUMBER OF PALLETS MUST BE PROVIDED TO ELEVATE THE ENTIRE FILTER BAG FOR DEWATERING ABOVE NATURAL GROUND.

NOT TO SCALE

WAKE COUNTY NORTH CAROLINA

EFFECTIVE: 01/31/08

STANDARD FILTER BAG FOR DEWATERING ACTIVITIES

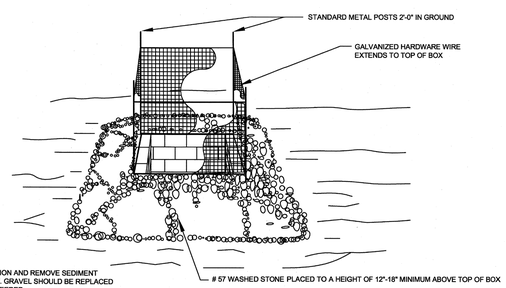

NOTE:

1. INSPECT INLET PROTECTION AND REMOVE SEDIMENT AFTER EACH RAIN EVENT. GRAVEL SHOULD BE REPLACED AND REPAIRS MADE AS NEEDED.

WAKE COUNTY NORTH CAROLINA

EFFECTIVE: 01/31/08

STANDARD GRAVEL YARD INLET PROTECTION

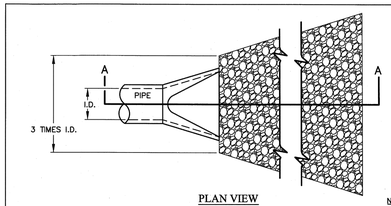

PLAN VIEW

NOTES:

1. L = THE LENGTH OF THE RIPRAP APRON.
2. d = 1.5 TIMES THE MAXIMUM STONE DIAMETER BUT NOT LESS THAN 6" (INCHES).
3. A FILTER BLANKET OR FILTER FABRIC SHOULD BE INSTALLED BETWEEN THE RIPRAP AND SOIL FOUNDATION.

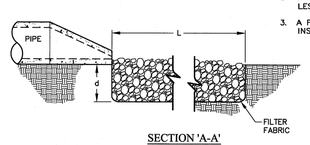

SECTION 'A-A'

WAKE COUNTY NORTH CAROLINA

EFFECTIVE: 01/31/08

STANDARD PIPE OUTLET TO FLAT AREA NO WELL-DEFINED CHANNEL

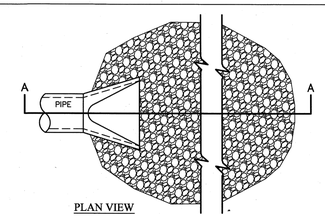

PLAN VIEW

NOTES:

1. L = THE LENGTH OF THE RIPRAP APRON.
2. d = 1.5 TIMES THE MAXIMUM STONE DIAMETER BUT NOT LESS THAN 6" (INCHES).
3. IN A WELL-DEFINED CHANNEL EXTEND THE APRON UP THE CHANNEL BANKS TO AN ELEVATION OF 6" (INCHES) ABOVE THE MAXIMUM TAILWATER DEPTH OR TO THE TOP OF THE BANK, WHICHEVER IS LESS.
4. A FILTER BLANKET OR FILTER FABRIC SHOULD BE INSTALLED BETWEEN THE RIPRAP AND SOIL FOUNDATION.

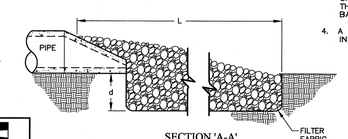

SECTION 'A-A'

WAKE COUNTY NORTH CAROLINA

EFFECTIVE: 01/31/08

STANDARD PIPE OUTLET TO WELL-DEFINED CHANNEL

Know what's below. Call before you dig.

REV	DATE	
	10/02/2023	PER TOWN OF ROLESVILLE COMMENT
	08/01/2023	PER TOWN OF ROLESVILLE COMMENT
	06/01/2023	INITIAL SUBMITTAL

DESIGNED BY: DF/CD
DRAWN BY: DF/JWM
REVIEWED BY: DF

BGE
5440 WADE PARK BLVD, SUITE 102
RALEIGH NC 27607
WWW.BGEINC.COM
NC LICENSE #C-4397

LENNAR CORPORTAION
1100 PERIMETER PARK DRIVE, SUITE 112
MORRISVILLE / NORTH CAROLINA / 27560

PARKER RIDGE
82 SCHOOL STREET
ROLESVILLE / NORTH CAROLINA / 27571

EROSION CONTROL DETAILS (1 OF 2)

NORTH CAROLINA PROFESSIONAL ENGINEER SEAL — DEBRA M. FERM — PRELIMINARY — NOT FOR CONSTRUCTION

FILE NUMBER: 8430-03
DATE: 10/02/2023
C8-3

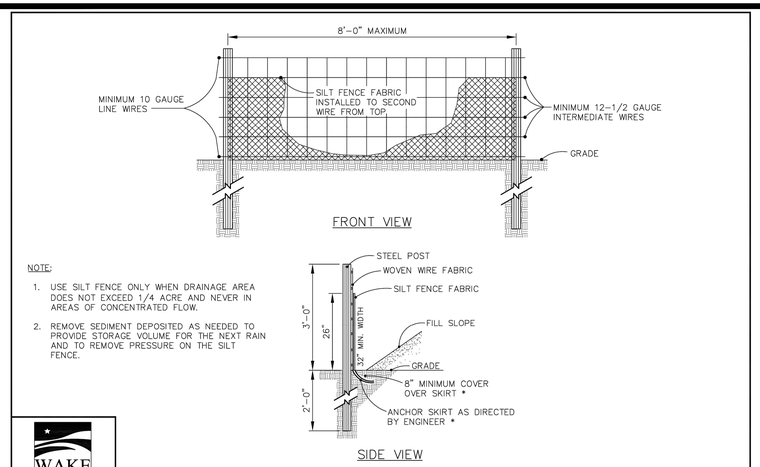

NOTE:

1. USE SILT FENCE ONLY WHEN DRAINAGE AREA DOES NOT EXCEED 1/4 ACRE AND NEVER IN AREAS OF CONCENTRATED FLOW.
2. REMOVE SEDIMENT DEPOSITED AS NEEDED TO PROVIDE STORAGE VOLUME FOR THE NEXT RAIN AND TO REMOVE PRESSURE ON THE SILT FENCE.

WAKE COUNTY NORTH CAROLINA

EFFECTIVE: 01/31/08

STANDARD TEMPORARY SILT FENCE

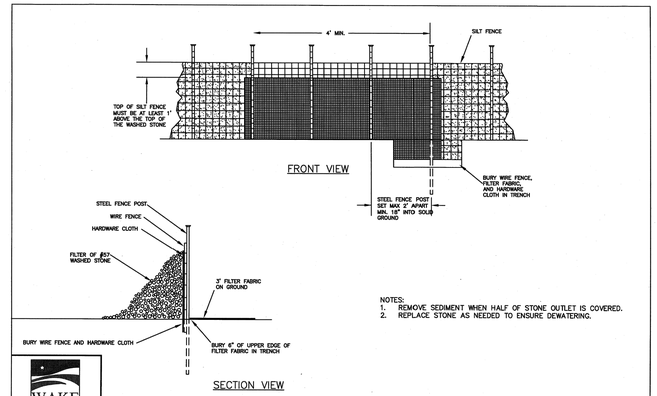

NOTES:
1. REMOVE SEDIMENT WHEN HALF OF STONE OUTLET IS COVERED.
2. REPLACE STONE AS NEEDED TO ENSURE DEWATERING.

WAKE COUNTY NORTH CAROLINA

EFFECTIVE: 01/31/08

STANDARD SILT FENCE OUTLET

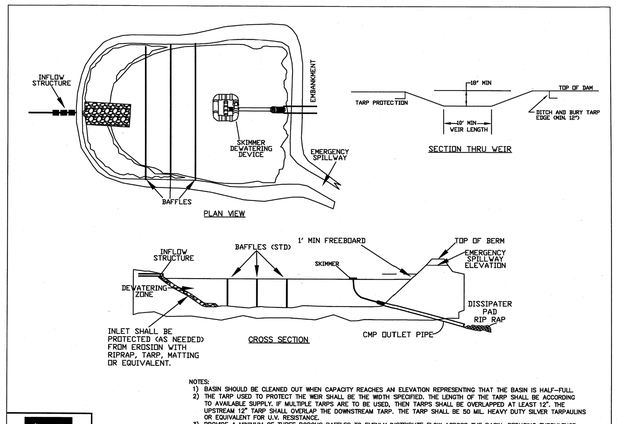

NOTES:
1) BASIN SHOULD BE CLEANED OUT WHEN CAPACITY REACHES AN ELEVATION REPRESENTING THAT THE BASIN IS HALF-FULL.
2) THE TARP USED TO PROTECT THE WEIR SHALL BE THE WIDTH SPECIFIED. THE LENGTH OF THE TARP SHALL BE ACCORDING TO AVAILABLE SUPPLY. IF MULTIPLE TARPS ARE TO BE USED, THEN TARPS SHALL BE OVERLAPPED AT LEAST 12". THE UPSTREAM 12" TARP SHALL OVERLAP THE DOWNSTREAM TARP. THE TARP SHALL BE 50 MIL. HEAVY DUTY SILVER TARP/AULINS OR EQUIVALENT FOR U.V. RESISTANCE.
3) PROVIDE A MINIMUM OF THREE POROUS BAFFLES TO EVENLY DISTRIBUTE FLOW ACROSS THE BASIN, REDUCING TURBULENCE.
4) BAFFLE MATERIAL MUST BE SECURED AT THE BOTTOM AND SIDES USING STAPLES OR BY TRENCHING AS FOR A SILT FENCE.
5) MOST OF THE SEDIMENT WILL ACCUMULATE IN THE FIRST BAY, SO THIS SHOULD BE READILY AVAILABLE FOR MAINTENANCE.
6) DURING THE CONSTRUCTION PHASE OF THE PROJECT, PERMANENT STORMWATER RISER SHALL ONLY DEWATER FROM THE TOP OF PIPE.
7) POND SHALL NOT BE CONVERTED FOR STORMWATER USE UNTIL APPROVED BY ENVIRONMENTAL ENGINEER.

WAKE COUNTY NORTH CAROLINA

EFFECTIVE: 01/31/08

STANDARD SKIMMER BASIN

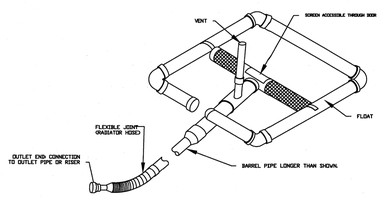

WAKE COUNTY NORTH CAROLINA

EFFECTIVE: 01/31/08

STANDARD SKIMMER DETAIL

NOTES:

1. CONSTRUCT THE ENTRANCE TO THE SLOPE DRAIN OF A STANDARD FLARED-END SECTION OF PIPE WITH A MINIMUM 6-INCH METAL TOE PLATE (CROSS-SECTION VIEW). MAKE ALL FITTINGS WATERTIGHT. A STANDARD T-SECTION FITTING MAY ALSO BE USED AT THE INLET.
2. USE AN EARTHEN DIVERSION TO DIRECT SURFACE RUNOFF INTO THE TEMPORARY SLOPE DRAIN. MAKE THE HEIGHT OF THE BERM OVER THE DRAIN CONDUIT A MINIMUM OF 1.5 FT AND AT LEAST 6 INCHES HIGHER THAN THE ADJOINING BERM ON EITHER SIDE. THE LOWEST POINT OF THE DIVERSION BERM SHOULD BE A MINIMUM OF 1 FT ABOVE THE TOP OF THE DRAIN SO THAT DESIGN FLOW CAN FREELY ENTER THE PIPE.
3. PROTECT THE OUTLET OF THE SLOPE DRAIN FROM EROSION WITH RIPRAP DISSIPATOR.

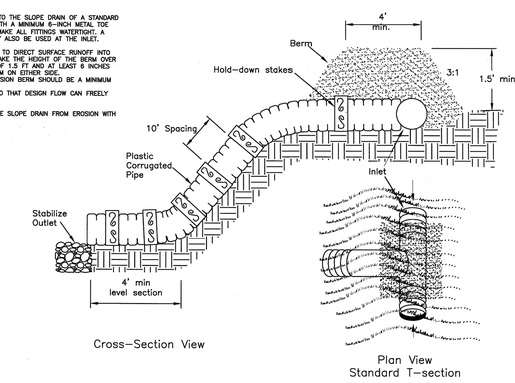

WAKE COUNTY NORTH CAROLINA

EFFECTIVE: 01/31/08

STANDARD TEMPORARY SLOPE DRAIN

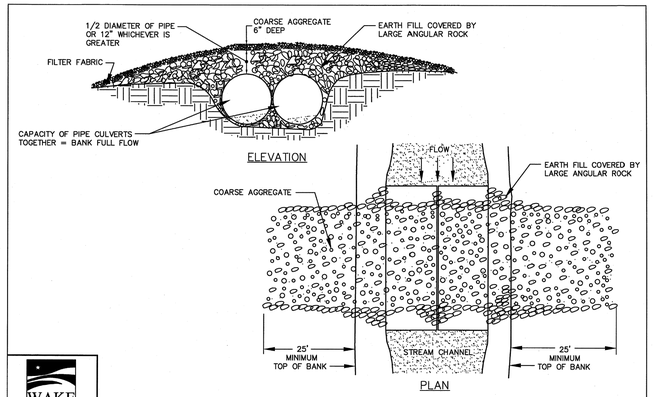

WAKE COUNTY NORTH CAROLINA

EFFECTIVE: 01/31/08

STANDARD TEMPORARY STREAM CROSSING

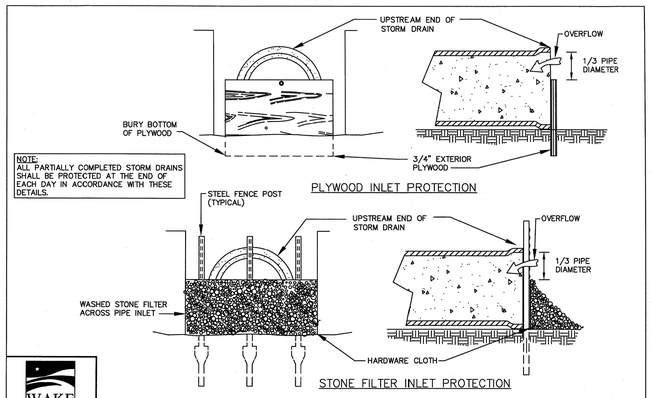

NOTE:
ALL PARTIALLY COMPLETED STORM DRAINS SHALL BE PROTECTED AT THE END OF EACH DAY IN ACCORDANCE WITH THESE DETAILS.

WAKE COUNTY NORTH CAROLINA

EFFECTIVE: 01/31/08

STANDARD PIPE INLET PROTECTION (PLYWOOD & STONE)

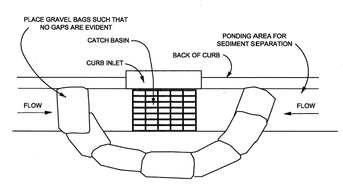

NOTES:

1. PLACE GRAVEL BAG BARRIER ON GENTLY SLOPING STREET, WHERE WATER CAN POND AND ALLOW SEDIMENT TO SEPARATE FROM RUNNOFF.
2. USE SAND BAGS OF WOVEN GEOTEXTILE FABRIC (NOT BURLAP) AND FILL WITH ¾ INCH (OR SMALLER) GRAVEL. BAGS MUST BE LAYERED SUCH THAT NO GAPS ARE EVIDENT.
3. INSPECT BARRIERS AND REMOVE SEDIMENT AFTER EACH STORM EVENT, SEDIMENT AND GRAVEL MUST BE REMOVED FROM THE TRAVELED WAY IMMEDIATELY.
4. WHEN INSTALLING CURB INLET PROTECTION DEVICES, **NEVER** BLOCK THE CURB INLET.

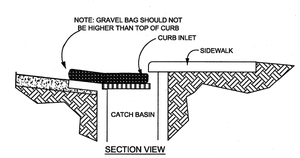

WAKE COUNTY NORTH CAROLINA

EFFECTIVE: 01/31/08

STANDARD GRAVEL BAG CURB INLET PROTECTION

Know what's below. Call before you dig.

REV				
6				
5				
4				
3	10/02/2023	PER TOWN OF ROLESVILLE COMMENT		
2	08/01/2023	PER TOWN OF ROLESVILLE COMMENT		
1	06/01/2023	INITIAL SUBMITTAL		

DESIGNED BY: DF/CD

DRAWN BY: DF/JWM

REVIEWED BY: DF

BGE
5440 WADE PARK BLVD, SUITE 102
RALEIGH NC 27607
WWW.BGEINC.COM
NC LICENSE #C-4397

LENNAR CORPORTAION
1100 PERIMETER PARK DRIVE, SUITE 112
MORRISVILLE / NORTH CAROLINA / 27560

PARKER RIDGE
82 SCHOOL STREET
ROLESVILLE / NORTH CAROLINA / 27571

EROSION CONTROL DETAILS (2 OF 2)

NORTH CAROLINA PROFESSIONAL ENGINEER SEAL — PRELIMINARY — DEBRA M. FERRIS

NOT FOR CONSTRUCTION

FILE NUMBER: 8430-03

DATE: 10/02/2023

C8-4

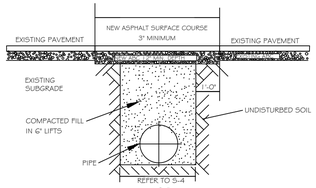

NOTES:
1. IN NCDOT MAINTAINED ROADWAYS ENCROACHMENT PAVEMENT PATCH REQUIREMENTS SHALL TAKE PRECEDENCE.
2. THE PAVEMENT CUT SHALL BE DEFINED BY A STRAIGHT EDGE AND CUT WITH AN APPROPRIATE SAWCUT MACHINE.
3. THE TRENCH SUBGRADE MATERIAL SHALL BE BACKFILLED WITH SUITABLE MATERIAL AND COMPACTED TO A DENSITY OF AT LEAST 95% OF THAT OBTAINED BY COMPACTING A SAMPLE OF THE MATERIAL IN ACCORDANCE WITH AASHTO T-99 AS MODIFIED BY NCDOT.
4. THE FINAL 1' OF FILL SHALL CONSIST OF ABC MATERIAL COMPACTED TO A DENSITY EQUAL TO 100% OF THAT OBTAINED BY COMPACTING A SAMPLE OF THE MATERIAL IN ACCORDANCE WITH AASHTO T-80 AS MODIFIED BY NCDOT.
5. THE ENTIRE THICKNESS AND VERTICAL EDGE OF CUT SHALL BE TACKED.
6. THE SAME DEPTH OF PAVEMENT MATERIAL WHICH EXISTS SHALL BE REINSTALLED, BUT IN NO CASE SHALL THE ASPHALT BE LESS THAN 3" THICK.
7. THE ASPHALT PAVEMENT MATERIAL SHALL BE INSTALLED AND COMPACTED THOROUGHLY WITH A SMOOTH DRUM ROLLER TO ACHIEVE A SMOOTH LEVEL PATCH.
8. REFER TO CITY OF RALEIGH STANDARDS FOR TRENCHES AND PIPE BEDDING (S-4 & S-5) FOR ADDED TRAIL DETAILS.
9. NO HAND PATCHING ALLOWED.
10. PAVEMENT CUTS WITHIN NCDOT ROW SHALL CONFORM TO THE APPROVED ON SITE ENCROACHMENT PERMIT.

CITY OF RALEIGH
DEPARTMENT OF PUBLIC UTILITIES
STANDARD ASPHALT PAVEMENT PATCH DETAIL

DWG. NO.	REVISIONS	DATE	REVISIONS	DATE
S-3	D.W.C.	1-1-99	A.B.B.	4-19-04
	RRH	3-30-00	J.P.S.	10-5-10

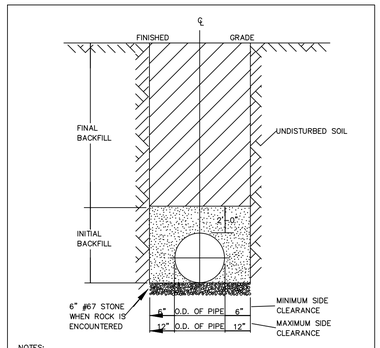

NOTES:
1. TRENCHES REQUIRING SHORING AND BRACING, DIMENSIONS SHALL BE TAKEN FROM THE INSIDE FACE OF THE SHORING AND BRACING.
2. NO ROCKS OR BOULDERS 4" OR LARGER TO BE USED IN INITIAL BACKFILL.
3. ALL BACKFILL MATERIAL SHALL BE SUITABLE NATIVE MATERIAL.
4. BACKFILL SHALL BE TAMPED IN 6" LIFTS IN TRAFFIC AREAS, 12" IN NON-TRAFFIC AREAS.
5. ACHIEVE 80% COMPACTION IN NON-TRAFFIC AREAS, AND 95% COMPACTION IN TRAFFIC AREAS.
6. IF IN EASEMENT 4" TOPSOIL, AND 12" CLEAN SELECT FILL MAY BE REQUIRED.
7. NO BOULDERS 8" IN DIAMETER OR GREATER ALLOWED IN FINAL BACKFILL.

CITY OF RALEIGH
DEPARTMENT OF PUBLIC UTILITIES
TRENCH BOTTOM DIMENSIONS & BACKFILLING REQUIREMENTS FOR DUCTILE IRON

DWG. NO.	REVISIONS	DATE	REVISIONS	DATE
S-4	D.W.C.	9-3-99		
	RRH	3-30-00		

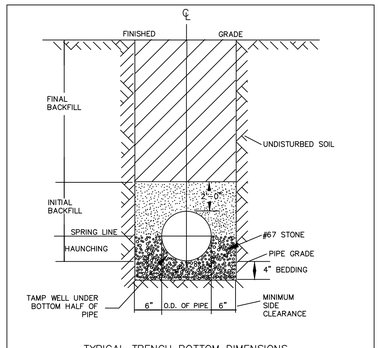

TYPICAL TRENCH BOTTOM DIMENSIONS FOR SDR 35 PVC GRAVITY PIPE

NOTES:
1. FOR TRENCHES REQUIRING SHORING AND BRACING, DIMENSIONS SHALL BE TAKEN FROM THE INSIDE FACE OF THE SHORING AND BRACING.
2. NO ROCKS OR BOULDERS 4" OR LARGER TO BE USED IN INITIAL BACKFILL.
3. ALL BACKFILL MATERIAL SHALL BE SUITABLE NATIVE MATERIAL.
4. BACKFILL SHALL BE TAMPED IN 6" LIFTS IN TRAFFIC AREAS, 12" IN NON-TRAFFIC AREAS.

CITY OF RALEIGH
DEPARTMENT OF PUBLIC UTILITIES
TRENCH BOTTOM DIMENSIONS AND BACKFILLING REQUIREMENTS FOR PVC GRAVITY SEWER MAIN

DWG. NO.	REVISIONS TO NOTES	DATE	REVISIONS	DATE
S-5		3-1-87	D.W.C.	9-3-99
		7-2-82	RRH	3-30-00

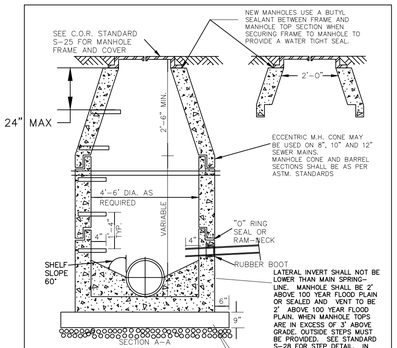

CITY OF RALEIGH
DEPARTMENT OF PUBLIC UTILITIES
STANDARD PRECAST SANITARY SEWER MANHOLE

DWG. NO.	REVISIONS	DATE	REVISIONS	DATE
S-20	Y.C.A.	12-31-90	ABB	2-21-05
	RRH	3-30-00	D.H.L.	6-16-08

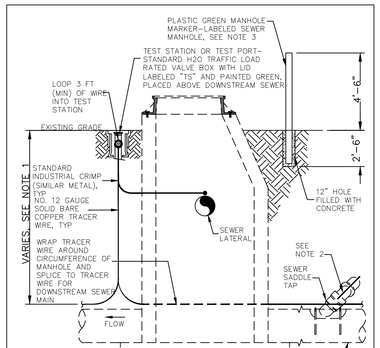

NOTES:
1. THE TRACER WIRE SHALL BE CONTINUOUS TO THE GREATEST EXTENT POSSIBLE. FOR GRAVITY MAIN AND OR LATERAL INSTALLATIONS LESS THAN 8 FT, THE TRACING WIRE SHALL BE ATTACHED TO THE PIPE. TRACER WIRE SHALL BE LAID FLAT AND SECURELY AFFIXED TO THE PIPE AT 10 FOOT INTERVALS. FOR GRAVITY MAIN AND OR LATERAL INSTALLATION DEEPER THAN 8 FT, THE TRACING WIRE SHALL BE INSTALLED AT A DEPTH OF 7-8 FT. THE WIRE SHALL BE PROTECTED FROM DAMAGE DURING THE EXECUTION OF THE WORK. NO BREAKS OF CUTS IN THE TRACER WIRE SHALL BE PERMITTED.
2. WHERE LATERAL TAPS ARE MADE BY SERVICE SADDLES, THE TRACER WIRE SHALL NOT BE ALLOWED TO TO BE PLACED BETWEEN THE SADDLE AND MAIN.
3. MANHOLE MARKERS SHALL BE PLACED ADJACENT TO MANHOLES AT THE DISCRETION OF OWNER OR OWNER'S REPRESENTATIVE

CITY OF RALEIGH
DEPARTMENT OF PUBLIC UTILITIES
GRAVITY SEWER MAIN TRACER WIRE AND MANHOLE MARKER

DWG. NO.	REVISIONS	DATE	REVISIONS	DATE
S-20A	WKD	09-14		

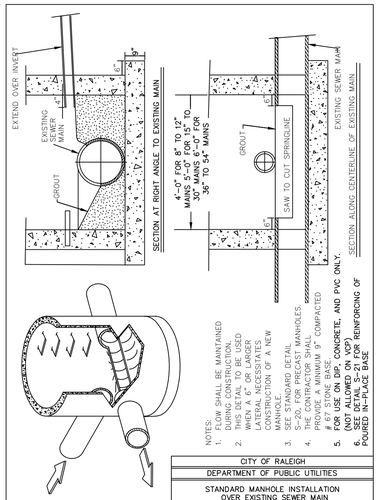

CITY OF RALEIGH
DEPARTMENT OF PUBLIC UTILITIES
STANDARD MANHOLE INSTALLATION OVER EXISTING SEWER MAIN

DWG. NO.	REVISIONS	DATE	REVISIONS	DATE
S-22	Y.C.A.	12-31-91	A.B.B.	1-19-05
	RRH	3-30-00	D.H.L.	6/16/08

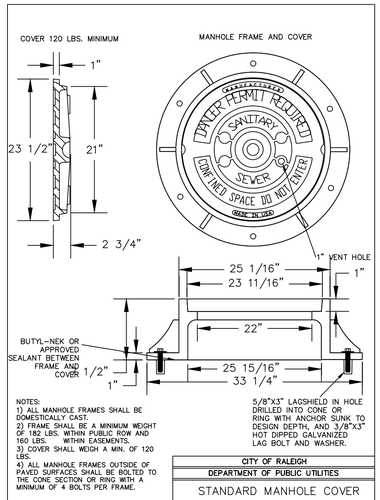

NOTES:
1) ALL MANHOLE FRAMES SHALL BE DOMESTICALLY CAST.
2) FRAME SHALL BE A MINIMUM WEIGHT OF 182 LBS. WITHIN PUBLIC ROW AND 160 LBS. WITHIN EASEMENTS.
3) COVER SHALL WEIGH A MIN. OF 120 LBS.
4) ALL MANHOLE FRAMES OUTSIDE OF PAVED SURFACES SHALL BE BOLTED TO THE CONE SECTION OR RING WITH A MINIMUM OF 4 BOLTS PER FRAME.

5/8"X3" LAGSHIELD IN HOLE DRILLED INTO CONE OR RING WITH ANCHOR SUNK TO DESIGN DEPTH, AND 3/8"X3" HOT DIPPED GALVANIZED LAG BOLT AND WASHER.

CITY OF RALEIGH
DEPARTMENT OF PUBLIC UTILITIES
STANDARD MANHOLE COVER

DWG. NO.	REVISIONS	DATE	REVISIONS	DATE
S-25		3-1-87	A.B.B.	2-9-05
	RRH	3-30-00	D.H.L.	6-18-08

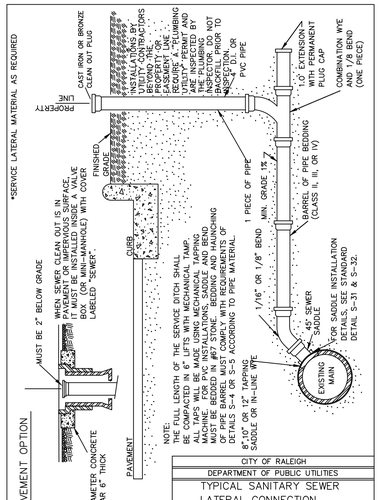

NOTE:
THE FULL LENGTH OF THE SERVICE DITCH SHALL BE COMPACTED IN 6" LIFTS WITH MECHANICAL TAMP MACHINE. FOR PVC INSTALLATIONS, SADDLE MUST BE BEDDED IN #67 STONE, BEDDING AND HAUNCHING MUST BE PER PIPE MANUFACTURER DETAILS S-4 OR S-5 ACCORDING TO PIPE MATERIAL.

CITY OF RALEIGH
DEPARTMENT OF PUBLIC UTILITIES
TYPICAL SANITARY SEWER LATERAL CONNECTION

DWG. NO.	REVISIONS	DATE	REVISIONS	DATE
S-30	Y.C.A.	6-92	A.B.B.	4-6-04
	RRH	3-30-00	D.H.L.	6-18-08

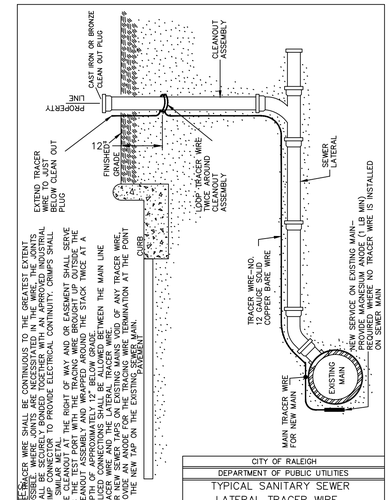

NOTES:
1. TRACER WIRE SHALL BE CONTINUOUS TO THE GREATEST EXTENT POSSIBLE. WIRE JOINTS ARE CONSIDERATED IN THE WIRE. WIRE SHALL BE SECURELY BONDED TOGETHER WITH AN APPROVED INDUSTRIAL CRIMP CONNECTOR. THE CONTINUITY OF THE WIRE SHALL BE SIMILAR METAL.
2. THE TRACER WIRE SHALL BE BROUGHT UP OUTSIDE THE CLEANOUT ASSEMBLY AND WRAPPED AROUND THE STACK AT THE TEST PORT WITH THE TRACING WIRE BROUGHT UP AT THE TEST PORT WITH THE TRACING WIRE BROUGHT UP CLEANOUT ASSEMBLY AND WRAPPED AROUND THE STACK TWICE AT A MINIMUM SIZE OF #12 AWG SOLID COPPER WIRE.
3. SPLICED CONNECTIONS SHALL BE ALLOWED BETWEEN THE TRACER WIRE ON EXISTING MAIN AND NEW MAIN.
4. FOR DIP, PVC, OR EXISTING CLAY MAIN, PROVIDE AN ANODE FOR THE TRACING WIRE. TERMINATION OF THE WIRE SHALL BE PROVIDED AT THE NEW TWP ON THE EXISTING MAIN.

CITY OF RALEIGH
DEPARTMENT OF PUBLIC UTILITIES
TYPICAL SANITARY SEWER LATERAL TRACER WIRE

DWG. NO.	REVISIONS	DATE	REVISIONS	DATE
S-30A	WKD	9-14		

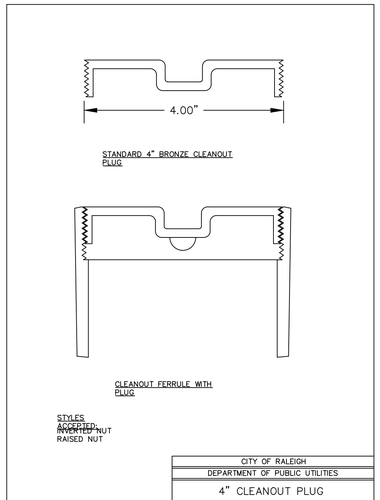

CITY OF RALEIGH
DEPARTMENT OF PUBLIC UTILITIES
4" CLEANOUT PLUG

DWG. NO.	REVISIONS	DATE	REVISIONS	DATE
S-34	D.W.C.	3-27-98	RRH	3-30-00

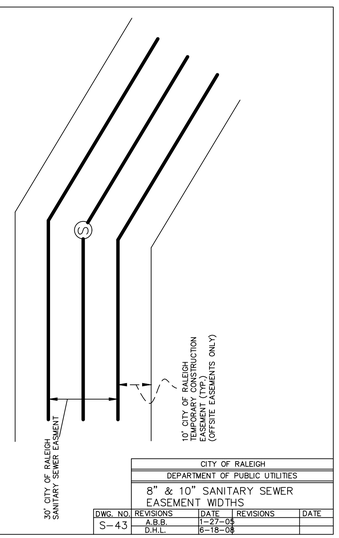

CITY OF RALEIGH
DEPARTMENT OF PUBLIC UTILITIES
8" & 10" SANITARY SEWER EASEMENT WIDTHS

DWG. NO.	REVISIONS	DATE	REVISIONS	DATE
S-43	A.B.B.	1-27-03		
	D.H.L.	6-18-08		

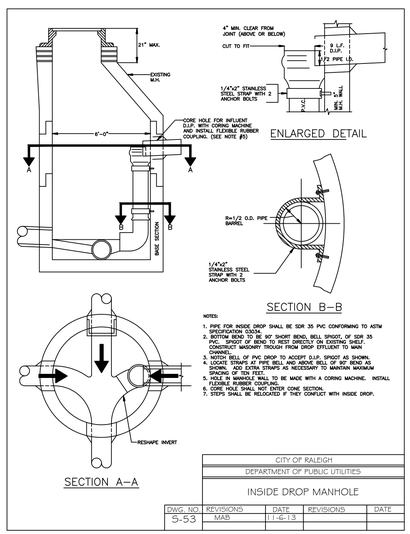

NOTES:
1. PIPE FOR INSIDE DROP SHALL BE SDR 35 PVC CONFORMING TO ASTM SPECIFICATION D3034.
2. BOTTOM BEND TO BE 90° SHORT BEND, BELL SPIGOT, OF SDR 35 PVC. SPIGOT OF BEND TO REST DIRECTLY ON EXISTING SHELF. CONSTRUCT MASONRY TROUGH FROM DROP EFFLUENT TO MAIN CHANNEL.
3. NOTCH BELL OF PVC DROP TO ACCEPT D.I.P. SPIGOT AS SHOWN. PROVIDE 1/4"x2" STAINLESS STEEL STRAPS WITH 2 ANCHOR BOLTS AS SHOWN. ADD EXTRA STRAPS AS NECESSARY TO MAINTAIN MAXIMUM SPACING OF TEN FEET.
4. HOLE IN MANHOLE WALL TO BE MADE WITH A CORING MACHINE. INSTALL FLEXIBLE RUBBER COUPLING.
5. DROP PIPE SHALL NOT ENTER CONE SECTION.
6. STEPS SHALL BE RELOCATED IF THEY CONFLICT WITH INSIDE DROP.

CITY OF RALEIGH
DEPARTMENT OF PUBLIC UTILITIES
INSIDE DROP MANHOLE

DWG. NO.	REVISIONS	DATE	REVISIONS	DATE
S-53	MAB	1-6-13		

GC4276

ANTI-SEEP COLLAR

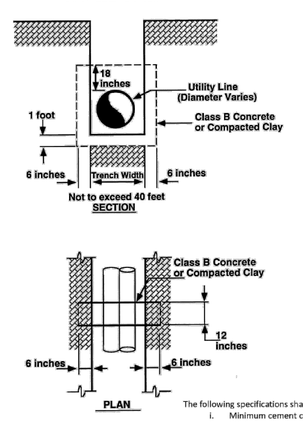

The following specifications shall apply to class B concrete:
- i. Minimum cement content, sacks per cubic yard with rounded coarse aggregate 5.0
- ii. Minimum cement content, sacks per cubic yard with angular coarse aggregate 5.5
- iii. Maximum water-cement ratio gallons per sack 6.8
- iv. Slump range 2" to 4"
- v. Minimum strength - 28-day psi 2,500

Page 16 of 16

Know what's below. Call before you dig.

REV	DATE	DESCRIPTION
4	10/02/2023	PER TOWN OF ROLESVILLE COMMENT
3	08/01/2023	PER TOWN OF ROLESVILLE COMMENT
1	06/01/2023	INITIAL SUBMITTAL

DESIGNED BY: DF/CD
DRAWN BY: DF/JWM
REVIEWED BY: DF

BGE
5440 WADE PARK BLVD, SUITE 102
RALEIGH NC 27607
WWW.BGENC.COM
NC LICENSE #C-4397

LENNAR CORPORTAION
1100 PERIMETER PARK DRIVE, SUITE 112
MORRISVILLE / NORTH CAROLINA / 27560

PARKER RIDGE
82 SCHOOL STREET
ROLESVILLE / NORTH CAROLINA / 27571

SEWER DETAIL

NORTH CAROLINA PROFESSIONAL ENGINEER SEAL — PRELIMINARY — DEBRA M. FERRELL
NOT FOR CONSTRUCTION

FILE NUMBER: 8430-03
DATE: 10/02/2023

C8-5

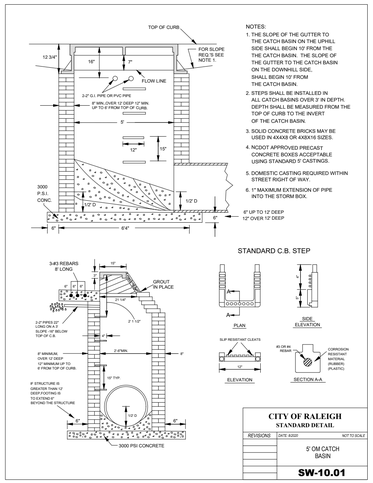

NOTES:
1. THE SLOPE OF THE GUTTER TO THE CATCH BASIN ON THE UPHILL SIDE SHALL BEGIN 10' FROM THE THE CATCH BASIN. THE SLOPE OF THE GUTTER TO THE CATCH BASIN ON THE DOWNHILL SIDE, SHALL BEGIN 10' FROM THE CATCH BASIN.
2. STEPS SHALL BE INSTALLED IN ALL CATCH BASINS OVER 3' IN DEPTH. DEPTH SHALL BE MEASURED FROM THE TOP OF CURB TO THE INVERT OF THE CATCH BASIN.
3. SOLID CONCRETE BRICKS MAY BE USED IN 4X4X8 OR 4X8X16 SIZES.
4. NCDOT APPROVED PRECAST CONCRETE BOXES ACCEPTABLE USING STANDARD 5' CASTINGS.
5. DOMESTIC CASTING REQUIRED WITHIN STREET RIGHT OF WAY.
6. 1" MAXIMUM EXTENSION OF PIPE INTO THE STORM BOX.

STANDARD C.B. STEP

CITY OF RALEIGH
STANDARD DETAIL

REVISIONS	DATE 6/2022	NOT TO SCALE
	5' OM CATCH BASIN	
	SW-10.01	

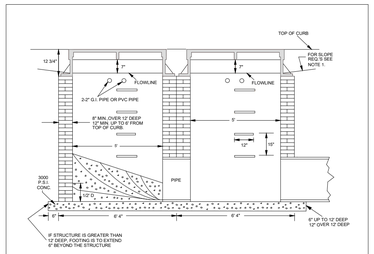

NOTES:
1. THE SLOPE OF THE GUTTER TO THE CATCH BASIN ON THE UPHILL SIDE SHALL BEGIN 10' FROM THE CATCH BASIN. THE SLOPE OF THE GUTTER TO THE CATCH BASIN ON THE DOWNHILL SIDE , SHALL BEGIN 10' FROM THE CATCH BASIN.
2. STEPS SHALL BE INSTALLED IN ALL CATCH BASINS OVER 3' IN DEPTH. DEPTH SHALL BE MEASURED FROM THE TOP OF CURB TO THE INVERT OF THE CATCH BASIN.
3. SOLID CONCRETE BRICKS MAY BE USED IN 4" X 4" X 8" OR 4" X 8" X 16" SIZES.
4. NCDOT APPROVED PRECAST CONCRETE BOXES ACCEPTABLE. USING STANDARD 5' CASTINGS.
5. DOMESTIC CASTING REQUIRED WITHIN STREET RIGHT OF WAY.

CITY OF RALEIGH
STANDARD DETAIL

REVISIONS	DATE 6/2022	NOT TO SCALE
	DOUBLE WIDTH CATCH BASIN	
	SW-10.02	

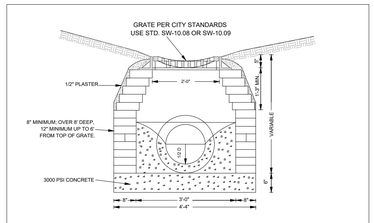

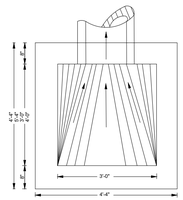

NOTES:
1. FOR 24" RCP & LARGER USE PIPE DIAMETER PLUS 12" FOR MINIMUM INSIDE DIMENSION.
2. 24" X 24" CASTING WITH 12", 15" & 18" PIPE, 24" X 36" CASTING USED WITH 24" PIPE OR LARGER. IF PLACED WITHIN PUBLIC R/W CASTING MUST BE TRAFFIC BEARING TYPE PER NCDOT STANDARDS.
3. USE 4" X 4" X 8" OR 4" X 8" X 16" SOLID CONCRETE BLOCK. CAST IN PLACE OR PRECAST CONCRETE TO MEET N.C.D.O.T. STANDARDS ACCEPTABLE.
4. STEPS SHALL BE INSTALLED IN ALL DROP INLETS OVER 3' IN DEPTH. DEPTH SHALL BE MEASURED FROM THE TOP OF GRATE TO THE INVERT OF THE DROP INLET.

CITY OF RALEIGH
STANDARD DETAIL

REVISIONS	DATE 6/2022	NOT TO SCALE
	STANDARD DROP INLET	
	SW-10.03	

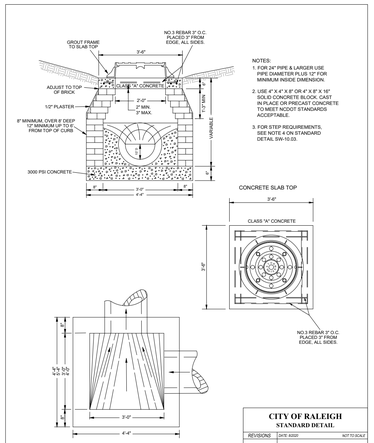

NOTES:
1. FOR 24" PIPE & LARGER USE PIPE DIAMETER PLUS 12" FOR MINIMUM INSIDE DIMENSION.
2. USE 4" X 4" X 8" OR 4" X 8" X 16" SOLID CONCRETE BLOCK. CAST IN PLACE OR PRECAST CONCRETE TO MEET NCDOT STANDARDS ACCEPTABLE.
3. FOR STEP REQUIREMENTS SEE NOTE 4 ON STANDARD DETAIL SW-10.03.

CITY OF RALEIGH
STANDARD DETAIL

REVISIONS	DATE 6/2022	NOT TO SCALE
	STANDARD JUNCTION BOX	
	SW-10.04	

TYPICAL MH FOR STORM SEWER

PIPE SIZE	MH DIAMETER
12-24"	4'-0"
30-42"	5'-0"
48"	6'-0"
54"	8'-0"

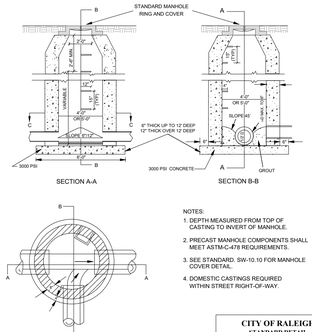

TYPE A
SECTION C-C

NOTES:
1. DEPTH MEASURED FROM TOP OF CASTING TO INVERT OF MANHOLE.
2. PRECAST MANHOLE COMPONENTS SHALL MEET ASTM-C-478 REQUIREMENTS.
3. SEE STANDARD. SW-10.10 FOR MANHOLE COVER DETAIL.
4. DOMESTIC CASTINGS REQUIRED WITHIN STREET RIGHT-OF-WAY.

CITY OF RALEIGH
STANDARD DETAIL

REVISIONS	DATE 6/2022	NOT TO SCALE
	STANDARD CLASS "A" MANHOLE	
	SW-10.05	

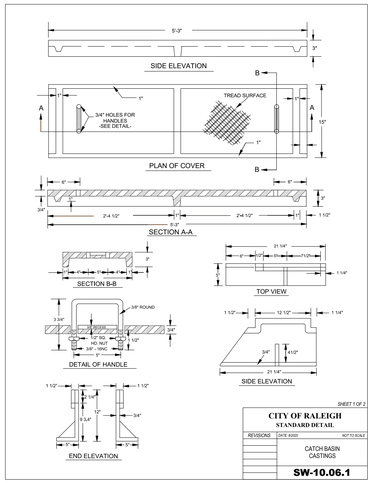

CITY OF RALEIGH
STANDARD DETAIL

REVISIONS	DATE 6/2022	NOT TO SCALE
	CATCH BASIN CASTINGS	
	SW-10.06.1	

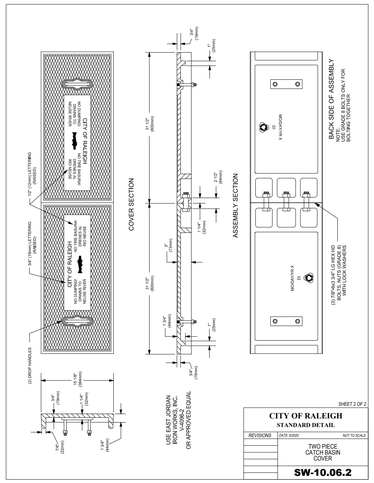

SHEET 1 OF 2
SHEET 2 OF 2

CITY OF RALEIGH
STANDARD DETAIL

REVISIONS	DATE 6/2022	NOT TO SCALE
	TWO PIECE CATCH BASIN COVER	
	SW-10.06.2	

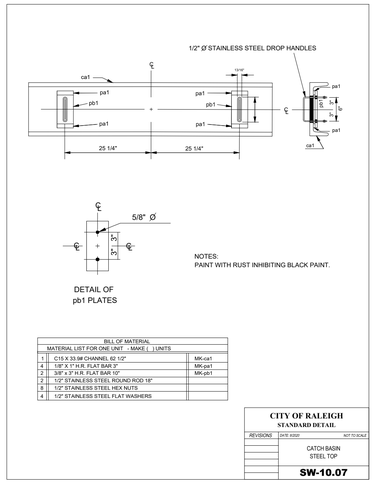

NOTES:
PAINT WITH RUST INHIBITING BLACK PAINT.

BILL OF MATERIAL

MATERIAL LIST FOR ONE UNIT - MAKE ( ) UNITS		
1	C15 X 33.9# CHANNEL 62 1/2"	MK-ca1
4	1/8" X 1" H.R. FLAT BAR 2"	MK-pa1
2	3/8" x 3" H.R. FLAT BAR 10"	MK-pb1
2	1/2" STAINLESS STEEL ROUND ROD 18"	
8	1/2" STAINLESS STEEL HEX NUTS	
4	1/2" STAINLESS STEEL FLAT WASHERS	

CITY OF RALEIGH
STANDARD DETAIL

REVISIONS	DATE 6/2022	NOT TO SCALE
	CATCH BASIN STEEL TOP	
	SW-10.07	

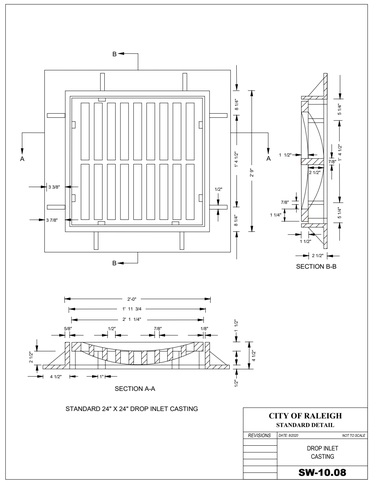

STANDARD 24" X 24" DROP INLET CASTING

CITY OF RALEIGH
STANDARD DETAIL

REVISIONS	DATE 6/2022	NOT TO SCALE
	DROP INLET CASTING	
	SW-10.08	

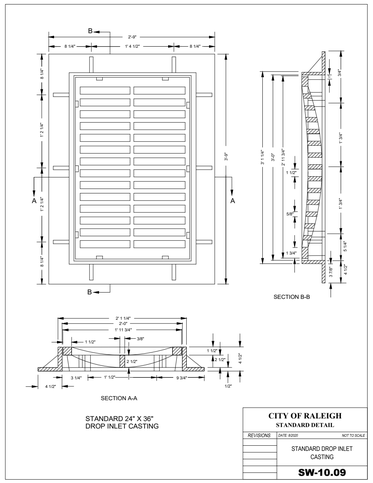

STANDARD 24" X 36" DROP INLET CASTING

CITY OF RALEIGH
STANDARD DETAIL

REVISIONS	DATE 6/2022	NOT TO SCALE
	STANDARD DROP INLET CASTING	
	SW-10.09	

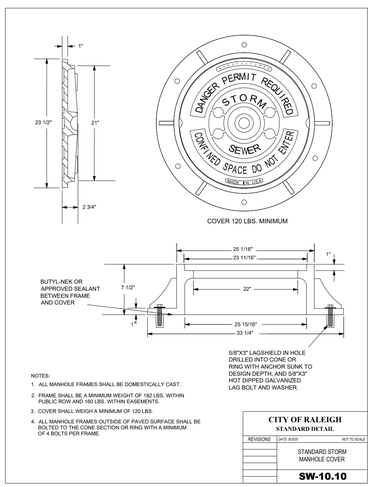

NOTES:
1. ALL MANHOLE FRAMES SHALL BE DOMESTICALLY CAST.
2. FRAME SHALL BE A MINIMUM WEIGHT OF 1521LBS. WITHIN PUBLIC ROW AND 160 LBS. WITHIN EASEMENTS.
3. COVER SHALL WEIGH A MINIMUM OF 120 LBS.
4. ALL MANHOLE FRAMES OUTSIDE OF PAVED SURFACE SHALL BE BOLTED TO THE CONE SECTION OR RING WITH A MINIMUM OF 4 BOLTS PER FRAME.

CITY OF RALEIGH
STANDARD DETAIL

REVISIONS	DATE 6/2022	NOT TO SCALE
	STANDARD STORM MANHOLE COVER	
	SW-10.10	

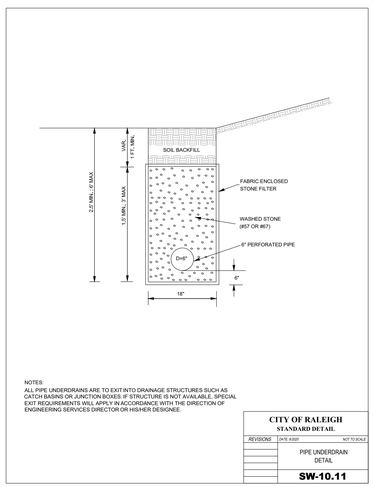

NOTES:
ALL PIPE UNDERDRAINS ARE TO EXIT INTO DRAINAGE STRUCTURES SUCH AS CATCH BASINS OR JUNCTION BOXES. IF STRUCTURE IS NOT AVAILABLE, SPECIAL EXIT REQUIREMENTS WILL APPLY IN ACCORDANCE WITH THE DIRECTION OF ENGINEERING SERVICES DIRECTOR OR HIS/HER DESIGNEE.

CITY OF RALEIGH
STANDARD DETAIL

REVISIONS	DATE 6/2022	NOT TO SCALE
	PIPE UNDERDRAIN DETAIL	
	SW-10.11	

GRATE: USE EAST JORDAN IRON WORKS V-4530-02 OR APPROVED EQUAL FOR VALLEY CURB. USE USF 5120 FRAME AND 6167 GRATE OR APPROVED EQUAL FOR STANDARD CURB. FRAME AND GRATE PLACEMENT WILL VARY DEPENDING UPON TYPE USED.

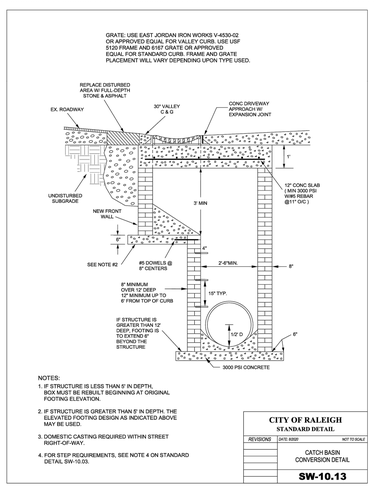

NOTES:
1. IF STRUCTURE IS LESS THAN 5' IN DEPTH, BOX MUST BE REBUILT BEGINNING AT ORIGINAL FOOTING ELEVATION.
2. IF STRUCTURE IS GREATER THAN 5' IN DEPTH, THE ELEVATED FOOTING DESIGN AS INDICATED ABOVE MAY BE USED.
3. DOMESTIC CASTING REQUIRED WITHIN STREET RIGHT-OF-WAY.
4. FOR STEP REQUIREMENTS, SEE NOTE 4 ON STANDARD DETAIL SW-10.03.

CITY OF RALEIGH
STANDARD DETAIL

REVISIONS	DATE 6/2022	NOT TO SCALE
	CATCH BASIN CONVERSION DETAIL	
	SW-10.13	

COVER FOR PIPES WITHIN THE R.O.W. MINIMUM PIPE CLEARANCE FROM INVERT TO SUBGRADE

PIPE SIZE (in)	CLEARANCE DISTANCE (ft)
15	2.4
18	2.7
24	3.3
30	3.8
36	4.4
42	4.9
48	5.4
54	6.0
60	6.5
66	7.0
72	7.5

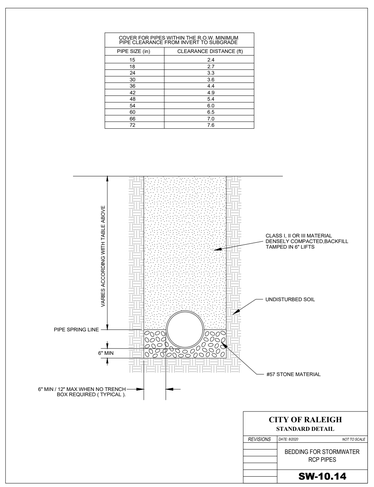

CITY OF RALEIGH
STANDARD DETAIL

REVISIONS	DATE 6/2022	NOT TO SCALE
	BEDDING FOR STORMWATER RCP PIPES	
	SW-10.14	

REV	REVISIONS	DATE
1	PER TOWN OF ROLESVILLE COMMENT	10/02/2023
2	PER TOWN OF ROLESVILLE COMMENT	08/01/2023
3	INITIAL SUBMITTAL	06/01/2023

DESIGNED BY: DF/CD
DRAWN BY: DF/JWM
REVIEWED BY: DF

BGE
5440 WADE PARK BLVD, SUITE 102
RALEIGH NC 27607
WWW.BGEINC.COM
NC LICENSE #C-4397

LENNAR CORPORATAION
1100 PERIMETER PARK DRIVE, SUITE 112
MORRISVILLE / NORTH CAROLINA / 27560

PARKER RIDGE
82 SCHOOL STREET
ROLESVILLE / NORTH CAROLINA / 27571

STORM-DETAIL

NORTH CAROLINA PROFESSIONAL ENGINEER SEAL DEBRA M. FERM
PRELIMINARY
NOT FOR CONSTRUCTION

FILE NUMBER: 8430-03
DATE: 10/02/2023
C8-6

811 Know what's below. Call before you dig.

\\brownjay.net\panzura\Regions\NCA\Projects\Lennar\8430-03 - Lennar - School Street - Rolesville\03 - DWG\PlanSheets\On-Site\C8-5 - STORM-DETAIL.dwg Layout: C8-6 STORM-DETAIL Plotted: 10/2/2023 4:07:18 PM

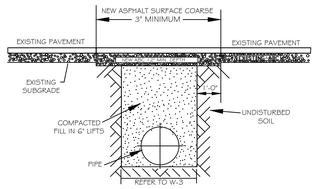

NOTES:
1. THE PAVEMENT CUT SHALL BE DEFINED BY A STRAIGHT EDGE AND CUT WITH AN APPROPRIATE SAW CUT MACHINE.
2. THE TRENCH SUBGRADE MATERIAL SHALL BE BACKFILLED WITH SUITABLE MATERIAL AND COMPACTED TO A DENSITY OF AT LEAST 95% OF THAT OBTAINED BY COMPACTING A SAMPLE OF THE MATERIAL IN ACCORDANCE WITH AASHTO T-99 AS MODIFIED BY NCDOT.
3. THE FINAL 1' OF FILL SHALL CONSIST OF ABC MATERIAL COMPACTED TO A DENSITY EQUAL TO 100% OF THAT OBTAINED BY COMPACTING A SAMPLE OF THE MATERIAL IN ACCORDANCE WITH AASHTO T-180 AS MODIFIED BY NCDOT.
4. THE ENTIRE THICKNESS/ VERTICAL EDGE OF CUT SHALL BE TACKED.
5. THE SAME DEPTH OF PAVEMENT MATERIAL WHICH EXISTS SHALL BE REINSTALLED, BUT IN NO CASE SHALL THE ASPHALT BE LESS THAN 3" THICK.
6. THE ASPHALT PAVEMENT MATERIAL SHALL BE INSTALLED AND COMPACTED THOROUGHLY WITH A SMOOTH DRUM ROLLER TO ACHIEVE A SMOOTH LEVEL PATCH.
7. REFER TO CITY OF RALEIGH STANDARDS FOR TRENCHES AND PIPE BEDDING, W-3, FOR ADDITIONAL DETAILS.
8. NO HAND PATCHING ALLOWED.
9. PAVEMENT CUTS WITHIN NCDOT ROW SHALL CONFORM TO THE APPROVED ON SITE ENCROACHMENT PERMIT.

CITY OF RALEIGH
DEPARTMENT OF PUBLIC UTILITIES
STANDARD ASPHALT PAVEMENT PATCH DETAIL

DWG. NO.	REVISIONS	DATE	REVISIONS	DATE
W-2	RRH	3-31-00	A.D.S.	4-12-04
	D.W.C.	1-1-99	J.P.S.	10-29-10

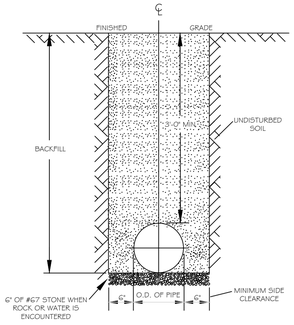

NOTES:
1. TRENCHES REQUIRING SHORING AND BRACING, DIMENSIONS SHALL BE TAKEN FROM THE INSIDE FACE OF THE SHORING AND BRACING.
2. NO ROCKS OR BOULDERS 4" OR LARGER TO BE USED IN BACKFILL.
3. ALL BACKFILL MATERIAL SHALL BE SUITABLE NATIVE MATERIAL.
4. BACKFILL SHALL BE TAMPED IN 6" LIFTS.
5. ACHIEVE 95% COMPACTION IN BACKFILL.

CITY OF RALEIGH
DEPARTMENT OF PUBLIC UTILITIES
TRENCH BOTTOM DIMENSIONS & BACKFILLING REQUIREMENTS FOR DUCTILE IRON

DWG. NO.	REVISIONS	DATE	REVISIONS	DATE
W-3	D.W.C.	9-3-99	ABB	2-15-05
	RRH	3-31-00	J.P.S.	10-29-10

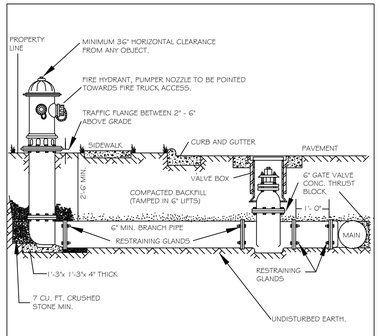

NOTES:
1. FIRE HYDRANT SHALL BE AS MANUFACTURED: MUELLER, AMERICAN DARLING, KENNEDY, MIH, WATEROUS, CLOW, EAST JORDAN IRON WORKS, OR US PIPE.
2. BRANCH PIPE SHALL BE DUCTILE IRON AWWA C150-96
3. 6" GATE VALVE SHALL BE AWWA C500-96 OPEN LEFT
4. STEEL RODS AND BOLTS SHALL BE 3/4" HOT DIPPED GALVANIZED
5. FIRE HYDRANTS WILL BE INSTALLED IN TRUE VERTICAL POSITION RODS SHALL NOT BE COUPLED MORE THAN ONCE. IF THE LENGTH FROM THE VALVE TO THE HYDRANT EXCEEDS 20' THEN A MECHANICAL RESTRAINING GLAND WITH A REBAR CAGE SHALL BE INSTALLED NO MORE THAN 10' FROM HYDRANT AND POURED IN CONCRETE. FIRE HYDRANTS TO BE LOCATED IN ROW OR 2' FOOT EASEMENT ADJACENT TO ROW

ANYTIME SITE WORK, CONSTRUCTION, ROAD WORK, OR ANY OTHER WORK CHANGES THE VERTICAL GRADE OF THE FIRE HYDRANT, THE PERSON RESPONSIBLE FOR THE WORK IS RESPONSIBLE FOR ADJUSTING THE FIRE HYDRANT TO STAY WITHIN COMPLIANCE.

CITY OF RALEIGH
DEPARTMENT OF PUBLIC UTILITIES
STANDARD FIRE HYDRANT INSTALLATION DETAIL

DWG. NO.	REVISIONS	DATE	REVISIONS	DATE
W-4	ABB	4-6-04	PAP	2/7/09
	DHL	2/1/05		

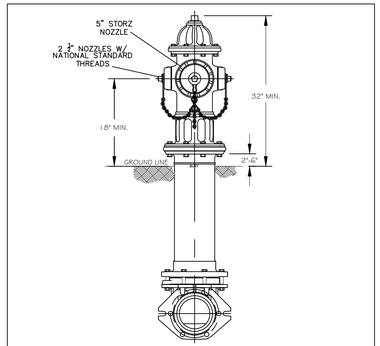

NOTES:
1. ALL PUBLIC FIRE HYDRANTS IN THE CITY OF RALEIGH AND THE MERGER TOWNS OF GARNER, ROLESVILLE, WAKE FOREST, KNIGHTDALE, WENDELL AND ZEBULON SHALL BE PAINTED CHROME YELLOW WITH HIGH REFLECTIVE ALUMINUM SILVER CAPS, BONNETS AND OPERATING NUTS.
2. ALL PRIVATE FIRE HYDRANTS SHALL BE RED.

CITY OF RALEIGH
DEPARTMENT OF PUBLIC UTILITIES
RALEIGH, GARNER, KNIGHTDALE, ROLESVILLE, WAKE FOREST, WENDELL & ZEBULON
STANDARD FIRE HYDRANT WITH 5" STORZ PUMPER NOZZLE

DWG. NO.	REVISIONS	DATE	REVISIONS	DATE
W-5	MAB	6-30-16		
	KAT	9-15-17		

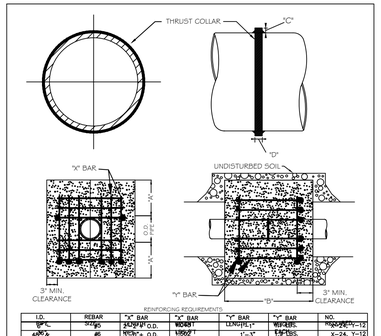

REINFORCING REQUIREMENTS

I.D.	REBAR	"X" BAR	"X" BAR	"Y" BAR	"Y" BAR	NO.
12"-16"	#4	24"x24" O.D.	1100LBS	1'-3"	1'-3"	X-24, Y-12
18"-24"	#5	31"x31" O.D.	1950LBS	1'-3"	1'-3"	X-24, Y-12
greater			1850LBS		1'-3"	EACH

THRUST COLLAR AND THRUSTBLOCK SCHEDULE

I.D. PIPE	"A"	"B"	"C"	"D"
6" - 16"	1'-4"	1'-7"	3"	5/8"
20" - 24"	1'-4"	1'-7"	3"	1/2"
30" - 36"	1'-4"	1'-7"	4"	5/8"
48" & greater	1'-5"	1'-9"	6"	7/8"

NOTES:
1. SEE STANDARD DETAIL W-9 FOR THRUST BLOCK LOCATIONS.
2. CONCRETE SHALL BE 3000 PSI AND TRANSIT MIXED.
3. REINFORCING BARS SHALL BE DEFORMED AND TIED TOGETHER.
4. TRENCH BOTTOM WIDTH IN VICINITY OF THRUST BLOCK INSTALLATION SHALL BE THE MINIMUM WIDTH AS SHOWN ON STANDARD DETAIL W-3.
5. BACKFILL TAMPED IN 6" LIFTS PER STANDARD DETAIL W-3.
6. THRUST COLLAR MUST BE FACTORY WELDED ON BOTH SIDES ALONG BOTH EDGES OF COLLAR AROUND CIRCUMFERENCE.

CITY OF RALEIGH
DEPARTMENT OF PUBLIC UTILITIES
THRUST BLOCKING DESIGN DATA FOR WATER MAINS

DWG. NO.	REVISIONS	DATE	REVISIONS	DATE
W-7	RRH	3-21-00	J.P.S.	
	D.H.L.	6-18-08	11-1-10	

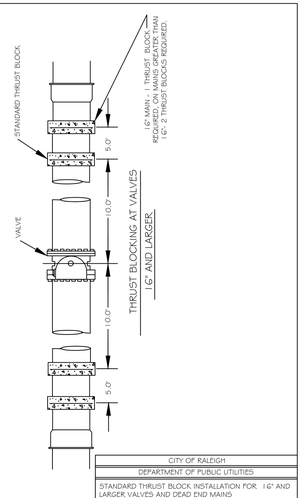

CITY OF RALEIGH
DEPARTMENT OF PUBLIC UTILITIES
STANDARD THRUST BLOCK INSTALLATION FOR 16" AND LARGER VALVES AND DEAD END MAINS

DWG. NO.	REVISIONS	DATE	REVISIONS	DATE
W-8	Y.C.A.	4-12-90	D.W.C.	9-7-99
		6-92	RRH	3-31-00

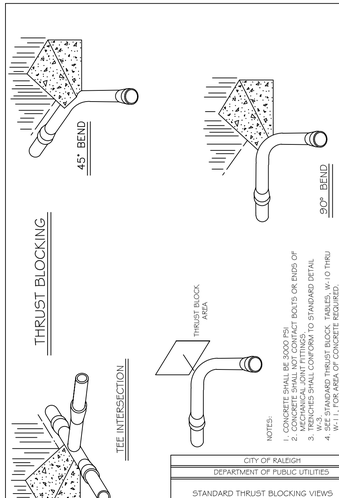

NOTES:
1. CONCRETE SHALL BE 3000 PSI.
2. THRUST BLOCKS SHALL NOT CONTACT BOLTS OR ENDS OF MECHANICAL JOINT FITTINGS.
3. SEE STANDARD THRUST BLOCK TABLES, W-10 THRU W-13.
4. SEE STANDARD DETAIL W-7 FOR DESIGN DATA.
5. ALL BENDS AND INTERSECTIONS SHALL HAVE CONCRETE THRUST BLOCKING.

CITY OF RALEIGH
DEPARTMENT OF PUBLIC UTILITIES
STANDARD THRUST BLOCKING VIEWS

DWG. NO.	REVISIONS	DATE	REVISIONS	DATE
W-9	D.W.C.	3-1-87	RRH	3-31-00
		9-7-99	D.H.L.	6-18-08

REACTION BEARING AREAS FOR HORIZONTAL WATER PIPE BENDS
BASED ON TEST PRESSURE OF 200 P.S.I.

ALL AREAS GIVEN IN SQUARE FEET

SIZE AND DEGREE OF BEND	STATIC THRUST IN POUNDS	MUCK, PEAT, VERY SOFT CLAY 0 LBS/FT²	SOFT CLAY 2000 LBS/FT²	SILT, SAND, CLAY, COARSE SAND 4000 LBS/FT²	SAND, GRAVEL, STIFF CLAY 6000 LBS/FT²	SAND, COMPACT, FIRM 8000 LBS/FT²	SAND, CLAY, DRY 2000 LBS/FT²	SOIL LOOSE 1000 LBS/FT²	ROCK, POOR NATURAL 10,000 LBS/FT²
6"									
11 1/4°	1,108	1	1	1	1	1	1	2	1
22 1/2°	2,207	1	2	2	1	1	1	3	1
45°	4,328	2	3	3	1	1	2	5	1
90°	7,996	2	4	5	1	1	2	8	1
PLUG	5,655	2	3	4	1	1	2	6	1
8"									
11 1/4°	1,970	1	1	2	1	1	1	2	1
22 1/2°	3,922	1	2	3	1	1	1	4	1
45°	7,694	2	4	5	1	1	2	8	1
90°	14,215	4	8	9	2	2	4	15	2
PLUG	10,053	3	5	6	2	2	3	10	1
12"									
11 1/4°	4,433	2	3	3	1	1	2	5	1
22 1/2°	8,826	3	5	6	2	2	3	9	1
45°	17,312	5	9	11	3	3	5	18	2
90°	31,983	8	16	19	4	4	8	32	4
PLUG	22,619	6	12	14	3	3	6	23	3
16"									
11 1/4°	7,881	2	4	5	1	1	2	8	1
22 1/2°	15,691	4	8	10	2	2	4	16	2
45°	30,779	8	16	19	4	4	8	31	4
90°	56,861	15	29	35	8	8	15	57	6
PLUG	40,213	10	21	25	5	5	10	41	5

REACTION BEARING AREAS ARE IN SQUARE FEET MEASURED IN A VERTICAL PLANE IN THE TRENCH SIDE AT AN ANGLE OF 90° TO THE THRUST VECTOR.

USE 6" - 90° BEND VALUE FOR HYDRANTS FOR ADDITIONAL SAFETY FACTOR.

CITY OF RALEIGH
DEPARTMENT OF PUBLIC UTILITIES
THRUST BLOCKING DESIGN QUANTITY TABLE

DWG. NO.	REVISIONS	DATE	REVISIONS	DATE
W-10	D.W.C.	6-23-99		

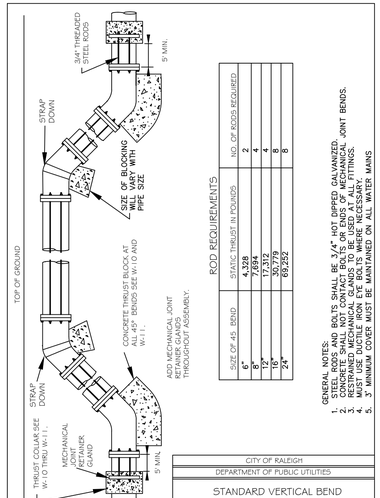

ROD REQUIREMENTS

SIZE OF 45 BEND	STATIC THRUST IN POUNDS	NO. OF RODS REQUIRED
6"	4,328	2
8"	7,694	4
12"	17,312	4
16"	30,779	8
24"	69,252	8

GENERAL NOTES:
1. STEEL RODS AND BOLTS SHALL BE 3/4" HOT DIPPED GALVANIZED.
2. CONCRETE SHALL NOT CONTACT BOLTS OR ENDS OF MECHANICAL JOINT FITTINGS.
3. RESTRAINED MECHANICAL JOINT RESTRAINERS TO BE USED ALL BENDS, TEES, AND VALVES.
4. 3" MINIMUM COVER MUST BE MAINTAINED ON ALL WATER MAINS

CITY OF RALEIGH
DEPARTMENT OF PUBLIC UTILITIES
STANDARD VERTICAL BEND

DWG. NO.	REVISIONS	DATE	REVISIONS	DATE
W-12	ABB	4-6-04	J.P.S.	11-1-10
	D.H.L.	6-18-08		

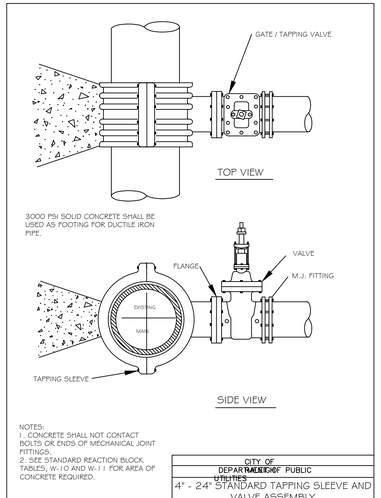

NOTES:
1. CONCRETE SHALL NOT CONTACT BOLTS OR ENDS OF MECHANICAL JOINT FITTINGS.
2. SEE STANDARD REACTION BLOCK TABLES, W-10 AND W-11 FOR AREA OF CONCRETE REQUIRED.

CITY OF RALEIGH
DEPARTMENT OF PUBLIC UTILITIES
4" - 24" STANDARD TAPPING SLEEVE AND VALVE ASSEMBLY

DWG. NO.	REVISIONS	DATE	REVISIONS	DATE
W-14	Y.C.A.	2-31-91	RRH	3-31-00
	D.W.C.	9-7-99	J.P.S.	11-1-10

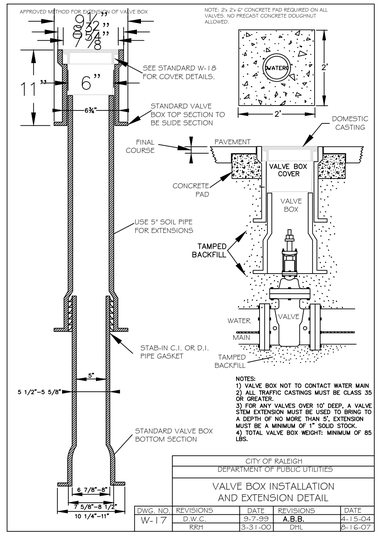

NOTES:
1) VALVE BOX NOT TO CONTACT WATER MAIN.
2) ALL TRAFFIC CASTINGS MUST BE CLASS 35 OR GREATER.
3) FOR ANY VALVES OVER 10' DEEP, A VALVE STEM EXTENSION MUST BE USED TO BRING TO A DEPTH OF NO MORE THAN 5', EXTENSION MUST BE A MINIMUM OF 1" SOLID STOCK.
4) TOTAL VALVE BOX WEIGHT: MINIMUM OF 85 LBS.

CITY OF RALEIGH
DEPARTMENT OF PUBLIC UTILITIES
VALVE BOX INSTALLATION AND EXTENSION DETAIL

DWG. NO.	REVISIONS	DATE	REVISIONS	DATE
W-17	D.W.C.	9-7-99	A.B.B.	4-15-04
	RRH	3-31-00	DHL	8-16-07

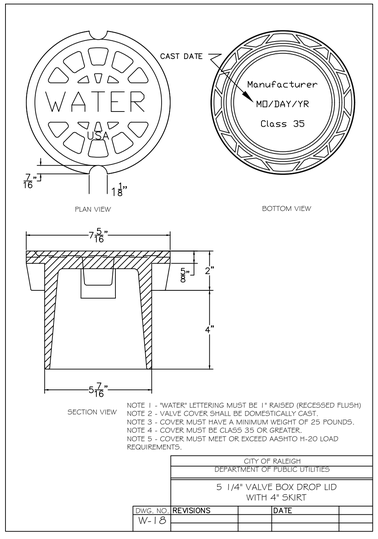

NOTE 1 - "WATER" LETTERING MUST BE 1" RAISED (RECESSED PLUSH)
NOTE 2 - VALVE COVER SHALL BE DOMESTICALLY CAST.
NOTE 3 - COVER MUST HAVE A MINIMUM WEIGHT OF 25 POUNDS.
NOTE 4 - COVER MUST BE CLASS 35 OR GREATER.
NOTE 5 - COVER MUST MEET OR EXCEED AASHTO H-20 LOAD REQUIREMENTS.

CITY OF RALEIGH
DEPARTMENT OF PUBLIC UTILITIES
5 1/4" VALVE BOX DROP LID WITH 4" SKIRT

DWG. NO.	REVISIONS	DATE		
W-18				

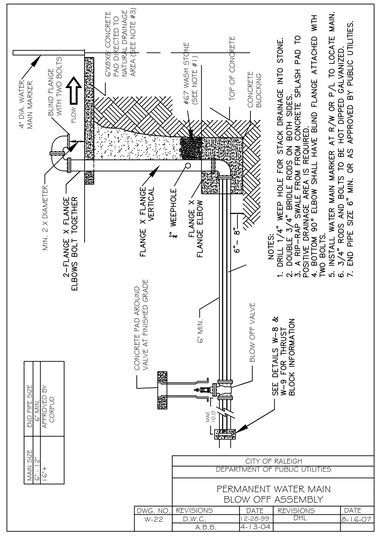

NOTES:
1. DRILL 1/4" WEEP HOLE FOR STACK DRAINAGE INTO STONE.
2. DOUBLE 3/4" BRIDLE RODS ON BOTH SIDES.
3. A RIP-RAP SHALE FROM CONCRETE SPLASH PAD TO FINISHED GRADE AREA FROM PIPE.
4. BOTTOM 90° ELBOW SHALL HAVE BLIND FLANGE ATTACHED WITH TWO BOLTS.
5. INSTALL WATER MAIN MARKER AT R/W OR P/L TO LOCATE MAIN.
6. 3/4" RODS AND BOLTS TO BE HOT DIPPED GALVANIZED.
7. END PIPE SIZE 6" MIN. OR AS APPROVED BY PUBLIC UTILITIES.

MAIN SIZE | END PIPE SIZE | 6" - 24" | 16"+
ALL DIMENSIONS ARE APPROXIMATE BY COPPER

CITY OF RALEIGH
DEPARTMENT OF PUBLIC UTILITIES
PERMANENT WATER MAIN BLOW OFF ASSEMBLY

DWG. NO.	REVISIONS	DATE	REVISIONS	DATE
W-22	D.W.C.	12-28-99	DHL	8-16-07
	A.B.B.	4-13-04		

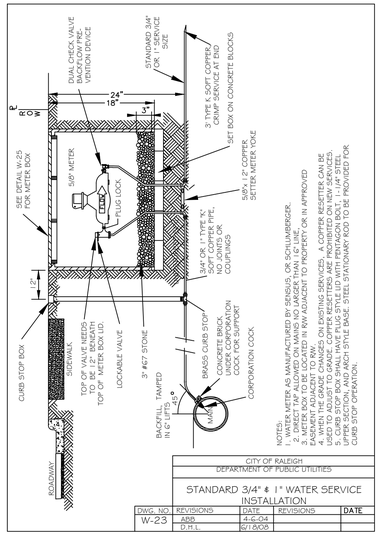

NOTES:
1. WATER METER AS MANUFACTURED BY SENSUS, OR SCHLUMBERGER.
2. DIRECT TAP ALLOWED ON MAINS NO LARGER THAN 12" LINE.
3. SERVICE LINE TO BE SOFT COPPER, CRIMP FITTINGS OR IN APPROVED EASEMENT ADJACENT TO R/W.
4. COPPER SERVICE LINES ONLY ON EXISTING SERVICES. A COPPER RESETTER CAN BE USED TO ADJUST TO GRADE. COPPER RESETTERS ARE PROHIBITED ON NEW SERVICES.
5. CURB STOP BOX SHALL HAVE PLUG STYLE LID WITH PENTAGON BOLT, 1-1/4" STEEL, GALVANIZED, WITH 2" PIPE SIZE STEEL STANDARD AND TYPE PROVIDED FOR CURB STOP OPERATION.

CITY OF RALEIGH
DEPARTMENT OF PUBLIC UTILITIES
STANDARD 3/4" & 1" WATER SERVICE INSTALLATION

DWG. NO.	REVISIONS	DATE	REVISIONS	DATE
W-23	ABB	4-6-04		
	D.H.L.	6/16/08		

REV	DATE	DESCRIPTION
1	10/02/2023	PER TOWN OF ROLESVILLE COMMENT
1	08/01/2023	PER TOWN OF ROLESVILLE COMMENT
1	06/01/2023	INITIAL SUBMITTAL

DESIGNED BY: DF/CD
DRAWN BY: DF/JWM
REVIEWED BY: DF

BGE
5440 WADE PARK BLVD, SUITE 102
RALEIGH NC 27607
WWW.BGENC.COM
NC LICENSE #C-4397

LENNAR CORPORATAION
1100 PERIMETER PARK DRIVE, SUITE 112
MORRISVILLE / NORTH CAROLINA / 27560

PARKER RIDGE
82 SCHOOL STREET
ROLESVILLE / NORTH CAROLINA / 27571

WATER DETAIL (1 OF 2)

NORTH CAROLINA PROFESSIONAL ENGINEER SEAL — PRELIMINARY — DEBRA M. FERM — NOT FOR CONSTRUCTION

FILE NUMBER: 8430-03
DATE: 10/02/2023
C8-7

811 Know what's below. Call before you dig.

\\browngay.net\panzura\Regions\NCA\Projects\Lennar\8430-03 - Lennar - School Street - Rolesville\03 - DWG\PlanSheets\On-Site\C8-6 - WATER DETAIL.dwg Layout: C8-7 WATER DETAIL (1 OF 2) Plotted: 10/2/2023 4:07:25 PM

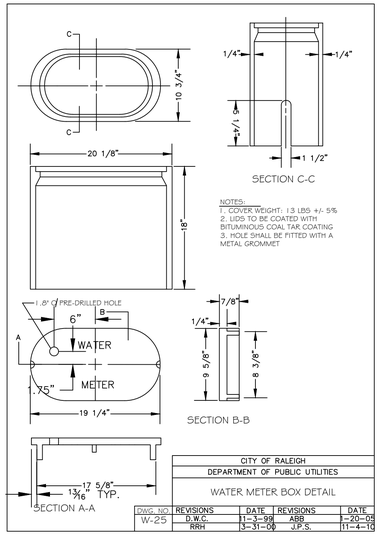

NOTES:
1. COVER WEIGHT: 13 LBS +/- 5%
2. LIDS TO BE COATED WITH BITUMINOUS COAL TAR COATING
3. HOLE SHALL BE FITTED WITH A METAL GROMMET

CITY OF RALEIGH				
DEPARTMENT OF PUBLIC UTILITIES				
WATER METER BOX DETAIL				
DWG. NO.	REVISIONS	DATE	REVISIONS	DATE
W-25	D.W.C.	11-3-99	ABR	1-20-05
	RRH	3-31-09	J.P.S.	11-4-15

REV		DATE	
1		10/02/2023	PER TOWN OF ROLESVILLE COMMENT
2		08/01/2023	PER TOWN OF ROLESVILLE COMMENT
3		06/01/2023	INITIAL SUBMITTAL

DESIGNED BY: DF/CD
DRAWN BY: DF/JWM
REVIEWED BY: DF

BGE
5440 WADE PARK BLVD, SUITE 102
RALEIGH NC 27607
WWW.BGEINC.COM
NC LICENSE #C-4397

LENNAR CORPORTAION
1100 PERIMETER PARK DRIVE, SUITE 112
MORRISVILLE / NORTH CAROLINA / 27560

PARKER RIDGE
82 SCHOOL STREET
ROLESVILLE / NORTH CAROLINA / 27571

WATER DETAIL (2 OF 2)

NORTH CAROLINA PROFESSIONAL ENGINEER SEAL
PRELIMINARY
DEBRA M. FERRI
NOT FOR CONSTRUCTION

FILE NUMBER: 8430-03
DATE: 10/02/2023
C8-8

811 Know what's below. Call before you dig.

RH DISTRICT OPEN SPACE CALCULATIONS		
RH DISTRICT AREA	27.50	AC
REQUIRED OPEN SPACE (15%)	4.13	AC
PROVIDED OPEN SPACE	10.97	AC
REQUIRED ACTIVE OPEN SPACE (50% OF OPEN SPACE)	2.06	AC
PROVIDED ACTIVE OPEN SPACE	2.13	AC
REQUIRED PASSIVE OPEN SPACE	2.06	AC
PROVIDED PASSIVE OPEN SPACE	8.84	AC
MAXIMUM NATURAL RESOURCE AREA ALLOWED (20% OF PASSIVE OPEN SPACE)	1.77	AC
NATURAL RESOURCE AREA INCLUDED	0.10	AC

OPEN SPACE #	CATEGORY	TOTAL AREA (AC)	NATURAL RESOURCE AREA (AC)	SIZE CLASSIFICATION	TYPE	PROGRAM ELEMENTS
4A	PASSIVE	0.59	0	SMALL	N/A	N/A
4B	ACTIVE	0.7	0	SMALL	AMENITY CENTER	POOL/POOL HOUSE, LAWN GAMES
5	PASSIVE	0.85	0	SMALL	N/A	N/A
6	PASSIVE	1.12	0	MEDIUM	N/A	N/A
7A	PASSIVE	6.28	0.1	LARGE	N/A	N/A
7B	ACTIVE	0.26	0	SMALL	POCKET PARK	DOG PARK, BENCHES
7C	ACTIVE	1.08	0	MEDIUM	NEIGHBORHOOD PARK	TOWN OF ROLESVILLE TO PROGRAM
7D	ACTIVE	0.09	0	SMALL	POCKET PARK	TOT LOT, BENCHES

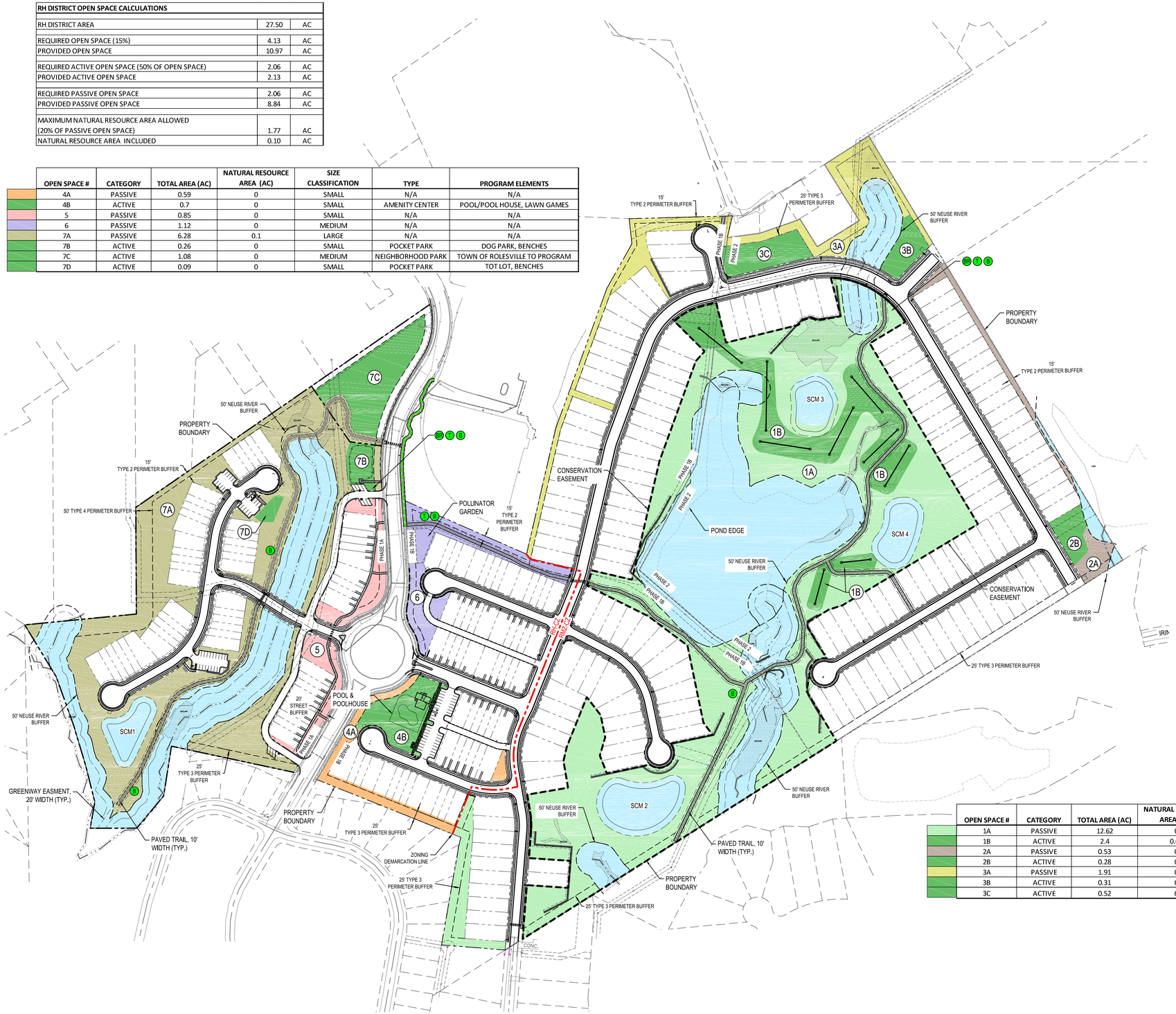

LEGEND

- NATURAL RESOURCE / SCM AREAS (NOT COUNTED TOWARD OPEN SPACE)
- PROPOSED FUTURE GREENWAY CONNECTION
- RM CLUSTER CONSERVATION EASEMENT (CONTAINS 24.98 CONTIGUOUS ACRES OF OPEN SPACE)
- PHASE LINES
- DISC GOLF HOLE
- T — TRASH RECEPTACLE
- B — BENCH (PUBLIC SEATING)
- BR — BIKE RACK

RM CLUSTER CONSERVATION EASEMENT OPEN SPACE		
REQUIRED CLUSTER DEVELOPMENT OPEN SPACE (40%) (DEDICATED IN CONSERVATION EASEMENT)	23.16	AC
PROVIDED CLUSTER DEVELOPMENT OPEN SPACE (DEDICATED IN CONSERVATION EASEMENT)	24.98	AC

RM CLUSTER DISTRICT OPEN SPACE CALCULATIONS		
RM CLUSTER DISTRICT AREA	57.89	AC
REQUIRED TOTAL OPEN SPACE (12%)	6.95	AC
PROVIDED TOTAL OPEN SPACE	18.57	AC
REQUIRED ACTIVE OPEN SPACE (50% OF REQUIRED OPEN SPACE)	3.47	AC
PROVIDED ACTIVE OPEN SPACE	3.51	AC
REQUIRED PASSIVE OPEN SPACE	3.47	AC
PROVIDED PASSIVE OPEN SPACE	15.06	AC
MAXIMUM NATURAL RESOURCE AREA ALLOWED (20% OF PASSIVE OPEN SPACE)	3.01	AC
NATURAL RESOURCE AREA INCLUDED	0.04	AC
MAXIMUM STORM POND AREA ALLOWED (5% OF PASSIVE OPEN SPACE)	0.75	AC
STORM POND AREA INCLUDED	0.00	AC

OPEN SPACE #	CATEGORY	TOTAL AREA (AC)	NATURAL RESOURCE AREA (AC)	SIZE CLASSIFICATION	TYPE	PROGRAM ELEMENTS
1A	PASSIVE	12.62	0	LARGE	N/A	N/A
1B	ACTIVE	2.4	0.04	MEDIUM	NEIGHBORHOOD PARK	DISC GOLF COURSE, OUTDOOR FITNESS
2A	PASSIVE	0.53	0	SMALL	N/A	N/A
2B	ACTIVE	0.28	0	SMALL	POCKET PARK	OUTDOOR FITNESS
3A	PASSIVE	1.91	0	LARGE	N/A	N/A
3B	ACTIVE	0.31	0	SMALL	POCKET PARK	LAWN GAMES
3C	ACTIVE	0.52	0	SMALL	POCKET PARK	PLAYGROUND / TOT LOT

N

0 75 150 300
SCALE: 1" = 150

811 Know what's below. Call before you dig.

REV		
1	10/02/2023	PER TOWN OF ROLESVILLE COMMENT
2	08/01/2023	PER TOWN OF ROLESVILLE COMMENT
0	06/01/2023	INITIAL SUBMITTAL

DESIGNED BY: MC/RZ
DRAWN BY: MC
REVIEWED BY: RZ

BGE
5440 WADE PARK BLVD, SUITE 102
RALEIGH NC 27607
WWW.BGEINC.COM
NC LICENSE #C-4397

LENNAR CORPORTAION
1100 PERIMETER PARK DRIVE, SUITE 112
MORRISVILLE / NORTH CAROLINA / 27560

PARKER RIDGE
82 SCHOOL STREET
ROLESVILLE / NORTH CAROLINA / 27571

OPEN SPACE PLAN

NORTH CAROLINA REGISTERED LANDSCAPE ARCHITECT No.1155 ROBERT C. ZUMWALT

NOT FOR CONSTRUCTION

FILE NUMBER: 8430-03

DATE: 10/02/2023

C9-0

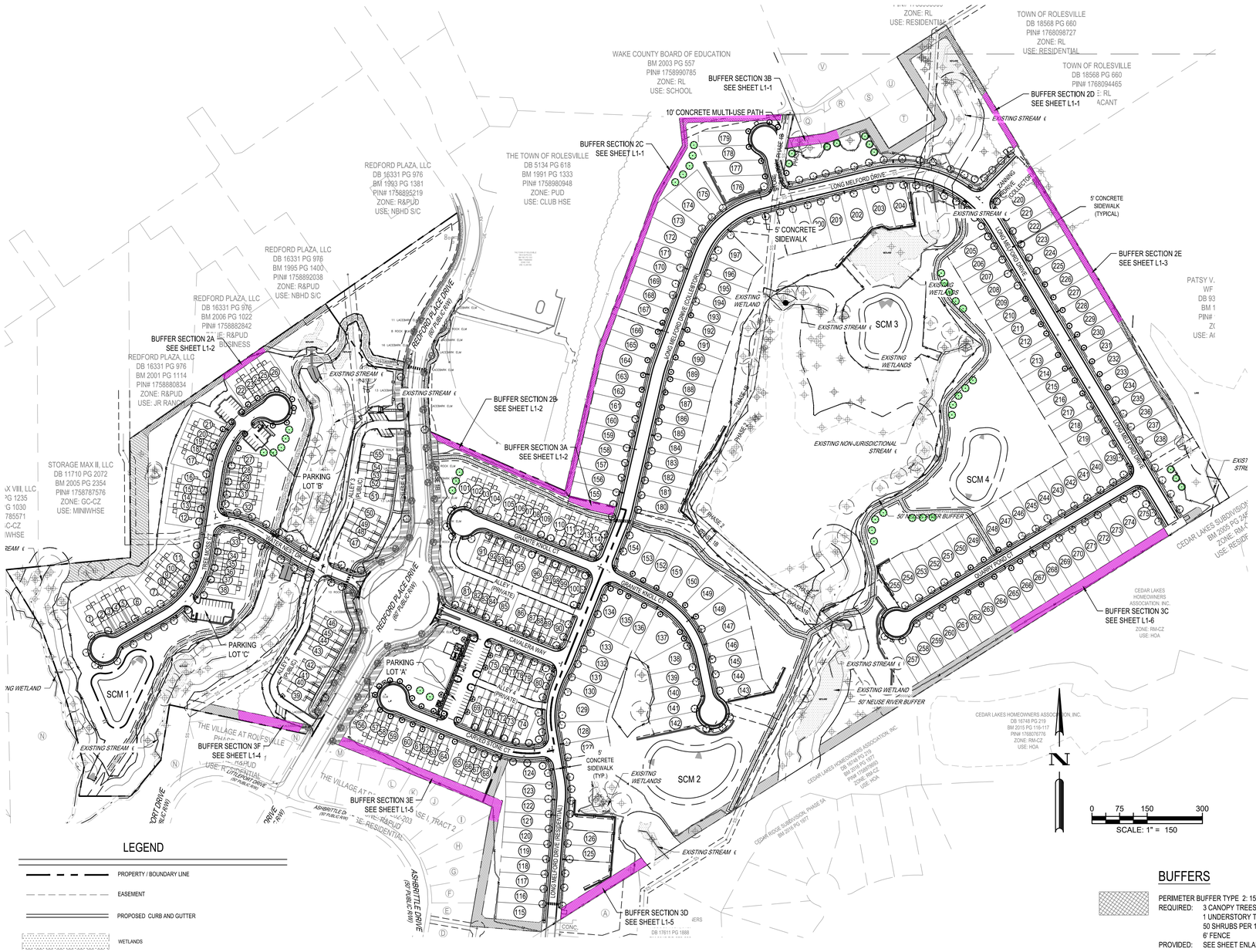

PLANT SCHEDULE: BUFFERS

CANOPY TREES	CODE	QTY	BOTANICAL NAME	COMMON NAME	CAL	HT
	AS	40	Acer saccharum	Sugar Maple	2" MIN.	8` MIN.
	QN	57	Quercus nuttallii	Nuttall Oak	2" MIN.	8` MIN.
	UP	40	Ulmus parvifolia	Lacebark Elm	2" MIN.	8` MIN.
UNDERSTORY TREES	**CODE**	**QTY**	**BOTANICAL NAME**	**COMMON NAME**	**CAL**	**HT**
	CC	17	Cercis canadensis	Eastern Redbud	1" MIN.	8` MIN.
	MS	40	Magnolia stellata	Star Magnolia	1" MIN.	8` MIN.
SHRUBS	**CODE**	**QTY**	**BOTANICAL NAME**	**COMMON NAME**	**HT**	**SPR**
	AG	572	Abelia x grandiflora	Glossy Abelia	18-24"	18-24"
	IC	408	Ilex cornuta 'Burfordii Nana'	Dwarf Burford Holly	18-24"	18-24"
	IR	266	Ilex crenata 'Rotundifolia'	Japanese Holly	18-24"	18-24"
	IG	272	Ilex glabra	Inkberry Holly	18-24"	18-24"
	IV	512	Ilex vomitoria 'Nana'	Dwarf Yaupon	18-24"	18-24"
	LC	102	Loropetalum chinense	Chinese Fringe Flower	18-24"	18-24"

PLANT SCHEDULE: STREET TREES AND PARKING

CANOPY TREES	CODE	QTY	BOTANICAL NAME	COMMON NAME	SIZE	COND
	AS	95	Acer saccharum	Sugar Maple	2" MIN.	8` MIN.
	KP	6	Koelreuteria paniculata	Golden Rain Tree	2" MIN.	8` MIN.
	PS	92	Pistacia chinensis	Chinese Pistache	2" MIN.	8` MIN.
	QF	10	Quercus falcata	Southern Red Oak	2" MIN.	8` MIN.
	QN	91	Quercus nuttallii	Nuttall Oak	2" MIN.	8` MIN.
	UP	66	Ulmus parvifolia	Lacebark Elm	2" MIN.	8` MIN.
	ZS	66	Zelkova serrata	Sawleaf Zelkova	2" MIN.	8` MIN.
SHRUBS	**CODE**	**QTY**	**BOTANICAL NAME**	**COMMON NAME**	**SIZE**	**COND**
	AG	42	Abelia x grandiflora	Glossy Abelia	18-24"	18-24"
	IV	46	Ilex vomitoria 'Nana'	Dwarf Yaupon	18-24"	18-24"

REPLACEMENT TREES

CANOPY TREES	CODE	QTY	BOTANICAL NAME	COMMON NAME	SIZE	COND
	AS	32	Acer saccharum	Sugar Maple	2" MIN.	8` MIN.
	QF	10	Quercus falcata	Southern Red Oak	2" MIN.	8` MIN.

LEGEND

- PROPERTY / BOUNDARY LINE
- EASEMENT
- PROPOSED CURB AND GUTTER
- WETLANDS
- 50' STREAM BUFFER
- TREE PROTECTION FENCE
- LIMIT OF CONSTRUCTION
- BUFFER SECTION TO BE PLANTED*
- EXISTING STREET TREE
- PRESERVED TREE WITH CRITICAL ROOT ZONE**

* BUFFER SECTION LACKING EXISTING VEGETATION OR DISTURBED BY GRADING. SEE ENLARGEMENT SHEETS FOR PLANT QUANTITIES.

** CRITICAL ROOT ZONE (1 FT FROM TREE TRUNK FOR EACH 1 INCH OF TREE DIAMETER) ROOT ZONES SHOWN ONLY FOR TREES NEAR EDGE OF CONSTRUCTION LIMIT / PROTECTION FENCING.

TYPICAL BUFFER SECTION: TYPE 2
SCALE: 1:30

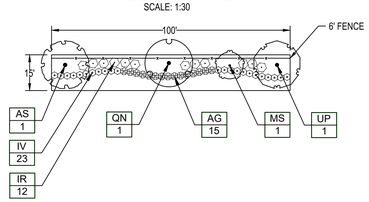

TYPICAL BUFFER SECTION: TYPE 3
SCALE:1:30

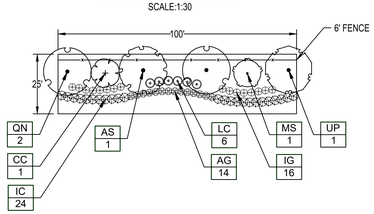

BUFFERS

PERIMETER BUFFER TYPE 2: 15' WIDTH, 3,338 TOTAL LF
REQUIRED: 3 CANOPY TREES PER 100 LF
1 UNDERSTORY TREE PER 100 LF
50 SHRUBS PER 100 LF
6' FENCE
PROVIDED: SEE SHEET ENLARGEMENTS

PERIMETER BUFFER TYPE 3: 25' WIDTH, 3,884 TOTAL LF
REQUIRED: 4 CANOPY TREES PER 100 LF
2 UNDERSTORY TREES PER 100 LF
60 SHRUBS PER 100 LF
6' WALL (6' FENCE PER ZONING)
PROVIDED: SEE SHEET ENLARGEMENTS

PERIMETER BUFFER TYPE 4: 50' WIDTH, 517 TOTAL LF
REQUIRED: 8 CANOPY TREES PER 100 LF
4 UNDERSTORY TREES PER 100 LF
CONTINUOUS HEDGE
3' WALL + 5' BERM (6' FENCE PER ZONING)
PROVIDED: EX. VEGETATION TO SATISFY REQUIREMENT

STREET BUFFER - REDFORD PLACE DRIVE (COLLECTOR):
20' WIDTH, 2,037 LF OF FRONTAGE
REQUIRED: 1 STREET TREE EVERY 50 LF OF FRONTAGE
2,037 LF OF FRONTAGE / 50' = 41 TREES
PROVIDED: 9 CANOPY TREES
33 EXISTING CANOPY TREES TO COUNT TOWARD REQUIREMENT

STREET TREES

REQUIRED: 1 STREET TREE EVERY 40 LF OF FRONTAGE

CARVED STONE CT
REQUIRED: 918 LF OF FRONTAGE / 40' = 23 TREES
PROVIDED: 28 TREES

CALAVERA WAY
REQUIRED: 554 LF OF FRONTAGE / 40' = 14 TREES
PROVIDED: 14 TREES

GRANITE KNOLL CT
REQUIRED: 1,722 LF OF FRONTAGE / 40' = 43 TREES
PROVIDED: 46 TREES

STONE OVERLOOK
REQUIRED: 292 LF OF FRONTAGE / 40' = 7 TREES
PROVIDED: 7 TREES

WATER NEST DR
REQUIRED: 704 LF OF FRONTAGE / 40' = 18 TREES
PROVIDED: 18 TREES

TREE MOSS CT
REQUIRED: 1,660 LF OF FRONTAGE / 40' = 41 TREES
PROVIDED: 48 TREES

QUARRY POND CT
REQUIRED: 1,528 LF OF FRONTAGE / 40' = 38 TREES
PROVIDED: 39 TREES

ZANNING DRIVE
REQUIRED: 264 LF OF FRONTAGE / 40' = 7 TREES
PROVIDED: 7 TREES

LONG MELFORD DRIVE
REQUIRED: 6,800 LF OF FRONTAGE / 40' = 170 TREES
PROVIDED: 171 TREES

PARKING AREAS

PARKING LOT 'A'
REQUIRED: PERIMETER SHRUBS 3' O.C. ROADWAY SCREENING
PROVIDED: 42 SHRUBS

REQUIRED: 1 TREE / 150 SF OF PARKING ISLANDS
1,669 SF PARKING ISLANDS = 11 TREES
PROVIDED: 12 TREES

PARKING LOT 'B'
REQUIRED: PERIMETER SHRUBS 3' O.C. ROADWAY SCREENING
PROVIDED: 25 SHRUBS

PARKING LOT 'C'
REQUIRED: PERIMETER SHRUBS 3' O.C. ROADWAY SCREENING
PROVIDED: 21 SHRUBS

Know what's below. Call before you dig.

REV	DATE	DESCRIPTION
1	10/02/2023	PER TOWN OF ROLESVILLE COMMENT
2	08/01/2023	PER TOWN OF ROLESVILLE COMMENT
0	06/01/2023	INITIAL SUBMITTAL

DESIGNED BY: DF/CD
DRAWN BY: DF/JWM
REVIEWED BY: DF

BGE
5440 WADE PARK BLVD, SUITE 102
RALEIGH NC 27607
WWW.BGENC.COM
NC LICENSE #C-4397

LENNAR CORPORATION
1100 PERIMETER PARK DRIVE, SUITE 112
MORRISVILLE / NORTH CAROLINA / 27560

PARKER RIDGE
82 SCHOOL STREET
ROLESVILLE / NORTH CAROLINA / 27571

OVERALL LANDSCAPE PLAN

NORTH CAROLINA REGISTERED LANDSCAPE ARCHITECT No.1155 ROBERT C. ZUMWALT

NOT FOR CONSTRUCTION

FILE NUMBER: 8430-03

DATE: 10/02/2023

L1-0

G:\NCA\Projects\Lennar\8430-03 - Lennar - School Street - Rolesville\03 - DWG\PlanSheets\On-Site\L1-0 - LS PLAN.dwg Layout: L1-0 OVERALL LANDSCAPE PLAN Plotted: 10/2/2023 3:22:30 PM

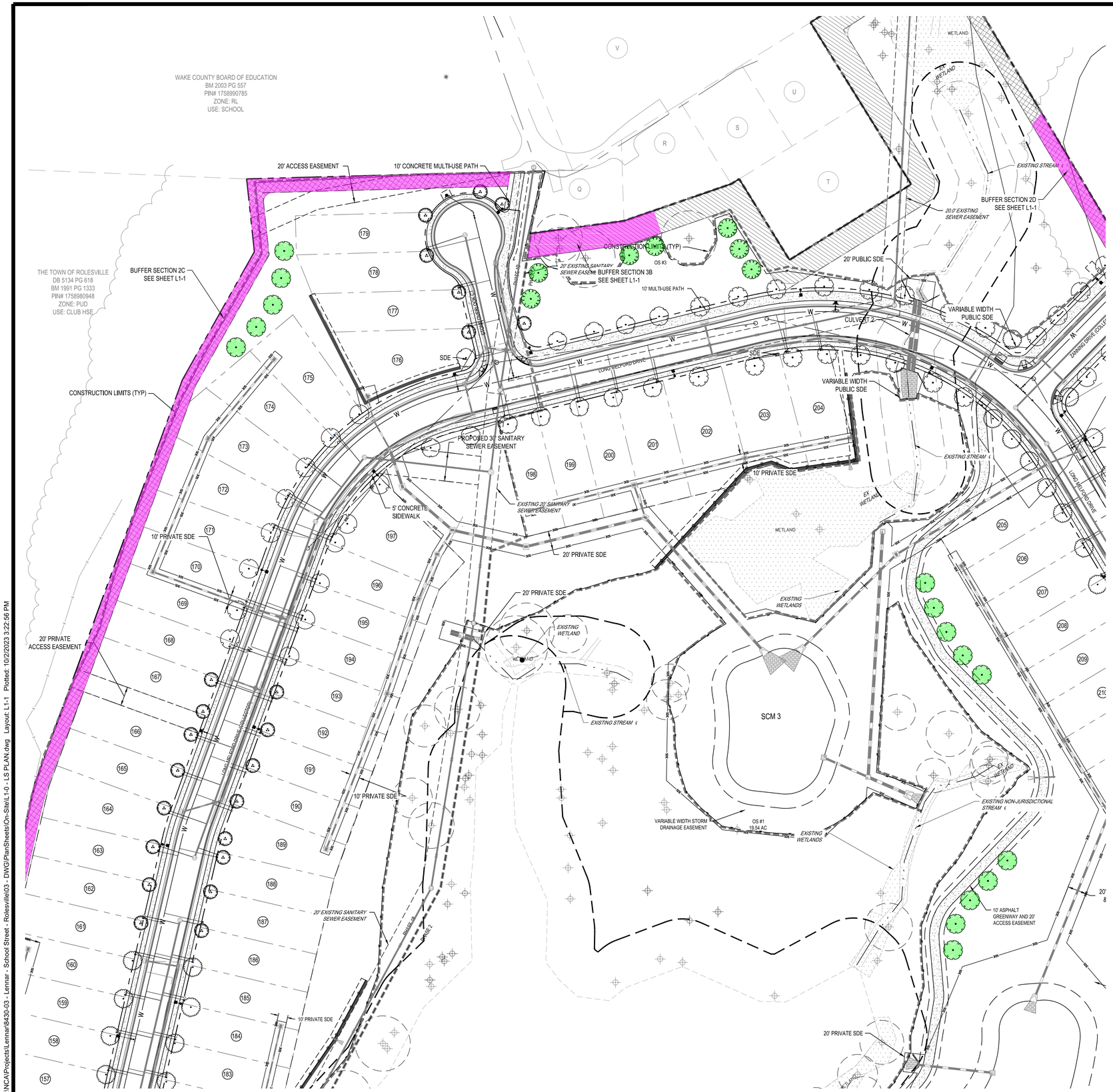

BUFFER SECTION 2C: 1,333 LF	
CANOPY TREES	COMMON NAME
13	Lacebark Elm
13	Nuttall Oak
13	Sugar Maple
UNDERSTORY TREES	COMMON NAME
13	Star Magnolia
SHRUBS	COMMON NAME
307	Dwarf Yaupon
200	Glossy Abelia
160	Japanese Holly

BUFFER SECTION 3B: 138 LF	
CANOPY TREES	COMMON NAME
1	Sugar Maple
3	Nuttall Oak
1	Lacebark Elm
UNDERSTORY TREES	COMMON NAME
1	Eastern Redbud
1	Star Magnolia
SHRUBS	COMMON NAME
19	Glossy Abelia
33	Dwarf Burford Holly
22	Inkberry Holly
8	Chinese Fringe Flower

BUFFER SECTION 2D: 167 LF	
CANOPY TREES	COMMON NAME
2	Lacebark Elm
2	Nuttall Oak
2	Sugar Maple
UNDERSTORY TREES	COMMON NAME
2	Star Magnolia
SHRUBS	COMMON NAME
38	Dwarf Yaupon
25	Glossy Abelia
20	Japanese Holly

PLANT KEY	
CANOPY TREES	COMMON NAME
	Sugar Maple
	Golden Rain Tree
	Chinese Pistache
	Nuttall Oak
	Lacebark Elm
	Sawleaf Zelkova
SHRUBS	COMMON NAME
	Glossy Abelia
	Dwarf Yaupon

LANDSCAPE BUFFERS

PERIMETER BUFFER TYPE 2 (15' WIDTH)

PERIMETER BUFFER TYPE 3 (25' WIDTH)

PERIMETER BUFFER TYPE 4 (50' WIDTH)

STREET BUFFER (20' WIDTH)

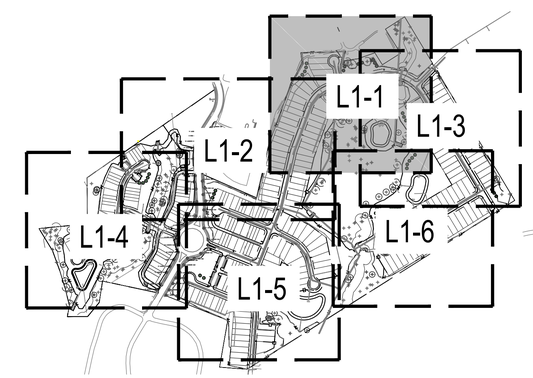

N

0 25' 50' 100'
SCALE: 1" = 50'

811
Know what's below.
Call before you dig.

REV	DATE	DESCRIPTION
1	10/02/2023	PER TOWN OF ROLESVILLE COMMENT
2	08/01/2023	PER TOWN OF ROLESVILLE COMMENT
3	06/01/2023	INITIAL SUBMITTAL

DESIGNED BY: DF/CD
DRAWN BY: DF/JWM
REVIEWED BY: DF

BGE
5440 WADE PARK BLVD, SUITE 102
RALEIGH NC 27607
WWW.BGEINC.COM
NC LICENSE #C-4397

LENNAR CORPORTAION
1100 PERIMETER PARK DRIVE, SUITE 112
MORRISVILLE / NORTH CAROLINA / 27560

PARKER RIDGE
82 SCHOOL STREET
ROLESVILLE / NORTH CAROLINA / 27571

ENLARGED LANDSCAPE PLAN (1 OF 6)

NORTH CAROLINA REGISTERED LANDSCAPE ARCHITECT No.1155 ROBERT C. ZUMWALT

NOT FOR CONSTRUCTION

FILE NUMBER: 8430-03

DATE: 10/02/2023

L1-1

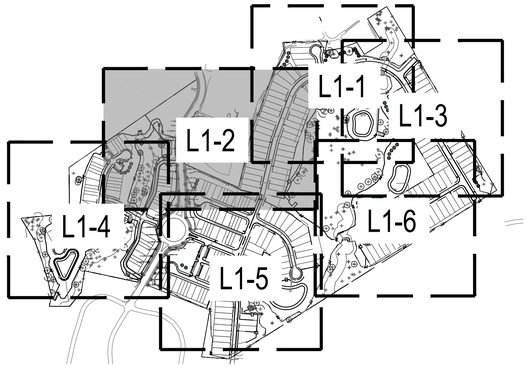

LANDSCAPE BUFFERS

- PERIMETER BUFFER TYPE 2 (15' WIDTH)
- PERIMETER BUFFER TYPE 3 (25' WIDTH)
- PERIMETER BUFFER TYPE 4 (50' WIDTH)
- STREET BUFFER (20' WIDTH)

PLANT KEY

CANOPY TREES	COMMON NAME
	Sugar Maple
	Golden Rain Tree
	Chinese Pistache
	Nuttall Oak
	Lacebark Elm
	Sawleaf Zelkova
SHRUBS	**COMMON NAME**
	Glossy Abelia
	Dwarf Yaupon

BUFFER SECTION 2A: 135 LF

CANOPY TREES	COMMON NAME
1	Lacebark Elm
1	Nuttall Oak
1	Sugar Maple
UNDERSTORY TREES	COMMON NAME
1	Star Magnolia
SHRUBS	COMMON NAME
31	Dwarf Yaupon
20	Glossy Abelia
16	Japanese Holly

BUFFER SECTION 2B: 387 LF

CANOPY TREES	COMMON NAME
4	Lacebark Elm
4	Nuttall Oak
4	Sugar Maple
UNDERSTORY TREES	COMMON NAME
4	Star Magnolia
SHRUBS	COMMON NAME
89	Dwarf Yaupon
58	Glossy Abelia
46	Japanese Holly

BUFFER SECTION 3A: 127 LF

CANOPY TREES	COMMON NAME
1	Sugar Maple
3	Nuttall Oak
1	Lacebark Elm
UNDERSTORY TREES	COMMON NAME
1	Eastern Redbud
1	Star Magnolia
SHRUBS	COMMON NAME
18	Glossy Abelia
30	Dwarf Burford Holly
20	Inkberry Holly
8	Chinese Fringe Flower

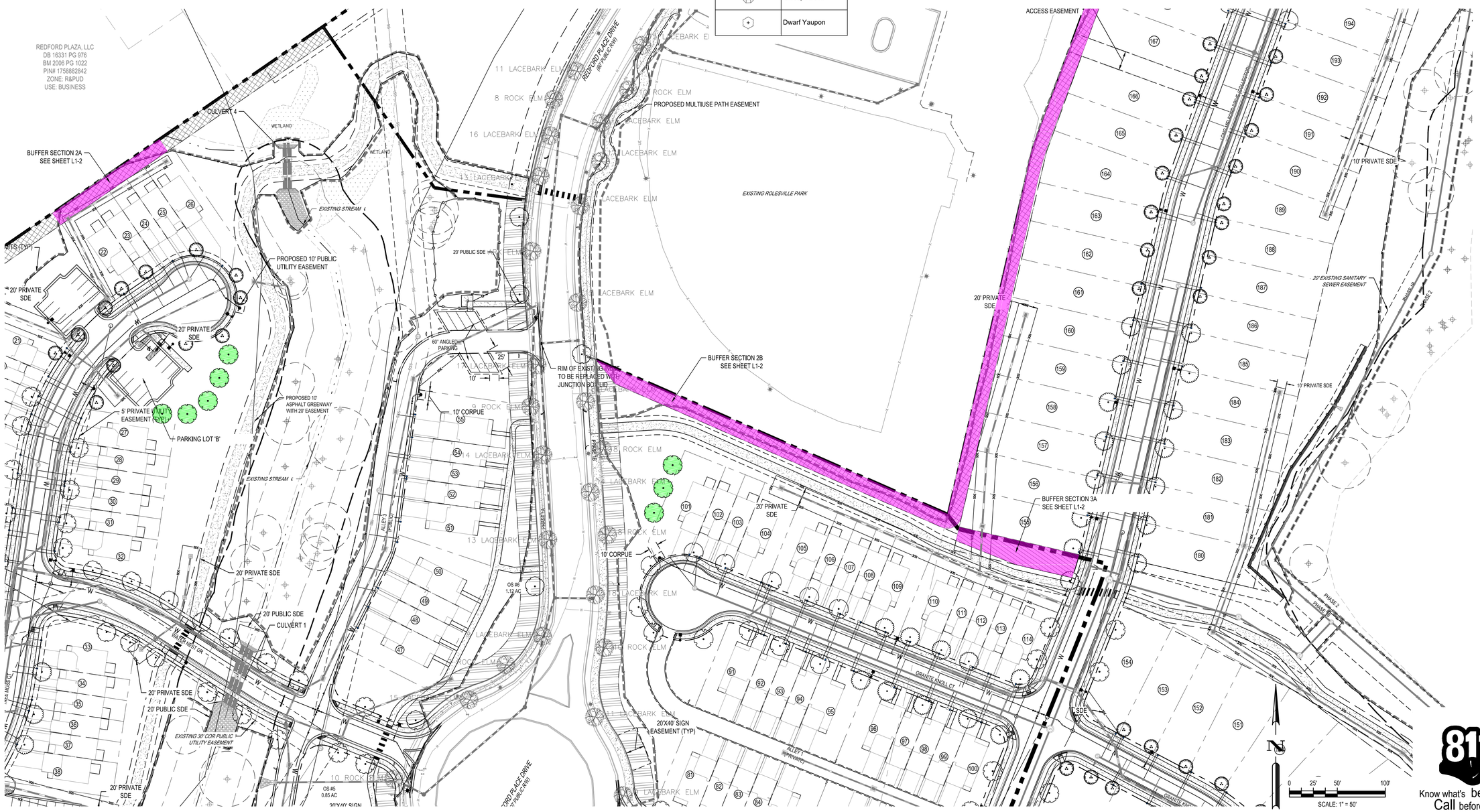

811 Know what's below. Call before you dig.

REV	DATE	DESCRIPTION
4		
3		
2	10/02/2023	PER TOWN OF ROLESVILLE COMMENT
1	08/01/2023	PER TOWN OF ROLESVILLE COMMENT
0	06/01/2023	INITIAL SUBMITTAL

DESIGNED BY: DF/CD
DRAWN BY: DF/JWM
REVIEWED BY: DF

BGE
5440 WADE PARK BLVD, SUITE 102
RALEIGH NC 27607
WWW.BGEINC.COM
NC LICENSE #C-4397

LENNAR CORPORTAION
1100 PERIMETER PARK DRIVE, SUITE 112
MORRISVILLE / NORTH CAROLINA / 27560

PARKER RIDGE
82 SCHOOL STREET
ROLESVILLE / NORTH CAROLINA / 27571

ENLARGED LANDSCAPE PLAN (2 OF 6)

NORTH CAROLINA REGISTERED No.1155 LANDSCAPE ARCHITECT ROBERT C. ZUMWALT

NOT FOR CONSTRUCTION

FILE NUMBER: 8430-03

DATE: 10/02/2023

L1-2

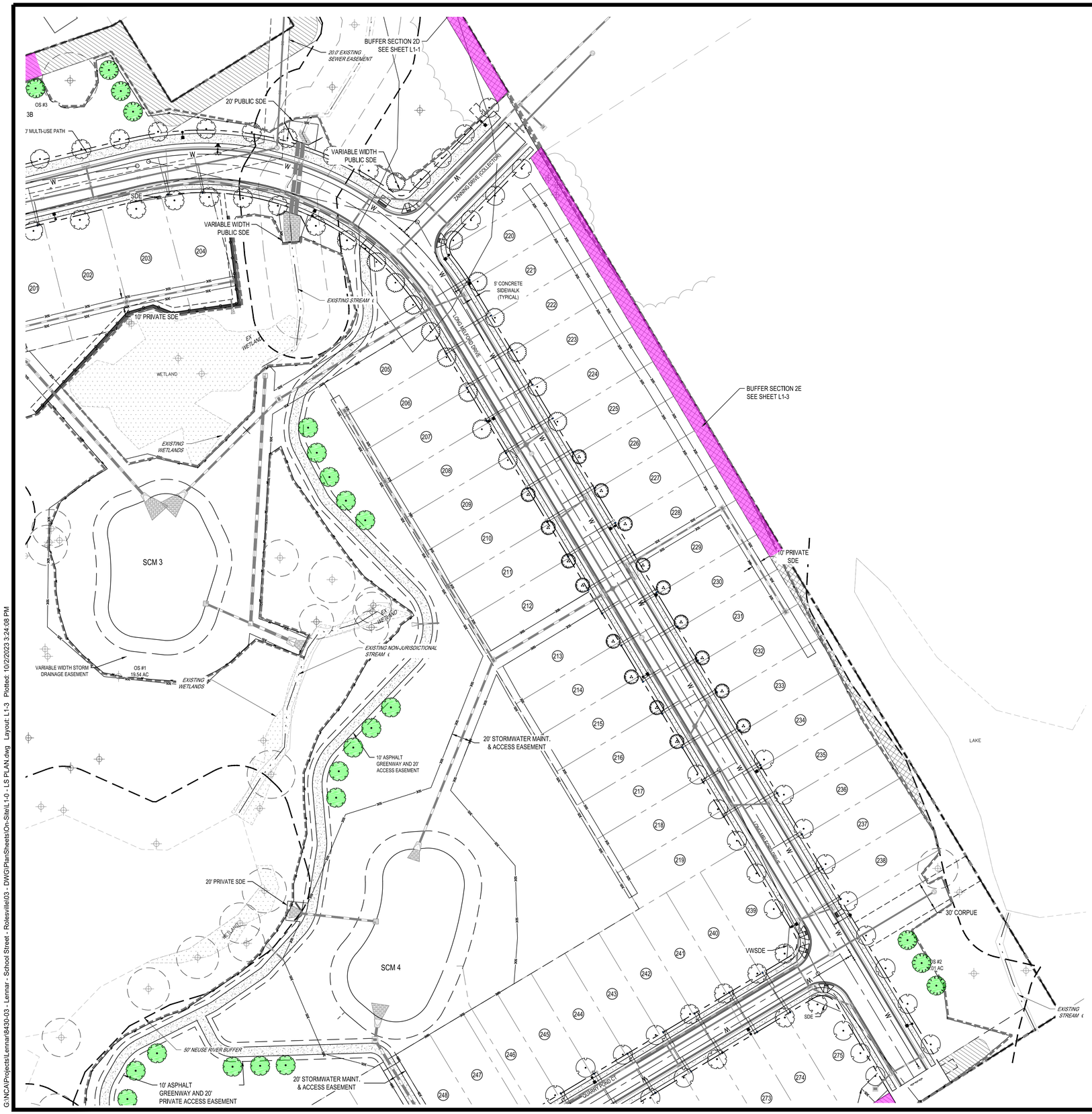

BUFFER SECTION 2E: 486 LF

CANOPY TREES	COMMON NAME
5	Lacebark Elm
5	Nuttall Oak
5	Sugar Maple
UNDERSTORY TREES	COMMON NAME
5	Star Magnolia
SHRUBS	COMMON NAME
112	Dwarf Yaupon
73	Glossy Abelia
58	Japanese Holly

LANDSCAPE BUFFERS

PERIMETER BUFFER TYPE 2 (15' WIDTH)

PERIMETER BUFFER TYPE 3 (25' WIDTH)

PERIMETER BUFFER TYPE 4 (50' WIDTH)

STREET BUFFER (20' WIDTH)

PLANT KEY

CANOPY TREES	COMMON NAME
	Sugar Maple
	Golden Rain Tree
	Chinese Pistache
	Nuttall Oak
	Lacebark Elm
	Sawleaf Zelkova
SHRUBS	COMMON NAME
	Glossy Abelia
	Dwarf Yaupon

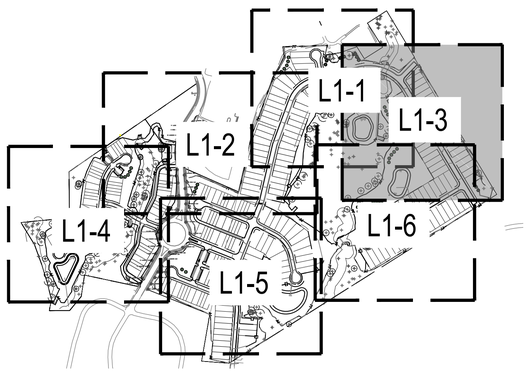

N

0 25' 50' 100'
SCALE: 1" = 50'

811
Know what's below.
Call before you dig.

REV		
1	10/02/2023	PER TOWN OF ROLESVILLE COMMENT
2	08/01/2023	PER TOWN OF ROLESVILLE COMMENT
3	06/01/2023	INITIAL SUBMITTAL

DESIGNED BY: DF/CD
DRAWN BY: DF/JWM
REVIEWED BY: DF

BGE
5440 WADE PARK BLVD, SUITE 102
RALEIGH NC 27607
WWW.BGENC.COM
NC LICENSE #C-4397

LENNAR CORPORTAION
1100 PERIMETER PARK DRIVE, SUITE 112
MORRISVILLE / NORTH CAROLINA / 27560

PARKER RIDGE
82 SCHOOL STREET
ROLESVILLE / NORTH CAROLINA / 27571

ENLARGED LANDSCAPE PLAN (3 OF 6)

NORTH CAROLINA REGISTERED LANDSCAPE ARCHITECT No.1155 ROBERT C. ZUMWALT

NOT FOR CONSTRUCTION

FILE NUMBER: 8430-03

DATE: 10/02/2023

L1-3

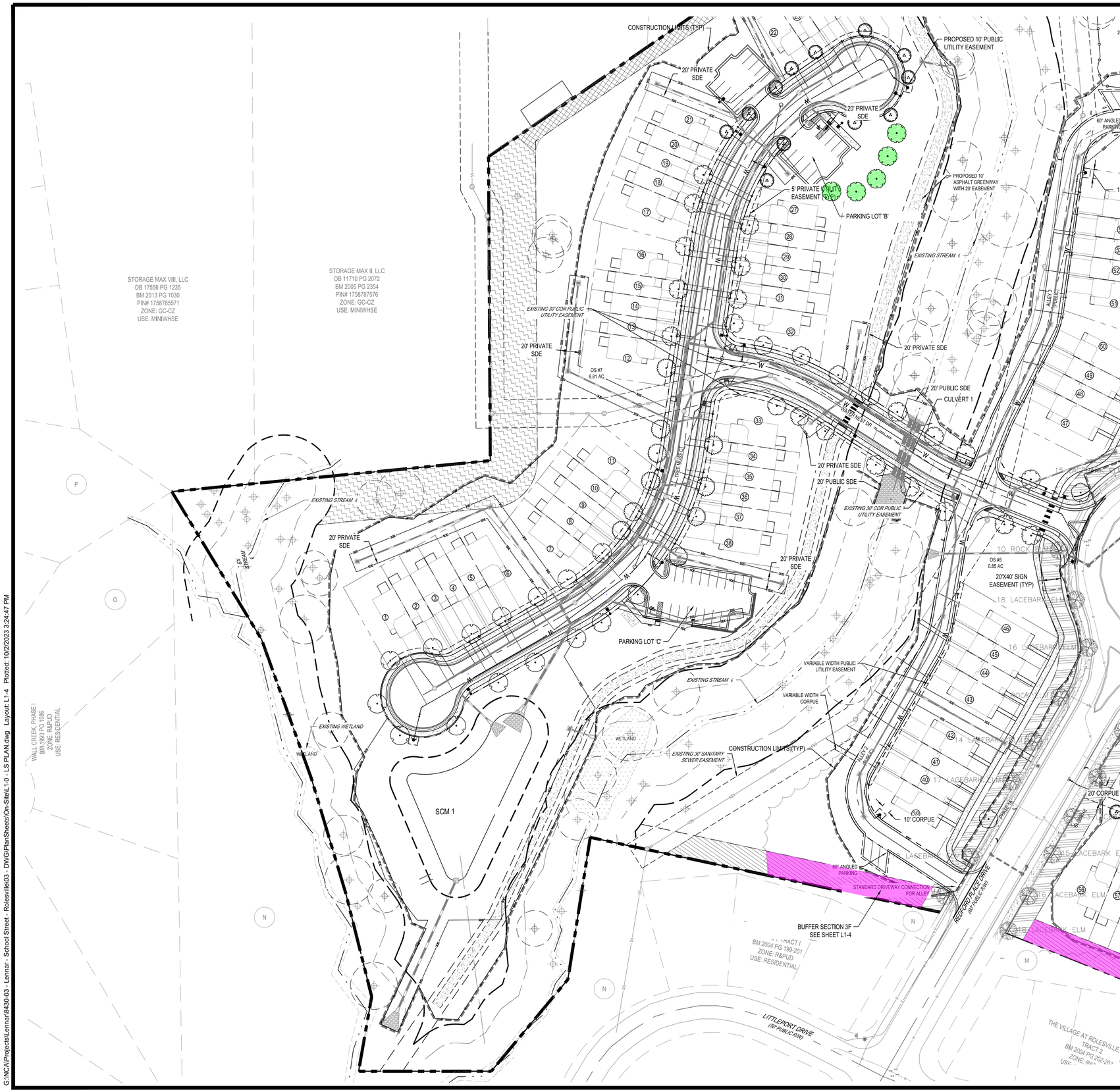

BUFFER SECTION 3F: 172 LF

CANOPY TREES	COMMON NAME
2	Sugar Maple
3	Nuttall Oak
2	Lacebark Elm
UNDERSTORY TREES	COMMON NAME
2	Eastern Redbud
2	Star Magnolia
SHRUBS	COMMON NAME
24	Glossy Abelia
41	Dwarf Burford Holly
28	Inkberry Holly
10	Chinese Fringe Flower

PLANT KEY

CANOPY TREES	COMMON NAME
	Sugar Maple
	Golden Rain Tree
	Chinese Pistache
	Nuttall Oak
	Lacebark Elm
	Sawleaf Zelkova
SHRUBS	COMMON NAME
	Glossy Abelia
	Dwarf Yaupon

LANDSCAPE BUFFERS

- PERIMETER BUFFER TYPE 2 (15' WIDTH)
- PERIMETER BUFFER TYPE 3 (25' WIDTH)
- PERIMETER BUFFER TYPE 4 (50' WIDTH)
- STREET BUFFER (20' WIDTH)

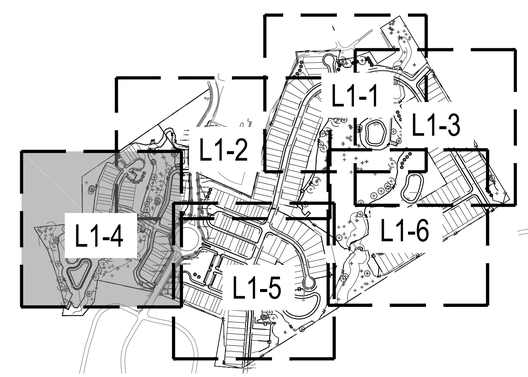

N

0 25' 50' 100'
SCALE: 1" = 50'

811 Know what's below. Call before you dig.

REV	DATE	DESCRIPTION
1	10/02/2023	PER TOWN OF ROLESVILLE COMMENT
2	08/01/2023	PER TOWN OF ROLESVILLE COMMENT
REV	06/01/2023	INITIAL SUBMITTAL

DESIGNED BY: DF/CD
DRAWN BY: DF/JWM
REVIEWED BY: DF

BGE
5440 WADE PARK BLVD, SUITE 102
RALEIGH NC 27607
WWW.BGENC.COM
NC LICENSE #C-4397

LENNAR CORPORTAION
1100 PERIMETER PARK DRIVE, SUITE 112
MORRISVILLE / NORTH CAROLINA / 27560

PARKER RIDGE
82 SCHOOL STREET
ROLESVILLE / NORTH CAROLINA / 27571

ENLARGED LANDSCAPE PLAN (4 OF 6)

NORTH CAROLINA REGISTERED LANDSCAPE ARCHITECT No.1155 ROBERT C. ZUMWALT

NOT FOR CONSTRUCTION

FILE NUMBER: 8430-03
DATE: 10/02/2023
L1-4

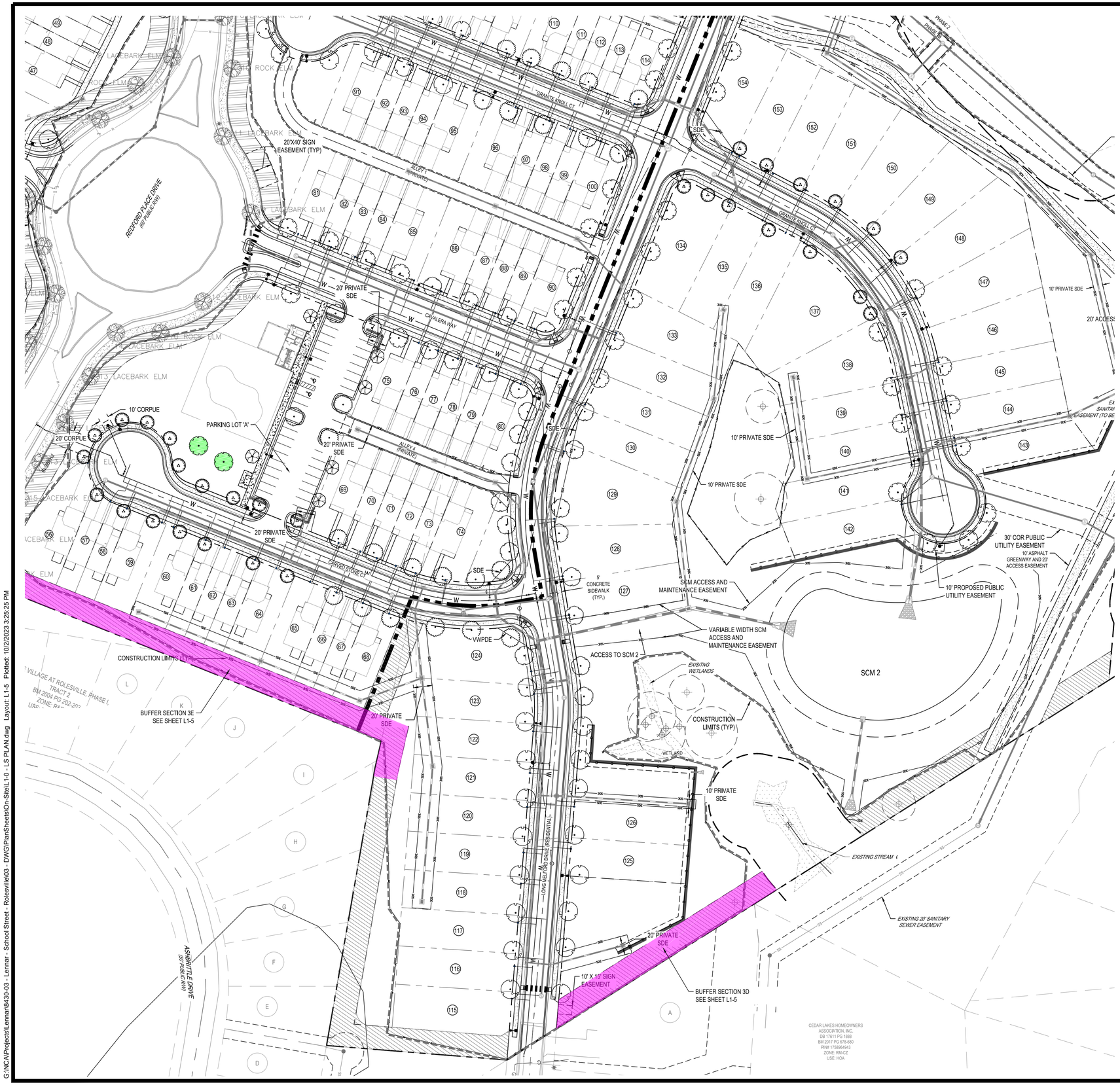

BUFFER SECTION 3D: 265 LF	
CANOPY TREES	COMMON NAME
3	Sugar Maple
5	Nuttall Oak
3	Lacebark Elm
UNDERSTORY TREES	COMMON NAME
3	Eastern Redbud
3	Star Magnolia
SHRUBS	COMMON NAME
37	Glossy Abelia
64	Dwarf Burford Holly
42	Inkberry Holly
16	Chinese Fringe Flower

BUFFER SECTION 3E: 506 LF	
CANOPY TREES	COMMON NAME
5	Sugar Maple
10	Nuttall Oak
5	Lacebark Elm
UNDERSTORY TREES	COMMON NAME
5	Eastern Redbud
5	Star Magnolia
SHRUBS	COMMON NAME
71	Glossy Abelia
121	Dwarf Burford Holly
81	Inkberry Holly
30	Chinese Fringe Flower

PLANT KEY	
CANOPY TREES	COMMON NAME
	Sugar Maple
	Golden Rain Tree
	Chinese Pistache
	Nuttall Oak
	Lacebark Elm
	Sawleaf Zelkova
SHRUBS	COMMON NAME
	Glossy Abelia
	Dwarf Yaupon

LANDSCAPE BUFFERS

- PERIMETER BUFFER TYPE 2 (15' WIDTH)
- PERIMETER BUFFER TYPE 3 (25' WIDTH)
- PERIMETER BUFFER TYPE 4 (50' WIDTH)
- STREET BUFFER (20' WIDTH)

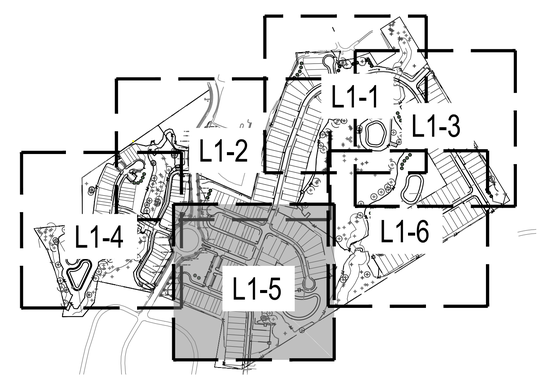

N

0 25' 50' 100'
SCALE: 1" = 50'

811
Know what's below.
Call before you dig.

REV	DATE	DESCRIPTION
1	10/02/2023	PER TOWN OF ROLESVILLE COMMENT
2	08/01/2023	PER TOWN OF ROLESVILLE COMMENT
0	06/01/2023	INITIAL SUBMITTAL

DESIGNED BY: DF/CD
DRAWN BY: DF/JWM
REVIEWED BY: DF

BGE
5440 WADE PARK BLVD, SUITE 102
RALEIGH NC 27607
WWW.BGEINC.COM
NC LICENSE #C-4397

LENNAR CORPORATAION
1100 PERIMETER PARK DRIVE, SUITE 112
MORRISVILLE / NORTH CAROLINA / 27560

PARKER RIDGE
82 SCHOOL STREET
ROLESVILLE / NORTH CAROLINA / 27571

ENLARGED LANDSCAPE PLAN (5 OF 6)

NORTH CAROLINA REGISTERED LANDSCAPE ARCHITECT No.1155 ROBERT C. JAMES

NOT FOR CONSTRUCTION

FILE NUMBER: 8430-03
DATE: 10/02/2023
L1-5

G:\NCA\Projects\Lennar\8430-03 - Lennar - School Street - Rolesville\03 - DWG\PlanSheets\On-Site\L1-0 - LS PLAN.dwg Layout: L1-5 Plotted: 10/2/2023 3:25:25 PM

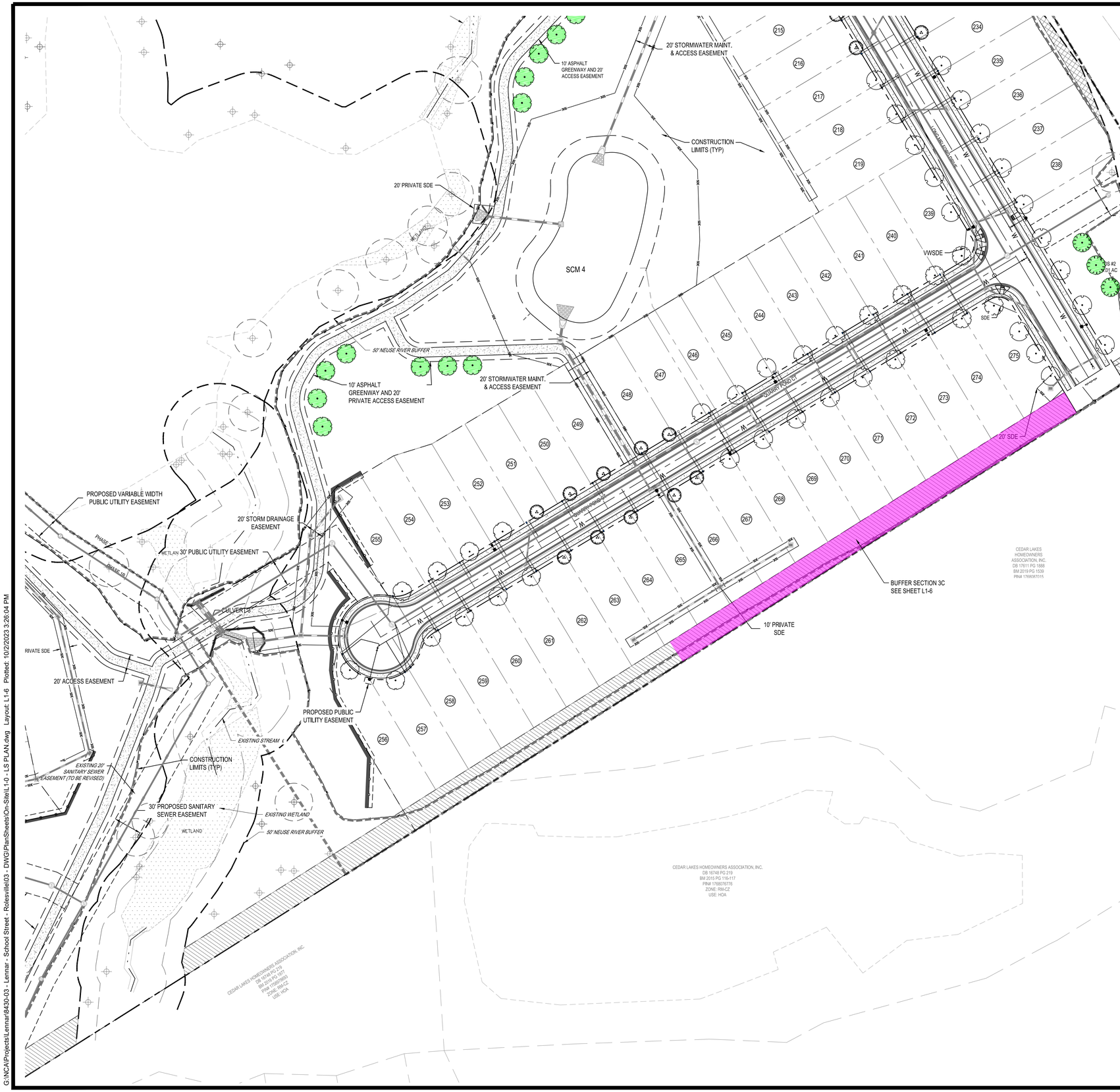

BUFFER SECTION 3C: 494 LF	
CANOPY TREES	COMMON NAME
5	Sugar Maple
10	Nuttall Oak
5	Lacebark Elm
UNDERSTORY TREES	COMMON NAME
5	Eastern Redbud
5	Star Magnolia
SHRUBS	COMMON NAME
69	Glossy Abelia
119	Dwarf Burford Holly
79	Inkberry Holly
30	Chinese Fringe Flower

LANDSCAPE BUFFERS

PERIMETER BUFFER TYPE 2 (15' WIDTH)

PERIMETER BUFFER TYPE 3 (25' WIDTH)

PERIMETER BUFFER TYPE 4 (50' WIDTH)

STREET BUFFER (20' WIDTH)

PLANT KEY	
CANOPY TREES	COMMON NAME
	Sugar Maple
	Golden Rain Tree
	Chinese Pistache
	Nuttall Oak
	Lacebark Elm
	Sawleaf Zelkova
SHRUBS	COMMON NAME
	Glossy Abelia
	Dwarf Yaupon

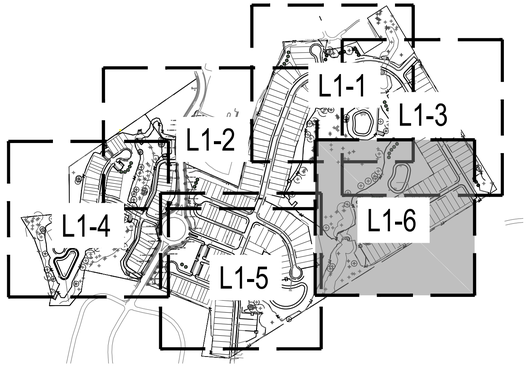

N

0 25' 50' 100'

SCALE: 1" = 50'

811 Know what's below. Call before you dig.

REV	DATE	DESCRIPTION
1	10/02/2023	PER TOWN OF ROLESVILLE COMMENT
2	08/01/2023	PER TOWN OF ROLESVILLE COMMENT
3	06/01/2023	INITIAL SUBMITTAL

DESIGNED BY: DF/CD

DRAWN BY: DF/JWM

REVIEWED BY: DF

BGE
5440 WADE PARK BLVD, SUITE 102
RALEIGH NC 27607
WWW.BGEINC.COM
NC LICENSE #C-4397

LENNAR CORPORTAION
1100 PERIMETER PARK DRIVE, SUITE 112
MORRISVILLE / NORTH CAROLINA / 27560

PARKER RIDGE
82 SCHOOL STREET
ROLESVILLE / NORTH CAROLINA / 27571

ENLARGED LANDSCAPE PLAN (6 OF 6)

NORTH CAROLINA REGISTERED LANDSCAPE ARCHITECT No.1155 ROBERT C. ZUMWALT

NOT FOR CONSTRUCTION

FILE NUMBER: 8430-03

DATE: 10/02/2023

L1-6

G:\NCA\Projects\Lennar\8430-03 - Lennar - School Street - Rolesville\03 - DWG\PlanSheets\On-Site\L1-0 - LS PLAN.dwg Layout: L1-6 Plotted: 10/2/2023 3:26:04 PM

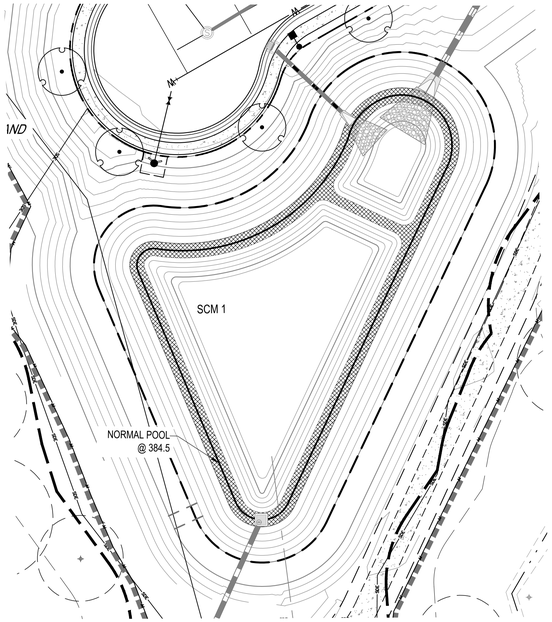

SCM 1 PLANTING CALCULATIONS

NORMAL POOL ELEVATION: 384.5'

VEGETATED SHELF: 3,065 S.F. (0.5' BELOW TO 0.5' ABOVE PERMANENT POND ELEV.)

REQUIRED: .25 PLANTS PER SQUARE FOOT
(3 MINIMUM HERBACEOUS SPECIES)
0.25 PLANTS x 3,065 SF = 766 PLANTS
PROVIDED: (255) HC, (255) LC, (255) CT

SCM 1 PLANTING SCHEDULE

KEY	QTY.	SCIENTIFIC NAME	COMMON NAME	CONT.
HC	255	HIBISCUS COCCINEUS	SCARLET ROSE MALLOW	24"Ø x 5" PLUG
LC	255	LOBELIA CARDINALIS	CARDINAL FLOWER	24"Ø x 5" PLUG
CT	255	CAREX TENERA	QUILL SEDGE	24"Ø x 5" PLUG

VEGETATED SHELF MIX

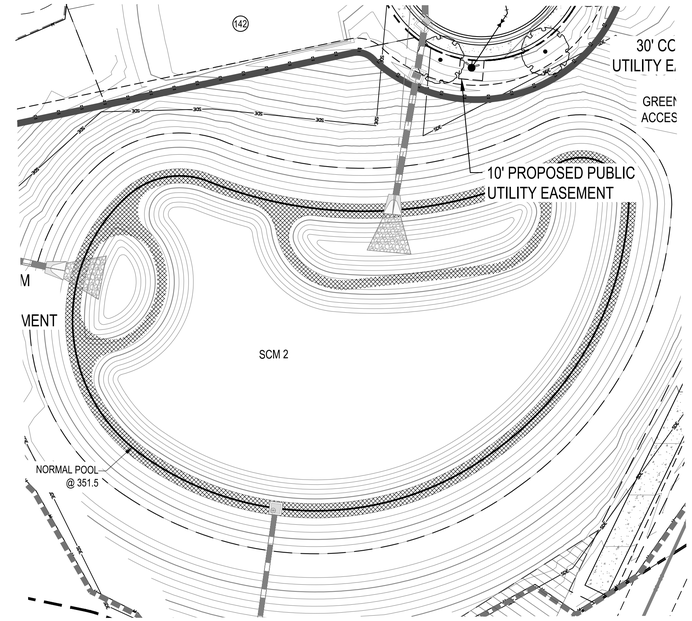

SCM 2 PLANTING CALCULATIONS

NORMAL POOL ELEVATION: 351.5'

VEGETATED SHELF: 5,108 S.F. (0.5' BELOW TO 0.5' ABOVE PERMANENT POND ELEV.)

REQUIRED: .25 PLANTS PER SQUARE FOOT
(3 MINIMUM HERBACEOUS SPECIES)
0.25 PLANTS x 5,108 SF = 1,277 PLANTS
PROVIDED: (426) HC, (426) LC, (426) CT

SCM 2 PLANTING SCHEDULE

KEY	QTY.	SCIENTIFIC NAME	COMMON NAME	CON.
HC	426	HIBISCUS COCCINEUS	SCARLET ROSE MALLOW	24"Ø x 5" PLUG
LC	426	LOBELIA CARDINALIS	CARDINAL FLOWER	24"Ø x 5" PLUG
CT	426	CAREX TENERA	QUILL SEDGE	24"Ø x 5" PLUG

VEGETATED SHELF MIX

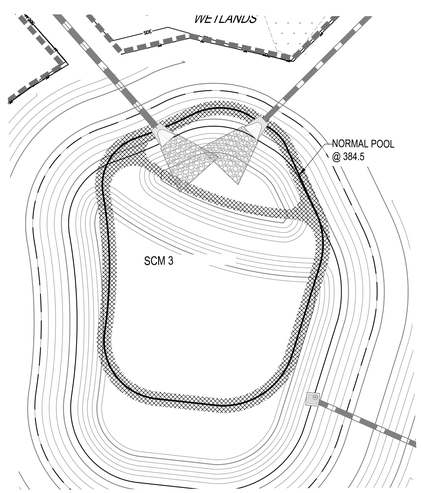

SCM 3 PLANTING CALCULATIONS

NORMAL POOL ELEVATION: 384.5'

VEGETATED SHELF: 2,574 S.F. (0.5' BELOW TO 0.5' ABOVE PERMANENT POND ELEV.)

REQUIRED: .25 PLANTS PER SQUARE FOOT
(3 MINIMUM HERBACEOUS SPECIES)
0.25 PLANTS x 2,574 SF = 644 PLANTS
PROVIDED: (215) HC, (215) LC, (215) CT

SCM 3 PLANTING SCHEDULE

KEY	QTY.	SCIENTIFIC NAME	COMMON NAME	CON.
HC	215	HIBISCUS COCCINEUS	SCARLET ROSE MALLOW	24"Ø x 5" PLUG
LC	215	LOBELIA CARDINALIS	CARDINAL FLOWER	24"Ø x 5" PLUG
CT	215	CAREX TENERA	QUILL SEDGE	24"Ø x 5" PLUG

VEGETATED SHELF MIX

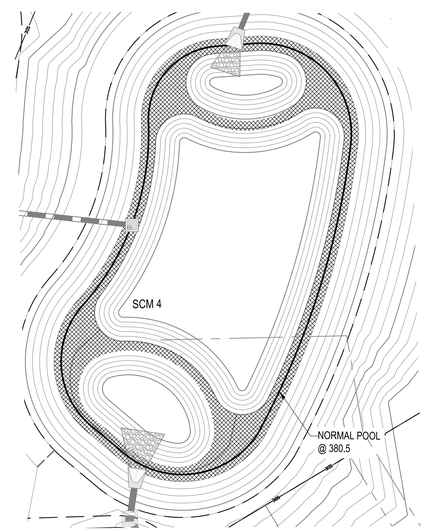

SCM 4 PLANTING CALCULATIONS

NORMAL POOL ELEVATION: 380.5'

VEGETATED SHELF: 4,398 S.F. (0.5' BELOW TO 0.5' ABOVE PERMANENT POND ELEV.)

REQUIRED: .25 PLANTS PER SQUARE FOOT
(3 MINIMUM HERBACEOUS SPECIES)
0.25 PLANTS x 4,398 SF = 1,100 PLANTS
PROVIDED: (367) HC, (367) LC, (367) CT

SCM 4 PLANTING SCHEDULE

KEY	QTY.	SCIENTIFIC NAME	COMMON NAME	CON.
HC	367	HIBISCUS COCCINEUS	SCARLET ROSE MALLOW	24"Ø x 5" PLUG
LC	367	LOBELIA CARDINALIS	CARDINAL FLOWER	24"Ø x 5" PLUG
CT	367	CAREX TENERA	QUILL SEDGE	24"Ø x 5" PLUG

VEGETATED SHELF MIX

N

0 15' 30' 60'
SCALE: 1" = 30'

NOTES:
TREES AND WOODY SHRUBS ARE NOT PERMITTED ON THE DAM OR EMBANKMENT SLOPES AND ANY VOLUNTEERS SHOULD BE REMOVED AS PART OF REGULAR MAINTENANCE ACTIVITIES.
TREES AND SHRUBS MAY BE PLANTED OUTSIDE OF EMBANKMENT SLOPES AND CLEAR FROM MAINTENANCE EASEMENT.

811 Know what's below. Call before you dig.

REV	DATE	DESCRIPTION
1	10/02/2023	PER TOWN OF ROLESVILLE COMMENT
2	08/01/2023	PER TOWN OF ROLESVILLE COMMENT
0	06/01/2023	INITIAL SUBMITTAL

DESIGNED BY: DF/CD
DRAWN BY: DF/JWM
REVIEWED BY: DF

BGE
5440 WADE PARK BLVD, SUITE 102
RALEIGH NC 27607
WWW.BGEINC.COM
NC LICENSE #C-4397

LENNAR CORPORTAION
1100 PERIMETER PARK DRIVE, SUITE 112
MORRISVILLE / NORTH CAROLINA / 27560

PARKER RIDGE
82 SCHOOL STREET
ROLESVILLE / NORTH CAROLINA / 27571

SCM PLANTINGS

NORTH CAROLINA PROFESSIONAL SEAL 028892 ENGINEER DEBRA M. FERN

NOT FOR CONSTRUCTION

FILE NUMBER: 8430-03

DATE: 10/02/2023

L1-7

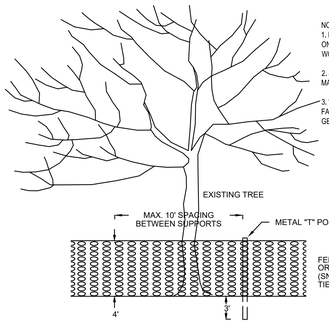

NOTES:
1. PLACE CONTINUOUS RUN OF FENCE MATERIAL ON BOTH SIDES OF IMMEDIATE WORK ZONE IN WOODED AREAS.
2. SET "T" POSTS 3' DEEP WHERE NEEDED TO MAINTAIN MAXIMUM INTERVAL.
3. 'TENSAR' HIGH STRENGTH POLYMER GEOGRID FABRIC BY TENSAR CORPORATION, MORROW, GEORGIA.

* TREE PROTECTION FENCING MUST BE IN PLACE PRIOR TO ANY DEMOLITION, LAND DISTURBANCE OR ISSUANCE OF A GRADING PERMIT AND SHALL INCLUDE WARNING SIGNS POSTED IN BOTH ENGLISH AND SPANISH, AS FOLLOWS: "NO TRESPASSING/TREE PROTECTION AREA/PROHIBIDO ENTRAR/ZONA PROTECTORA PARA LOS ÁRBOLES."

* ROOT PROTECTION ZONE: EQUALS ONE FOOT OF RADIUS FOR EVERY INCH OF DIAMETER OF EXISTING TREES, OR SIX FOOT RADIUS, WHICHEVER IS GREATER. NO DISTURBANCE ALLOWED WITHIN THIS AREA. AREA MUST BE PROTECTED WITH BOTH TREE PROTECTION FENCING AND WARNING SIGNS.

NOTES:
1. WARNING SIGNS SHALL BE MADE OF DURABLE WEATHERPROOF MATERIAL.
2. LETTERS SHALL BE 3" HIGH MINIMUM, CLEARLY LEGIBLE, AND SPACED AS SHOWN.
3. SIGNS ARE TO BE PLACED NO GREATER THAN 75 FT. ON CENTER.
4. PLACE SIGN AT EACH END OF LINEAR TREE PROTECTION AREAS AND 75 FT. ON-CENTER THEREAFTER.
5. FOR TREE PROTECTION AREAS LESS THAN 75 FT. IN PERIMETER, PROVIDE NO LESS THAN ONE SIGN PER AREA.
6. ATTACH SIGNS SECURELY TO FENCE POSTS AND FABRIC.
7. MAINTAIN TREE PROTECTION FENCE THROUGHOUT DURATION OF PROJECT.
8. ADDITIONAL SIGNS MAY BE REQUIRED BASED ON ACTUAL FIELD CONDITIONS.

TREE PROTECTION FENCE DETAIL

NOTES:
1. REMOVE WIRE AND NYLON TWINE FROM BALL AND CANOPY.
2. SOAK ROOT BALL AND PLANT PIT IMMEDIATELY AFTER INSTALLATION.
3. STAKING IS REQUIRED FOR ALL TREES IN R.O.W. OR UPON REQUEST OF ARBORIST.
4. REMOVE EXCESS SOIL FROM SITE AND DISPOSE OF IN A LEGAL MANNER.
5. RESEED UNMULCHED, DISTURBED AREAS.

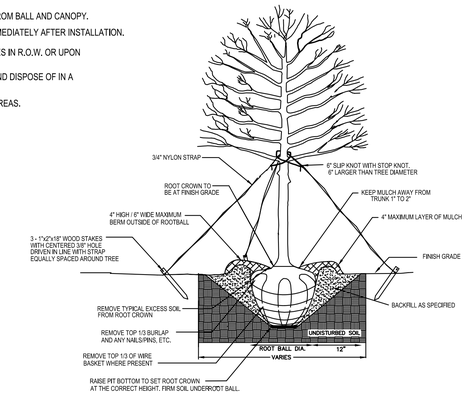

NOT TO SCALE

TREE PLANTING
(FOR SINGLE AND MULTI - STEM TREES)

NOTES:
1. SCARIFY ROOT MASS OF CONTAINERIZED PLANT MATERIAL.
2. INSTALL CONTAINERIZED PLANTS AT FINSHED GRADE.
3. TAMP PLANTING MIX FIRMLY AS PIT IS FILLED AROUND EACH PLANT BALL.
4. OMIT COLLAR AROUND EACH SHRUB WHEN IRRIGATION SYSTEM IS PRESENT.
5. SOAK EACH PLANT BALL AND PIT IMMEDIATELY AFTER INSTALLATION.

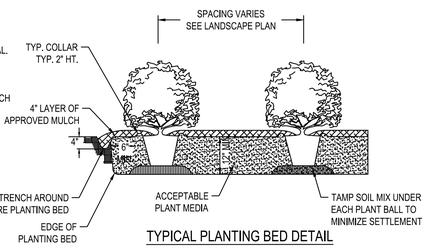

TYPICAL PLANTING BED DETAIL

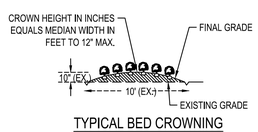

TYPICAL BED CROWNING

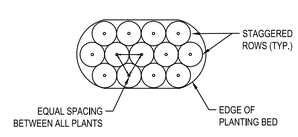

TYPICAL PLANTING BED PLAN

NOT TO SCALE

SHRUB PLANTING BED DETAIL

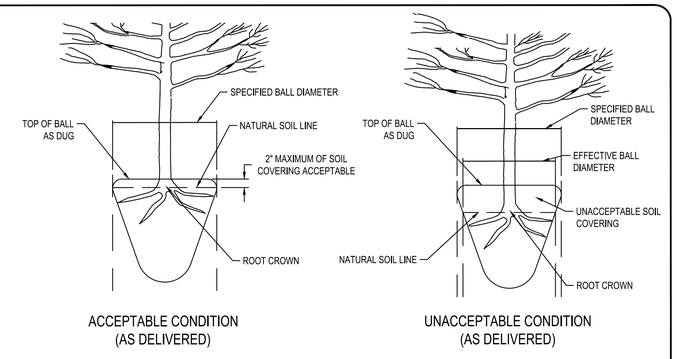

ACCEPTABLE CONDITION
(AS DELIVERED)

UNACCEPTABLE CONDITION
(AS DELIVERED)

NOTE:
A ROOT FLARE EXCAVATION FOR ALL TREES SPECIFIED WILL BE DONE BY THE CITY ARBORIST TO ENSURE THAT TREES WERE NOT PLANTED/GROWN TOO DEEPLY AT SOURCE (NURSERY). LANDSCAPE CONTRACTOR SHALL HAVE SUPPLIER MARK GROUND LEVEL LINE ABOVE ROOT BALL. IF CITY ARBORIST DETERMINES THAT THERE IS EXCESSIVE SOIL OVER THE ROOT CROWN, THESE TREES WILL BE REJECTED.

NOT TO SCALE

ROOT FLARE DEPTHS DETAIL
(TREE ROOT BALL CONDITION ON TREES FROM SUPPLIERS)

Know what's below. Call before you dig.

REV		
1	10/02/2023	PER TOWN OF ROLESVILLE COMMENT
2	08/01/2023	PER TOWN OF ROLESVILLE COMMENT
3	06/01/2023	INITIAL SUBMITTAL

DESIGNED BY: DF/CD
DRAWN BY: DF/JWM
REVIEWED BY: DF

BCE
5440 WADE PARK BLVD, SUITE 102
RALEIGH NC 27607
WWW.BGENC.COM
NC LICENSE #C-4397

LENNAR CORPORTAION
1100 PERIMETER PARK DRIVE, SUITE 112
MORRISVILLE / NORTH CAROLINA / 27560

PARKER RIDGE
82 SCHOOL STREET
ROLESVILLE / NORTH CAROLINA / 27571

LANDSCAPE DETAILS

NORTH CAROLINA REGISTERED LANDSCAPE ARCHITECT No.1155 ROBERT C. ZUMWALT

NOT FOR CONSTRUCTION

FILE NUMBER: 8430-03
DATE: 10/02/2023
L2-0

LEGEND

- PROPERTY / BOUNDARY LINE
- EASEMENT
- PROPOSED CURB AND GUTTER
- WETLANDS
- 50' STREAM BUFFER
- TREE PROTECTION FENCE
- LIMIT OF CONSTRUCTION
- EXISTING TREE CANOPY
- PROPOSED TREE CONSERVATION AREA
- EXISTING STREET TREE
- PRESERVED TREE WITH CRITICAL ROOT ZONE*

*NOTE: CRITICAL ROOT ZONE (1 FT FROM TREE TRUNK FOR EACH 1 INCH OF TREE DIAMETER)
ROOT ZONES SHOWN ONLY FOR TREES NEAR EDGE OF CONSTRUCTION LIMIT / PROTECTION FENCING.

TREE CONSERVATION DATA

EXISTING TREE CANOPY AREA	71.73 AC
TREE CONSERVATION AREA REQUIRED (10% OF EXISTING TREE CANOPY AREA)	7.17 AC
TREE CONSERVATION AREA PROVIDED	18.68 AC (26.04%)

TREE REPLACEMENT

QUALIFYING TREE REMOVED	DBH	REPLACEMENT
SWEET GUM	20 IN.	10 TREES X 2" CAL. = 20 IN.
SWEET GUM	20 IN.	10 TREES X 2" CAL. = 20 IN.
SWEET GUM	21 IN.	11 TREES X 2" CAL. = 22 IN.
RED OAK	19 IN.	10 TREES X 2" CAL. = 20 IN.

N

0 75 150 300
SCALE: 1" = 150

811 Know what's below. Call before you dig.

REV		
1	10/02/2023	PER TOWN OF ROLESVILLE COMMENT
2	08/01/2023	PER TOWN OF ROLESVILLE COMMENT
3	06/01/2023	INITIAL SUBMITTAL

DESIGNED BY: DF/CD
DRAWN BY: DF/JWM
REVIEWED BY: DF

BGE
5440 WADE PARK BLVD, SUITE 102
RALEIGH NC 27607
WWW.BGEINC.COM
NC LICENSE #C-4397

LENNAR CORPORTAION
1100 PERIMETER PARK DRIVE, SUITE 112
MORRISVILLE / NORTH CAROLINA / 27560

PARKER RIDGE
82 SCHOOL STREET
ROLESVILLE / NORTH CAROLINA / 27571

OVERALL TREE CONSERVATION PLAN

NORTH CAROLINA REGISTERED LANDSCAPE ARCHITECT No.1155 ROBERT C. ZUMWALT

NOT FOR CONSTRUCTION

FILE NUMBER: 8430-03

DATE: 10/02/2023

L3-0

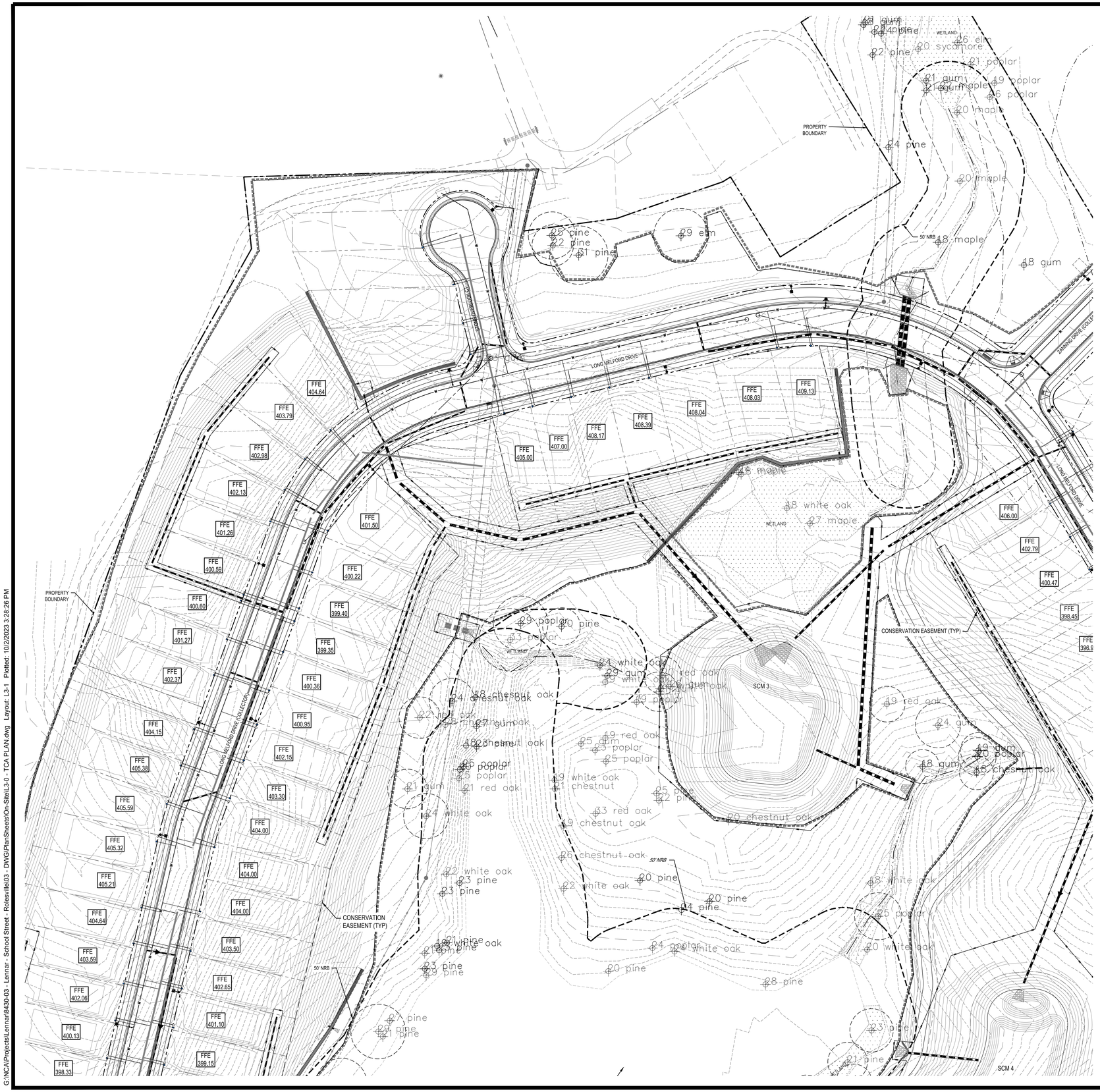

LEGEND

- PROPERTY / BOUNDARY LINE
- EASEMENT
- PROPOSED CURB AND GUTTER
- WETLANDS
- 50' STREAM BUFFER
- TREE PROTECTION FENCE
- LIMIT OF CONSTRUCTION
- EXISTING TREE CANOPY
- PROPOSED TREE CONSERVATION AREA
- EXISTING STREET TREE
- PRESERVED TREE WITH CRITICAL ROOT ZONE*

*NOTE: CRITICAL ROOT ZONE (1 FT FROM TREE TRUNK FOR EACH 1 INCH OF TREE DIAMETER)

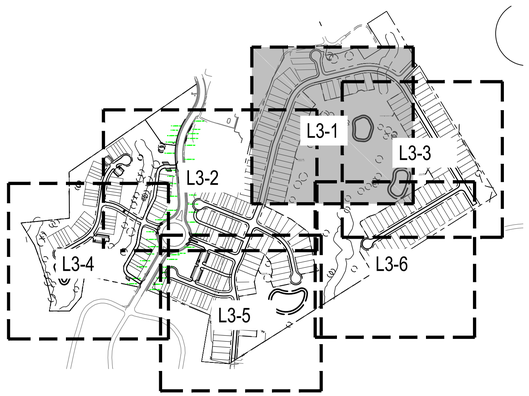

N

0 75 150 300

SCALE: 1" = 150

811 Know what's below. Call before you dig.

REV	DATE	DESCRIPTION
1	10/02/2023	PER TOWN OF ROLESVILLE COMMENT
2	08/01/2023	PER TOWN OF ROLESVILLE COMMENT
REV	06/01/2023	INITIAL SUBMITTAL

DESIGNED BY: DF/CD

DRAWN BY: DF/JWM

REVIEWED BY: DF

BGE
5440 WADE PARK BLVD, SUITE 102
RALEIGH NC 27607
WWW.BGEINC.COM
NC LICENSE #C-4397

LENNAR CORPORTAION
1100 PERIMETER PARK DRIVE, SUITE 112
MORRISVILLE / NORTH CAROLINA / 27560

PARKER RIDGE
82 SCHOOL STREET
ROLESVILLE / NORTH CAROLINA / 27571

ENLARGED TCA PLAN (1 OF 6)

NORTH CAROLINA REGISTERED No.1155 LANDSCAPE ARCHITECT ROBERT C. ZUMWALT

NOT FOR CONSTRUCTION

FILE NUMBER: 8430-03

DATE: 10/02/2023

L3-1

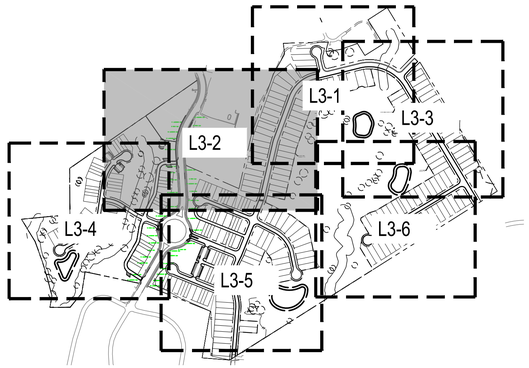

LEGEND

- PROPERTY / BOUNDARY LINE
- EASEMENT
- PROPOSED CURB AND GUTTER
- WETLANDS
- 50' STREAM BUFFER
- TREE PROTECTION FENCE
- LIMIT OF CONSTRUCTION
- EXISTING TREE CANOPY
- PROPOSED TREE CONSERVATION AREA
- EXISTING STREET TREE
- PRESERVED TREE WITH CRITICAL ROOT ZONE*

Know what's below. Call before you dig.

REV	DATE	DESCRIPTION
1	10/02/2023	PER TOWN OF ROLESVILLE COMMENT
2	08/01/2023	PER TOWN OF ROLESVILLE COMMENT
3	06/01/2023	INITIAL SUBMITTAL

DESIGNED BY: DF/CD
DRAWN BY: DF/JWM
REVIEWED BY: DF

BGE
5440 WADE PARK BLVD, SUITE 102
RALEIGH NC 27607
WWW.BGEINC.COM
NC LICENSE #C-4397

LENNAR CORPORTAION
1100 PERIMETER PARK DRIVE, SUITE 112
MORRISVILLE / NORTH CAROLINA / 27560

PARKER RIDGE
82 SCHOOL STREET
ROLESVILLE / NORTH CAROLINA / 27571

ENLARGED TCA PLAN (2 OF 6)

NORTH CAROLINA REGISTERED No.1155 LANDSCAPE ARCHITECT ROBERT C. ZUMWALT

NOT FOR CONSTRUCTION

FILE NUMBER: 8430-03

DATE: 10/02/2023

L3-2

G:\NCA\Projects\Lennar\8430-03 - Lennar - School Street - Rolesville\03 - DWG\PlanSheets\On-Site\L3-0 - TCA PLAN.dwg Layout: L3-2 Plotted: 10/2/2023 3:28:37 PM

(3) SWEET GUMS TO BE REMOVED FROM PERIMETER BUFFER. SEE LANDSCAPE PLAN FOR REPLACEMENT TREES.

PROPERTY BOUNDARY

NOTE: DASHED POND EXTENTS PER GIS

EXISTING POND

LAKE

CONSERVATION EASEMENT (TYP)

SCM 3

SCM 4

50' NRB

WETLAND

ZANNING DRIVE (COLLECTOR)

LONGFIELD POND DRIVE

LONGFIELD CIRCLE DRIVE

QUARRY POND DR

LEGEND

- PROPERTY / BOUNDARY LINE
- EASEMENT
- PROPOSED CURB AND GUTTER
- WETLANDS
- 50' STREAM BUFFER
- TREE PROTECTION FENCE
- LIMIT OF CONSTRUCTION
- EXISTING TREE CANOPY
- PROPOSED TREE CONSERVATION AREA
- EXISTING STREET TREE
- PRESERVED TREE WITH CRITICAL ROOT ZONE*

N

0 75 150 300

SCALE: 1" = 150

811 Know what's below. Call before you dig.

REV		
1	10/02/2023	PER TOWN OF ROLESVILLE COMMENT
2	08/01/2023	PER TOWN OF ROLESVILLE COMMENT
3	06/01/2023	INITIAL SUBMITTAL

DESIGNED BY: DF/CD

DRAWN BY: DF/JWM

REVIEWED BY: DF

BGE
5440 WADE PARK BLVD, SUITE 102
RALEIGH NC 27607
WWW.BGEINC.COM
NC LICENSE #C-4397

LENNAR CORPORTAION
1100 PERIMETER PARK DRIVE, SUITE 112
MORRISVILLE / NORTH CAROLINA / 27560

PARKER RIDGE
82 SCHOOL STREET
ROLESVILLE / NORTH CAROLINA / 27571

ENLARGED TCA PLAN
(3 OF 6)

NORTH CAROLINA REGISTERED LANDSCAPE ARCHITECT No.1155 ROBERT C. ZUMWALT

NOT FOR CONSTRUCTION

FILE NUMBER: 8430-03

DATE: 10/02/2023

L3-3

G:\NCA\Projects\Lennar\8430-03 - Lennar - School Street - Rolesville\03 - DWG\PlanSheets\On-Site\L3-0 - TCA PLAN.dwg Layout: L3-3 Plotted: 10/2/2023 3:28:51 PM

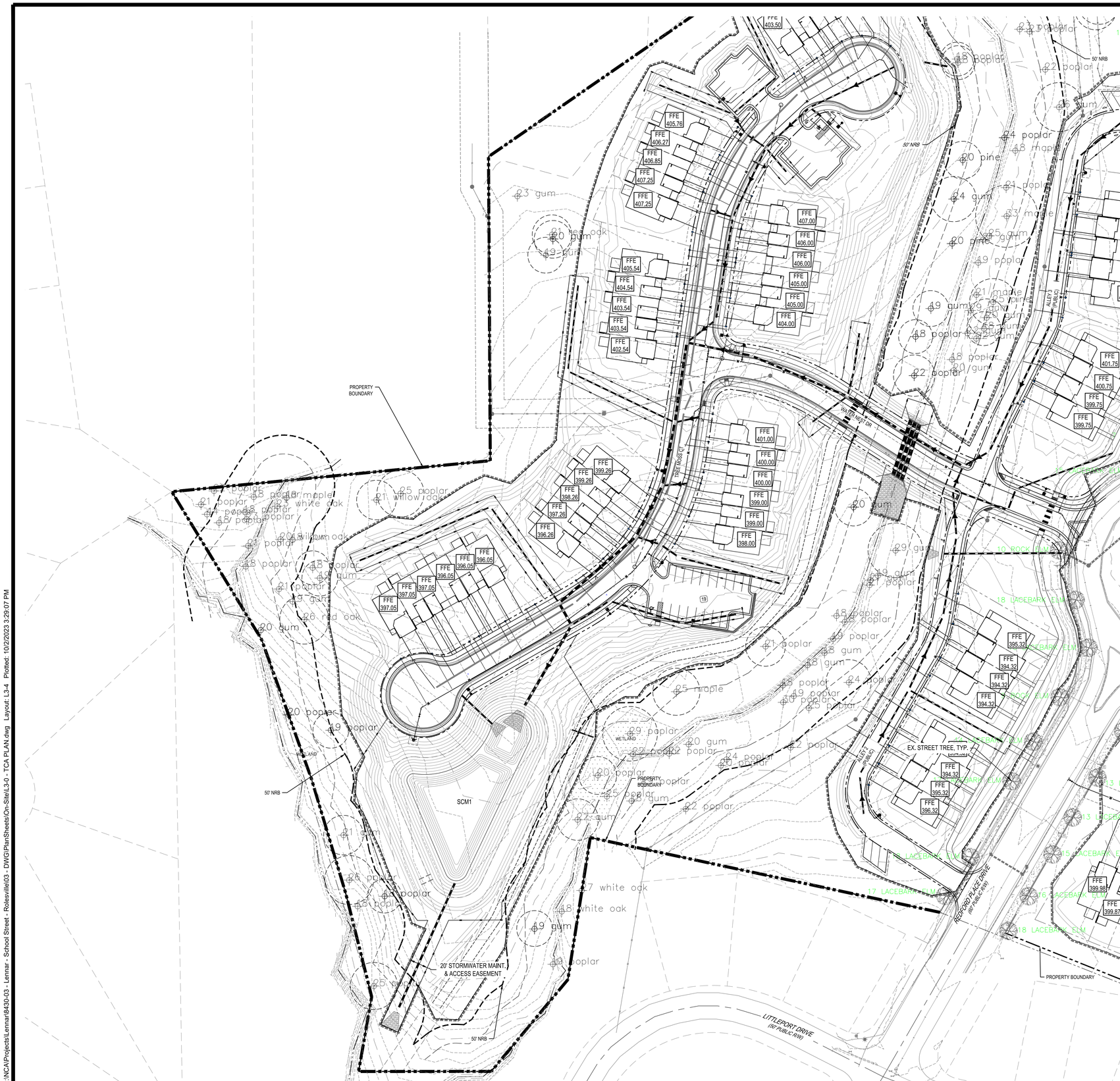

LEGEND

- PROPERTY / BOUNDARY LINE
- EASEMENT
- PROPOSED CURB AND GUTTER
- WETLANDS
- 50' STREAM BUFFER
- TREE PROTECTION FENCE
- LIMIT OF CONSTRUCTION
- EXISTING TREE CANOPY
- PROPOSED TREE CONSERVATION AREA
- EXISTING STREET TREE
- PRESERVED TREE WITH CRITICAL ROOT ZONE*

*NOTE: CRITICAL ROOT ZONE 1' FT FROM TREE TRUNK FOR

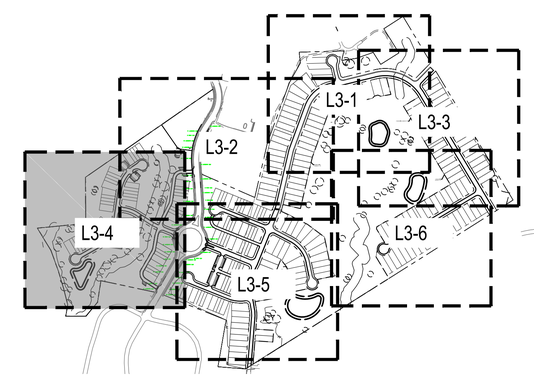

N

0 75 150 300

SCALE: 1" = 150

811 Know what's below. Call before you dig.

REV	DATE	DESCRIPTION
1	10/02/2023	PER TOWN OF ROLESVILLE COMMENT
0	08/01/2023	PER TOWN OF ROLESVILLE COMMENT
	06/01/2023	INITIAL SUBMITTAL

DESIGNED BY: DF/CD

DRAWN BY: DF/JWM

REVIEWED BY: DF

BGE
5440 WADE PARK BLVD, SUITE 102
RALEIGH NC 27607
WWW.BGEINC.COM
NC LICENSE #C-4397

LENNAR CORPORTAION
1100 PERIMETER PARK DRIVE, SUITE 112
MORRISVILLE / NORTH CAROLINA / 27560

PARKER RIDGE
82 SCHOOL STREET
ROLESVILLE / NORTH CAROLINA / 27571

ENLARGED TCA PLAN
(4 OF 6)

NORTH CAROLINA REGISTERED LANDSCAPE ARCHITECT No.1155 ROBERT C. ZUMWALT

NOT FOR CONSTRUCTION

FILE NUMBER: 8430-03

DATE: 10/02/2023

L3-4

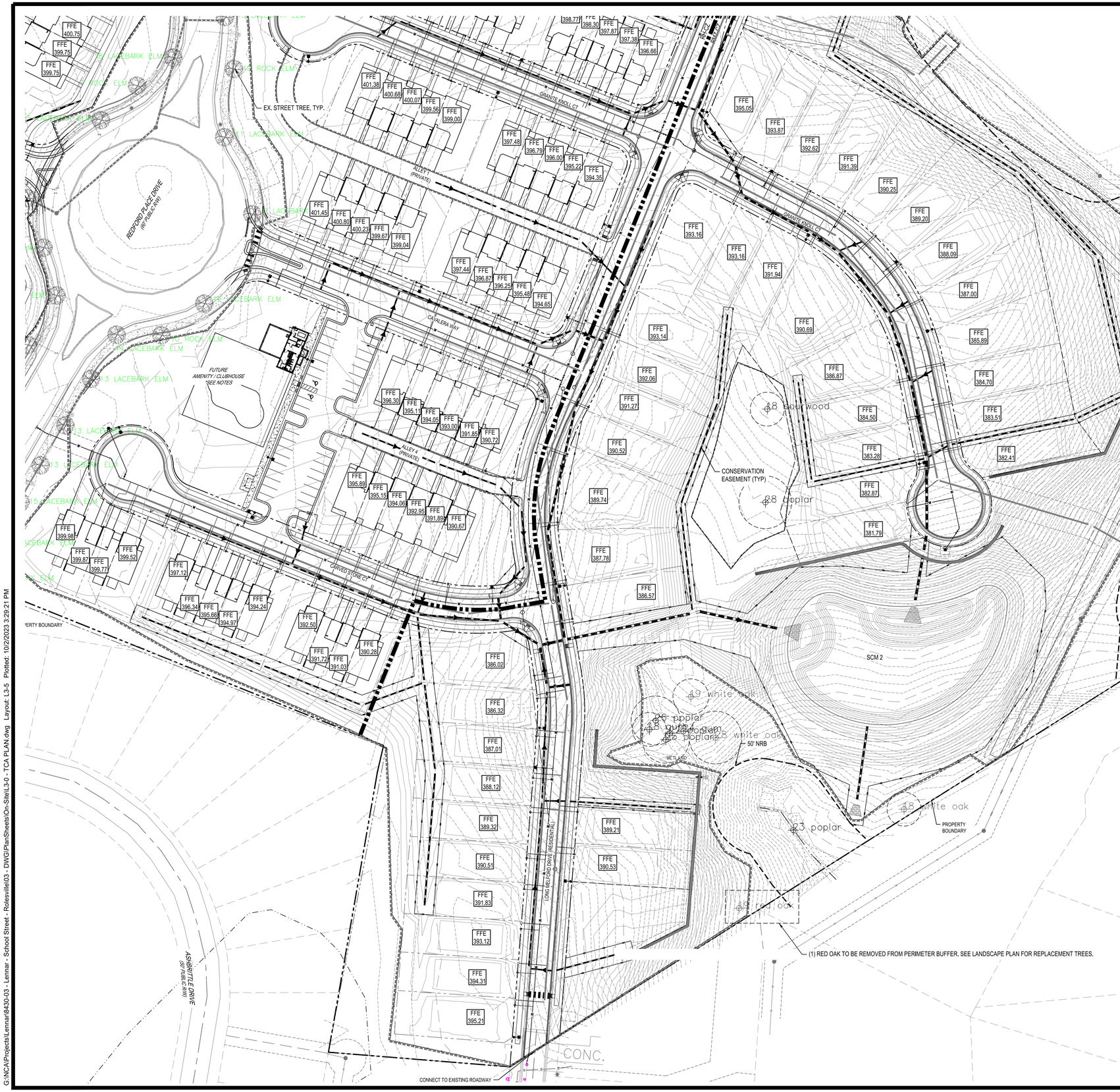

LEGEND

- PROPERTY / BOUNDARY LINE
- EASEMENT
- PROPOSED CURB AND GUTTER
- WETLANDS
- 50' STREAM BUFFER
- TREE PROTECTION FENCE
- LIMIT OF CONSTRUCTION
- EXISTING TREE CANOPY
- PROPOSED TREE CONSERVATION AREA
- EXISTING STREET TREE
- PRESERVED TREE WITH CRITICAL ROOT ZONE*

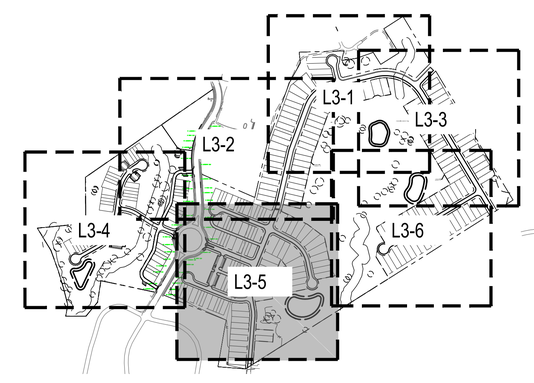

N

0 75 150 300
SCALE: 1" = 150

811
Know what's below.
Call before you dig.

REV	DATE	DESCRIPTION
1	10/02/2023	PER TOWN OF ROLESVILLE COMMENT
2	08/01/2023	PER TOWN OF ROLESVILLE COMMENT
3	06/01/2023	INITIAL SUBMITTAL

DESIGNED BY: DF/CD
DRAWN BY: DF/JWM
REVIEWED BY: DF

BGE
5440 WADE PARK BLVD, SUITE 102
RALEIGH NC 27607
WWW.BGEINC.COM
NC LICENSE #C-4397

LENNAR CORPORTAION
1100 PERIMETER PARK DRIVE, SUITE 112
MORRISVILLE / NORTH CAROLINA / 27560

PARKER RIDGE
82 SCHOOL STREET
ROLESVILLE / NORTH CAROLINA / 27571

ENLARGED TCA PLAN
(5 OF 6)

NORTH CAROLINA REGISTERED LANDSCAPE ARCHITECT No.1155 ROBERT C. ZUMWALT

NOT FOR CONSTRUCTION

FILE NUMBER: 8430-03

DATE: 10/02/2023

L3-5

LEGEND

- PROPERTY / BOUNDARY LINE
- EASEMENT
- PROPOSED CURB AND GUTTER
- WETLANDS
- 50' STREAM BUFFER
- TREE PROTECTION FENCE
- LIMIT OF CONSTRUCTION
- EXISTING TREE CANOPY
- PROPOSED TREE CONSERVATION AREA
- EXISTING STREET TREE
- PRESERVED TREE WITH CRITICAL ROOT ZONE*

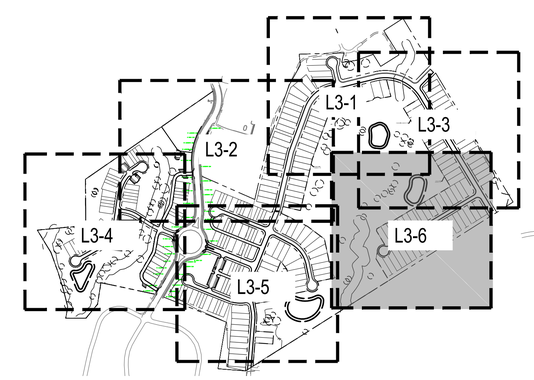

N

0 75 150 300

SCALE: 1" = 150

811 Know what's below. Call before you dig.

REV	DATE	DESCRIPTION
1	10/02/2023	PER TOWN OF ROLESVILLE COMMENT
2	08/01/2023	PER TOWN OF ROLESVILLE COMMENT
3	06/01/2023	INITIAL SUBMITTAL

DESIGNED BY: DF/CD

DRAWN BY: DF/JWM

REVIEWED BY: DF

BGE
5440 WADE PARK BLVD, SUITE 102
RALEIGH NC 27607
WWW.BGEINC.COM
NC LICENSE #C-4397

LENNAR CORPORTAION
1100 PERIMETER PARK DRIVE, SUITE 112
MORRISVILLE / NORTH CAROLINA / 27560

PARKER RIDGE
82 SCHOOL STREET
ROLESVILLE / NORTH CAROLINA / 27571

ENLARGED TCA PLAN (6 OF 6)

NORTH CAROLINA REGISTERED No.1155 LANDSCAPE ARCHITECT ROBERT C. ZUMWALT

NOT FOR CONSTRUCTION

FILE NUMBER: 8430-03

DATE: 10/02/2023

L3-6