V4 - CID-23-06 -- part 4 of 4

RH DISTRICT OPEN SPACE CALCULATIONS		
RH DISTRICT AREA	27.50	AC
REQUIRED OPEN SPACE (15%)	4.13	AC
PROVIDED OPEN SPACE	10.97	AC
REQUIRED ACTIVE OPEN SPACE (50% OF OPEN SPACE)	2.06	AC
PROVIDED ACTIVE OPEN SPACE	2.13	AC
REQUIRED PASSIVE OPEN SPACE	2.06	AC
PROVIDED PASSIVE OPEN SPACE	8.84	AC
MAXIMUM NATURAL RESOURCE AREA ALLOWED (20% OF PASSIVE OPEN SPACE)	1.77	AC
NATURAL RESOURCE AREA INCLUDED	0.10	AC

OPEN SPACE #	CATEGORY	TOTAL AREA (AC)	NATURAL RESOURCE AREA (AC)	SIZE CLASSIFICATION	TYPE	PROGRAM ELEMENTS
4A	PASSIVE	0.59	0	SMALL	N/A	N/A
4B	ACTIVE	0.7	0	SMALL	AMENITY CENTER	POOL/POOL HOUSE, LAWN GAMES
5	PASSIVE	0.85	0	SMALL	N/A	N/A
6	PASSIVE	1.12	0	MEDIUM	N/A	N/A
7A	PASSIVE	6.28	0.1	LARGE	N/A	N/A
7B	ACTIVE	0.26	0	SMALL	POCKET PARK	DOG PARK, BENCHES
7C	ACTIVE	1.08	0	MEDIUM	NEIGHBORHOOD PARK	TOWN OF ROLESVILLE TO PROGRAM
7D	ACTIVE	0.09	0	SMALL	POCKET PARK	TOT LOT, BENCHES

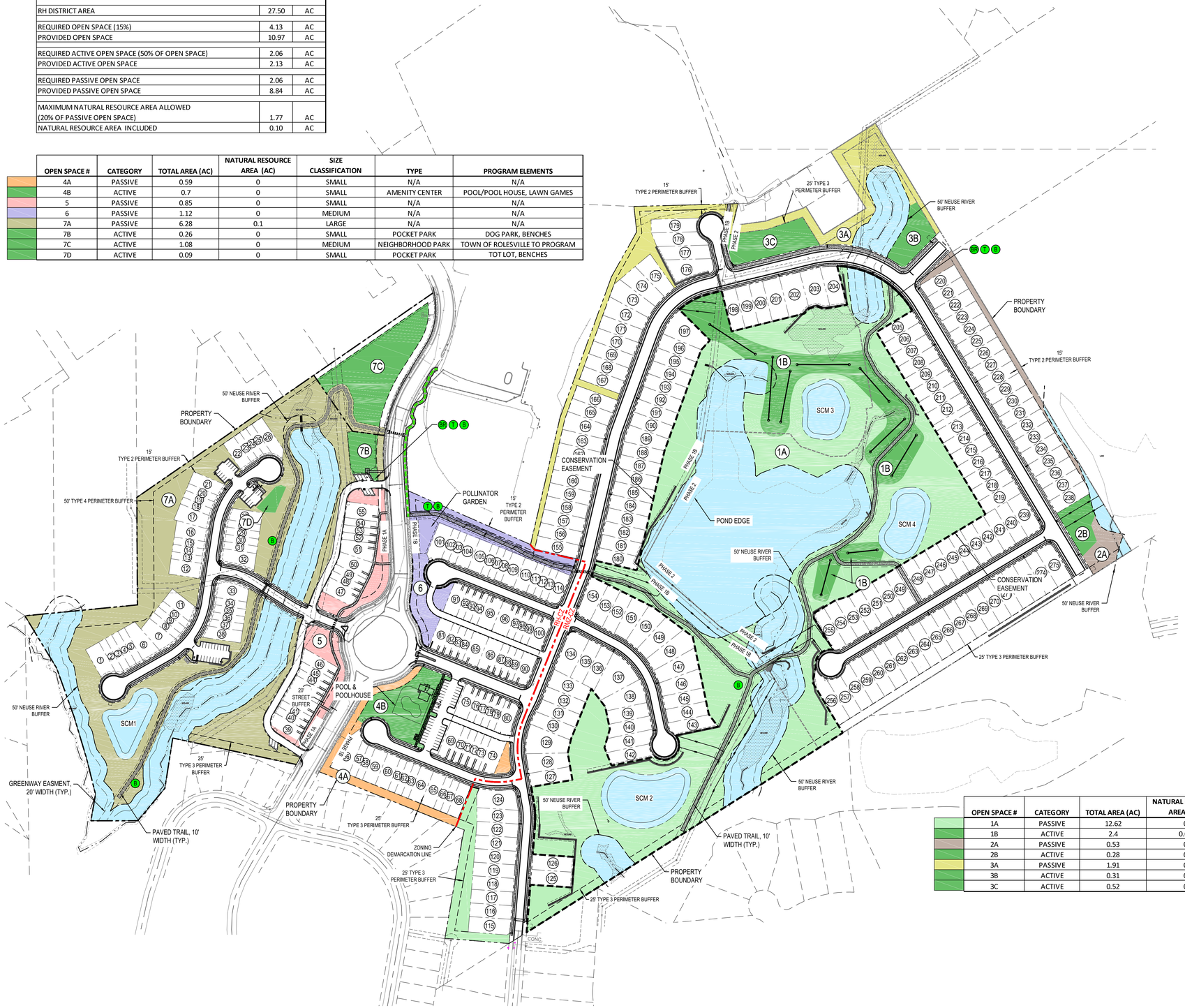

LEGEND

- NATURAL RESOURCE / SCM AREAS (NOT COUNTED TOWARD OPEN SPACE)
- PROPOSED FUTURE GREENWAY CONNECTION
- RM CLUSTER CONSERVATION EASEMENT (CONTAINS 24.98 CONTIGUOUS ACRES OF OPEN SPACE)
- PHASE LINES
- DISC GOLF HOLE
- T TRASH RECEPTACLE
- B BENCH (PUBLIC SEATING)
- BR BIKE RACK

RM CLUSTER CONSERVATION EASEMENT OPEN SPACE		
REQUIRED CLUSTER DEVELOPMENT OPEN SPACE (40%) (DEDICATED IN CONSERVATION EASEMENT)	23.16	AC
PROVIDED CLUSTER DEVELOPMENT OPEN SPACE (DEDICATED IN CONSERVATION EASEMENT)	24.98	AC

RM CLUSTER DISTRICT OPEN SPACE CALCULATIONS		
RM CLUSTER DISTRICT AREA	57.89	AC
REQUIRED TOTAL OPEN SPACE (12%)	6.95	AC
PROVIDED TOTAL OPEN SPACE	18.57	AC
REQUIRED ACTIVE OPEN SPACE (50% OF REQUIRED OPEN SPACE)	3.47	AC
PROVIDED ACTIVE OPEN SPACE	3.51	AC
REQUIRED PASSIVE OPEN SPACE	3.47	AC
PROVIDED PASSIVE OPEN SPACE	15.06	AC
MAXIMUM NATURAL RESOURCE AREA ALLOWED (20% OF PASSIVE OPEN SPACE)	3.01	AC
NATURAL RESOURCE AREA INCLUDED	0.04	AC
MAXIMUM STORM POND AREA ALLOWED (5% OF PASSIVE OPEN SPACE)	0.75	AC
STORM POND AREA INCLUDED	0.00	AC

OPEN SPACE #	CATEGORY	TOTAL AREA (AC)	NATURAL RESOURCE AREA (AC)	SIZE CLASSIFICATION	TYPE	PROGRAM ELEMENTS
1A	PASSIVE	12.62	0	LARGE	N/A	N/A
1B	ACTIVE	2.4	0.04	MEDIUM	NEIGHBORHOOD PARK	DISC GOLF COURSE, OUTDOOR FITNESS
2A	PASSIVE	0.53	0	SMALL	N/A	N/A
2B	ACTIVE	0.28	0	SMALL	POCKET PARK	OUTDOOR FITNESS
3A	PASSIVE	1.91	0	LARGE	N/A	N/A
3B	ACTIVE	0.31	0	SMALL	POCKET PARK	LAWN GAMES
3C	ACTIVE	0.52	0	SMALL	POCKET PARK	PLAYGROUND / TOT LOT

N

0 75 150 300
SCALE: 1" = 150

811 Know what's below. Call before you dig.

REV	DATE	DESCRIPTION
1	11/21/2023	PER TOWN OF ROLESVILLE COMMENT
2	10/02/2023	PER TOWN OF ROLESVILLE COMMENT
3	08/01/2023	PER TOWN OF ROLESVILLE COMMENT
4	06/01/2023	INITIAL SUBMITTAL

DESIGNED BY: MC/RZ
DRAWN BY: MC
REVIEWED BY: RZ

BGE
5440 WADE PARK BLVD, SUITE 102
RALEIGH NC 27607
WWW.BGEINC.COM
NC LICENSE #C-4397

LENNAR CORPORTAION
1100 PERIMETER PARK DRIVE, SUITE 112
MORRISVILLE / NORTH CAROLINA / 27560

PARKER RIDGE
82 SCHOOL STREET
ROLESVILLE / NORTH CAROLINA / 27571

OPEN SPACE PLAN

NORTH CAROLINA REGISTERED LANDSCAPE ARCHITECT No.1155 ROBERT C. ZUMWALT

NOT FOR CONSTRUCTION

FILE NUMBER: 8430-03

DATE: 11/21/2023

C9-0

G:\NCA\Projects\Lennar\8430-03 - Lennar - School Street - Rolesville\03 - DWG\PlanSheets\On-Site\C7-0 - OPEN SPACE PLAN.dwg Layout: C9-0 OPEN SPACE PLAN Plotted: 12/1/2023 2:31:39 PM

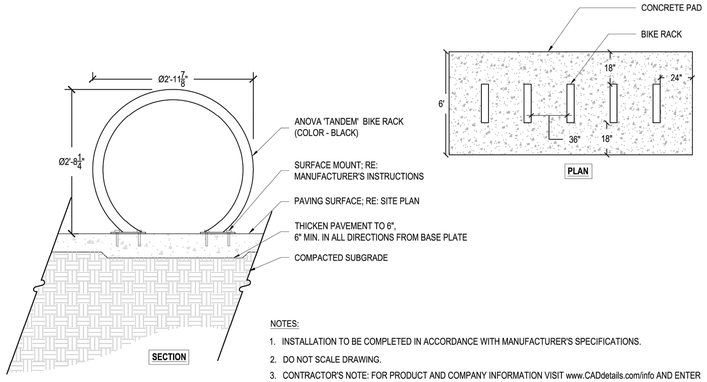

NOTES:

1. INSTALLATION TO BE COMPLETED IN ACCORDANCE WITH MANUFACTURER'S SPECIFICATIONS.
2. DO NOT SCALE DRAWING.
3. CONTRACTOR'S NOTE: FOR PRODUCT AND COMPANY INFORMATION VISIT www.CADdetails.com/info AND ENTER REFERENCE NUMBER 928-359

1 BIKE RACK — SECTION

SCALE: NTS

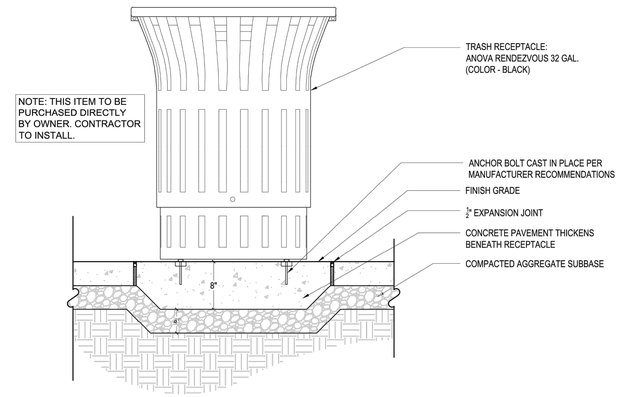

2 WASTE RECEPTACLE — SECTION

SCALE: NTS

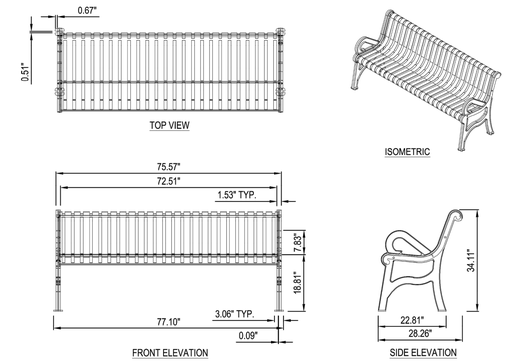

NOTES:

1. PRODUCT INFORMATION: ANOVA RENDEZVOUS 6' CONTOUR BENCH.
2. COLOR: BLACK POWDERCOAT
3. INSTALLATION TO BE COMPLETED IN ACCORDANCE WITH MANUFACTURER'S SPECIFICATIONS.
4. DO NOT SCALE DRAWING.
5. THIS DRAWING IS INTENDED FOR USE BY ARCHITECTS, ENGINEERS, CONTRACTORS, CONSULTANTS AND DESIGN PROFESSIONALS FOR PLANNING PURPOSES ONLY. THIS DRAWING MAY NOT BE USED FOR CONSTRUCTION.
6. ALL INFORMATION CONTAINED HEREIN WAS CURRENT AT THE TIME OF DEVELOPMENT BUT MUST BE REVIEWED AND APPROVED BY THE PRODUCT MANUFACTURER TO BE CONSIDERED ACCURATE.
7. CONTRACTOR'S NOTE: FOR PRODUCT AND COMPANY INFORMATION VISIT www.CADdetails.com/info AND ENTER
8. REFERENCE NUMBER

3 BENCH — SECTION

SCALE: NTS

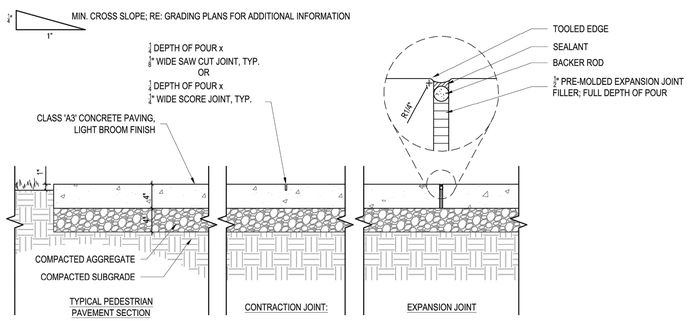

NOTES:

1. PROVIDE EXPANSION JOINT WHERE WALKS ARE POURED AGAINST VERTICAL SURFACES AND/OR DIFFERENT PAVING MATERIALS AND AS SPECIFIED ON PLANS OR 25'-0" MAX. O.C.
2. PROVIDE CONTRACTION JOINT AT 5' INTERVALS UNLESS OTHERWISE NOTED (SEE PLAN). CONTRACTOR TO PROVIDE MOCK-UP OF CONCRETE SIDEWALK SCORING FOR LANDSCAPE ARCHITECTS APPROVAL. MOCK-UP CAN BE USED AS PART OF FINAL PROJECT.

4 PEDESTRIAN CONCRETE PAVING — SECTION

SCALE: 1' = 1'-0"

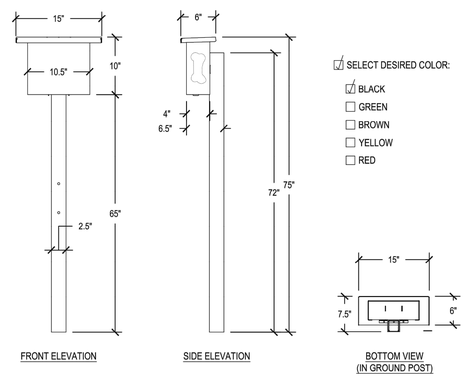

☑ SELECT DESIRED COLOR:

- ☑ BLACK
- ☐ GREEN
- ☐ BROWN
- ☐ YELLOW
- ☐ RED

STANDARD FEATURES:
-EXCLUSIVE PRODUCT TO GYMS FOR DOGS™ AND LIVIN THE DOG LIFE™.
-ARCHITECTURAL PET WASTE BAG DISPENSER/ALUMINUM BAG DISPENSER (MADE IN U.S.A.).
-TOP SHELF HOLDS KEYS, CELL PHONES & LEASHES.
-HEAVY-DUTY ONE PIECE ALUMINUM MOUNTING POST.
-POWDER-COATED PROPRIETARY ALL-WEATHER ALUMINUM.
-BAG DISPENSER WITH "BONE" DISPENSER HOLE.
-600 BAG CAPACITY - UNIVERSAL TO MOST BRANDS OF BAGS.
-CAN BE CUSTOMIZED WITH YOUR BRAND OR SPECIAL LOGO.

PRODUCT DIMENSIONS:
DIMENSIONS: H: 51" X W: 6" X L: 15"
RECOMMENDED SPECIFICATIONS:
ALUMINUM BAG DISPENSER:
-H: 10" X W: 4" X L: 10.5"
-600 BAG CAPACITY
-BONE SHAPED BAG DISPENSER SLOT
ALUMINUM BAG DISPENSER TOP SHELF:
-W: 6" X L: 15"
ALUMINUM IN GROUND MOUNTED POST:
-H: 72" W: 12" X L: 12"

NOTES:
1. INSTALLATION TO BE COMPLETED IN ACCORDANCE WITH MANUFACTURER'S SPECIFICATIONS.
2. DO NOT SCALE DRAWING.
3. THIS DRAWING IS INTENDED FOR USE BY ARCHITECTS, ENGINEERS, CONTRACTORS, CONSULTANTS AND DESIGN PROFESSIONALS FOR PLANNING PURPOSES ONLY. THIS DRAWING MAY NOT BE USED FOR CONSTRUCTION.
4. ALL INFORMATION CONTAINED HEREIN WAS CURRENT AT THE TIME OF DEVELOPMENT BUT MUST BE REVIEWED AND APPROVED BY THE PRODUCT MANUFACTURER TO BE CONSIDERED ACCURATE.

5 PET WASTE STATION — SECTION

SCALE: 1/2" = 1'-0"

DGA MACH III™ PERMANENT DISC GOLF BASKET SPECIFICATION SHEET

A True Legend.The Mach III disc golf basket has been played on in more disc golf tournament rounds than any other basket. This speaks to the quality and performance of this battle tested basket.

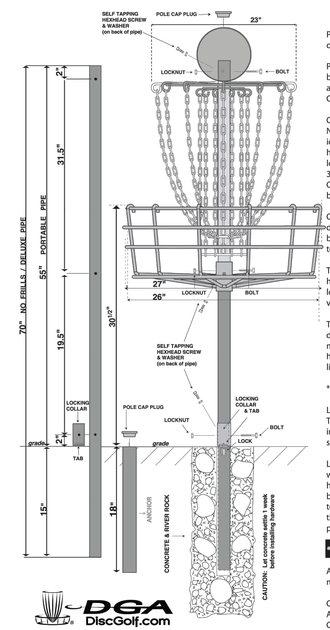

POLE (70 in.) - 1 1/2 in. I.D., 1 15/16 in. O.D. hot-dipped galvanized pipe, drilled.

POLES - The holes closest to one end of the pole are for the Chain Assembly. This end should also have a red Pole Cap Plug. The middle set of holes are for the Basket Assembly. The bottom set of holes are for the Locking Collar for Deluxe Disc Pole Hole.

CHAIN ASSEMBLY - Welded and hot dipped galvanized.
Number Plate - 10 gauge steel, 8 in. diameter. Decal - vinyl numbers and identification cover. Sleeve (6 in.) - 115/16 in. O.D. pipe, drilled. Bolt, hex head nut and nylon insert locknut, hex head tec screw, internal tooth star lock washer, (will not vibrate loose like one-way screws). Rod Assembly - 3/8 in. steel rod.
Chain - 12 outer/12 inner chains, 500 lb. test, all hooked to Chain Assembly with heavy duty "5" Hooks to allow freer movement of Chains.

CHAIN ASSEMBLY INSTRUCTIONS - Slide Chain Assembly, (ring first), down pole. Align holes in collar with holes at top of pole. Fasten with bolt, hex head nut and nylon insert locknut, hex head tec screw, internal tooth star lock washer, (will not vibrate loose like one-way screws).

TRAPPER BASKET 2 ASSEMBLY - 3/8 inch steel rod, welded and hot-dipped galvanized. 6" Sleeve - bolt, hex head nut and nylon insert locknut, hex head tec screw, internal tooth star lock washer, (will not vibrate loose like one-way screws).

TRAPPER BASKET 2 ASSEMBLY INSTRUCTIONS - Slide Basket Assembly down pole, (basket facing up), until holes in collar align with holes in middle of pole. Fasten with bolt, hex head nut and nylon insert locknut, hex head tec screw, internal tooth star lock washer, (will not vibrate loose like one-way screws).

*DELUXE DISC POLE HOLE ONLY

LOCKING COLLAR - Welded and hot-dipped galvanized. 4" Collar- 2 1/8" Tubing. Bolt, hex head nut and nylon insert locknut, hex head tec screw, internal tooth star lock washer, (will not vibrate loose like one-way screws).

LOCKING COLLAR ASSEMBLY INSTRUCTIONS - Slide the locking collar, with the locking tab at the bottom of collar, up pole to bottom set of holes. Align holes in locking collar with holes in pole and fasten with bolt,hex head nut and nylon insert locknut, hex head tec screw, internal tooth star lock washer, (will not vibrate loose like one-way screws). After the locking collar is fastened, the pole can be placed in anchor to complete installation.

Note: The LOCKING TAB should always be painting at the tee.

ANCHOR -18 in. x 2 1/8 in. O.D. pipe, drilled. Install flush to ground with matching Locking Tab aiming at the tee.

CONCRETE & RIVER ROCK (Used to stabilize Anchor until cement sets) - Approximately 1 cubic foot (concrete, river rock and lock not furnished). CAUTION: Let concrete settle 1 week before installing hardware.

7 DISC GOLF BASKET — SECTION

N.T.S.

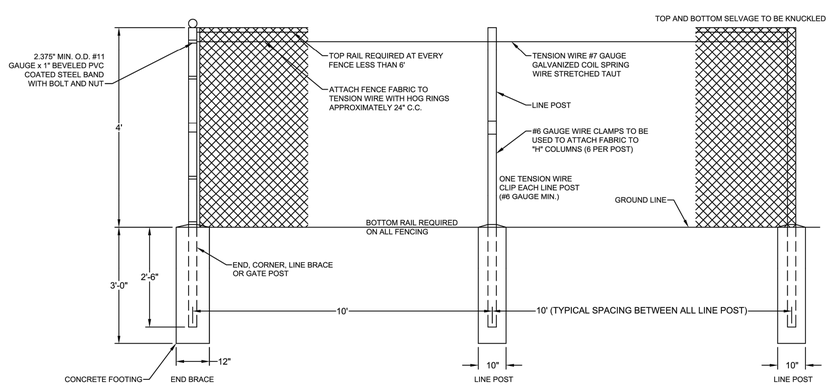

6 BLACK PVC CLAD CHAIN LINK FENCE — SECTION

N.T.S.

811 Know what's below. Call before you dig.

REV	DATE	DESCRIPTION
1	11/21/2023	PER TOWN OF ROLESVILLE COMMENT
2	10/02/2023	PER TOWN OF ROLESVILLE COMMENT
3	08/01/2023	PER TOWN OF ROLESVILLE COMMENT
4	06/01/2023	INITIAL SUBMITTAL

DESIGNED BY: MC/RZ
DRAWN BY: MC
REVIEWED BY: RZ

BGE
5440 WADE PARK BLVD, SUITE 102
RALEIGH NC 27607
WWW.BGEINC.COM
NC LICENSE #C-4397

LENNAR CORPORTAION
1100 PERIMETER PARK DRIVE, SUITE 112
MORRISVILLE / NORTH CAROLINA / 27560

PARKER RIDGE
82 SCHOOL STREET
ROLESVILLE / NORTH CAROLINA / 27571

OPEN SPACE DETAILS (1 OF 2)

NORTH CAROLINA REGISTERED LANDSCAPE ARCHITECT No.1155 ROBERT C. ZUMWALT

NOT FOR CONSTRUCTION

FILE NUMBER: 8430-03

DATE: 11/21/2023

C9-1

OUTDOOR FITNESS STATION DETAILS

1 CHIN-UP STATION
SCALE: 1" = 1'-0"

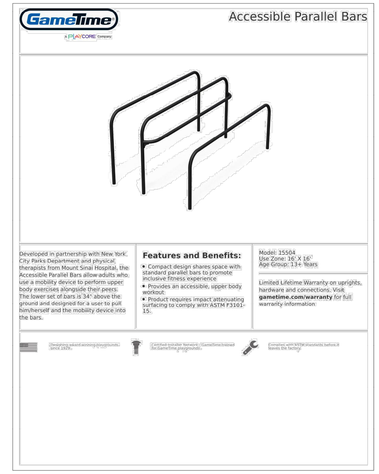

2 ACCESSIBLE PARALLEL BAR
SCALE: 1" = 1'-0"

3 CAPTAIN'S CHAIR
SCALE: 1" = 1'-0"

4 PUSH-UP STATION
SCALE: 1" = 1'-0"

5 SIT-UP STATION
SCALE: 1" = 1'-0"

6 STEP-UP STATION
SCALE: 1" = 1'-0"

REV		
06/01/2023	INITIAL SUBMITTAL	
08/01/2023	PER TOWN OF ROLESVILLE COMMENT	
10/02/2023	PER TOWN OF ROLESVILLE COMMENT	
11/21/2023	PER TOWN OF ROLESVILLE COMMENT	

DESIGNED BY: MC/RZ
DRAWN BY: MC
REVIEWED BY: RZ

BGE
5440 WADE PARK BLVD, SUITE 102
RALEIGH NC 27607
WWW.BGEINC.COM
NC LICENSE #C-4397

LENNAR CORPORTAION
1100 PERIMETER PARK DRIVE, SUITE 112
MORRISVILLE / NORTH CAROLINA / 27560

PARKER RIDGE
82 SCHOOL STREET
ROLESVILLE / NORTH CAROLINA / 27571

OPEN SPACE DETAILS (2 OF 2)

NORTH CAROLINA REGISTERED LANDSCAPE ARCHITECT No.1155 ROBERT C. ZUMWALT

NOT FOR CONSTRUCTION

FILE NUMBER: 8430-03
DATE: 11/21/2023
C9-2

811 Know what's below. Call before you dig.

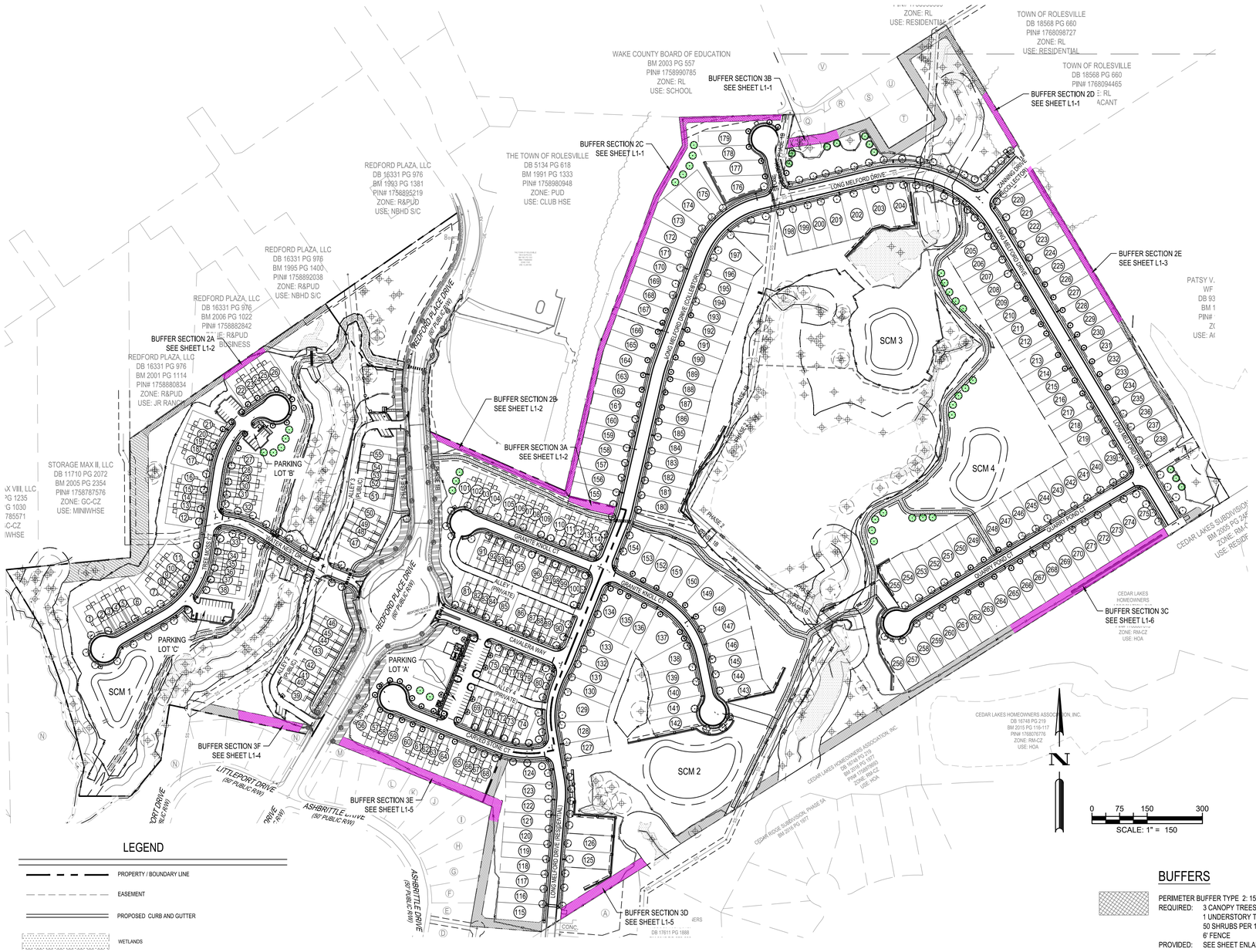

PLANT SCHEDULE: BUFFERS

CANOPY TREES	CODE	QTY	BOTANICAL NAME	COMMON NAME	CAL	HT
	AS	40	Acer saccharum	Sugar Maple	2" MIN.	8` MIN.
	QN	57	Quercus nuttallii	Nuttall Oak	2" MIN.	8` MIN.
	UP	40	Ulmus parvifolia	Lacebark Elm	2" MIN.	8` MIN.
UNDERSTORY TREES	**CODE**	**QTY**	**BOTANICAL NAME**	**COMMON NAME**	**CAL**	**HT**
	CC	17	Cercis canadensis	Eastern Redbud	1" MIN.	8` MIN.
	MS	40	Magnolia stellata	Star Magnolia	1" MIN.	8` MIN.
SHRUBS	**CODE**	**QTY**	**BOTANICAL NAME**	**COMMON NAME**	**HT**	**SPR**
	AG	572	Abelia x grandiflora	Glossy Abelia	18-24"	18-24"
	IC	408	Ilex cornuta 'Burfordii Nana'	Dwarf Burford Holly	18-24"	18-24"
	IR	266	Ilex crenata 'Rotundifolia'	Japanese Holly	18-24"	18-24"
	IG	272	Ilex glabra	Inkberry Holly	18-24"	18-24"
	IV	512	Ilex vomitoria 'Nana'	Dwarf Yaupon	18-24"	18-24"
	LC	102	Loropetalum chinense	Chinese Fringe Flower	18-24"	18-24"

PLANT SCHEDULE: STREET TREES AND PARKING

CANOPY TREES	CODE	QTY	BOTANICAL NAME	COMMON NAME	CAL.	HT.
	AS	95	Acer saccharum	Sugar Maple	2" MIN.	8` MIN.
	KP	6	Koelreuteria paniculata	Golden Rain Tree	2" MIN.	8` MIN.
	PS	92	Pistacia chinensis	Chinese Pistache	2" MIN.	8` MIN.
	QF	10	Quercus falcata	Southern Red Oak	2" MIN.	8` MIN.
	QN	91	Quercus nuttallii	Nuttall Oak	2" MIN.	8` MIN.
	UP	66	Ulmus parvifolia	Lacebark Elm	2" MIN.	8` MIN.
	ZS	66	Zelkova serrata	Sawleaf Zelkova	2" MIN.	8` MIN.
SHRUBS	**CODE**	**QTY**	**BOTANICAL NAME**	**COMMON NAME**	**HT.**	**SPR.**
	AG	42	Abelia x grandiflora	Glossy Abelia	18-24"	18-24"
	IV	46	Ilex vomitoria 'Nana'	Dwarf Yaupon	18-24"	18-24"

REPLACEMENT TREES

CANOPY TREES	CODE	QTY	BOTANICAL NAME	COMMON NAME	CAL	HT
	AS	32	Acer saccharum	Sugar Maple	2" MIN.	8' MIN.
	QF	10	Quercus falcata	Southern Red Oak	2" MIN.	8' MIN.

LEGEND

- PROPERTY / BOUNDARY LINE
- EASEMENT
- PROPOSED CURB AND GUTTER
- WETLANDS
- 50' STREAM BUFFER
- TREE PROTECTION FENCE
- LIMIT OF CONSTRUCTION
- BUFFER SECTION TO BE PLANTED*
- EXISTING STREET TREE
- PRESERVED TREE
- PRESERVED TREE CLOSE TO CONSTRUCTION LIMIT (CRITICAL ROOT ZONE SHOWN)

* BUFFER SECTION LACKING EXISTING VEGETATION OR DISTURBED BY GRADING. SEE ENLARGEMENT SHEETS FOR PLANT QUANTITIES.

TYPICAL BUFFER SECTION: TYPE 2
SCALE: 1:30

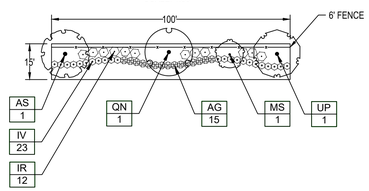

TYPICAL BUFFER SECTION: TYPE 3
SCALE:1:30

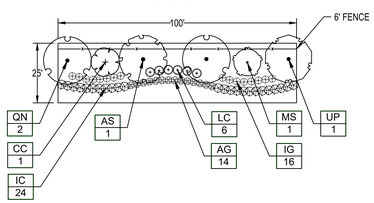

BUFFERS

PERIMETER BUFFER TYPE 2: 15' WIDTH, 3,338 TOTAL LF
REQUIRED: 3 CANOPY TREES PER 100 LF
1 UNDERSTORY TREE PER 100 LF
50 SHRUBS PER 100 LF
6' FENCE
PROVIDED: SEE SHEET ENLARGEMENTS

PERIMETER BUFFER TYPE 3: 25' WIDTH, 3,884 TOTAL LF
REQUIRED: 4 CANOPY TREES PER 100 LF
2 UNDERSTORY TREES PER 100 LF
60 SHRUBS PER 100 LF
6' WALL (6' FENCE PER ZONING)
PROVIDED: SEE SHEET ENLARGEMENTS

PERIMETER BUFFER TYPE 4: 50' WIDTH, 517 TOTAL LF
REQUIRED: 8 CANOPY TREES PER 100 LF
4 UNDERSTORY TREES PER 100 LF
CONTINUOUS HEDGE
3' WALL + 5' BERM (6' FENCE PER ZONING)
PROVIDED: EX. VEGETATION TO SATISFY REQUIREMENT

STREET BUFFER - REDFORD PLACE DRIVE (COLLECTOR):
20' WIDTH, 2,037 LF OF FRONTAGE
REQUIRED: 1 STREET TREE EVERY 50 LF OF FRONTAGE
2,037 LF OF FRONTAGE / 50' = 41 TREES
PROVIDED: 41 EXISTING CANOPY TREES TO COUNT TOWARD REQUIREMENT

STREET TREES

REQUIRED: 1 STREET TREE EVERY 40 LF OF FRONTAGE

CARVED STONE CT
REQUIRED: 918 LF OF FRONTAGE / 40' = 23 TREES
PROVIDED: 28 TREES

CALAVERA WAY
REQUIRED: 554 LF OF FRONTAGE / 40' = 14 TREES
PROVIDED: 14 TREES

GRANITE KNOLL CT
REQUIRED: 1,722 LF OF FRONTAGE / 40' = 43 TREES
PROVIDED: 46 TREES

STONE OVERLOOK
REQUIRED: 292 LF OF FRONTAGE / 40' = 7 TREES
PROVIDED: 7 TREES

WATER NEST DR
REQUIRED: 704 LF OF FRONTAGE / 40' = 18 TREES
PROVIDED: 18 TREES

TREE MOSS CT
REQUIRED: 1,660 LF OF FRONTAGE / 40' = 41 TREES
PROVIDED: 48 TREES

QUARRY POND CT
REQUIRED: 1,528 LF OF FRONTAGE / 40' = 38 TREES
PROVIDED: 39 TREES

ZANNING DRIVE
REQUIRED: 264 LF OF FRONTAGE / 40' = 7 TREES
PROVIDED: 7 TREES

LONG MELFORD DRIVE
REQUIRED: 6,800 LF OF FRONTAGE / 40' = 170 TREES
PROVIDED: 171 TREES

PARKING AREAS

PARKING LOT 'A'
REQUIRED: PERIMETER SHRUBS 3' O.C. ROADWAY SCREENING
PROVIDED: 42 SHRUBS

REQUIRED: 1 TREE / 150 SF OF PARKING ISLANDS
1,669 SF PARKING ISLANDS = 11 TREES
PROVIDED: 12 TREES

PARKING LOT 'B'
REQUIRED: PERIMETER SHRUBS 3' O.C. ROADWAY SCREENING
PROVIDED: 25 SHRUBS

PARKING LOT 'C'
REQUIRED: PERIMETER SHRUBS 3' O.C. ROADWAY SCREENING
PROVIDED: 21 SHRUBS

811 Know what's below. Call before you dig.

REV	DATE	DESCRIPTION
1	11/21/2023	PER TOWN OF ROLESVILLE COMMENT
2	10/02/2023	PER TOWN OF ROLESVILLE COMMENT
3	08/01/2023	PER TOWN OF ROLESVILLE COMMENT
0	06/01/2023	INITIAL SUBMITTAL

DESIGNED BY: MC/RZ
DRAWN BY: MC
REVIEWED BY: RZ

BGE
5440 WADE PARK BLVD, SUITE 102
RALEIGH NC 27607
WWW.BGENC.COM
NC LICENSE #C-4397

LENNAR CORPORATION
1100 PERIMETER PARK DRIVE, SUITE 112
MORRISVILLE / NORTH CAROLINA / 27560

PARKER RIDGE
82 SCHOOL STREET
ROLESVILLE / NORTH CAROLINA / 27571

OVERALL LANDSCAPE PLAN

NORTH CAROLINA REGISTERED LANDSCAPE ARCHITECT No.1155 ROBERT C. ZUMWALT

NOT FOR CONSTRUCTION

FILE NUMBER: 8430-03

DATE: 11/21/2023

L1-0

G:\INCA\Projects\Lennar\8430-03 - Lennar - School Street - Rolesville\03 - DWG\PlanSheets\On-Site\L1-0 - LS PLAN.dwg Layout: L1-0 OVERALL LANDSCAPE PLAN Plotted: 12/1/2023 2:19:38 PM

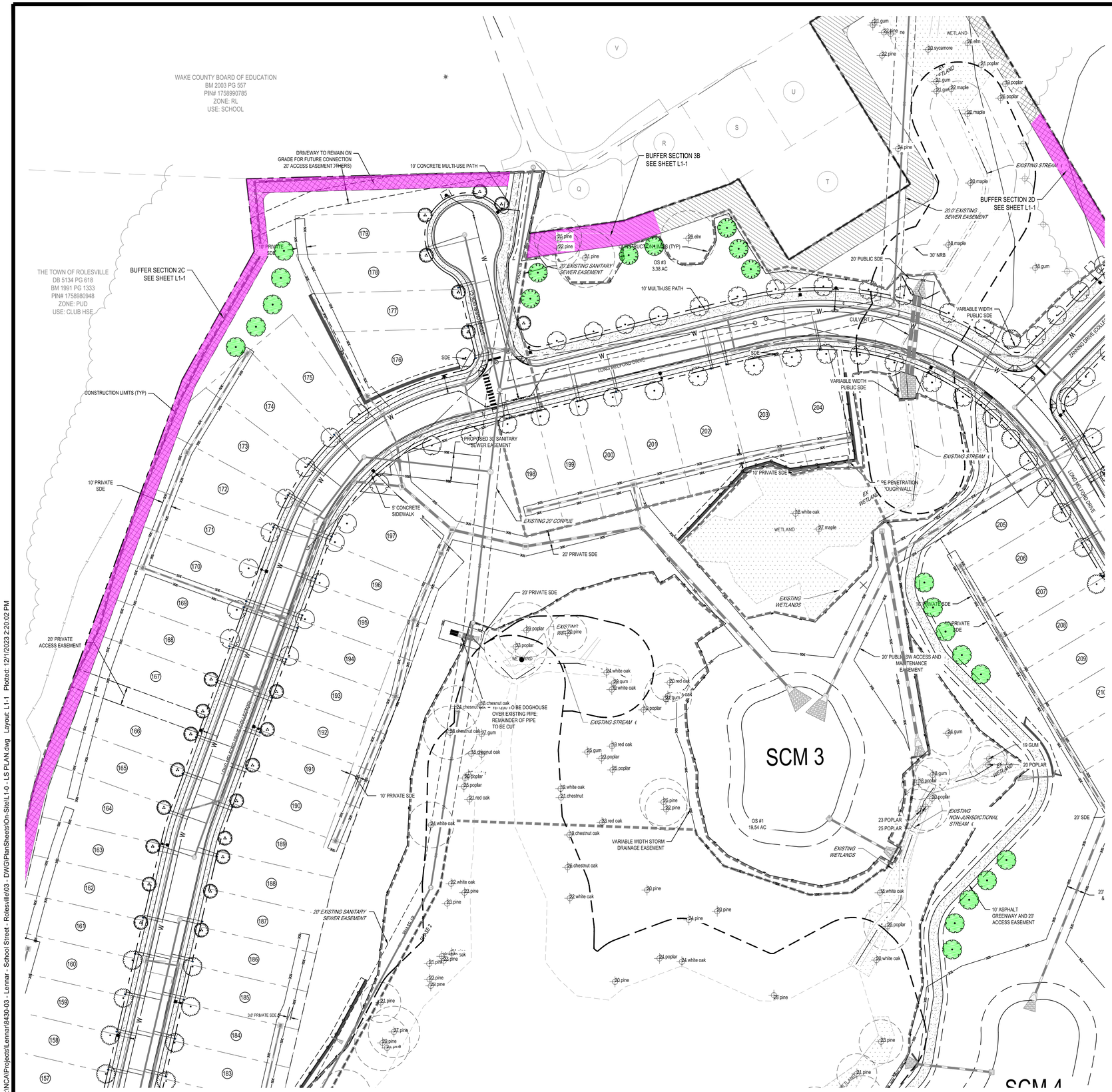

BUFFER SECTION 2C: 1,333 LF	
CANOPY TREES	COMMON NAME
13	Lacebark Elm
13	Nuttall Oak
13	Sugar Maple
UNDERSTORY TREES	COMMON NAME
13	Star Magnolia
SHRUBS	COMMON NAME
307	Dwarf Yaupon
200	Glossy Abelia
160	Japanese Holly

BUFFER SECTION 3B: 138 LF	
CANOPY TREES	COMMON NAME
1	Sugar Maple
3	Nuttall Oak
1	Lacebark Elm
UNDERSTORY TREES	COMMON NAME
1	Eastern Redbud
1	Star Magnolia
SHRUBS	COMMON NAME
19	Glossy Abelia
33	Dwarf Burford Holly
22	Inkberry Holly
8	Chinese Fringe Flower

BUFFER SECTION 2D: 167 LF	
CANOPY TREES	COMMON NAME
2	Lacebark Elm
2	Nuttall Oak
2	Sugar Maple
UNDERSTORY TREES	COMMON NAME
2	Star Magnolia
SHRUBS	COMMON NAME
38	Dwarf Yaupon
25	Glossy Abelia
20	Japanese Holly

PLANT KEY	
CANOPY TREES	COMMON NAME
	Sugar Maple
	Golden Rain Tree
	Chinese Pistache
	Nuttall Oak
	Lacebark Elm
	Sawleaf Zelkova
SHRUBS	COMMON NAME
	Glossy Abelia
	Dwarf Yaupon

LANDSCAPE BUFFERS

PERIMETER BUFFER TYPE 2 (15' WIDTH)

PERIMETER BUFFER TYPE 3 (25' WIDTH)

PERIMETER BUFFER TYPE 4 (50' WIDTH)

STREET BUFFER (20' WIDTH)

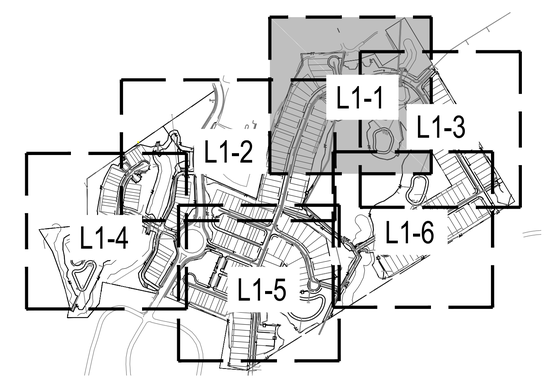

N

0 25' 50' 100'
SCALE: 1" = 50'

811
Know what's below.
Call before you dig.

REV	DATE	DESCRIPTION
1	11/21/2023	PER TOWN OF ROLESVILLE COMMENT
2	10/02/2023	PER TOWN OF ROLESVILLE COMMENT
3	08/01/2023	PER TOWN OF ROLESVILLE COMMENT
4	06/01/2023	INITIAL SUBMITTAL

DESIGNED BY: MC/RZ
DRAWN BY: MC
REVIEWED BY: RZ

BGE
5440 WADE PARK BLVD, SUITE 102
RALEIGH NC 27607
WWW.BGENC.COM
NC LICENSE #C-4397

LENNAR CORPORTAION
1100 PERIMETER PARK DRIVE, SUITE 112
MORRISVILLE / NORTH CAROLINA / 27560

PARKER RIDGE
82 SCHOOL STREET
ROLESVILLE / NORTH CAROLINA / 27571

ENLARGED LANDSCAPE PLAN (1 OF 6)

NORTH CAROLINA REGISTERED LANDSCAPE ARCHITECT No.1155 ROBERT C. ZUMWALT

NOT FOR CONSTRUCTION

FILE NUMBER: 8430-03

DATE: 11/21/2023

L1-1

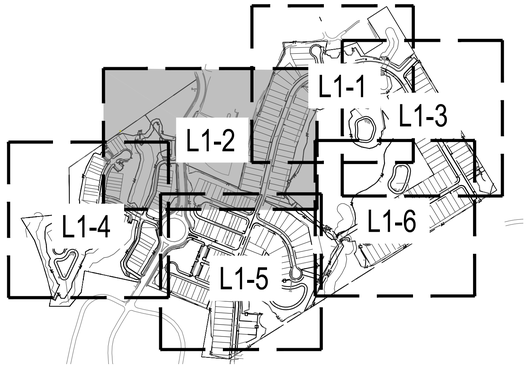

LANDSCAPE BUFFERS

- PERIMETER BUFFER TYPE 2 (15' WIDTH)
- PERIMETER BUFFER TYPE 3 (25' WIDTH)
- PERIMETER BUFFER TYPE 4 (50' WIDTH)
- STREET BUFFER (20' WIDTH)

PLANT KEY

CANOPY TREES	COMMON NAME
	Sugar Maple
	Golden Rain Tree
	Chinese Pistache
	Nuttall Oak
	Lacebark Elm
	Sawleaf Zelkova
SHRUBS	**COMMON NAME**
	Glossy Abelia
	Dwarf Yaupon

BUFFER SECTION 2A: 135 LF

CANOPY TREES	COMMON NAME
1	Lacebark Elm
1	Nuttall Oak
1	Sugar Maple
UNDERSTORY TREES	COMMON NAME
1	Star Magnolia
SHRUBS	COMMON NAME
31	Dwarf Yaupon
20	Glossy Abelia
16	Japanese Holly

BUFFER SECTION 2B: 387 LF

CANOPY TREES	COMMON NAME
4	Lacebark Elm
4	Nuttall Oak
4	Sugar Maple
UNDERSTORY TREES	COMMON NAME
4	Star Magnolia
SHRUBS	COMMON NAME
89	Dwarf Yaupon
58	Glossy Abelia
46	Japanese Holly

BUFFER SECTION 3A: 127 LF

CANOPY TREES	COMMON NAME
1	Sugar Maple
3	Nuttall Oak
1	Lacebark Elm
UNDERSTORY TREES	COMMON NAME
1	Eastern Redbud
1	Star Magnolia
SHRUBS	COMMON NAME
18	Glossy Abelia
30	Dwarf Burford Holly
20	Inkberry Holly
8	Chinese Fringe Flower

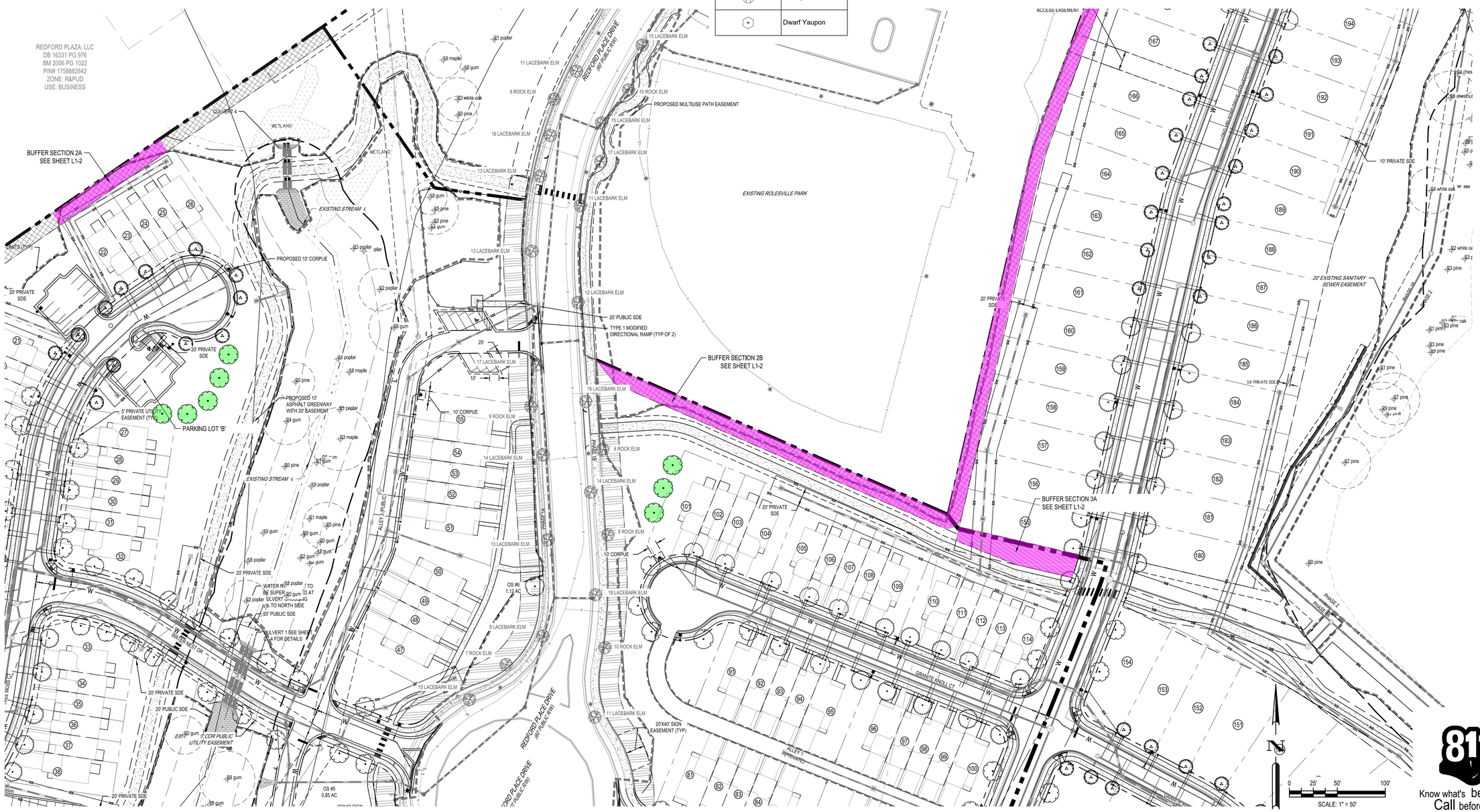

811 Know what's below. Call before you dig.

REV	DATE	DESCRIPTION
1	11/21/2023	PER TOWN OF ROLESVILLE COMMENT
2	10/02/2023	PER TOWN OF ROLESVILLE COMMENT
3	08/01/2023	PER TOWN OF ROLESVILLE COMMENT
4	06/01/2023	INITIAL SUBMITTAL

DESIGNED BY: MC/RZ
DRAWN BY: MC
REVIEWED BY: RZ

BGE
5440 WADE PARK BLVD, SUITE 102
RALEIGH NC 27607
WWW.BGEINC.COM
NC LICENSE #C-4397

LENNAR CORPORTAION
1100 PERIMETER PARK DRIVE, SUITE 112
MORRISVILLE / NORTH CAROLINA / 27560

PARKER RIDGE
82 SCHOOL STREET
ROLESVILLE / NORTH CAROLINA / 27571

ENLARGED LANDSCAPE PLAN (2 OF 6)

NORTH CAROLINA REGISTERED LANDSCAPE ARCHITECT No.1155 ROBERT C. ZUMWALT

NOT FOR CONSTRUCTION

FILE NUMBER: 8430-03

DATE: 11/21/2023

L1-2

G:\NCA\Projects\Lennar\8430-03 - Lennar - School Street - Rolesville\03 - DWG\PlanSheets\On-Site\L1-0 - LS PLAN.dwg Layout: L1-2 Plotted: 12/1/2023 2:20:25 PM

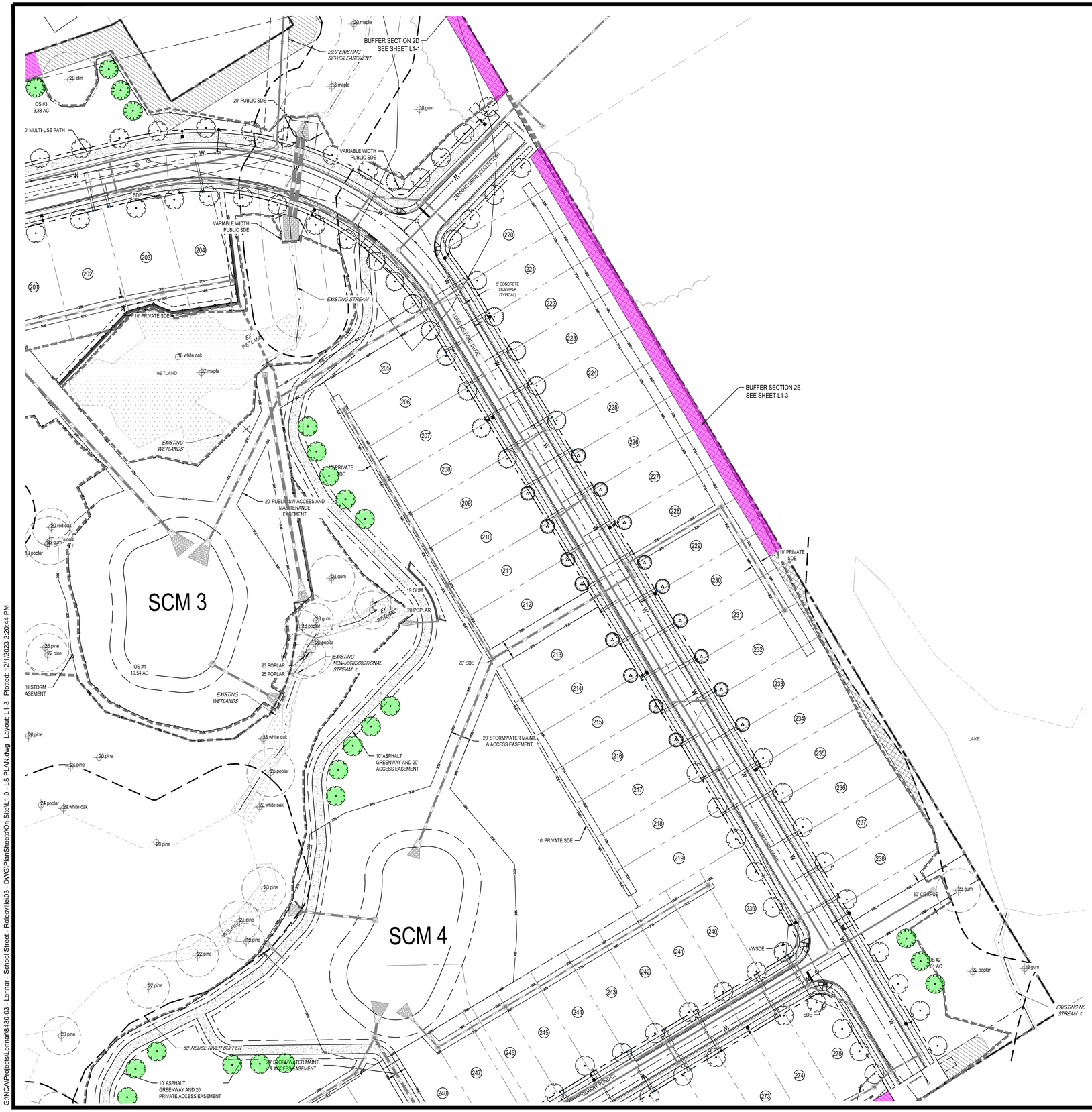

BUFFER SECTION 2E: 486 LF	
CANOPY TREES	COMMON NAME
5	Lacebark Elm
5	Nuttall Oak
5	Sugar Maple
UNDERSTORY TREES	COMMON NAME
5	Star Magnolia
SHRUBS	COMMON NAME
112	Dwarf Yaupon
73	Glossy Abelia
58	Japanese Holly

PLANT KEY	
CANOPY TREES	COMMON NAME
	Sugar Maple
	Golden Rain Tree
	Chinese Pistache
	Nuttall Oak
	Lacebark Elm
	Sawleaf Zelkova
SHRUBS	COMMON NAME
	Glossy Abelia
	Dwarf Yaupon

LANDSCAPE BUFFERS

PERIMETER BUFFER TYPE 2 (15' WIDTH)

PERIMETER BUFFER TYPE 3 (25' WIDTH)

PERIMETER BUFFER TYPE 4 (50' WIDTH)

STREET BUFFER (20' WIDTH)

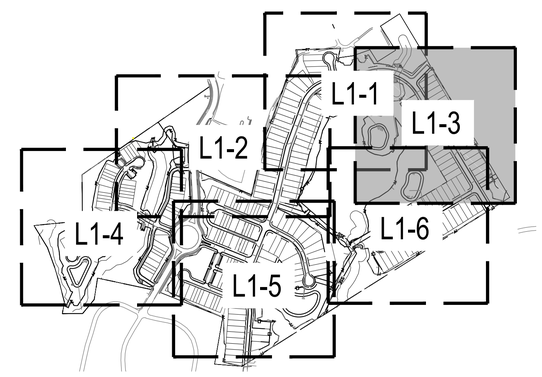

N

0 25' 50' 100'
SCALE: 1" = 50'

811
Know what's below.
Call before you dig.

REV	DATE	DESCRIPTION
1	11/21/2023	PER TOWN OF ROLESVILLE COMMENT
2	10/02/2023	PER TOWN OF ROLESVILLE COMMENT
3	08/01/2023	PER TOWN OF ROLESVILLE COMMENT
0	06/01/2023	INITIAL SUBMITTAL

DESIGNED BY: MC/RZ
DRAWN BY: MC
REVIEWED BY: RZ

BGE
5440 WADE PARK BLVD, SUITE 102
RALEIGH NC 27607
WWW.BGEINC.COM
NC LICENSE #C-4397
©2023

LENNAR CORPORTAION
1100 PERIMETER PARK DRIVE, SUITE 112
MORRISVILLE / NORTH CAROLINA / 27560

PARKER RIDGE
82 SCHOOL STREET
ROLESVILLE / NORTH CAROLINA / 27571

ENLARGED LANDSCAPE PLAN (3 OF 6)

NORTH CAROLINA REGISTERED LANDSCAPE ARCHITECT No.1155 ROBERT C. ZUMWALT

NOT FOR CONSTRUCTION

FILE NUMBER: 8430-03

DATE: 11/21/2023

L1-3

G:\NCA\Projects\Lennar\8430-03 - Lennar - School Street - Rolesville\03 - DWG\PlanSheets\On-Site\L1-0 - LS PLAN.dwg Layout: L1-3 Plotted: 12/12/2023 2:20:44 PM

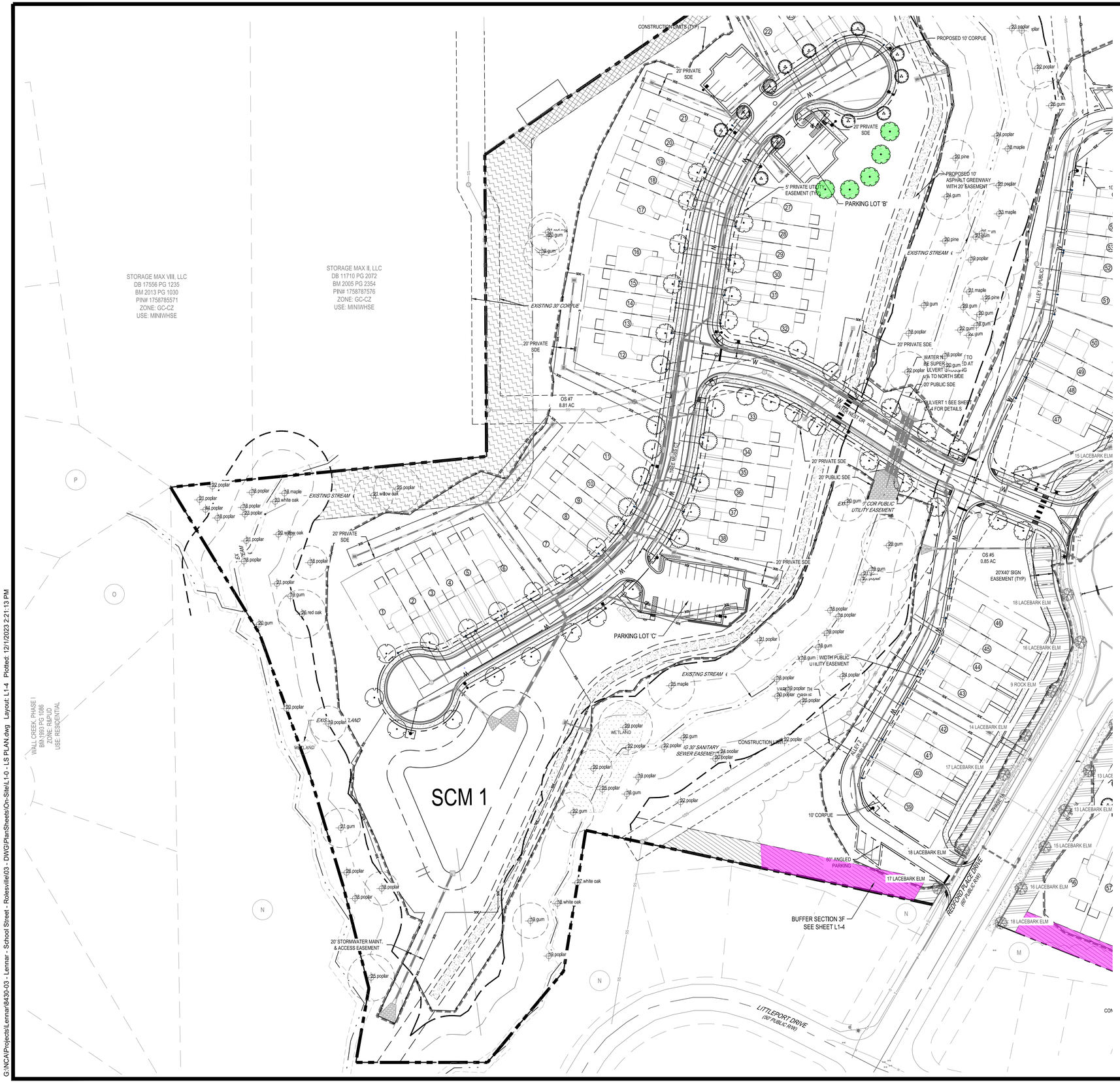

BUFFER SECTION 3F: 172 LF	
CANOPY TREES	COMMON NAME
2	Sugar Maple
3	Nuttall Oak
2	Lacebark Elm
UNDERSTORY TREES	COMMON NAME
2	Eastern Redbud
2	Star Magnolia
SHRUBS	COMMON NAME
24	Glossy Abelia
41	Dwarf Burford Holly
28	Inkberry Holly
10	Chinese Fringe Flower

LANDSCAPE BUFFERS

- PERIMETER BUFFER TYPE 2 (15' WIDTH)
- PERIMETER BUFFER TYPE 3 (25' WIDTH)
- PERIMETER BUFFER TYPE 4 (50' WIDTH)
- STREET BUFFER (20' WIDTH)

PLANT KEY	
CANOPY TREES	COMMON NAME
	Sugar Maple
	Golden Rain Tree
	Chinese Pistache
	Nuttall Oak
	Lacebark Elm
	Sawleaf Zelkova
SHRUBS	COMMON NAME
	Glossy Abelia
	Dwarf Yaupon

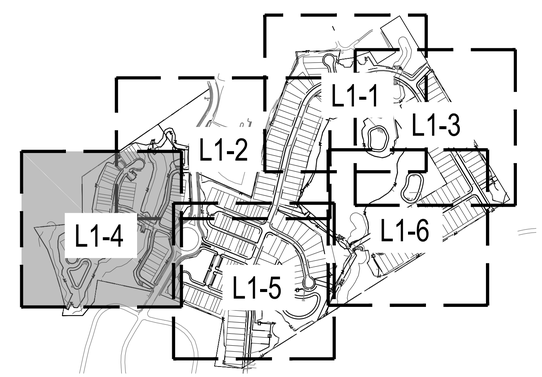

N

0 25' 50' 100'
SCALE: 1" = 50'

811
Know what's below. Call before you dig.

REV	DATE	DESCRIPTION
1	11/21/2023	PER TOWN OF ROLESVILLE COMMENT
2	10/02/2023	PER TOWN OF ROLESVILLE COMMENT
3	08/01/2023	PER TOWN OF ROLESVILLE COMMENT
4	06/01/2023	INITIAL SUBMITTAL

DESIGNED BY: MC/RZ
DRAWN BY: MC
REVIEWED BY: RZ

BGE
5440 WADE PARK BLVD, SUITE 102
RALEIGH NC 27607
WWW.BGENC.COM
NC LICENSE #C-4397

LENNAR CORPORTAION
1100 PERIMETER PARK DRIVE, SUITE 112
MORRISVILLE / NORTH CAROLINA / 27560

PARKER RIDGE
82 SCHOOL STREET
ROLESVILLE / NORTH CAROLINA / 27571

ENLARGED LANDSCAPE PLAN (4 OF 6)

NORTH CAROLINA REGISTERED LANDSCAPE ARCHITECT No.1155 ROBERT C. ZUMWALT

NOT FOR CONSTRUCTION

FILE NUMBER: 8430-03

DATE: 11/21/2023

L1-4

G:\NCA\Projects\Lennar\8430-03 - Lennar - School Street - Rolesville\03 - DWG\PlanSheets\On-Site\L1.0 - LS PLAN.dwg Layout: L1-4 Plotted: 12/12/2023 2:21:13 PM

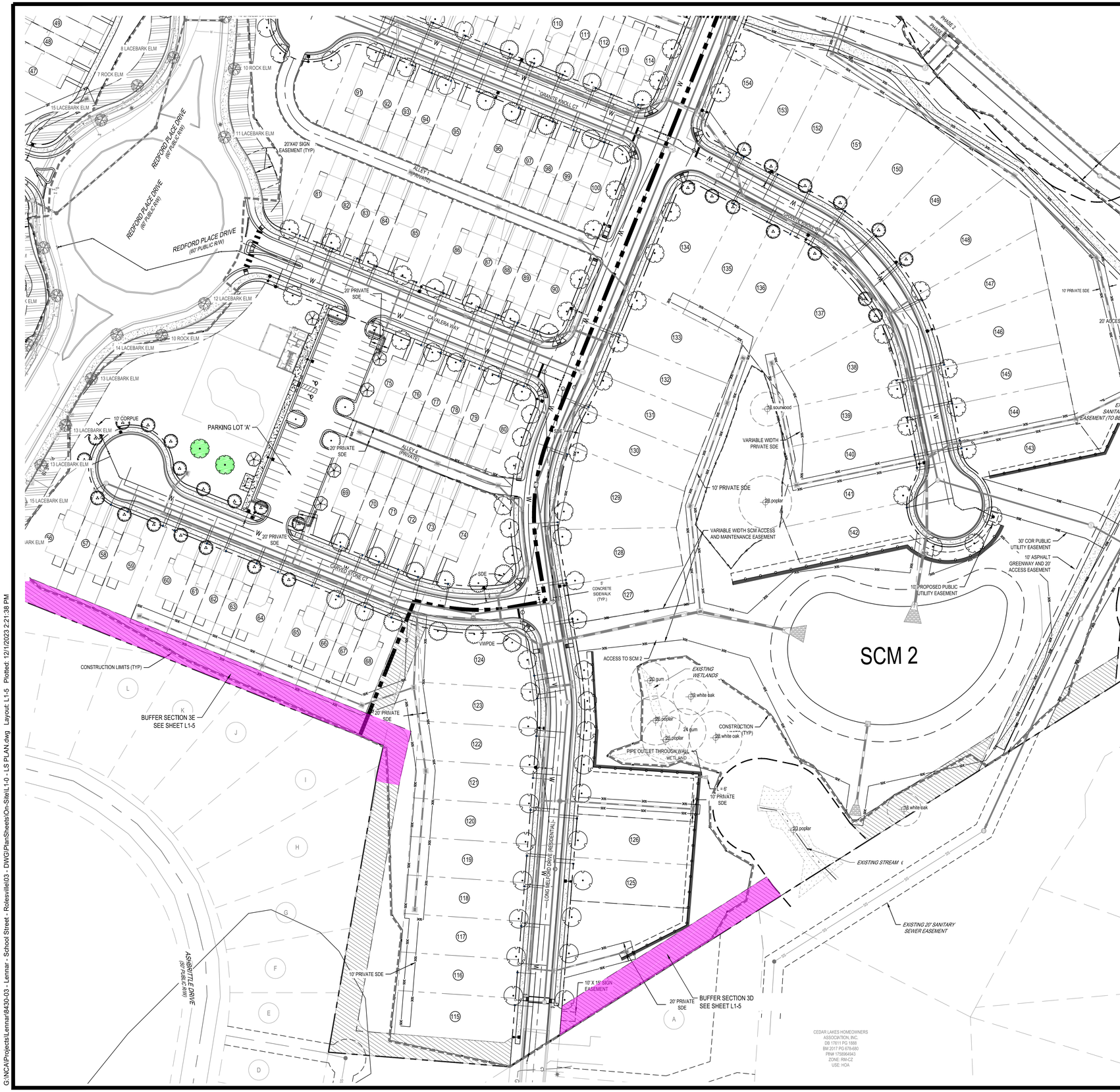

BUFFER SECTION 3D: 265 LF	
CANOPY TREES	COMMON NAME
3	Sugar Maple
5	Nuttall Oak
3	Lacebark Elm
UNDERSTORY TREES	COMMON NAME
3	Eastern Redbud
3	Star Magnolia
SHRUBS	COMMON NAME
37	Glossy Abelia
64	Dwarf Burford Holly
42	Inkberry Holly
16	Chinese Fringe Flower

BUFFER SECTION 3E: 506 LF	
CANOPY TREES	COMMON NAME
5	Sugar Maple
10	Nuttall Oak
5	Lacebark Elm
UNDERSTORY TREES	COMMON NAME
5	Eastern Redbud
5	Star Magnolia
SHRUBS	COMMON NAME
71	Glossy Abelia
121	Dwarf Burford Holly
81	Inkberry Holly
30	Chinese Fringe Flower

PLANT KEY	
CANOPY TREES	COMMON NAME
	Sugar Maple
	Golden Rain Tree
	Chinese Pistache
	Nuttall Oak
	Lacebark Elm
	Sawleaf Zelkova
SHRUBS	COMMON NAME
	Glossy Abelia
	Dwarf Yaupon

LANDSCAPE BUFFERS

- PERIMETER BUFFER TYPE 2 (15' WIDTH)
- PERIMETER BUFFER TYPE 3 (25' WIDTH)
- PERIMETER BUFFER TYPE 4 (50' WIDTH)
- STREET BUFFER (20' WIDTH)

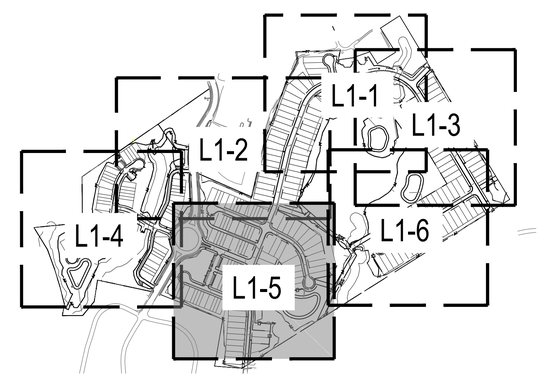

N

0 25' 50' 100'
SCALE: 1" = 50'

Know what's below. Call before you dig.

REV	DATE	DESCRIPTION
1	11/21/2023	PER TOWN OF ROLESVILLE COMMENT
2	10/02/2023	PER TOWN OF ROLESVILLE COMMENT
3	08/01/2023	PER TOWN OF ROLESVILLE COMMENT
0	06/01/2023	INITIAL SUBMITTAL

DESIGNED BY: MC/RZ
DRAWN BY: MC
REVIEWED BY: RZ

BGE
5440 WADE PARK BLVD, SUITE 102
RALEIGH NC 27607
WWW.BGEINC.COM
NC LICENSE #C-4397

LENNAR CORPORTAION
1100 PERIMETER PARK DRIVE, SUITE 112
MORRISVILLE / NORTH CAROLINA / 27560

PARKER RIDGE
82 SCHOOL STREET
ROLESVILLE / NORTH CAROLINA / 27571

ENLARGED LANDSCAPE PLAN (5 OF 6)

NORTH CAROLINA REGISTERED LANDSCAPE ARCHITECT No.1155 ROBERT C. ZUMWALT

NOT FOR CONSTRUCTION

FILE NUMBER: 8430-03

DATE: 11/21/2023

L1-5

G:\NCA\Projects\Lennar\8430-03 - Lennar - School Street - Rolesville\03 - DWG\PlanSheets\On-Site\L1-0 - LS PLAN.dwg Layout: L1-5 Plotted: 12/12/2023 2:21:38 PM

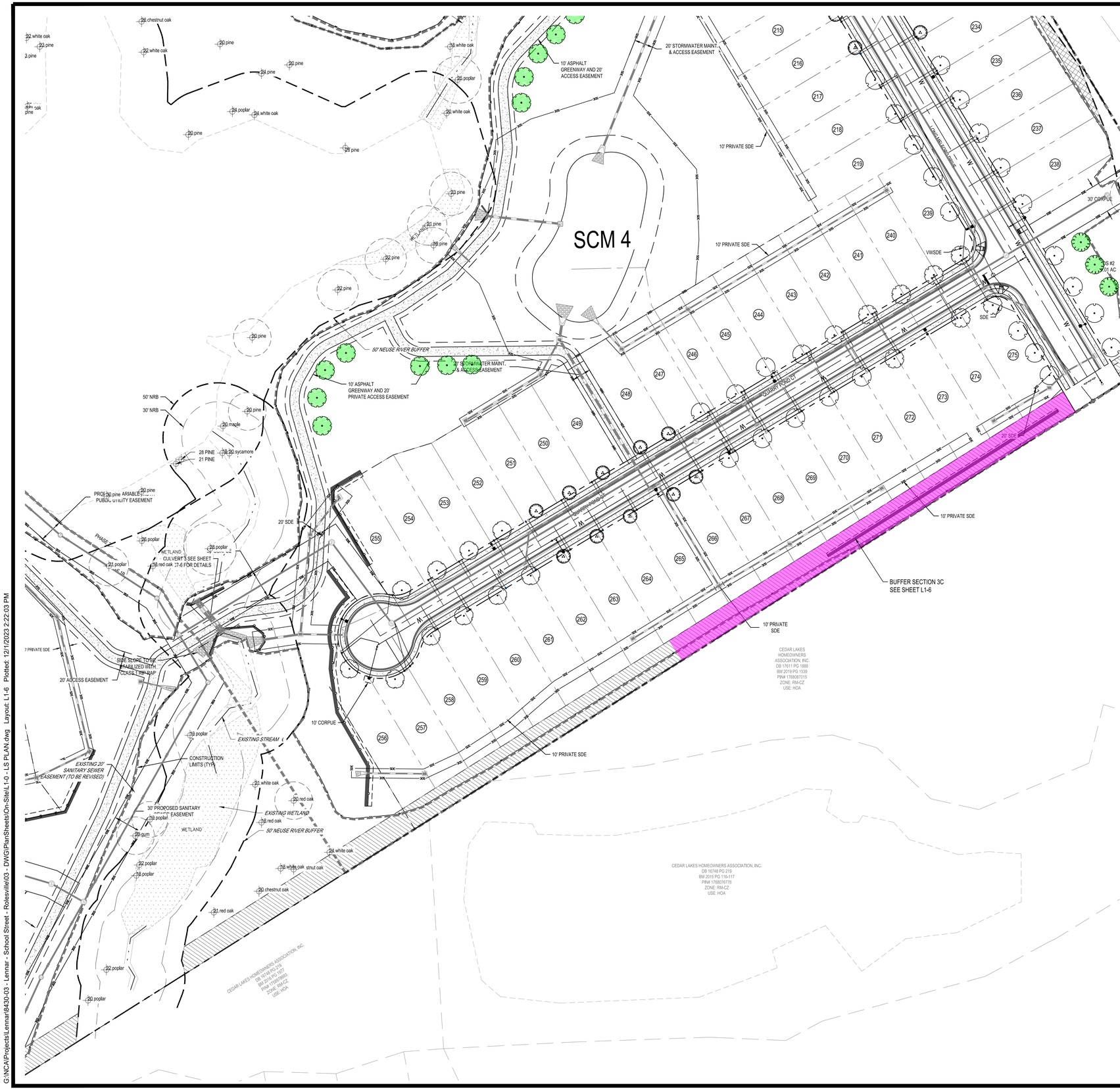

BUFFER SECTION 3C: 494 LF	
CANOPY TREES	COMMON NAME
5	Sugar Maple
10	Nuttall Oak
5	Lacebark Elm
UNDERSTORY TREES	COMMON NAME
5	Eastern Redbud
5	Star Magnolia
SHRUBS	COMMON NAME
69	Glossy Abelia
119	Dwarf Burford Holly
79	Inkberry Holly
30	Chinese Fringe Flower

LANDSCAPE BUFFERS

PERIMETER BUFFER TYPE 2 (15' WIDTH)

PERIMETER BUFFER TYPE 3 (25' WIDTH)

PERIMETER BUFFER TYPE 4 (50' WIDTH)

STREET BUFFER (20' WIDTH)

PLANT KEY	
CANOPY TREES	COMMON NAME
	Sugar Maple
	Golden Rain Tree
	Chinese Pistache
	Nuttall Oak
	Lacebark Elm
	Sawleaf Zelkova
SHRUBS	COMMON NAME
	Glossy Abelia
	Dwarf Yaupon

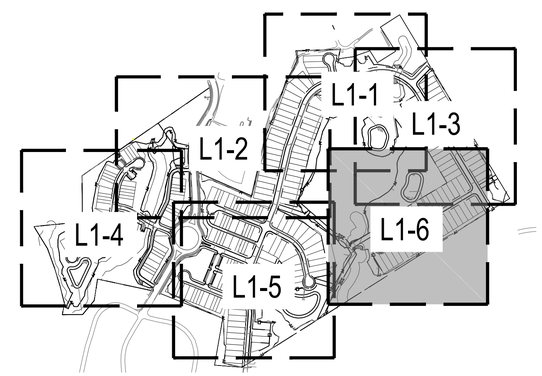

N

0 25' 50' 100'
SCALE: 1" = 50'

811
Know what's below.
Call before you dig.

REV		
06/01/2023	INITIAL SUBMITTAL	
08/01/2023	PER TOWN OF ROLESVILLE COMMENT	
10/02/2023	PER TOWN OF ROLESVILLE COMMENT	
11/21/2023	PER TOWN OF ROLESVILLE COMMENT	

DESIGNED BY: MC/RZ
DRAWN BY: MC
REVIEWED BY: RZ

BGE
5440 WADE PARK BLVD, SUITE 102
RALEIGH NC 27607
WWW.BGEINC.COM
NC LICENSE #C-4397

LENNAR CORPORTAION
1100 PERIMETER PARK DRIVE, SUITE 112
MORRISVILLE / NORTH CAROLINA / 27560

PARKER RIDGE
82 SCHOOL STREET
ROLESVILLE / NORTH CAROLINA / 27571

ENLARGED LANDSCAPE PLAN (6 OF 6)

NORTH CAROLINA REGISTERED LANDSCAPE ARCHITECT No.1155 ROBERT C. ZUMWALT

NOT FOR CONSTRUCTION

FILE NUMBER: 8430-03

DATE: 11/21/2023

L1-6

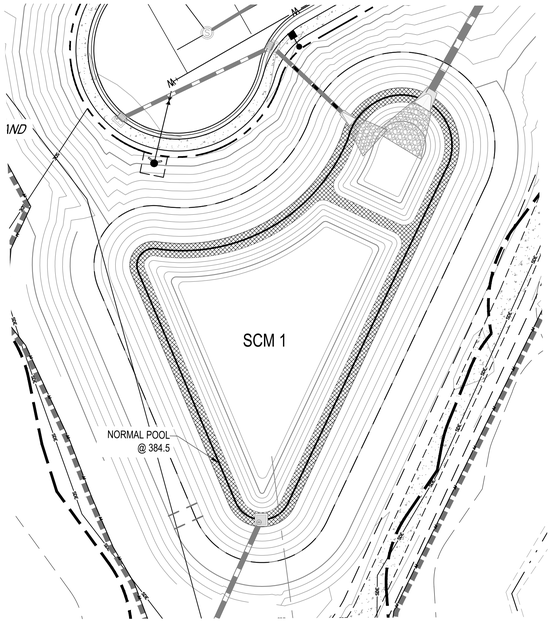

SCM 1 PLANTING CALCULATIONS

NORMAL POOL ELEVATION: 384.5'

VEGETATED SHELF: 3,065 S.F. (0.5' BELOW TO 0.5' ABOVE PERMANENT POND ELEV.)

REQUIRED: .25 PLANTS PER SQUARE FOOT
(3 MINIMUM HERBACEOUS SPECIES)
0.25 PLANTS x 3,065 SF = 766 PLANTS
PROVIDED: (255) HC, (255) LC, (255) CT

SCM 1 PLANTING SCHEDULE

KEY	QTY.	SCIENTIFIC NAME	COMMON NAME	CONT.
HC	255	HIBISCUS COCCINEUS	SCARLET ROSE MALLOW	24"Ø x 5" PLUG
LC	255	LOBELIA CARDINALIS	CARDINAL FLOWER	24"Ø x 5" PLUG
CT	255	CAREX TENERA	QUILL SEDGE	24"Ø x 5" PLUG

VEGETATED SHELF MIX

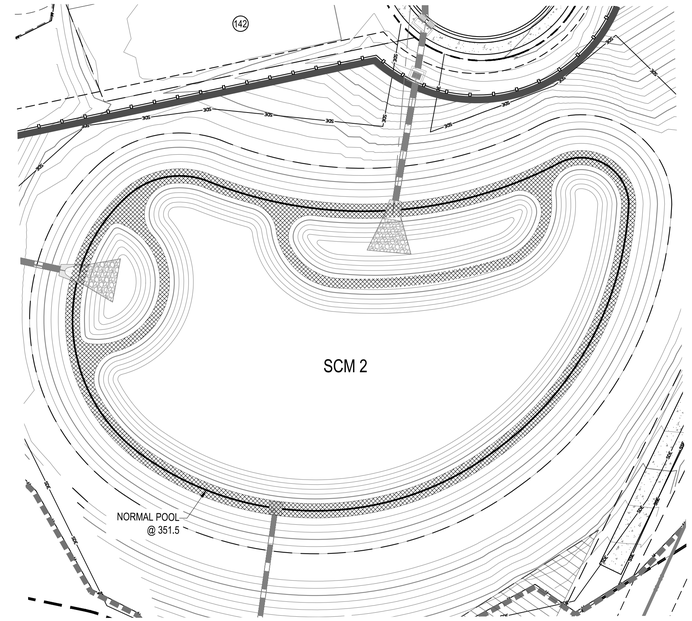

SCM 2 PLANTING CALCULATIONS

NORMAL POOL ELEVATION: 351.5'

VEGETATED SHELF: 5,108 S.F. (0.5' BELOW TO 0.5' ABOVE PERMANENT POND ELEV.)

REQUIRED: .25 PLANTS PER SQUARE FOOT
(3 MINIMUM HERBACEOUS SPECIES)
0.25 PLANTS x 5,108 SF = 1,277 PLANTS
PROVIDED: (426) HC, (426) LC, (426) CT

SCM 2 PLANTING SCHEDULE

KEY	QTY.	SCIENTIFIC NAME	COMMON NAME	CON.
HC	426	HIBISCUS COCCINEUS	SCARLET ROSE MALLOW	24"Ø x 5" PLUG
LC	426	LOBELIA CARDINALIS	CARDINAL FLOWER	24"Ø x 5" PLUG
CT	426	CAREX TENERA	QUILL SEDGE	24"Ø x 5" PLUG

VEGETATED SHELF MIX

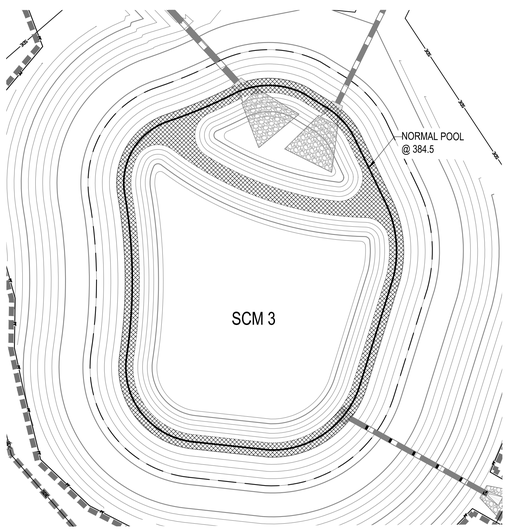

SCM 3 PLANTING CALCULATIONS

NORMAL POOL ELEVATION: 384.5'

VEGETATED SHELF: 3,413 S.F. (0.5' BELOW TO 0.5' ABOVE PERMANENT POND ELEV.)

REQUIRED: .25 PLANTS PER SQUARE FOOT
(3 MINIMUM HERBACEOUS SPECIES)
0.25 PLANTS x 3,413 SF = 853 PLANTS
PROVIDED: (285) HC, (285) LC, (285) CT

SCM 3 PLANTING SCHEDULE

KEY	QTY.	SCIENTIFIC NAME	COMMON NAME	CON.
HC	285	HIBISCUS COCCINEUS	SCARLET ROSE MALLOW	24"Ø x 5" PLUG
LC	285	LOBELIA CARDINALIS	CARDINAL FLOWER	24"Ø x 5" PLUG
CT	285	CAREX TENERA	QUILL SEDGE	24"Ø x 5" PLUG

VEGETATED SHELF MIX

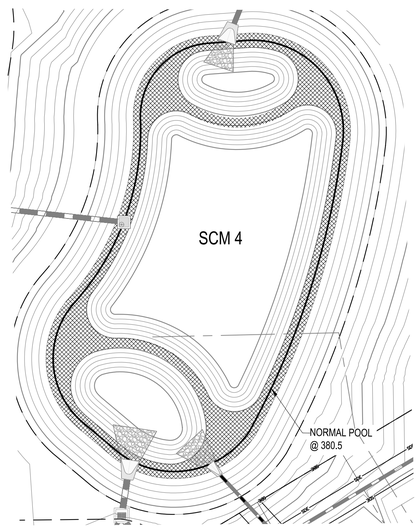

SCM 4 PLANTING CALCULATIONS

NORMAL POOL ELEVATION: 380.5'

VEGETATED SHELF: 4,398 S.F. (0.5' BELOW TO 0.5' ABOVE PERMANENT POND ELEV.)

REQUIRED: .25 PLANTS PER SQUARE FOOT
(3 MINIMUM HERBACEOUS SPECIES)
0.25 PLANTS x 4,398 SF = 1,100 PLANTS
PROVIDED: (367) HC, (367) LC, (367) CT

SCM 4 PLANTING SCHEDULE

KEY	QTY.	SCIENTIFIC NAME	COMMON NAME	CON.
HC	367	HIBISCUS COCCINEUS	SCARLET ROSE MALLOW	24"Ø x 5" PLUG
LC	367	LOBELIA CARDINALIS	CARDINAL FLOWER	24"Ø x 5" PLUG
CT	367	CAREX TENERA	QUILL SEDGE	24"Ø x 5" PLUG

VEGETATED SHELF MIX

N

0 15' 30' 60'
SCALE: 1" = 30'

NOTES:
TREES AND WOODY SHRUBS ARE NOT PERMITTED ON THE DAM OR EMBANKMENT SLOPES AND ANY VOLUNTEERS SHOULD BE REMOVED AS PART OF REGULAR MAINTENANCE ACTIVITIES.
TREES AND SHRUBS MAY BE PLANTED OUTSIDE OF EMBANKMENT SLOPES AND CLEAR FROM MAINTENANCE EASEMENT.

811
Know what's below.
Call before you dig.

REV	DATE	DESCRIPTION
1	11/21/2023	PER TOWN OF ROLESVILLE COMMENT
2	10/02/2023	PER TOWN OF ROLESVILLE COMMENT
3	08/01/2023	PER TOWN OF ROLESVILLE COMMENT
4	06/01/2023	INITIAL SUBMITTAL

DESIGNED BY: MC/RZ
DRAWN BY: MC
REVIEWED BY: RZ

BGE
5440 WADE PARK BLVD, SUITE 102
RALEIGH NC 27607
WWW.BGEINC.COM
NC LICENSE #C-4397

LENNAR CORPORTAION
1100 PERIMETER PARK DRIVE, SUITE 112
MORRISVILLE / NORTH CAROLINA / 27560

PARKER RIDGE
82 SCHOOL STREET
ROLESVILLE / NORTH CAROLINA / 27571

SCM PLANTINGS

NORTH CAROLINA PROFESSIONAL SEAL 022882 ENGINEER DEBRA M. FERRELL 12-01-23

NOT FOR CONSTRUCTION

FILE NUMBER: 8430-03

DATE: 11/21/2023

L1-7

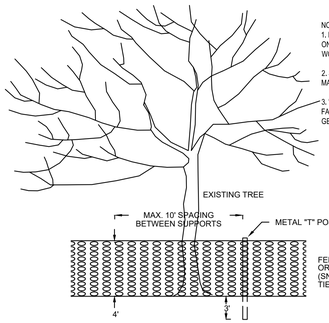

NOTES:
1. PLACE CONTINUOUS RUN OF FENCE MATERIAL ON BOTH SIDES OF IMMEDIATE WORK ZONE IN WOODED AREAS.
2. SET "T" POSTS 3' DEEP WHERE NEEDED TO MAINTAIN MAXIMUM INTERVAL.
3. 'TENSAR' HIGH STRENGTH POLYMER GEOGRID FABRIC BY TENSAR CORPORATION, MORROW, GEORGIA.

* TREE PROTECTION FENCING MUST BE IN PLACE PRIOR TO ANY DEMOLITION, LAND DISTURBANCE OR ISSUANCE OF A GRADING PERMIT AND SHALL INCLUDE WARNING SIGNS POSTED IN BOTH ENGLISH AND SPANISH, AS FOLLOWS: "NO TRESPASSING/TREE PROTECTION AREA/PROHIBIDO ENTRAR/ZONA PROTECTORA PARA LOS ÁRBOLES."

* ROOT PROTECTION ZONE: EQUALS ONE FOOT OF RADIUS FOR EVERY INCH OF DIAMETER OF EXISTING TREES, OR SIX FOOT RADIUS, WHICHEVER IS GREATER. NO DISTURBANCE ALLOWED WITHIN THIS AREA. AREA MUST BE PROTECTED WITH BOTH TREE PROTECTION FENCING AND WARNING SIGNS.

NOTES:
1. WARNING SIGNS SHALL BE MADE OF DURABLE WEATHERPROOF MATERIAL.
2. LETTERS SHALL BE 3" HIGH MINIMUM, CLEARLY LEGIBLE, AND SPACED AS SHOWN.
3. SIGNS ARE TO BE PLACED NO GREATER THAN 75 FT. ON CENTER.
4. PLACE SIGN AT EACH END OF LINEAR TREE PROTECTION AREAS AND 75 FT. ON-CENTER THEREAFTER.
5. FOR TREE PROTECTION AREAS LESS THAN 75 FT. IN PERIMETER, PROVIDE NO LESS THAN ONE SIGN PER AREA.
6. ATTACH SIGNS SECURELY TO FENCE POSTS AND FABRIC.
7. MAINTAIN TREE PROTECTION FENCE THROUGHOUT DURATION OF PROJECT.
8. ADDITIONAL SIGNS MAY BE REQUIRED BASED ON ACTUAL FIELD CONDITIONS.

TREE PROTECTION FENCE DETAIL

NOTES:
1. REMOVE WIRE AND NYLON TWINE FROM BALL AND CANOPY.
2. SOAK ROOT BALL AND PLANT PIT IMMEDIATELY AFTER INSTALLATION.
3. STAKING IS REQUIRED FOR ALL TREES IN R.O.W. OR UPON REQUEST OF ARBORIST.
4. REMOVE EXCESS SOIL FROM SITE AND DISPOSE OF IN A LEGAL MANNER.
5. RESEED UNMULCHED, DISTURBED AREAS.

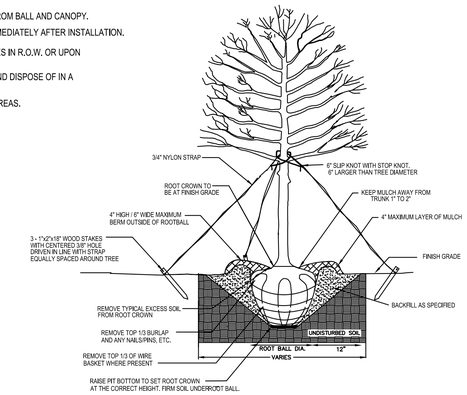

NOT TO SCALE

TREE PLANTING
(FOR SINGLE AND MULTI - STEM TREES)

NOTES:
1. SCARIFY ROOT MASS OF CONTAINERIZED PLANT MATERIAL.
2. INSTALL CONTAINERIZED PLANTS AT FINSHED GRADE.
3. TAMP PLANTING MIX FIRMLY AS PIT IS FILLED AROUND EACH PLANT BALL.
4. OMIT COLLAR AROUND EACH SHRUB WHEN IRRIGATION SYSTEM IS PRESENT.
5. SOAK EACH PLANT BALL AND PIT IMMEDIATELY AFTER INSTALLATION.

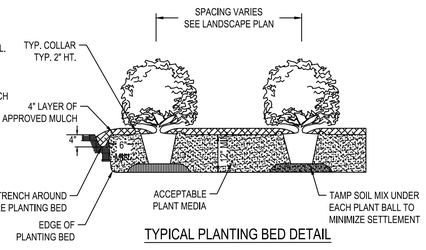

TYPICAL PLANTING BED DETAIL

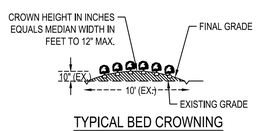

TYPICAL BED CROWNING

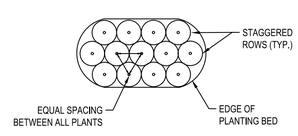

TYPICAL PLANTING BED PLAN

NOT TO SCALE

SHRUB PLANTING BED DETAIL

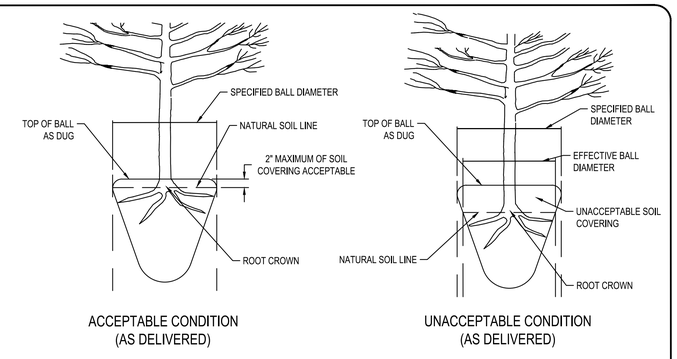

ACCEPTABLE CONDITION
(AS DELIVERED)

UNACCEPTABLE CONDITION
(AS DELIVERED)

NOTE:
A ROOT FLARE EXCAVATION FOR ALL TREES SPECIFIED WILL BE DONE BY THE CITY ARBORIST TO ENSURE THAT TREES WERE NOT PLANTED/GROWN TOO DEEPLY AT SOURCE (NURSERY). LANDSCAPE CONTRACTOR SHALL HAVE SUPPLIER MARK GROUND LEVEL LINE ABOVE ROOT BALL. IF CITY ARBORIST DETERMINES THAT THERE IS EXCESSIVE SOIL OVER THE ROOT CROWN, THESE TREES WILL BE REJECTED.

NOT TO SCALE

ROOT FLARE DEPTHS DETAIL
(TREE ROOT BALL CONDITION ON TREES FROM SUPPLIERS)

811
Know what's below.
Call before you dig.

REV	DATE	
1	11/21/2023	PER TOWN OF ROLESVILLE COMMENT
2	10/02/2023	PER TOWN OF ROLESVILLE COMMENT
3	08/01/2023	PER TOWN OF ROLESVILLE COMMENT
4	06/01/2023	INITIAL SUBMITTAL

DESIGNED BY: DF/CD
DRAWN BY: DF/JWM
REVIEWED BY: DF

BCE
5440 WADE PARK BLVD, SUITE 102
RALEIGH NC 27607
WWW.BGENC.COM
NC LICENSE #C-4397

LENNAR CORPORTAION
1100 PERIMETER PARK DRIVE, SUITE 112
MORRISVILLE / NORTH CAROLINA / 27560

PARKER RIDGE
82 SCHOOL STREET
ROLESVILLE / NORTH CAROLINA / 27571

LANDSCAPE DETAILS

NORTH CAROLINA REGISTERED LANDSCAPE ARCHITECT No.1155 ROBERT C. ZUMWALT

NOT FOR CONSTRUCTION

FILE NUMBER: 8430-03
DATE: 11/21/2023
L2-0

LEGEND

- PROPERTY / BOUNDARY LINE
- EASEMENT
- PROPOSED CURB AND GUTTER
- WETLANDS
- 50' STREAM BUFFER
- TREE PROTECTION FENCE
- LIMIT OF CONSTRUCTION
- EXISTING TREE CANOPY
- PROPOSED TREE CONSERVATION AREA
- EXISTING STREET TREE
- PRESERVED TREE
- PRESERVED TREE CLOSE TO CONSTRUCTION LIMIT (CRITICAL ROOT ZONE SHOWN)
- TREE REMOVED FROM PERIMETER BUFFER

TREE CONSERVATION DATA

EXISTING TREE CANOPY AREA	71.57 AC
TREE CONSERVATION AREA REQUIRED (10% OF EXISTING TREE CANOPY AREA)	7.16 AC
TREE CONSERVATION AREA PROVIDED	17.92 AC (25.04%)

TREE REPLACEMENT

QUALIFYING TREE REMOVED	DBH	REPLACEMENT
SWEET GUM	20 IN.	10 TREES X 2" CAL. = 20 IN.
SWEET GUM	20 IN.	10 TREES X 2" CAL. = 20 IN.
SWEET GUM	21 IN.	11 TREES X 2" CAL. = 22 IN.
RED OAK	19 IN.	10 TREES X 2" CAL. = 20 IN.

N

0 75 150 300
SCALE: 1" = 150

811 Know what's below. Call before you dig.

REV	DATE	DESCRIPTION
1	11/21/2023	PER TOWN OF ROLESVILLE COMMENT
2	10/02/2023	PER TOWN OF ROLESVILLE COMMENT
3	08/01/2023	PER TOWN OF ROLESVILLE COMMENT
0	06/01/2023	INITIAL SUBMITTAL

DESIGNED BY: MC/RZ
DRAWN BY: MC
REVIEWED BY: RZ

BGE
5440 WADE PARK BLVD, SUITE 102
RALEIGH NC 27607
WWW.BGEINC.COM
NC LICENSE #C-4397

LENNAR CORPORTAION
1100 PERIMETER PARK DRIVE, SUITE 112
MORRISVILLE / NORTH CAROLINA / 27560

PARKER RIDGE
82 SCHOOL STREET
ROLESVILLE / NORTH CAROLINA / 27571

OVERALL TREE CONSERVATION PLAN

NORTH CAROLINA REGISTERED LANDSCAPE ARCHITECT No.1155 ROBERT C. ZUMWALT

NOT FOR CONSTRUCTION

FILE NUMBER: 8430-03

DATE: 11/21/2023

L3-0

LEGEND

- PROPERTY / BOUNDARY LINE
- EASEMENT
- PROPOSED CURB AND GUTTER
- WETLANDS
- 50' STREAM BUFFER
- TREE PROTECTION FENCE
- LIMIT OF CONSTRUCTION
- EXISTING TREE CANOPY
- PROPOSED TREE CONSERVATION AREA
- EXISTING STREET TREE
- PRESERVED TREE
- PRESERVED TREE CLOSE TO CONSTRUCTION LIMIT (CRITICAL ROOT ZONE SHOWN)
- TREE REMOVED FROM PERIMETER BUFFER

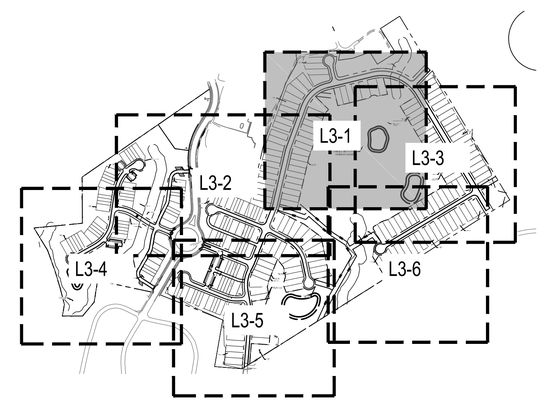

N

0 75 150 300
SCALE: 1" = 150

811
Know what's below.
Call before you dig.

REV	DATE	DESCRIPTION
1	11/21/2023	PER TOWN OF ROLESVILLE COMMENT
2	10/02/2023	PER TOWN OF ROLESVILLE COMMENT
3	08/01/2023	PER TOWN OF ROLESVILLE COMMENT
4	06/01/2023	INITIAL SUBMITTAL

DESIGNED BY: MC/RZ
DRAWN BY: MC
REVIEWED BY: RZ

BGE
5440 WADE PARK BLVD, SUITE 102
RALEIGH NC 27607
WWW.BGEINC.COM
NC LICENSE #C-4397

LENNAR CORPORTAION
1100 PERIMETER PARK DRIVE, SUITE 112
MORRISVILLE / NORTH CAROLINA / 27560

PARKER RIDGE
82 SCHOOL STREET
ROLESVILLE / NORTH CAROLINA / 27571

ENLARGED TCA PLAN (1 OF 6)

NORTH CAROLINA REGISTERED LANDSCAPE ARCHITECT No.1155 ROBERT C. ZUMWALT

NOT FOR CONSTRUCTION

FILE NUMBER: 8430-03

DATE: 11/21/2023

L3-1

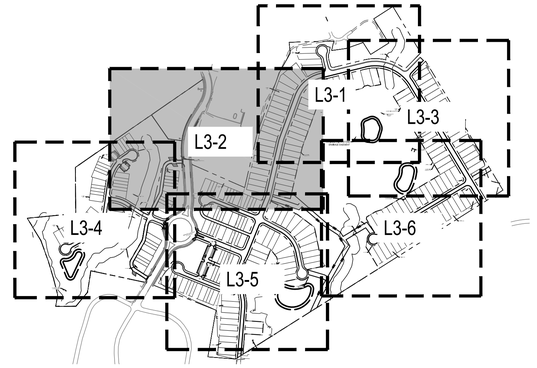

LEGEND

- PROPERTY / BOUNDARY LINE
- EASEMENT
- PROPOSED CURB AND GUTTER
- WETLANDS
- 50' STREAM BUFFER
- TREE PROTECTION FENCE
- LIMIT OF CONSTRUCTION
- EXISTING TREE CANOPY
- PROPOSED TREE CONSERVATION AREA
- EXISTING STREET TREE
- PRESERVED TREE
- PRESERVED TREE CLOSE TO CONSTRUCTION LIMIT (CRITICAL ROOT ZONE SHOWN)
- TREE REMOVED FROM PERIMETER BUFFER

Know what's below. Call before you dig.

REV	DATE	
1	11/21/2023	PER TOWN OF ROLESVILLE COMMENT
2	10/02/2023	PER TOWN OF ROLESVILLE COMMENT
3	08/01/2023	PER TOWN OF ROLESVILLE COMMENT
4	06/01/2023	INITIAL SUBMITTAL

DESIGNED BY: MC/RZ
DRAWN BY: MC
REVIEWED BY: RZ

BGE
5440 WADE PARK BLVD, SUITE 102
RALEIGH NC 27607
WWW.BGEINC.COM
NC LICENSE #C-4397

LENNAR CORPORTAION
1100 PERIMETER PARK DRIVE, SUITE 112
MORRISVILLE / NORTH CAROLINA / 27560

PARKER RIDGE
82 SCHOOL STREET
ROLESVILLE / NORTH CAROLINA / 27571

ENLARGED TCA PLAN (2 OF 6)

NORTH CAROLINA REGISTERED LANDSCAPE ARCHITECT No.1155 ROBERT C. ZUMWALT

NOT FOR CONSTRUCTION

FILE NUMBER: 8430-03

DATE: 11/21/2023

L3-2

G:\NCA\Projects\Lennar\8430-03 - Lennar - School Street - Rolesville\03 - DWG\PlanSheets\On-Site\L3-0 - TCA PLAN.dwg Layout: L3-2 Plotted: 12/1/2023 2:06:06 PM

(3) SWEET GUMS TO BE REMOVED FROM PERIMETER BUFFER. SEE LANDSCAPE PLAN FOR REPLACEMENT TREES.

PROPERTY BOUNDARY

ZANANG DRIVE (COLLECTOR)

LONG BELLEFORD DRIVE

QUARRY POND CT

SCM 3

SCM 4

WETLAND

50' NRB

20' PUBLIC SDE

10' PRIVATE SDE

CONSERVATION EASEMENT (TYP)

20' PUBLIC SW ACCESS AND MAINTENANCE EASEMENT

20' SDE

20' STORMWATER MAINT. & ACCESS EASEMENT

30' CORPUE

VWSDE

SDE

NOTE: DASHED POND EXTENTS PER GIS

LAKE

EXISTING POND

LEGEND

- PROPERTY / BOUNDARY LINE
- EASEMENT
- PROPOSED CURB AND GUTTER
- WETLANDS
- 50' STREAM BUFFER
- TREE PROTECTION FENCE
- LIMIT OF CONSTRUCTION
- EXISTING TREE CANOPY
- PROPOSED TREE CONSERVATION AREA
- EXISTING STREET TREE
- PRESERVED TREE
- PRESERVED TREE CLOSE TO CONSTRUCTION LIMIT (CRITICAL ROOT ZONE SHOWN)
- TREE REMOVED FROM PERIMETER BUFFER

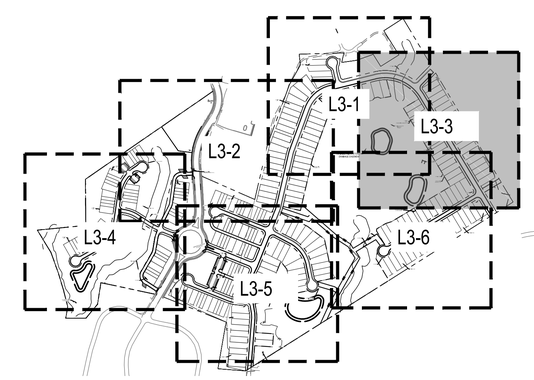

N

SCALE: 1" = 150

Know what's below. Call before you dig.

REV	DATE	DESCRIPTION
1	11/21/2023	PER TOWN OF ROLESVILLE COMMENT
2	10/02/2023	PER TOWN OF ROLESVILLE COMMENT
3	08/01/2023	PER TOWN OF ROLESVILLE COMMENT
4	06/01/2023	INITIAL SUBMITTAL

DESIGNED BY: MC/RZ

DRAWN BY: MC

REVIEWED BY: RZ

BGE
5440 WADE PARK BLVD, SUITE 102
RALEIGH NC 27607
WWW.BGEINC.COM
NC LICENSE #C-4397

LENNAR CORPORTAION
1100 PERIMETER PARK DRIVE, SUITE 112
MORRISVILLE / NORTH CAROLINA / 27560

PARKER RIDGE
82 SCHOOL STREET
ROLESVILLE / NORTH CAROLINA / 27571

ENLARGED TCA PLAN (3 OF 6)

NORTH CAROLINA REGISTERED LANDSCAPE ARCHITECT No.1155 ROBERT C. ZUMWALT

NOT FOR CONSTRUCTION

FILE NUMBER: 8430-03

DATE: 11/21/2023

L3-3

LEGEND

- PROPERTY / BOUNDARY LINE
- EASEMENT
- PROPOSED CURB AND GUTTER
- WETLANDS
- 50' STREAM BUFFER
- TREE PROTECTION FENCE
- LIMIT OF CONSTRUCTION
- EXISTING TREE CANOPY
- PROPOSED TREE CONSERVATION AREA
- EXISTING STREET TREE
- PRESERVED TREE
- PRESERVED TREE CLOSE TO CONSTRUCTION LIMIT (CRITICAL ROOT ZONE SHOWN)
- TREE REMOVED FROM PERIMETER BUFFER

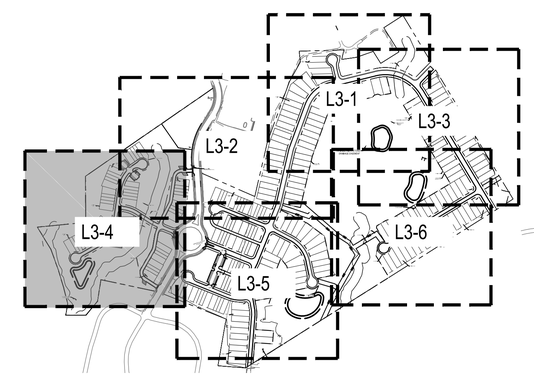

N

0 75 150 300

SCALE: 1" = 150

811 Know what's below. Call before you dig.

REV	DATE	DESCRIPTION
1	11/21/2023	PER TOWN OF ROLESVILLE COMMENT
2	10/02/2023	PER TOWN OF ROLESVILLE COMMENT
3	08/01/2023	PER TOWN OF ROLESVILLE COMMENT
4	06/01/2023	INITIAL SUBMITTAL

DESIGNED BY: MC/RZ

DRAWN BY: MC

REVIEWED BY: RZ

BGE
5440 WADE PARK BLVD, SUITE 102
RALEIGH NC 27607
WWW.BGEINC.COM
NC LICENSE #C-4397

LENNAR CORPORTAION
1100 PERIMETER PARK DRIVE, SUITE 112
MORRISVILLE / NORTH CAROLINA / 27560

PARKER RIDGE
82 SCHOOL STREET
ROLESVILLE / NORTH CAROLINA / 27571

ENLARGED TCA PLAN (4 OF 6)

NORTH CAROLINA REGISTERED LANDSCAPE ARCHITECT No.1155 ROBERT C. ZUMWALT

NOT FOR CONSTRUCTION

FILE NUMBER: 8430-03

DATE: 11/21/2023

L3-4

LEGEND

- PROPERTY / BOUNDARY LINE
- EASEMENT
- PROPOSED CURB AND GUTTER
- WETLANDS
- 50' STREAM BUFFER
- TREE PROTECTION FENCE
- LIMIT OF CONSTRUCTION
- EXISTING TREE CANOPY
- PROPOSED TREE CONSERVATION AREA
- EXISTING STREET TREE
- PRESERVED TREE
- PRESERVED TREE CLOSE TO CONSTRUCTION LIMIT (CRITICAL ROOT ZONE SHOWN)
- TREE REMOVED FROM PERIMETER BUFFER

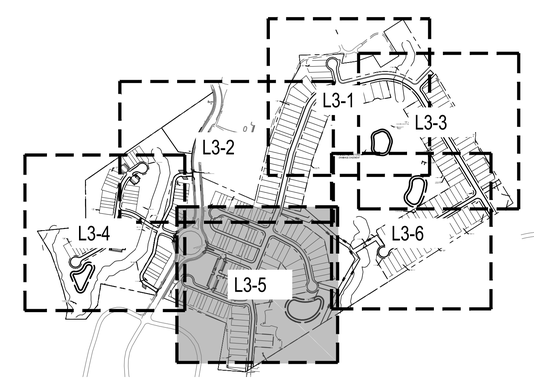

N

0 75 150 300
SCALE: 1" = 150

811
Know what's below.
Call before you dig.

REV	DATE	DESCRIPTION
1	11/21/2023	PER TOWN OF ROLESVILLE COMMENT
2	10/02/2023	PER TOWN OF ROLESVILLE COMMENT
3	08/01/2023	PER TOWN OF ROLESVILLE COMMENT
4	06/01/2023	INITIAL SUBMITTAL

DESIGNED BY: MC/RZ
DRAWN BY: MC
REVIEWED BY: RZ

BGE
5440 WADE PARK BLVD, SUITE 102
RALEIGH NC 27607
WWW.BGEINC.COM
NC LICENSE #C-4397

LENNAR CORPORTAION
1100 PERIMETER PARK DRIVE, SUITE 112
MORRISVILLE / NORTH CAROLINA / 27560

PARKER RIDGE
82 SCHOOL STREET
ROLESVILLE / NORTH CAROLINA / 27571

ENLARGED TCA PLAN (5 OF 6)

NORTH CAROLINA REGISTERED LANDSCAPE ARCHITECT No. 1155 ROBERT C. ZUMWALT

NOT FOR CONSTRUCTION

FILE NUMBER: 8430-03

DATE: 11/21/2023

L3-5

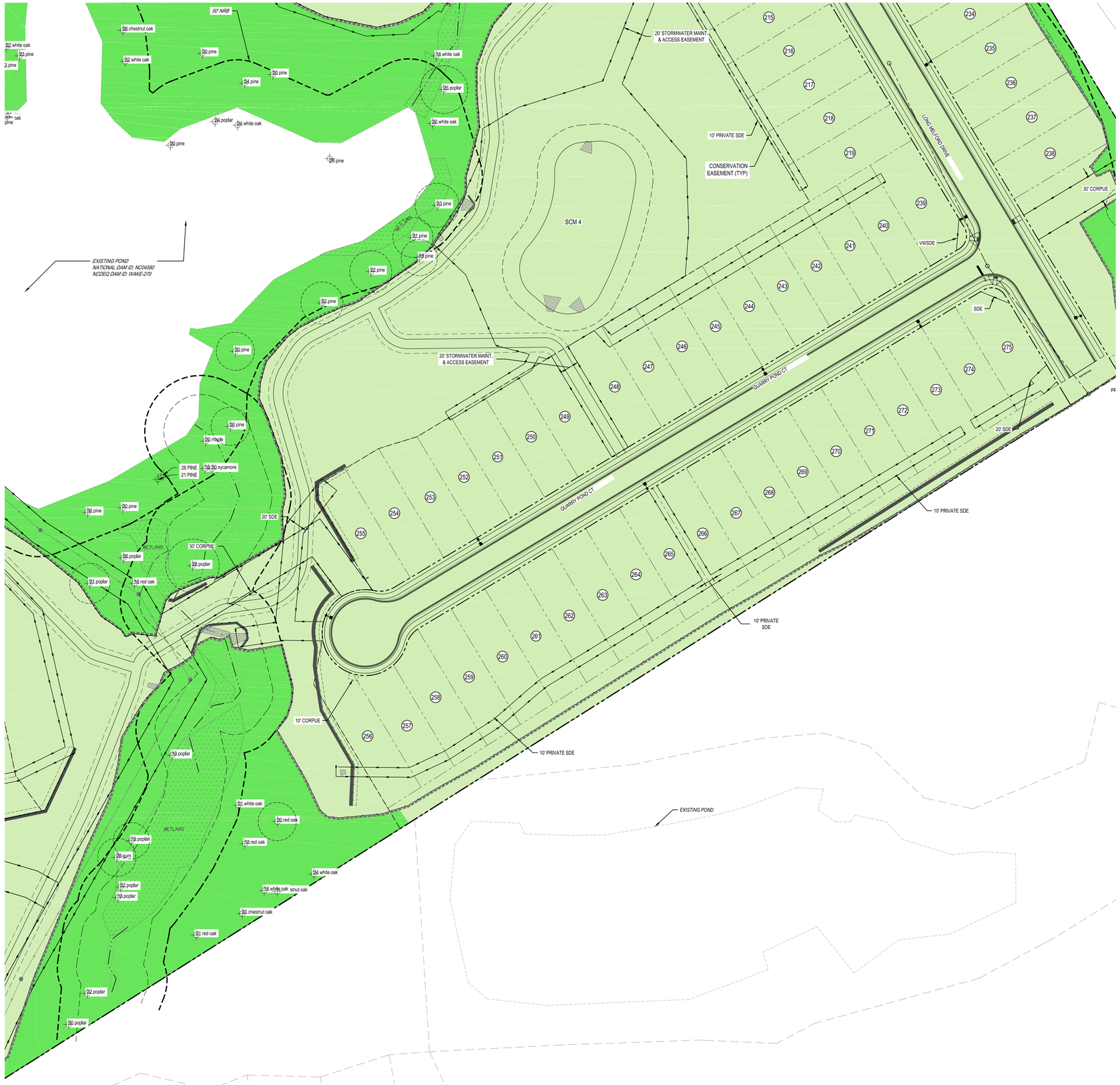

LEGEND

- PROPERTY / BOUNDARY LINE
- EASEMENT
- PROPOSED CURB AND GUTTER
- WETLANDS
- 50' STREAM BUFFER
- TREE PROTECTION FENCE
- LIMIT OF CONSTRUCTION
- EXISTING TREE CANOPY
- PROPOSED TREE CONSERVATION AREA
- EXISTING STREET TREE
- PRESERVED TREE
- PRESERVED TREE CLOSE TO CONSTRUCTION LIMIT (CRITICAL ROOT ZONE SHOWN)
- TREE REMOVED FROM PERIMETER BUFFER

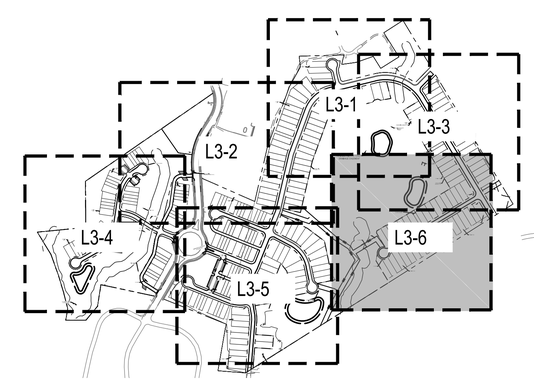

N

0 75 150 300

SCALE: 1" = 150

811 Know what's below. Call before you dig.

REV	DATE	DESCRIPTION
1	11/21/2023	PER TOWN OF ROLESVILLE COMMENT
2	10/02/2023	PER TOWN OF ROLESVILLE COMMENT
3	08/01/2023	PER TOWN OF ROLESVILLE COMMENT
4	06/01/2023	INITIAL SUBMITTAL

DESIGNED BY: MC/RZ

DRAWN BY: MC

REVIEWED BY: RZ

BGE
5440 WADE PARK BLVD, SUITE 102
RALEIGH NC 27607
WWW.BGEINC.COM
NC LICENSE #C-4397

LENNAR CORPORTAION
1100 PERIMETER PARK DRIVE, SUITE 112
MORRISVILLE / NORTH CAROLINA / 27560

PARKER RIDGE
82 SCHOOL STREET
ROLESVILLE / NORTH CAROLINA / 27571

ENLARGED TCA PLAN (6 OF 6)

NORTH CAROLINA REGISTERED LANDSCAPE ARCHITECT No.1155 ROBERT C. ZUMWALT

NOT FOR CONSTRUCTION

FILE NUMBER: 8430-03

DATE: 11/21/2023

L3-6

G:\NCA\Projects\Lennar\8430-03 - Lennar - School Street - Rolesville\03 - DWG\PlanSheets\On-Site\L3-0 - TCA PLAN.dwg Layout: L3-6 Plotted: 12/1/2023 2:06:25 PM

Schedule					
Symbol	Label	Quantity	Description	Lumens Per Lamp	Light Loss Factor
	A	49	LED 50w Roadway - Type III - 3000K - - Street	5312	0.85
	B	5	LED 50w Roadway - Type III - 3000K - - Parking	5312	0.85

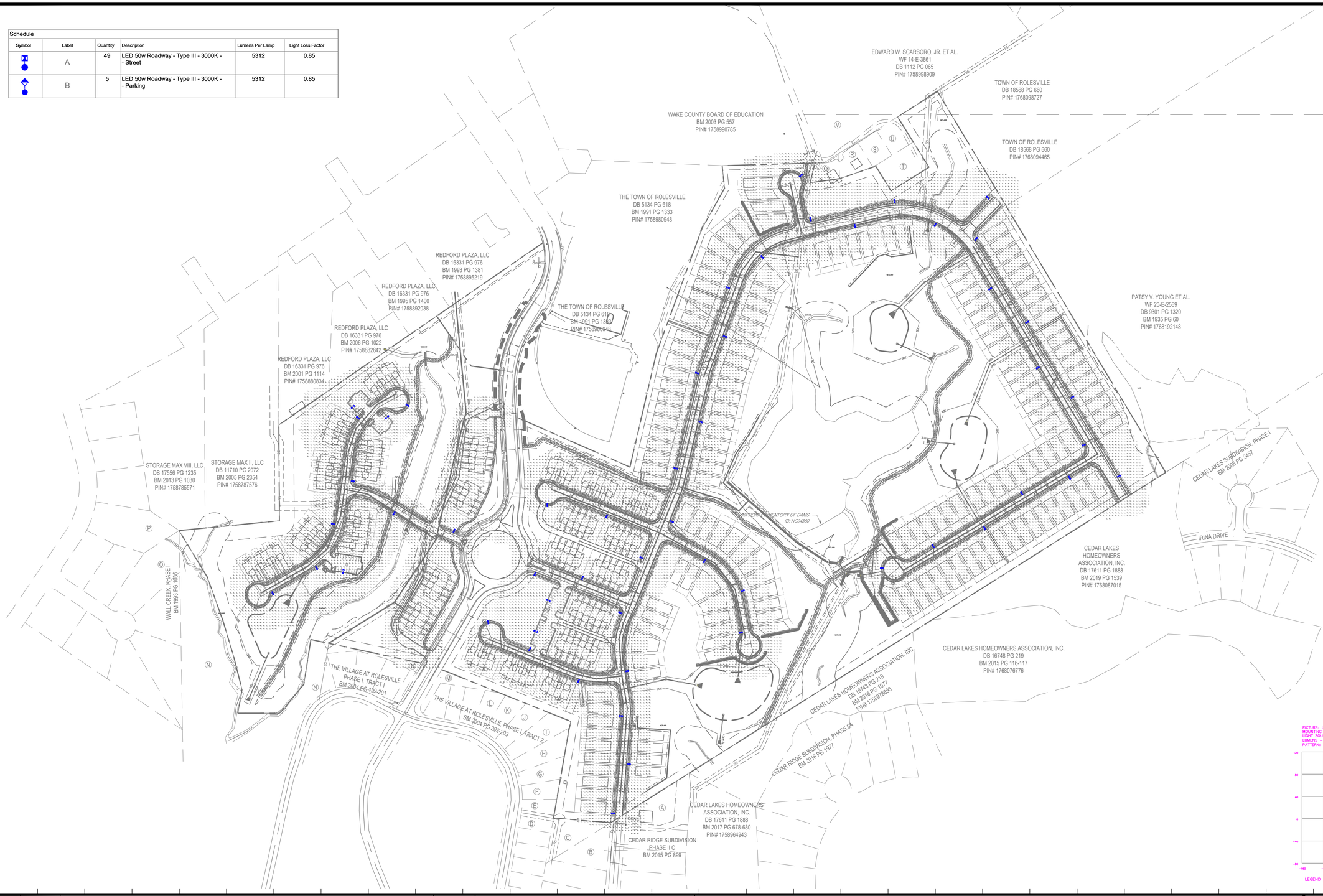

Outdoor Lighting

MICRO LED ROADWAY
(Meets Dark Sky Criteria)

LED (Light-emitting diode)	50 watts
Mounting height	20', 25', 35'
Color	Gray | Black
Pole	Fiberglass Metal Wood
Applications	Neighborhoods Parks Streets

Light source: LED (white)
Wattage: 50 watts, 70 watts
Lumens: 5,232 – 8,170
Light pattern: IESNA Type II, III, V
IESNA cutoff classification: Full-cutoff
BUG rating: Type II = B1U0G2 (50w) – B2U0G2 (70w)
Type III = B1U0G1
Type V = B3U0G1 (50w only)
Color temperature: 3,000K

light distribution patterns

POLE AVAILABLE	MOUNTING HEIGHT	COLOR
Fiberglass	25', 30', 35'	Gray, Black (additional cost)
Wood	25', 30', 35'	Standard
Metal (Special conditions)	25', 30', 35'	Galvanized

FEATURES	BENEFITS
Turnkey operation	Provides hassle-free installation and service
Little or no installation cost	Frees up capital for other projects
Design services by lighting professionals included	Meets industry standards and lighting ordinances
Maintenance, electricity & warranty included	Eliminates high and unexpected repair bills
One low monthly cost on your electric bill	Convenience and savings for you

For additional information, contact us at **OOLCarolinas@duke-energy.com.**

DUKE ENERGY. PROGRESS

ISSUING A SMARTER INSTITUTE

ISOFOOTCANDLE CURVES

FIXTURE: LED 50W ROADWAY
MOUNTING HEIGHT: 25 FT.
LIGHT SOURCE: LED, 3000K, 70 CRI
LUMENS = 5342
PATTERN: TYPE III, B1-U0-G1(zero light at or above 90 degrees)

ASD7# LTIX-RW-LED-50-BLK-III-3000K-____-F
POLE ASD7# LPOLE-DB-FG-25FT-BLK-____-P (BLACK)

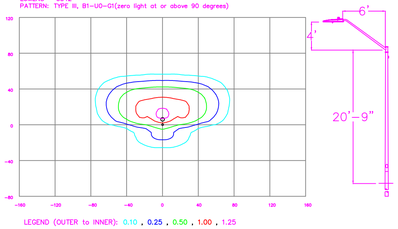

LEGEND (OUTER to INNER): 0.10 , 0.25 , 0.50 , 1.00 , 1.25

NO.	DATE	REVISION	BY

DISTANCE CALIBRATION (INCHES)
0 0.5 1.0 2.0 3.0 4.0

LIGHTING DESIGN TOLERANCE

The calculated footcandle light levels in this lighting design are predicted values and are based on specific information that has been supplied to Duke Energy. Any inaccuracies in the supplied information, differences in luminaire installation, lighted area geometry including elevation differences, reflective properties of surrounding surfaces, obstructions (foliage or otherwise) in the lighted area, or lighting from sources other than listed in this design may produce different results from the predicted values. Normal tolerances of voltage, lamp output, and ballast and luminaire manufacture will also affect results.

DUKE ENERGY. PROGRESS

PROPRIETARY & CONFIDENTIAL

PARKER RIDGE
Rolesville, NC
SITE LIGHTING ARRANGEMENT

Designed by DUKE ENERGY PROGRESS LIGHTING SOLUTIONS
Reviewed by N. Johnson Scale 1" = 150'
Date 07/18/2023 Size Drawing size "D"
Description LED Roadway
Drawing No. 23-0308A Sht. 1 OF 1

Schedule					
Symbol	Label	Quantity	Description	Lumens Per Lamp	Light Loss Factor
	A	49	LED 50w Roadway - Type III - 3000K - - Street	5312	0.85
	B	5	LED 50w Roadway - Type III - 3000K - - Parking	5312	0.85

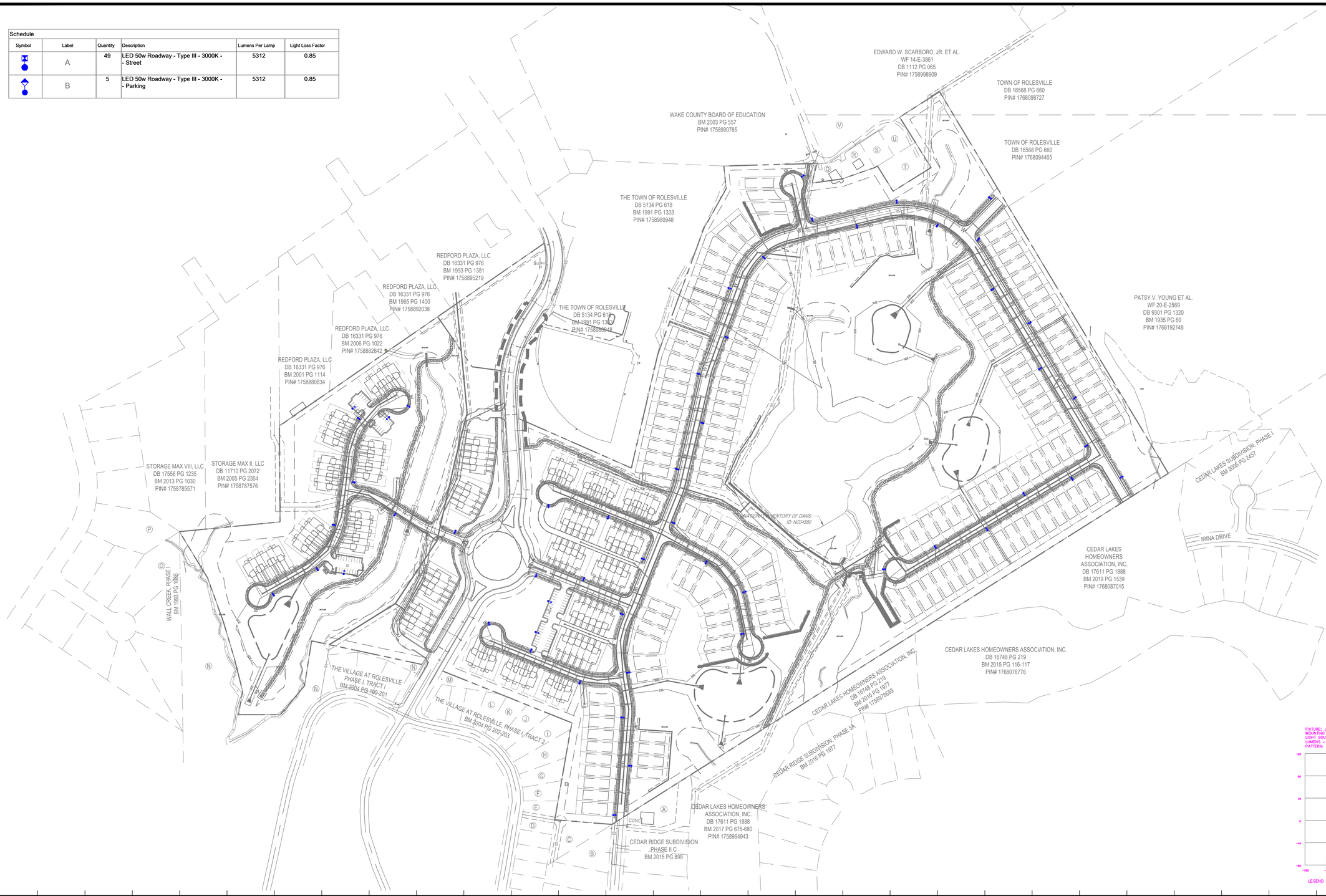

Outdoor Lighting

MICRO LED ROADWAY
(Meets Dark Sky Criteria)

LED (Light-emitting diode)	50 watts
Mounting height	20', 25', 35'
Color	Gray | Black
Pole	Fiberglass Metal Wood
Applications	Neighborhoods Parks Streets

Light source: LED (white)
Wattage: 50 watts, 70 watts
Lumens: 5,232 – 8,170
Light pattern: IESNA Type II, III, V
IESNA cutoff classification: Full-cutoff
BUG rating: Type II = B1U0G2 (50w) – B2U0G2 (70w)
Type III = B1U0G1
Type V = B3U0G1 (50w only)
Color temperature: 3,000K

light distribution patterns

POLE AVAILABLE	MOUNTING HEIGHT	COLOR
Fiberglass	25', 30', 35'	Gray, Black (additional cost)
Wood	25', 30', 35'	Standard
Metal (Special conditions)	25', 30', 35'	Galvanized

FEATURES	BENEFITS
Turnkey operation	Provides hassle-free installation and service
Little or no installation cost	Frees up capital for other projects
Design services by lighting professionals included	Meets industry standards and lighting ordinances
Maintenance, electricity & warranty included	Eliminates high and unexpected repair bills
One low monthly cost on your electric bill	Convenience and savings for you

For additional information, contact us at OGLCarolinas@duke-energy.com.

DUKE ENERGY. PROGRESS

ISSUING A DRAWING ON/OR/FOR/USE

ISOFOOTCANDLE CURVES

FIXTURE: LED 50W ROADWAY
MOUNTING HEIGHT: 25 FT
LIGHT SOURCE: LED, 3000K, 70 CRI
LUMENS = 5343
PATTERN: TYPE III, B1-U0-G1(zero light at or above 90 degrees)

ASSY# LF1X-RW-LED-50-BLK-III-3000K-____-P
POLE ASSY# LPOLE-DB-FG-25FT-BLK-____-P (BLACK)

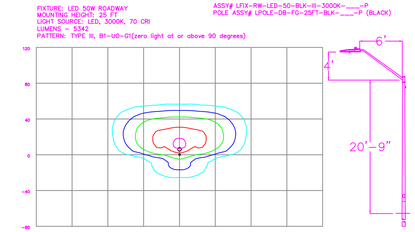

LEGEND (OUTER to INNER): 0.10 , 0.25 , 0.50 , 1.00 , 1.25

NO.	DATE	REVISION	BY

DISTANCE CALIBRATION (INCHES)
0 0.5 1.0 2.0 3.0 4.0

LIGHTING DESIGN TOLERANCE

The calculated footcandle light levels in this lighting design are predicted values and are based on specific information that has been supplied to Duke Energy. Any inaccuracies in the supplied information, differences in luminaire installation, lighted area geometry including elevation differences, reflective properties of surrounding surfaces, obstructions (foliage or otherwise) in the lighted area, or lighting from sources other than listed in this design may produce different results from the predicted values. Normal tolerances of voltage, lamp output, and ballast and luminaire manufacture will also affect results.

DUKE ENERGY® PROGRESS

PROPRIETARY & CONFIDENTIAL

PARKER RIDGE
Rolesville, NC
SITE LIGHTING ARRANGEMENT

Designed by DUKE ENERGY PROGRESS LIGHTING SOLUTIONS
Reviewed by N. Johnson Scale 1" = 150'
Date 07/18/2023 Size Drawing size "D"
Description LED Roadway
Drawing No. 23-0308A Sht. 1 OF 1